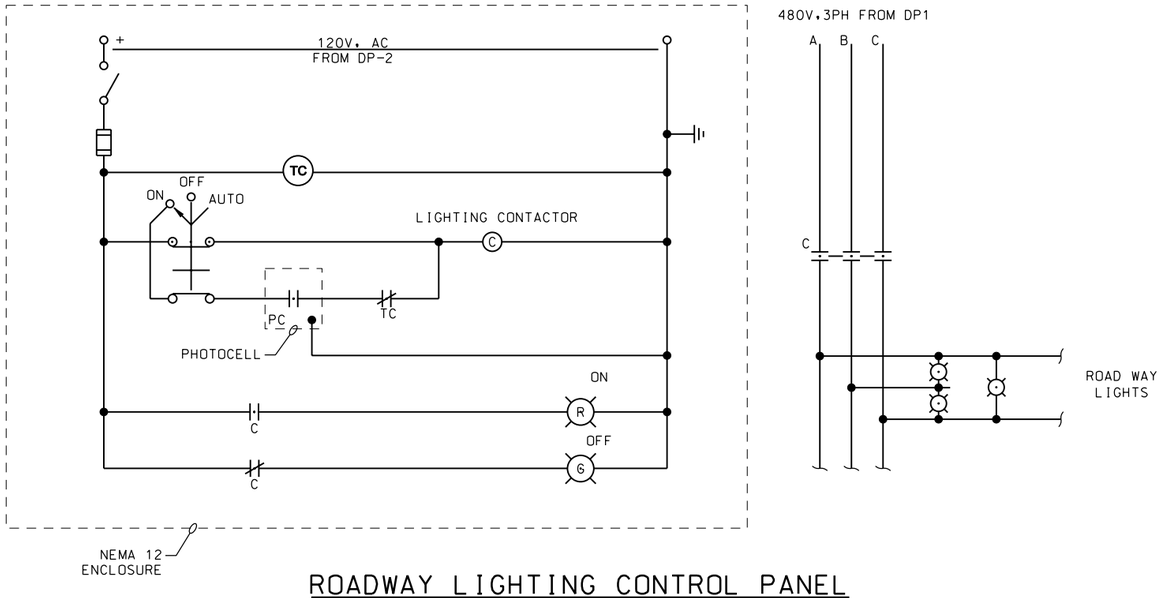

ROADWAY LIGHTING CONTROL PANEL
NTS

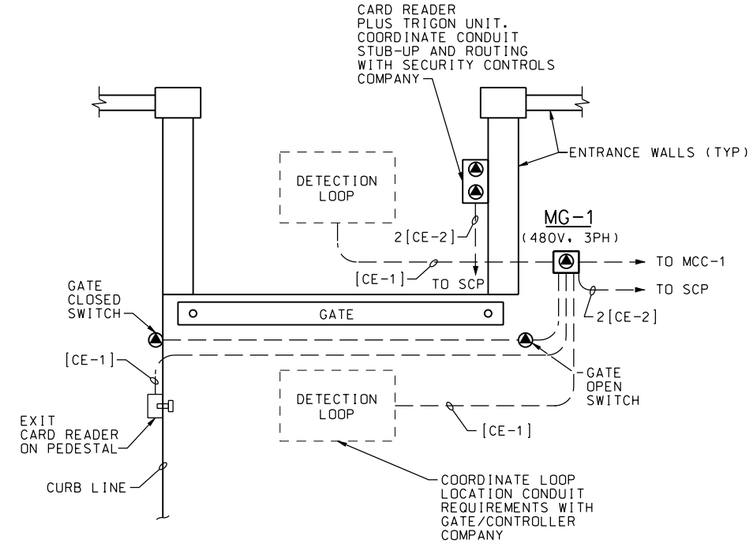

SOUTH ENTRANCE GATE CONTROL
NTS

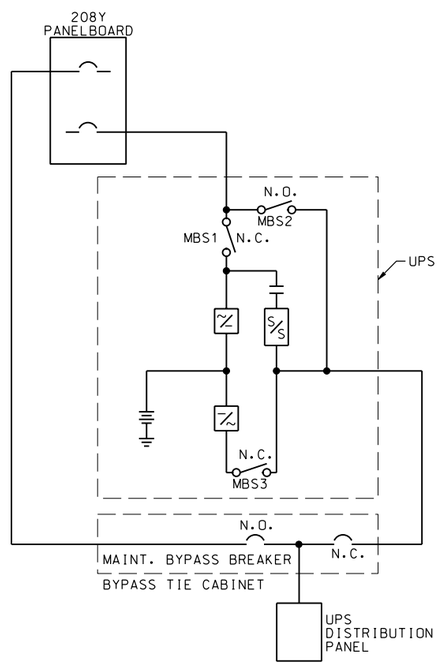

UPS SYSTEM SCHEMATIC
NTS

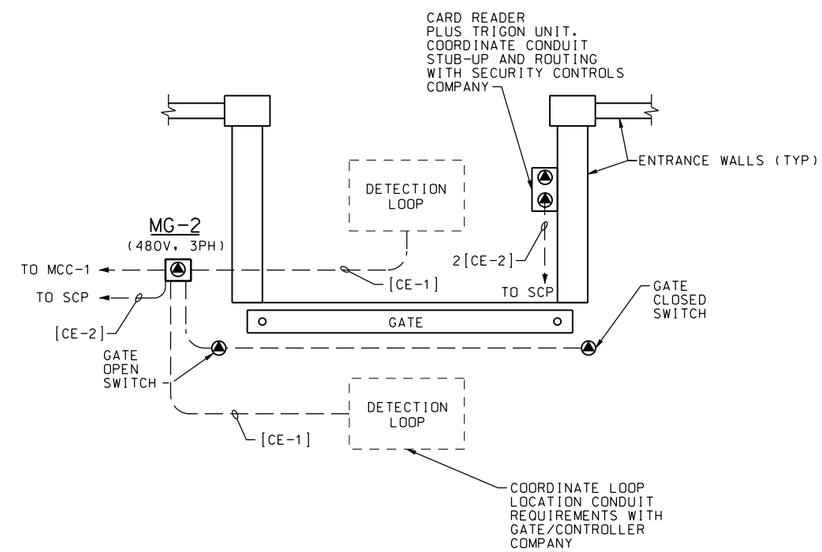

WEST ENTRANCE GATE CONTROL
NTS

REGISTERED PROFESSIONAL ENGINEER
RANDALL S. DENTON
No. 10438
Exp. 09/30/10
ELECTRICAL
STATE OF CALIFORNIA
DATE: 10/05/09

SYMBOL	DESCRIPTIONS	DATE	APPROVAL

REVISIONS

EASTERN MUNICIPAL WATER DISTRICT
PERRIS II DESALINATION FACILITY
PERRIS, CALIFORNIA

ELECTRICAL
SECTIONS AND DETAILS

U.S. ARMY ENGINEER DISTRICT
LOS ANGELES
CORPS OF ENGINEERS

DESIGNED BY: A MATHEWS
DRAWN BY: J HANNER
CHECKED BY: R DENTON

CH2MHILL

SUBMITTED BY:
ART JUNG, P.E.
CHIEF, DESIGN BRANCH

CADD FILE NAME: PDFe501d.dgn
SPEC. NO.: NOT APPLICABLE
L.A. DISTRICT FILE NO. XXX-XXXX

E-40

SHEET 185 OF 226 SHEETS

NDM-SCO:EMWD USACE PERRIS II/ PDFe501d.dgn PLOT DATE: 2/19/2010 PLOT TIME: 11:10:51 AM