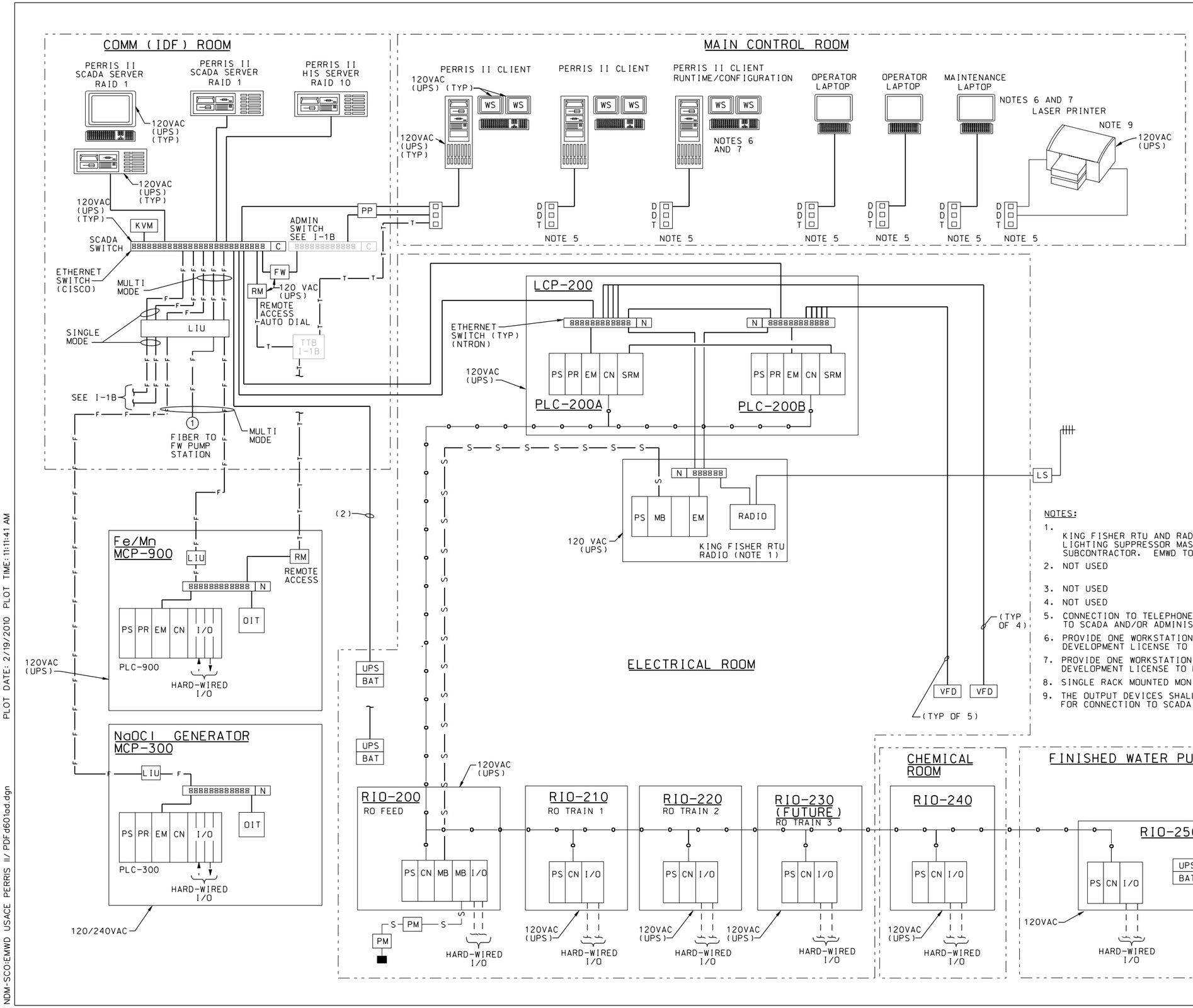

LEGEND

BAT	= BATTERY PACK
CN	= CONTROLNET MODULE
D	= DATA PORT
EM	= ETHERNET MODULE
FW	= FIREWALL
I/O	= INPUT/OUTPUT
IDF	= INTERNAL DATA FACILITY
KVM	= SWITCH TO ENABLE CONTROL OF MULTIPLE COMPUTERS FROM A SINGLE SVM STATION
LCP	= LOCAL CONTROL PANEL
LIU	= LIGHTWAVE INTERFACE UNIT (FIBER OPTIC PATCH PANEL)
LS	= LIGHTNING SUPPRESSOR
MB	= MODBUS MODULE
MCP	= MAIN CONTROL PANEL
OIT	= OPERATOR INTERFACE TERMINAL
PM	= POWER METER
PLC	= PROGRAMMABLE LOGIC CONTROLLER
PP	= PATCH PANEL
PR	= PROCESSOR
PS	= POWER SUPPLY
R	= ROUTER
RIO	= REMOTE I/O
RM	= RAS MODEM
SRM	= SYSTEM REDUNDANCY MODULE
T	= TELEPHONE PORT
UPS	= UNINTERUPTIBLE POWER SUPPLY
VFD	= VARIABLE FREQUENCY DRIVE
WS	= WORKSTATION
■	= END OF LINE RESISTOR
—o—o—	CONTROLNET CABLE
—S—S—	RS 485 CABLE
—F—F—	ETHERNET FIBER CABLE
—T—T—	TELCO CABLE
———	ETHERNET CAT 6 CABLE

NOTES:

1. KING FISHER RTU AND RADIO FURNISHED BY EMWD. ANTENNA CABLE LIGHTING SUPPRESSOR MAST AND ANTENNA BY INSTRUMENTATION SUBCONTRACTOR. EMWD TO PROGRAM AND TEST SYSTEM.
2. NOT USED
3. NOT USED
4. NOT USED
5. CONNECTION TO TELEPHONE/DATA JACK (TDJ). DATA JACKS CONNECTED TO SCADA AND/OR ADMINISTRATIVE ETHERNET SWITCHES. VIA PATCH PANEL.
6. PROVIDE ONE WORKSTATION AND ONE LAPTOP WITH A SCADA FULL DEVELOPMENT LICENSE TO DEVELOP AND MODIFY PROCESS GRAPHICS.
7. PROVIDE ONE WORKSTATION AND ONE LAPTOP WITH A CONTROLLOGIX FULL DEVELOPMENT LICENSE TO MODIFY CONTROL ALGORITHMS.
8. SINGLE RACK MOUNTED MONITOR AND KEYBOARD KVM DRAWER.
9. THE OUTPUT DEVICES SHALL BE PROVIDED WITH DUAL (2) NETWORK CARDS FOR CONNECTION TO SCADA AND ADMINISTRATION SERVERS.

SYMBOL	DESCRIPTIONS	DATE	APPROVAL

REVISIONS

EASTERN MUNICIPAL WATER DISTRICT
PERRIS II DESALINATION FACILITY
PERRIS, CALIFORNIA

SCADA BLOCK DIAGRAM 1

DESIGNED BY: J NORDAL
DRAWN BY: J LORING
CHECKED BY: W PEARSON

U.S. ARMY ENGINEER DISTRICT
LOS ANGELES
CORPS OF ENGINEERS

CADD FILE NAME: PDF d601ad.dgn

CH2MHILL

SUBMITTED BY:
ART JUNG, P.E.
CHIEF, DESIGN BRANCH

SPEC. NO.: NOT APPLICABLE

L.A. DISTRICT FILE NO. XXX-XXXX

REGISTERED PROFESSIONAL ENGINEER JERRY NORDAL No. 25085 Exp: 9-30-11 ELECTRICAL STATE OF CALIFORNIA

DATE: 10/05/09

I-1A

SHEET 189 OF 226 SHEETS

PLOT DATE: 2/19/2010 PLOT TIME: 11:11:41 AM

NDM-SCO:EMWD USACE PERRIS II/ PDF d601ad.dgn