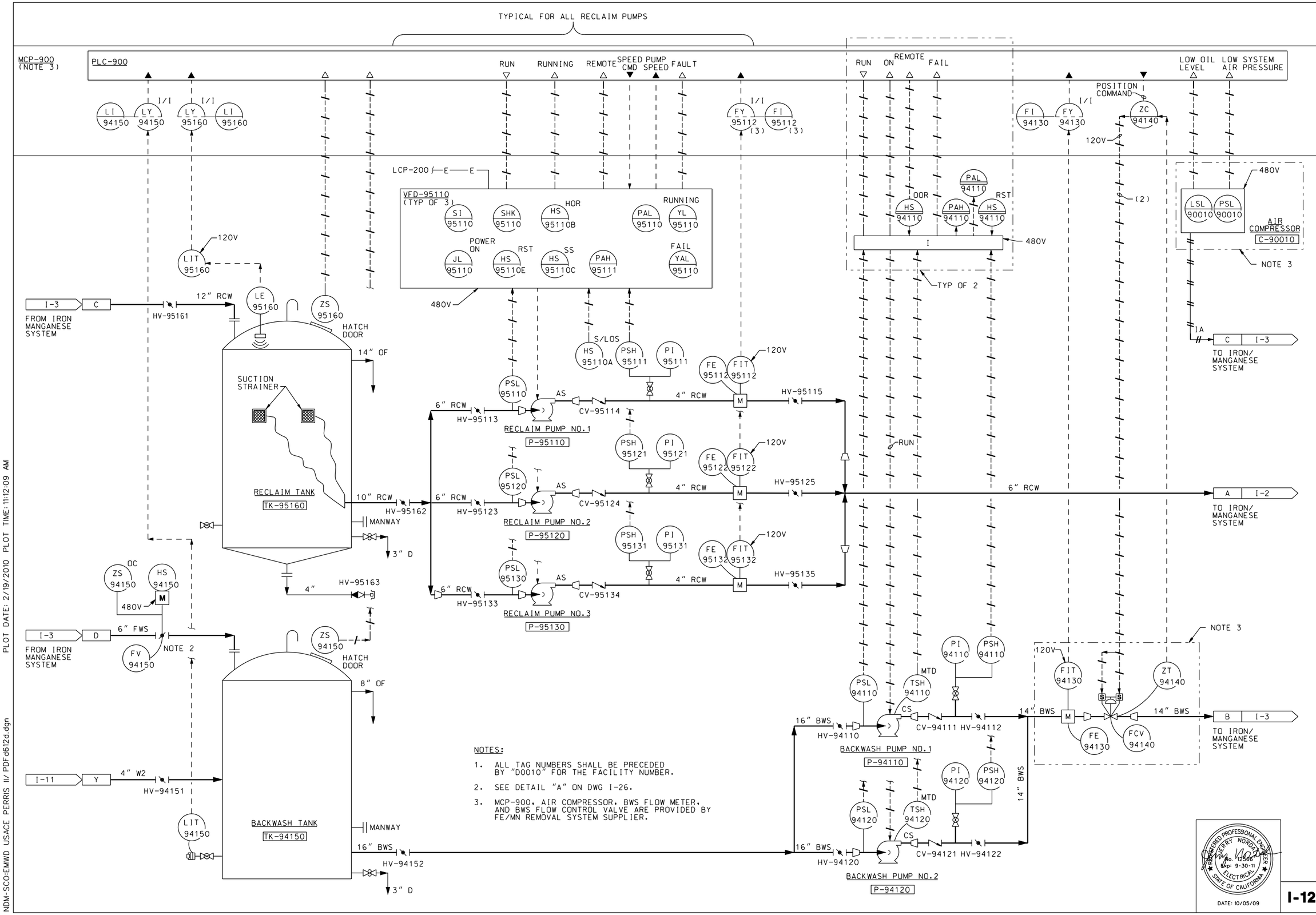

SYMBOL	DESCRIPTIONS	DATE	APPROVAL

REVISIONS

EASTERN MUNICIPAL WATER DISTRICT
PERRIS II DESALINATION FACILITY
PERRIS, CALIFORNIA

FE/MN RECLAIM AND BACKWASH SYSTEM

DESIGNED BY: J NORDAL
DRAWN BY: J LORING
CHECKED BY: W PEARSON

U.S. ARMY ENGINEER DISTRICT
LOS ANGELES
CORPS OF ENGINEERS

CH2MHILL

SUBMITTED BY:
ART JUNG, P.E.
CHIEF, DESIGN BRANCH

CADD FILE NAME: PDF d612d.dgn
SPEC. NO.: NOT APPLICABLE
L.A. DISTRICT FILE NO. XXX-XXXX

I-12

SHEET 201 OF 226 SHEETS

PLOT DATE: 2/19/2010 PLOT TIME: 11:12:09 AM
NDM-SCO:EMWD USACE PERRIS II/ PDF d612d.dgn