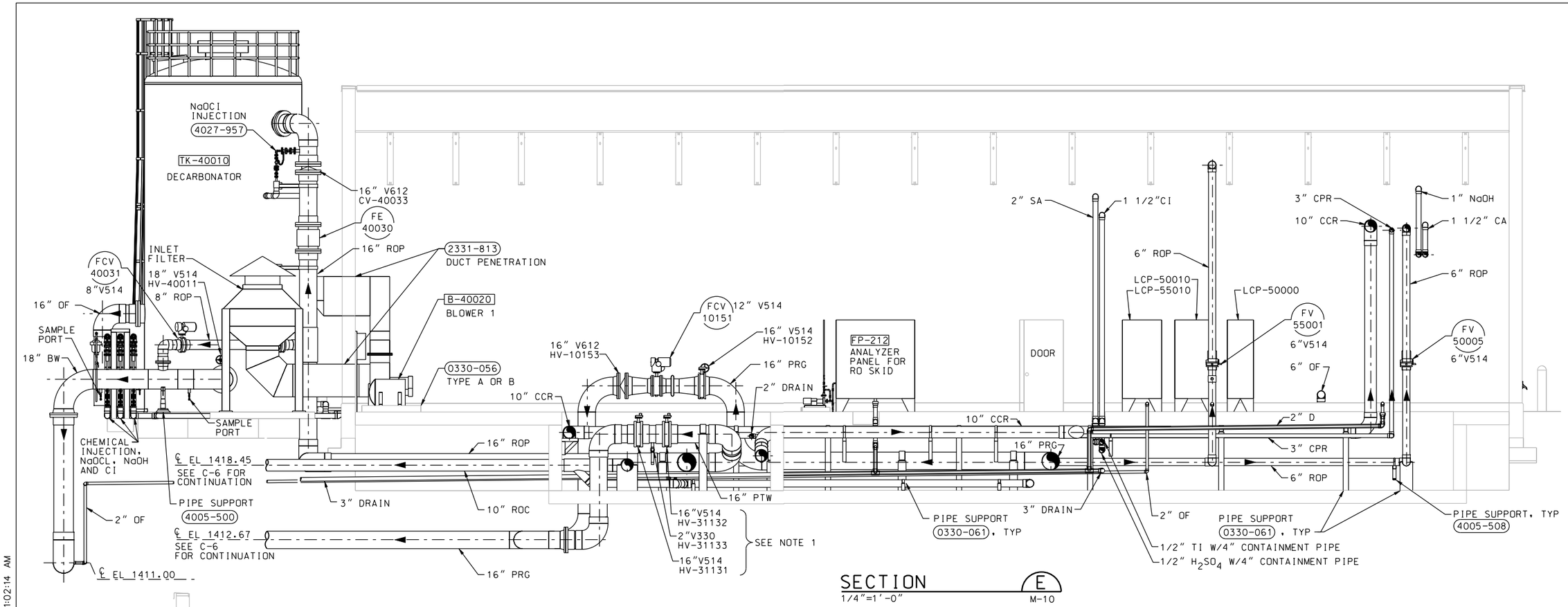

SECTION E
1/4"=1'-0" M-10

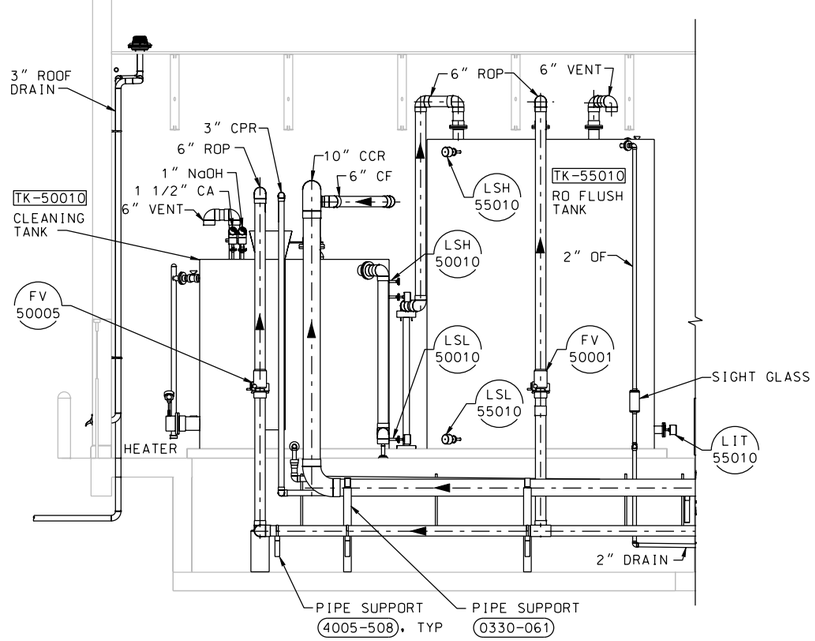

SECTION H
1/4"=1'-0" M-10

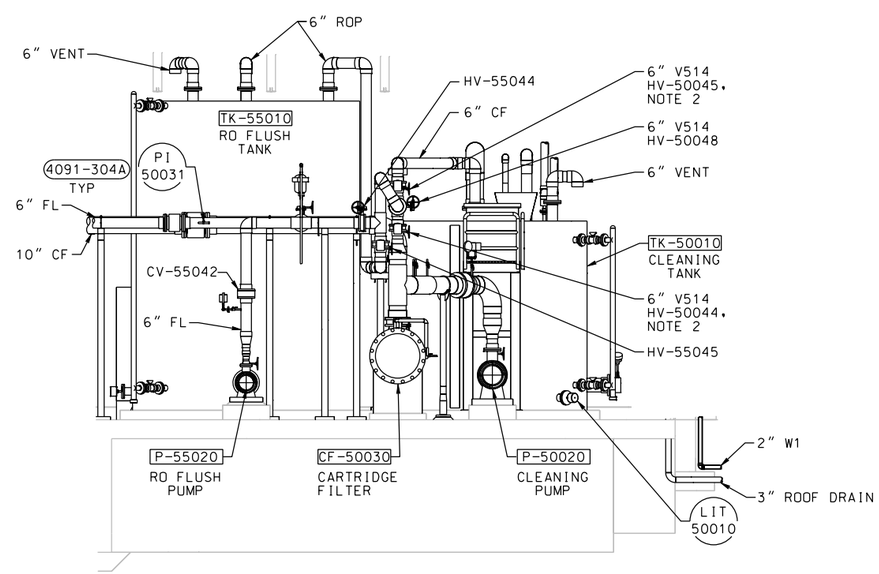

SECTION I
1/4"=1'-0" M-10

NOTES:

1. THESE VALVES TO HAVE 2" AWWA SQ NUT.

2. THE FOLLOWING VALVES TO HAVE CHAIN OPERATORS:

   HV-50044

   HV-50045

   HV-50048

   HV-55044

   HV-55045

REGISTERED PROFESSIONAL ENGINEER
DINGSHAN WANG
No. M032378
Exp. 06-30-11
MECHANICAL
STATE OF CALIFORNIA

DATE: 10/05/09

SYMBOL	DESCRIPTIONS	DATE	APPROVAL

REVISIONS

EASTERN MUNICIPAL WATER DISTRICT
PERRIS II DESALINATION FACILITY
PERRIS, CALIFORNIA

RO BUILDING AREA
SECTIONS 3

DESIGNED BY: Q WANG
DRAWN BY: J WILCOX
CHECKED BY: A NAMEY

U.S. ARMY ENGINEER DISTRICT
LOS ANGELES
CORPS OF ENGINEERS

CH2MHILL

SUBMITTED BY: ART JUNG, P.E.
CHIEF, DESIGN BRANCH

CADD FILE NAME: PDFm207d.dgn

L.A. DISTRICT FILE NO. XXX-XXXX

SPEC. NO.: NOT APPLICABLE

M-15

SHEET 101 OF 226 SHEETS

PLOT DATE: 2/19/2010 PLOT TIME: 11:02:14 AM

NDM-SCO:EMWD USACE PERRIS II/ PDFm207d.dgn