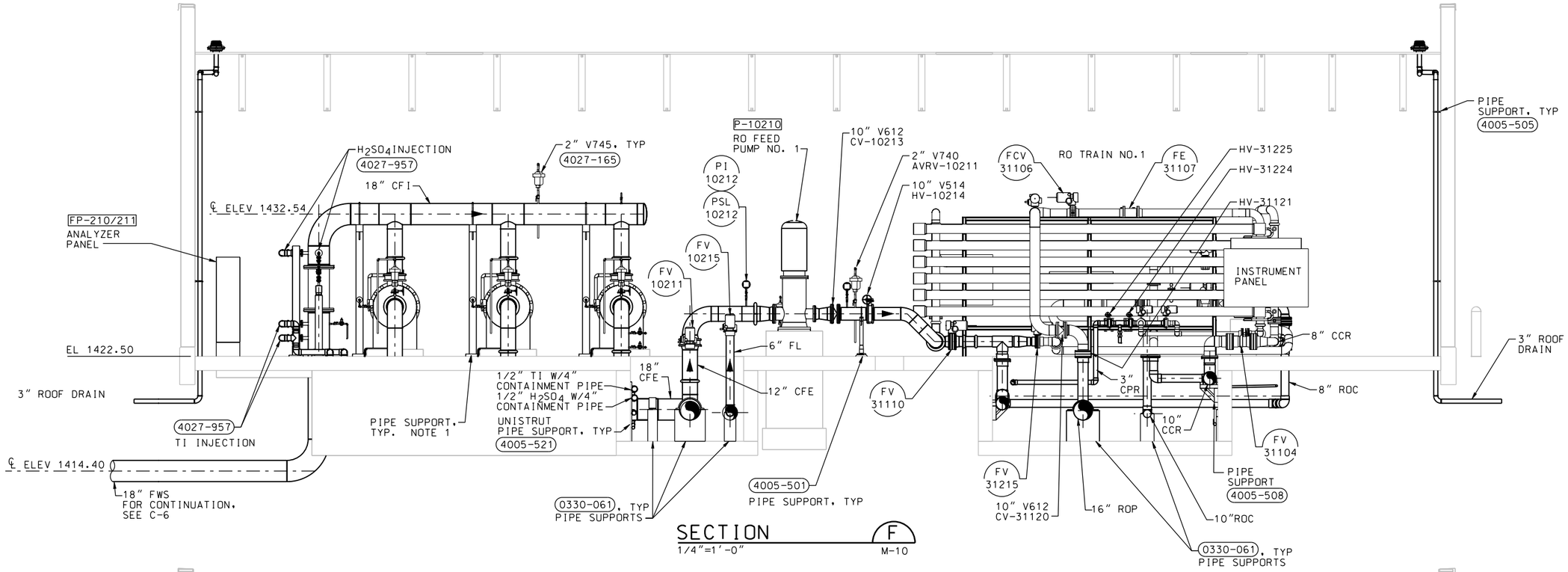

SECTION F
1/4"=1'-0"
M-10

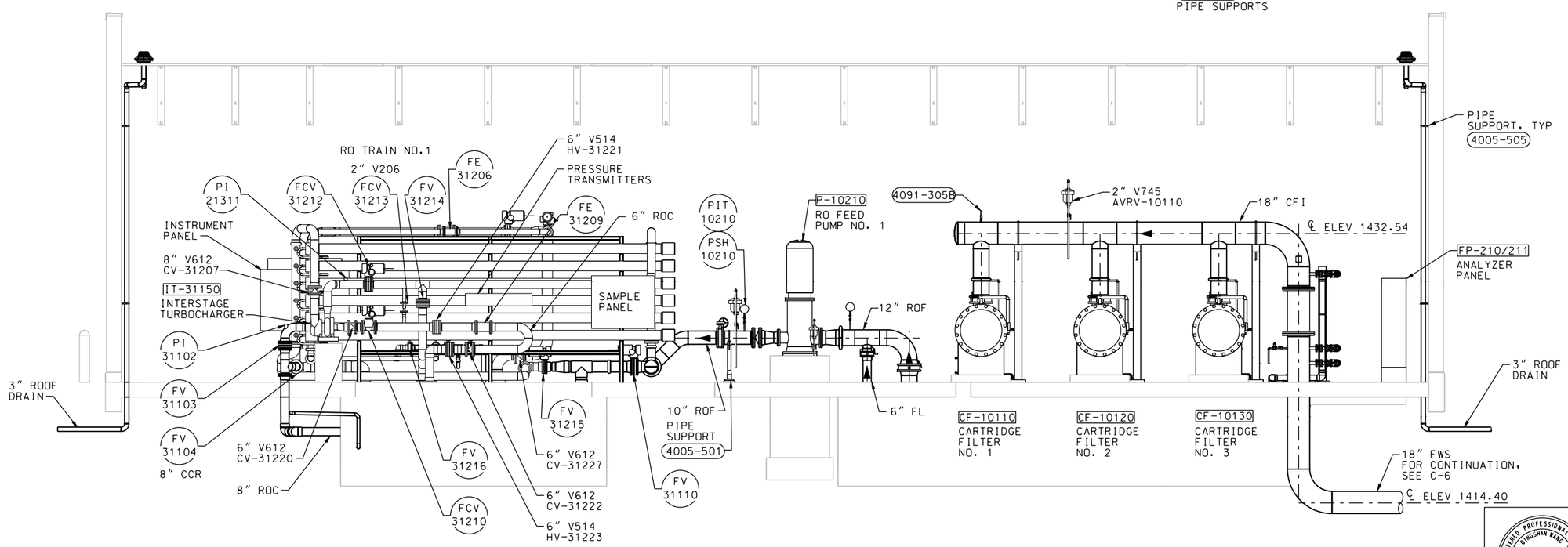

SECTION G
1/4"=1'-0"
M-10

NOTES:

1. SEE NOTE 1 ON M-14.

REGISTERED PROFESSIONAL ENGINEER
QINGSHAN WANG
No. M032378
Exp. 06-30-10
MECHANICAL
STATE OF CALIFORNIA
DATE: 10/05/09

SYMBOL	DESCRIPTIONS	DATE	APPROVAL

REVISIONS

EASTERN MUNICIPAL WATER DISTRICT
PERRIS II DESALINATION FACILITY
PERRIS, CALIFORNIA

RO BUILDING AREA
SECTIONS 4

DESIGNED BY: Q WANG
DRAWN BY: J WILCOX
CHECKED BY: A NAMEY

U.S. ARMY ENGINEER DISTRICT
LOS ANGELES
CORPS OF ENGINEERS

CH2MHILL

SUBMITTED BY:
ART JUNG, P.E.
CHIEF, DESIGN BRANCH

CADD FILE NAME: PDFm209d.dgn
SPEC. NO.: NOT APPLICABLE
L.A. DISTRICT FILE NO. XXX-XXXX

M-16

SHEET 102 OF 226 SHEETS

NDM-SCO:EMWD USACE PERRIS II/ PDFm209d.dgn PLOT DATE: 2/19/2010 PLOT TIME: 11:02:19 AM