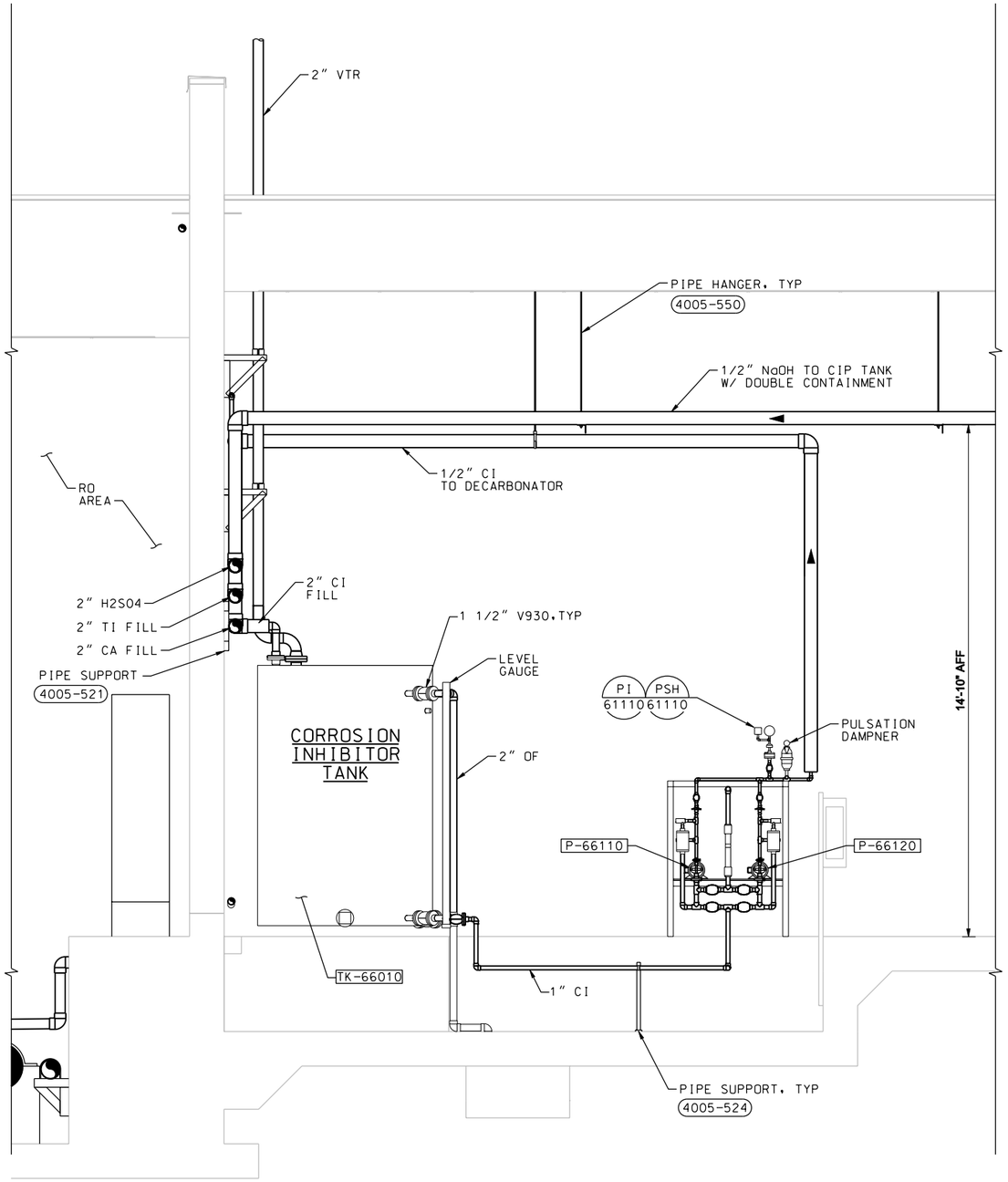

SECTION E
SCALE: 1/2" = 1'-0" M-21

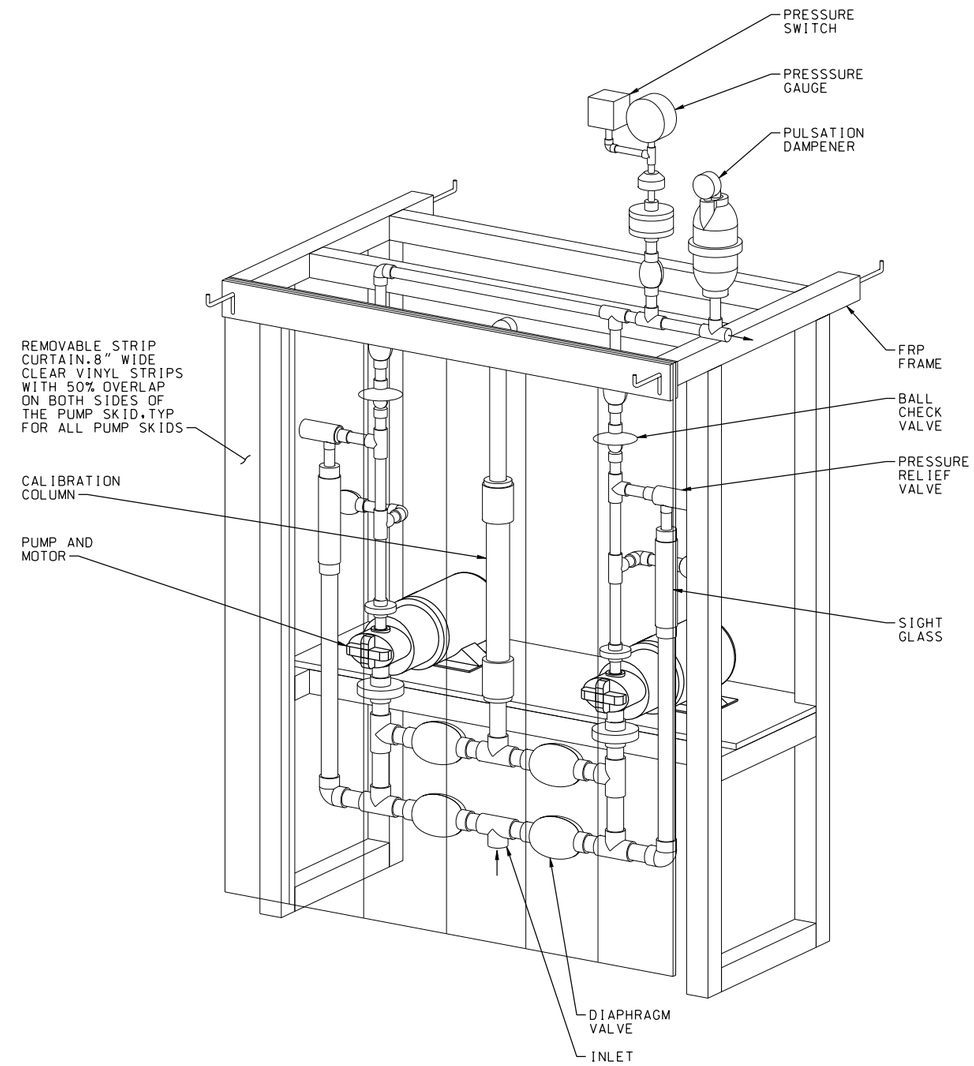

TYPICAL PUMP SKID

ISOMETRIC
NTS

SYMBOL	DESCRIPTIONS	DATE	APPROVAL

REVISIONS

EASTERN MUNICIPAL WATER DISTRICT
PERRIS II DESALINATION FACILITY
PERRIS, CALIFORNIA

CHEMICAL STORAGE AREA
SECTIONS 4

U.S. ARMY ENGINEER DISTRICT
LOS ANGELES
CORPS OF ENGINEERS

DESIGNED BY: Q WANG
DRAWN BY: J WILCOX
CHECKED BY: A NAMEY

CH2MHILL

SUBMITTED BY:
ART JUNG, P.E.
CHIEF, DESIGN BRANCH

SPEC. NO.: NOT APPLICABLE

CADD FILE NAME: PDFm312d.dgn

L.A. DISTRICT FILE NO. XXX-XXXX

REGISTERED PROFESSIONAL ENGINEER
QINGSHAN WANG
No. M032378
Exp.06-30-11
MECHANICAL
STATE OF CALIFORNIA

DATE: 10/05/09

M-27

SHEET 113 OF 226 SHEETS

PLOT DATE: 2/19/2010 PLOT TIME:11:03:17 AM

NDM-SCO:EMWD USACE PERRIS II/ PDFm312d.dgn