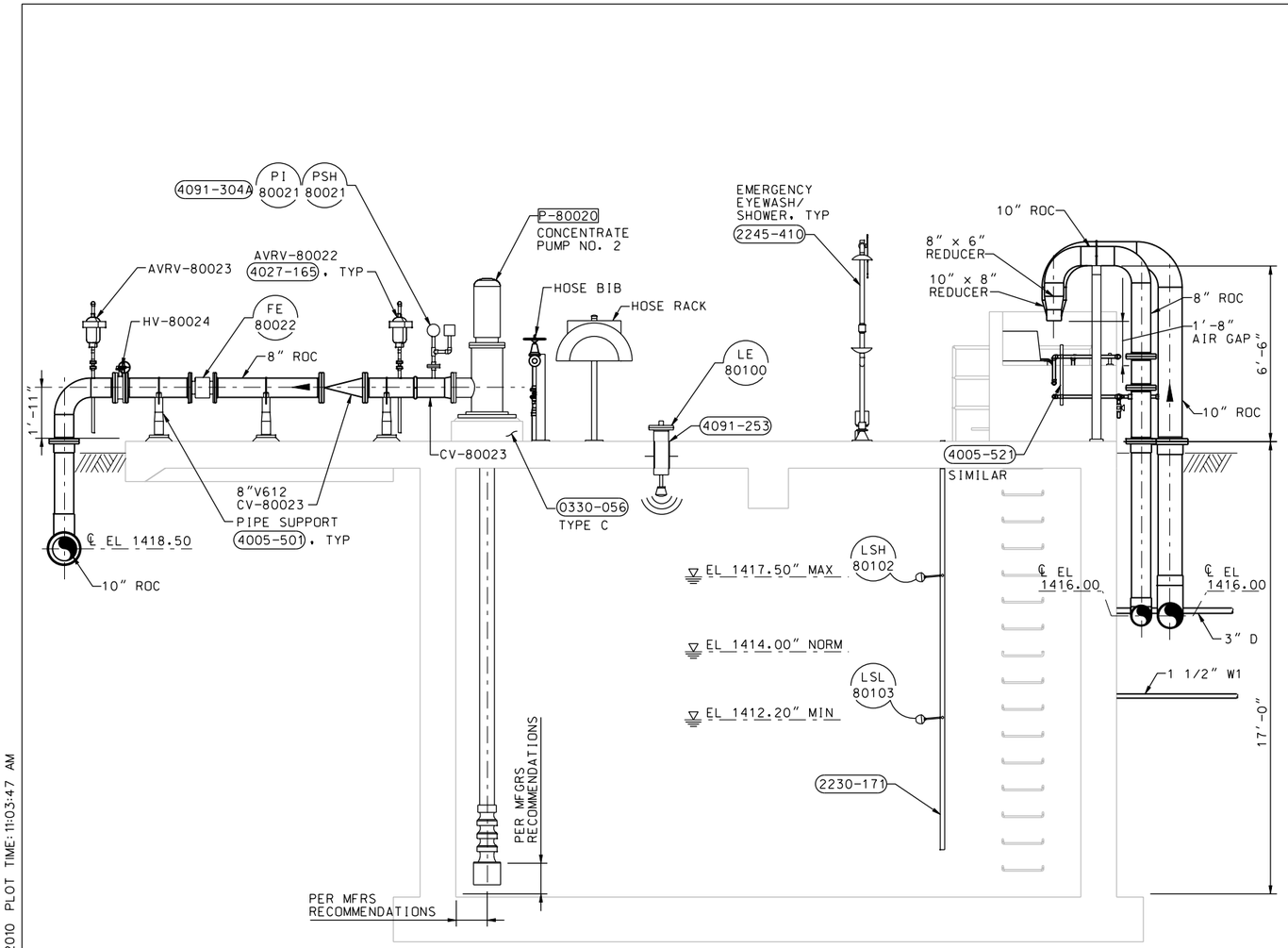


SECTION A
SCALE: 3/8" = 1'-0" M-34

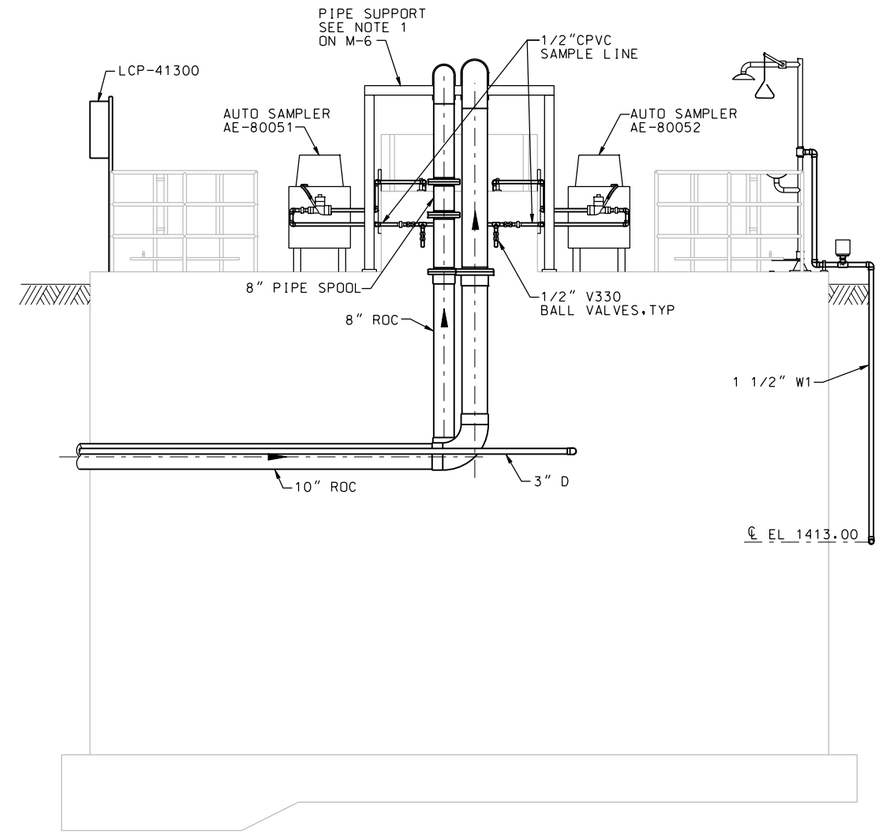


SECTION B
SCALE: 3/8" = 1'-0" M-34

| SYMBOL | DESCRIPTIONS | DATE | APPROVAL |
|---|---|---|---|
| | | | |

REVISIONS

EASTERN MUNICIPAL WATER DISTRICT
PERRIS II DESALINATION FACILITY
PERRIS, CALIFORNIA

**CONCENTRATE PUMP STATION SECTIONS**

U.S. ARMY ENGINEER DISTRICT
LOS ANGELES
CORPS OF ENGINEERS

DESIGNED BY: Q WANG
DRAWN BY: J WILCOX
CHECKED BY: A NAMEY

**CH2MHILL**

SUBMITTED BY:
ART JUNG, P.E.
CHIEF, DESIGN BRANCH

CADD FILE NAME: PDFm201d.dgn
SPEC. NO.: NOT APPLICABLE
L.A. DISTRICT FILE NO. XXX-XXXX

REGISTERED PROFESSIONAL ENGINEER
QINGSHAN WANG
No. M032378
Exp. 06-30-11
MECHANICAL
STATE OF CALIFORNIA
DATE: 10/05/09

M-35

SHEET 121 OF 226 SHEETS

NDM-SCO:EMWD USACE PERRIS II/ PDFm201d.dgn PLOT DATE: 2/19/2010 PLOT TIME: 11:03:47 AM