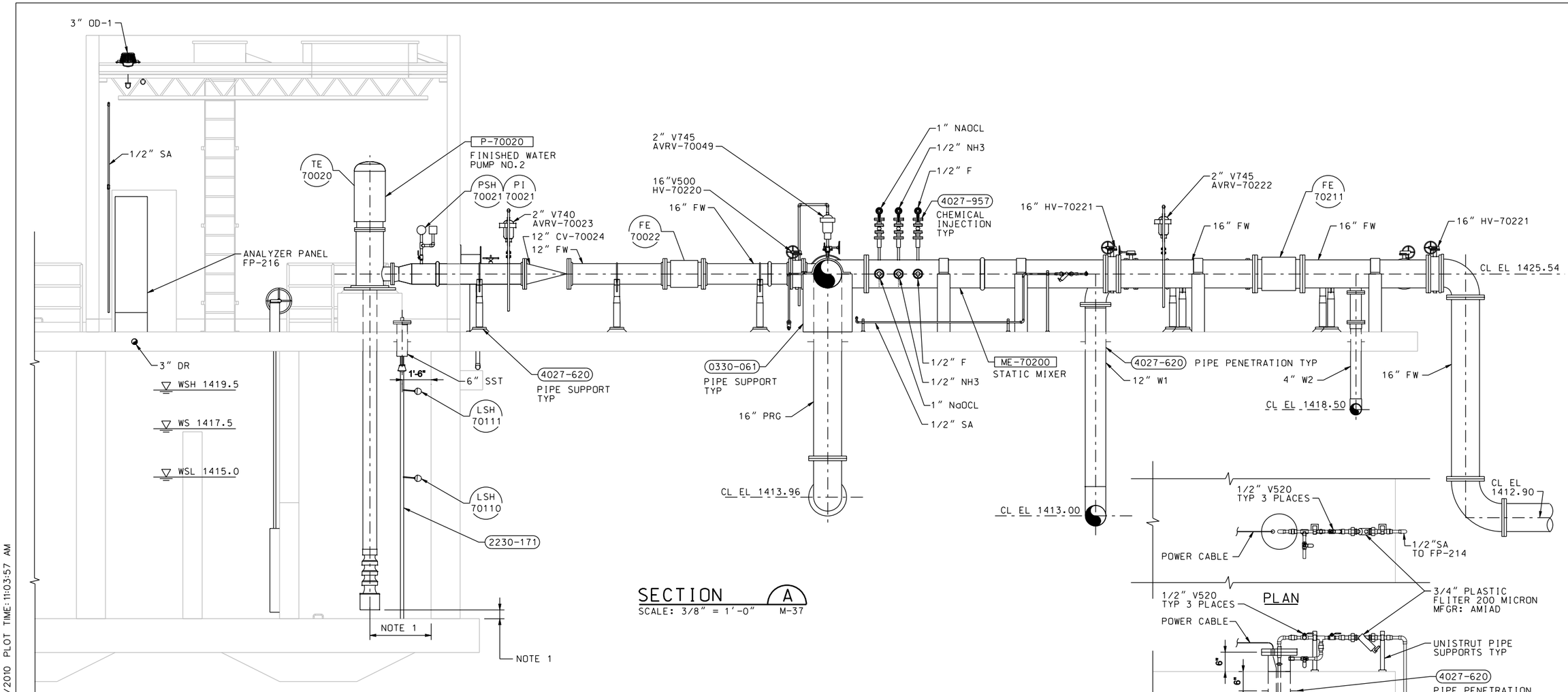

SECTION A
SCALE: 3/8" = 1'-0" M-37

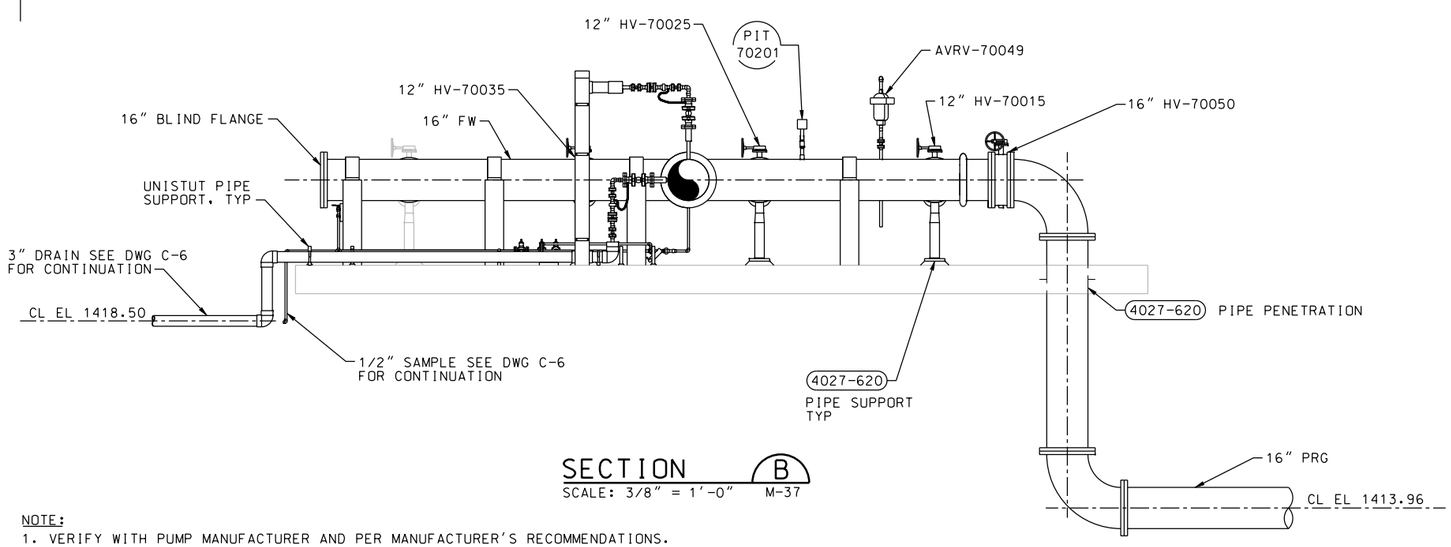

SECTION B
SCALE: 3/8" = 1'-0" M-37

NOTE:
1. VERIFY WITH PUMP MANUFACTURER AND PER MANUFACTURER'S RECOMMENDATIONS.

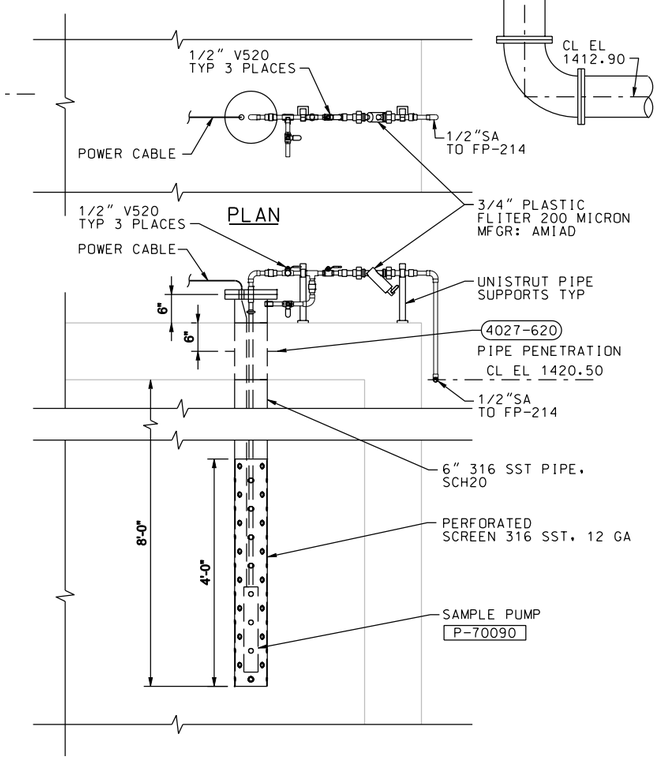

SECTION
SAMPLE PUMP DETAIL 1
SCALE: 1/2" = 1'-0" M-40

NOTES:
1. FOR PUMP LOCATION SEE DRAWING S-17.

REGISTERED PROFESSIONAL ENGINEER DINGSHAN WANG No. M032378 Exp. 06-30-11 MECHANICAL STATE OF CALIFORNIA
DATE: 10/05/09

SYMBOL	DESCRIPTIONS	DATE	APPROVAL

REVISIONS

EASTERN MUNICIPAL WATER DISTRICT
PERRIS II DESALINATION FACILITY
PERRIS, CALIFORNIA

FINISHED WATER PUMP STATION SECTIONS

DESIGNED BY: Q WANG
DRAWN BY: J WILCOX
CHECKED BY: A NAMEY

U.S. ARMY ENGINEER DISTRICT
LOS ANGELES
CORPS OF ENGINEERS

CH2MHILL

SUBMITTED BY:
ART JUNG, P.E.
CHIEF, DESIGN BRANCH

CADD FILE NAME: PDFm107d.dgn
SPEC. NO.: NOT APPLICABLE
L.A. DISTRICT FILE NO. XXX-XXXX

SHEET M-38 124 OF 226 SHEETS

PLOT DATE: 2/19/2010 PLOT TIME: 11:03:57 AM
NDM-SCO:EMWD USACE PERRIS II/ PDFm107d.dgn