NOTE:

1. CONTRACTOR DESIGNED PIPE SUPPORTS. SEE SPECIFICATION 40 05 13.
2. MOUNT PER MANUFACTURES INSTRUCTIONS. NOZZEL TO BE SST DOUBLE STRAP FITTING. TYP.

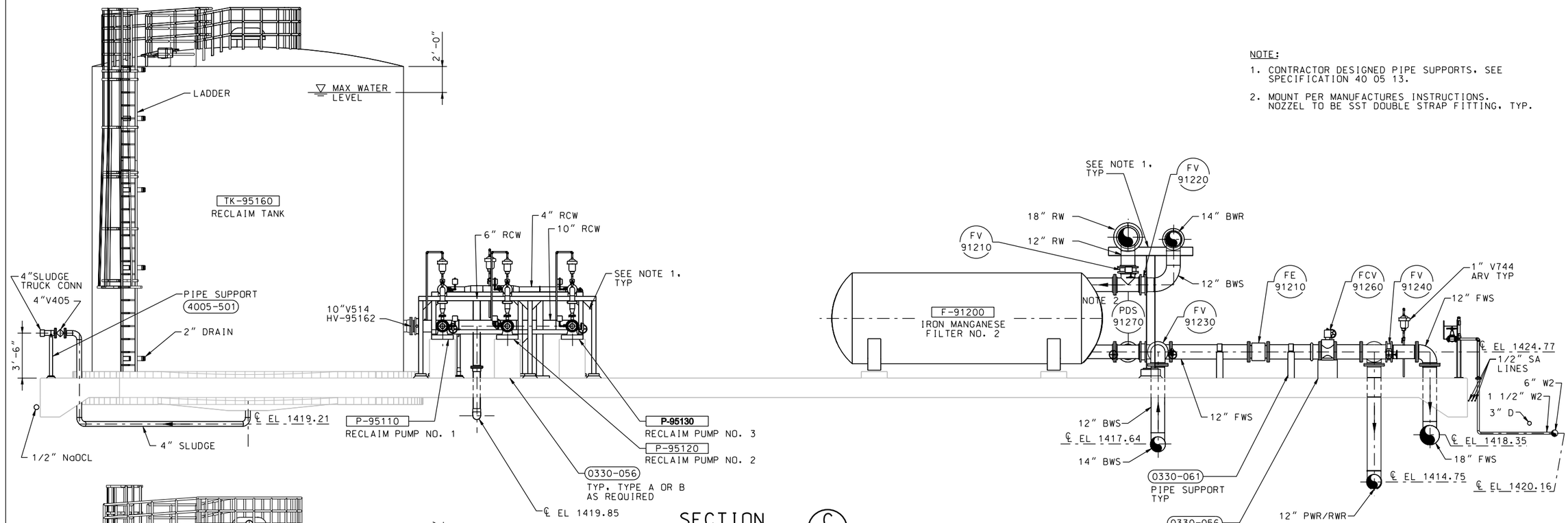

SECTION C
SCALE: 1/4" = 1"-0" M-2, M-3

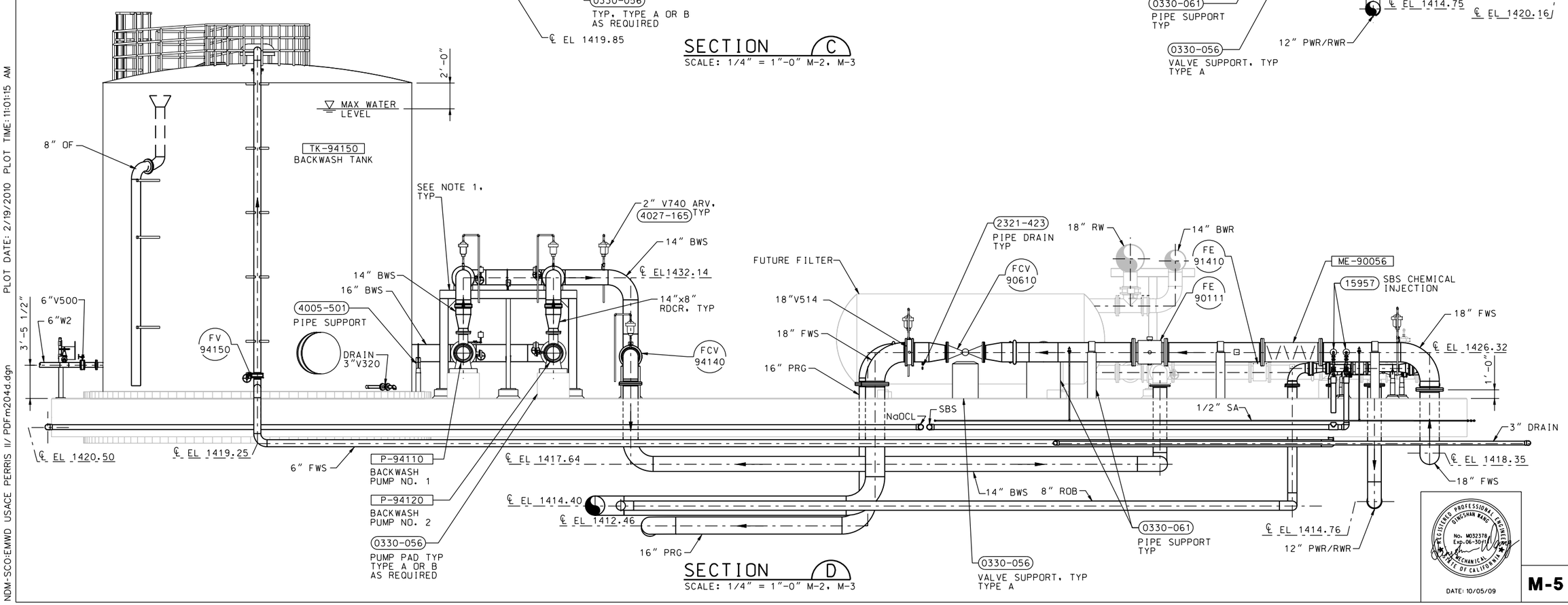

SECTION D
SCALE: 1/4" = 1"-0" M-2, M-3

REGISTERED PROFESSIONAL ENGINEER SINGSHAN WANG No. M032378 Exp. 06-30-11 MECHANICAL STATE OF CALIFORNIA

DATE: 10/05/09

SYMBOL	DESCRIPTIONS	DATE	APPROVAL

REVISIONS

EASTERN MUNICIPAL WATER DISTRICT
PERRIS II DESALINATION FACILITY
PERRIS, CALIFORNIA

FE/MN REMOVAL SYSTEM SECTIONS

DESIGNED BY: A NAMEY
DRAWN BY: J WILCOX
CHECKED BY: C QUAN

U.S. ARMY ENGINEER DISTRICT
LOS ANGELES
CORPS OF ENGINEERS

CH2MHILL

SUBMITTED BY:
ART JUNG, P.E.
CHIEF, DESIGN BRANCH

CADD FILE NAME: PDFm204d.dgn
SPEC. NO.: NOT APPLICABLE
L.A. DISTRICT FILE NO. XXX-XXXX

M-5

SHEET 91 OF 226 SHEETS

NDM-SCO:EMWD USACE PERRIS II/ PDFm204d.dgn PLOT DATE: 2/19/2010 PLOT TIME: 11:01:15 AM