NOTE:

1. CONTRACTOR DESIGNED PIPE SUPPORT, SEE SPECIFICATIONS 40 05 13.

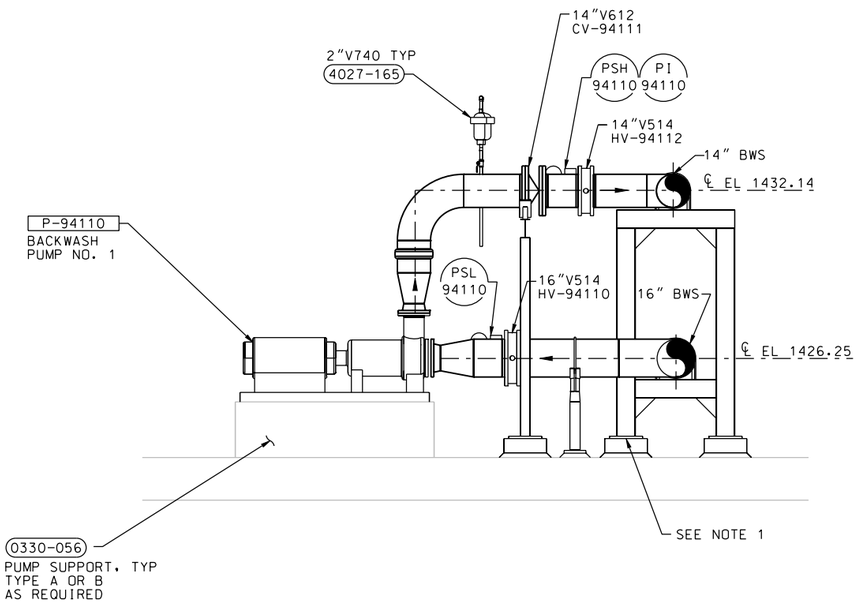

SECTION G
3/8" = 1'-0" M-2

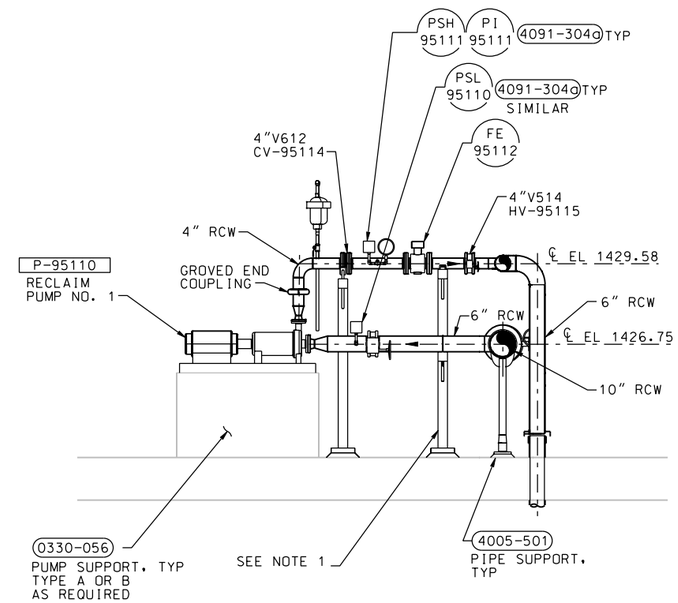

SECTION H
3/8" = 1'-0" M-2

SYMBOL	DESCRIPTIONS	DATE	APPROVAL

REVISIONS

EASTERN MUNICIPAL WATER DISTRICT
PERRIS II DESALINATION FACILITY
PERRIS, CALIFORNIA

FE/MN REMOVAL SYSTEM SECTIONS

DESIGNED BY: A NAMEY
DRAWN BY: J WILCOX
CHECKED BY: C QUAN

U.S. ARMY ENGINEER DISTRICT
LOS ANGELES
CORPS OF ENGINEERS

CH2MHILL

SUBMITTED BY:
ART JUNG, P.E.
CHIEF, DESIGN BRANCH

CADD FILE NAME: PDFm208d.dgn
SPEC. NO.: NOT APPLICABLE
L.A. DISTRICT FILE NO. XXX-XXXX

REGISTERED PROFESSIONAL ENGINEER
SINGSHAN WANG
No. M032378
Exp. 06-30-11
MECHANICAL
STATE OF CALIFORNIA
DATE: 10/05/09

M-7

SHEET 93 OF 226 SHEETS

NDM-SCO:EMWD USACE PERRIS II/ PDFm208d.dgn PLOT DATE: 2/19/2010 PLOT TIME: 11:01:24 AM