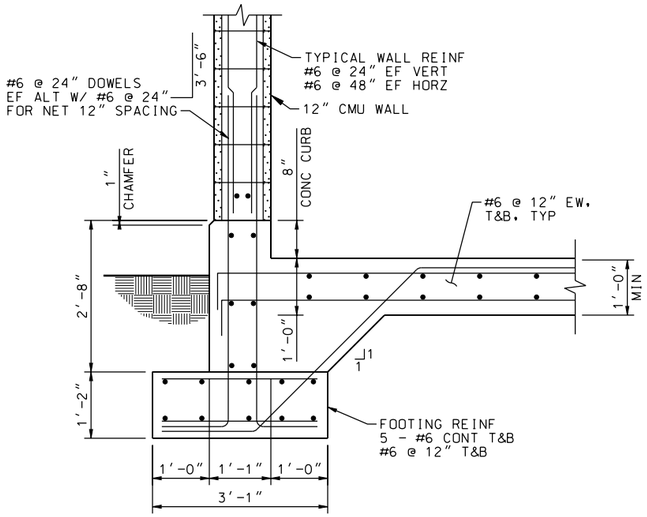

SECTION A
3/4"=1'-0" S-2,S-3,S-4,S-5

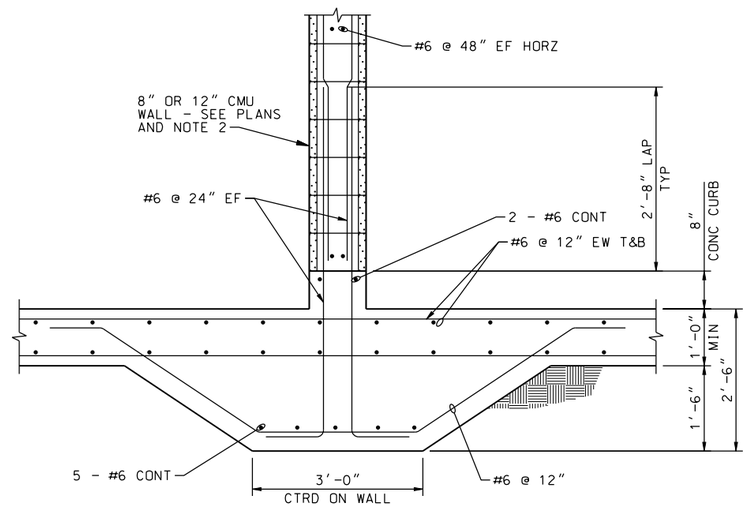

SECTION B
3/4"=1'-0" S-2,S-3,S-4

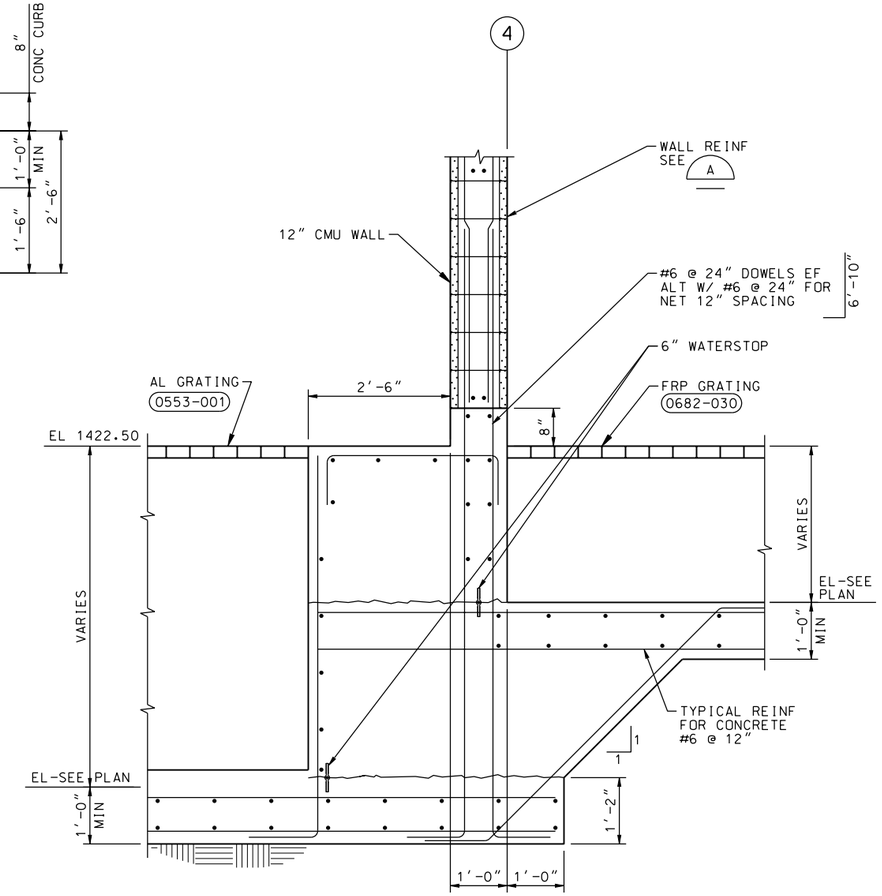

SECTION C
3/4"=1'-0" S-3,S-4,S-5

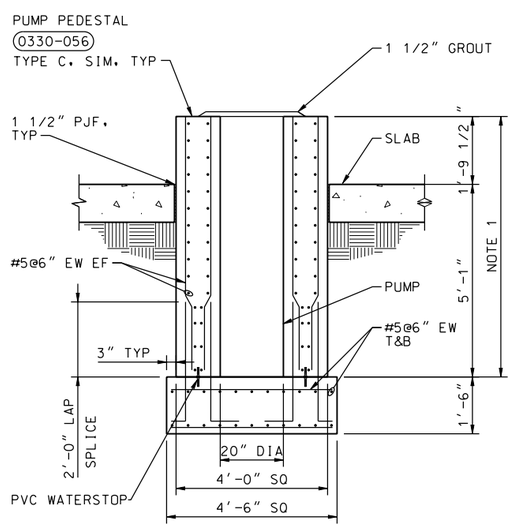

NOTE:

1. CONTRACTOR TO COORDINATE WITH PUMP MANUFACTURER.

DETAIL 1
3/4"=1'-0" S-8

NOTES:

1. FOR CMU WALL SECTIONS LESS THAN OR EQUAL TO 6'-0" IN WIDTH BTWN OPENINGS, SEE DETAILS 0422-005 AND 0422-006.
2. FOR 8" CMU WALLS USE ONE MAT OF REBAR CENTERED.
3. SEE SECTION A FOR TYPICAL CMU WALL REINFORCING.

REGISTERED PROFESSIONAL ENGINEER THOMAS E. PAIGE No. C65724 Exp. 09-30-11 CIVIL STATE OF CALIFORNIA
DATE: 10/05/09

SYMBOL	DESCRIPTIONS	DATE	APPROVAL

REVISIONS

EASTERN MUNICIPAL WATER DISTRICT
PERRIS II DESALINATION FACILITY
PERRIS, CALIFORNIA

FOUNDATION SECTION AND DETAILS

U.S. ARMY ENGINEER DISTRICT
LOS ANGELES
CORPS OF ENGINEERS

DESIGNED BY: T PAIGE
DRAWN BY: A VARGAS
CHECKED BY: M GOODSON

CH2MHILL

SUBMITTED BY: ART JUNG, P.E.
CHIEF, DESIGN BRANCH

CADD FILE NAME: PDFs302d.dgn

SPEC. NO.: NOT APPLICABLE

L.A. DISTRICT FILE NO. XXX-XXXX

S-8

SHEET 69 OF 226 SHEETS

PLOT DATE: 2/19/2010 PLOT TIME: 10:58:49 AM

NDM-SCO:EMWD USACE PERRIS II/ PDFs302d.dgn