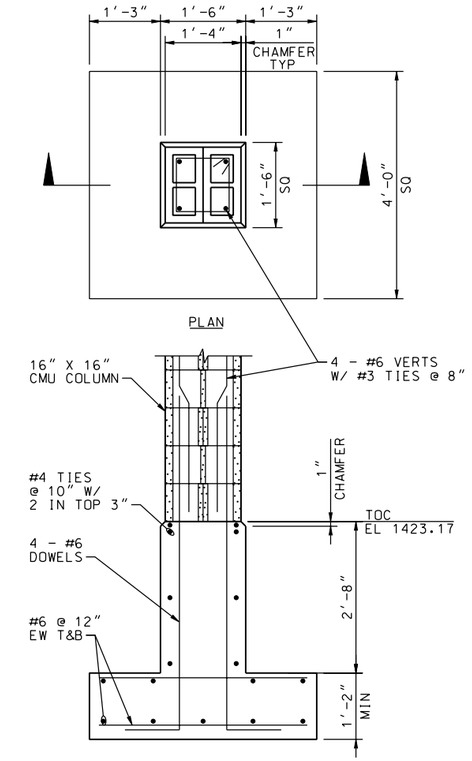

COLUMN FOOTING DETAIL (1)
3/4"=1'-0" S-2

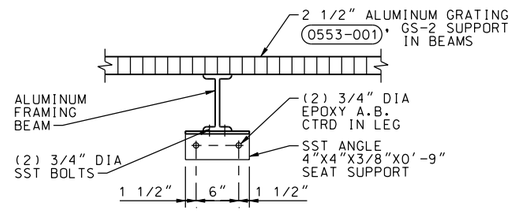

DETAIL (2)
NTS S-4

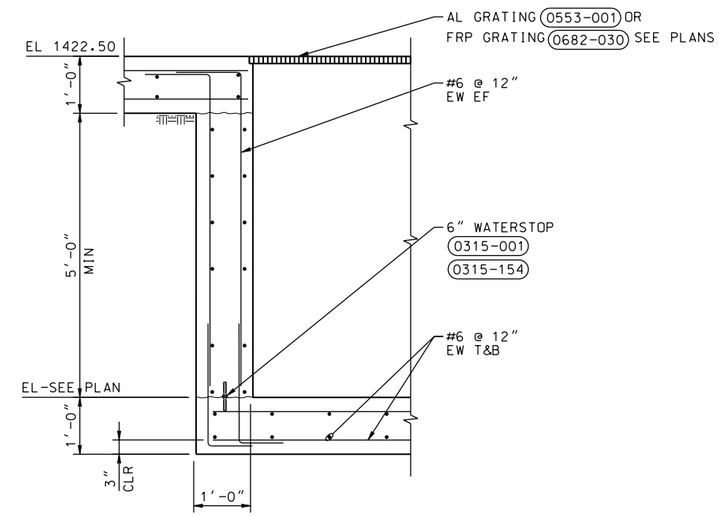

SECTION (F)
3/4"=1'-0" S-3,S-4,S-5

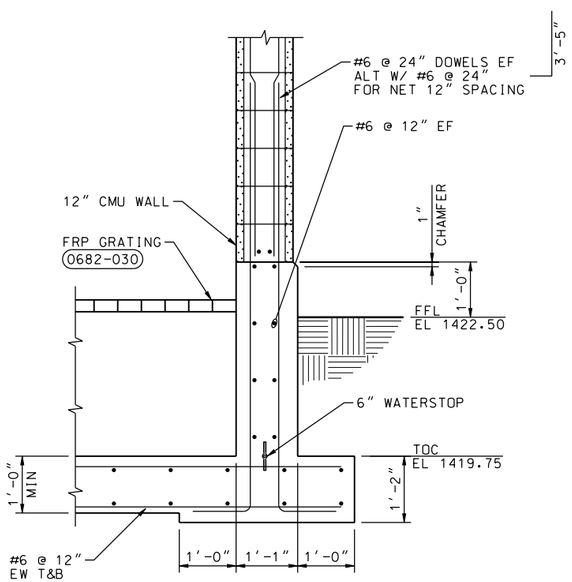

SECTION (D)
3/4"=1'-0" S-3,S-5

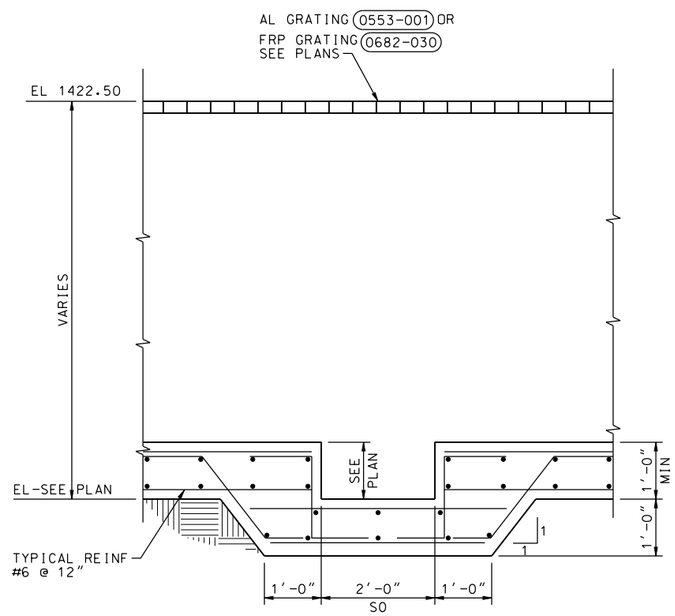

SECTION (E)
3/4"=1'-0" S-3,S-4,S-5

SYMBOL	DESCRIPTIONS	DATE	APPROVAL

REVISIONS

EASTERN MUNICIPAL WATER DISTRICT
PERRIS II DESALINATION FACILITY
PERRIS, CALIFORNIA

FOUNDATION SECTION AND DETAILS

DESIGNED BY: T PAGE
DRAWN BY: A VARGAS
CHECKED BY: M GOODSON

U.S. ARMY ENGINEER DISTRICT
LOS ANGELES
CORPS OF ENGINEERS

CH2MHILL

SUBMITTED BY: ART JUNG, P.E.
CHIEF, DESIGN BRANCH

CADD FILE NAME: PDFs303d.dgn
SPEC. NO.: NOT APPLICABLE
L.A. DISTRICT FILE NO. XXX-XXXX

REGISTERED PROFESSIONAL ENGINEER
THOMAS E. PETGE
No. C65724
Exp. 09-30-11
CIVIL
STATE OF CALIFORNIA
DATE: 10/05/09

S-9

SHEET 70 OF 226 SHEETS

PLOT DATE: 2/19/2010 PLOT TIME: 10:58:53 AM
NDM-SCO:EMWD USACE PERRIS II/ PDFs303d.dgn