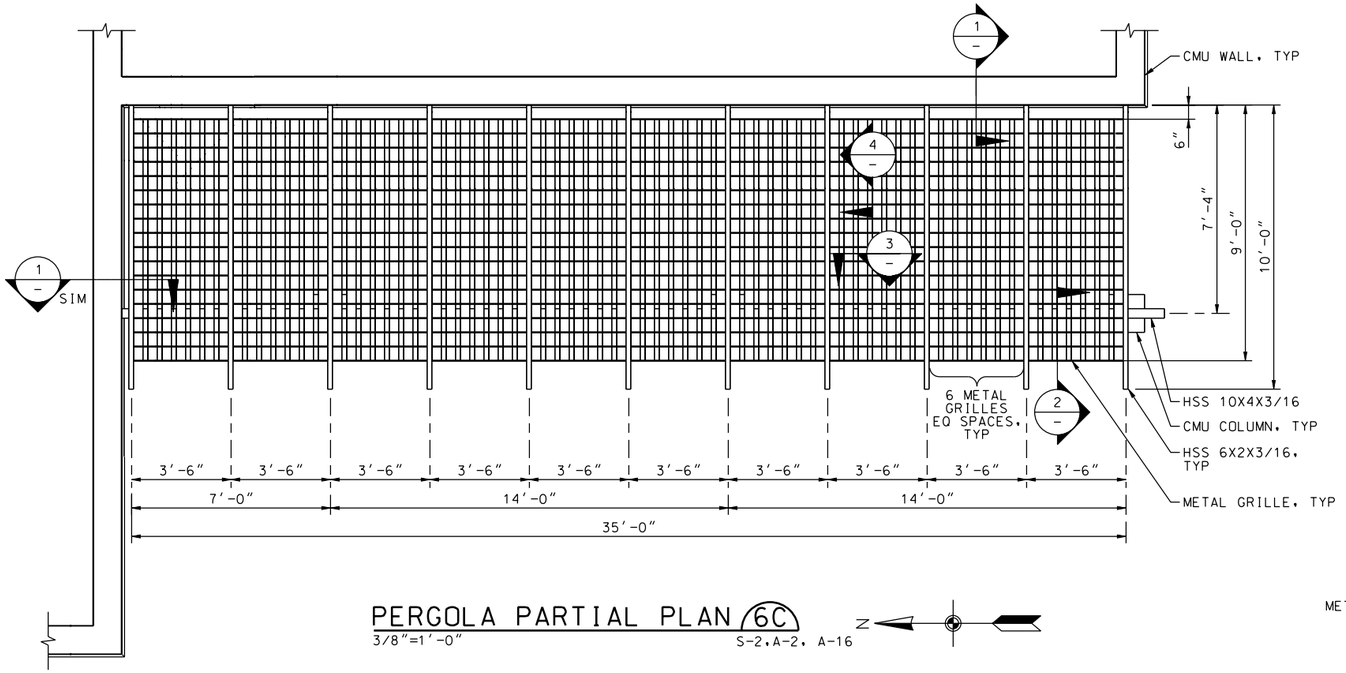

PERGOLA PARTIAL PLAN (6C)
3/8"=1'-0" S-2, A-2, A-16

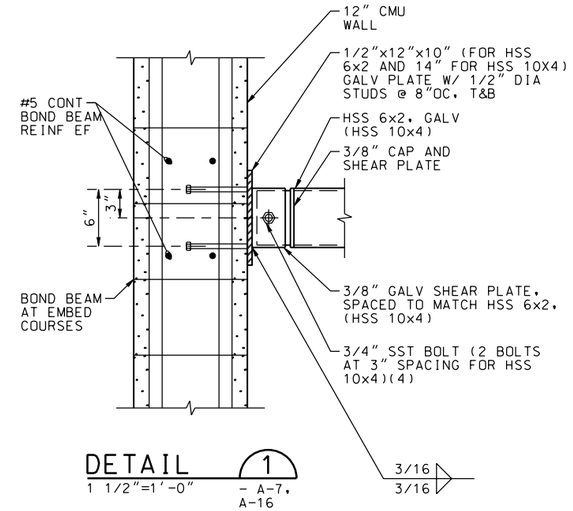

DETAIL (1)
1 1/2"=1'-0" - A-7, A-16

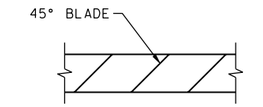

DETAIL (3)
1 1/2"=1'-0" -

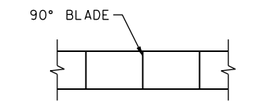

DETAIL (4)
1 1/2"=1'-0" -

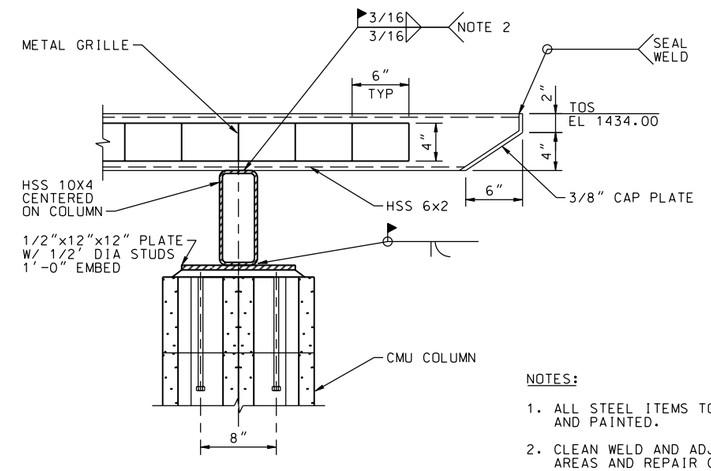

NOTES:

1. ALL STEEL ITEMS TO BE GALVANIZED AND PAINTED.
2. CLEAN WELD AND ADJACENT SURFACE AREAS AND REPAIR GALVANIZING PRIOR TO PAINTING.

DETAIL (2)
1 1/2"=1'-0" - A-7, A-16

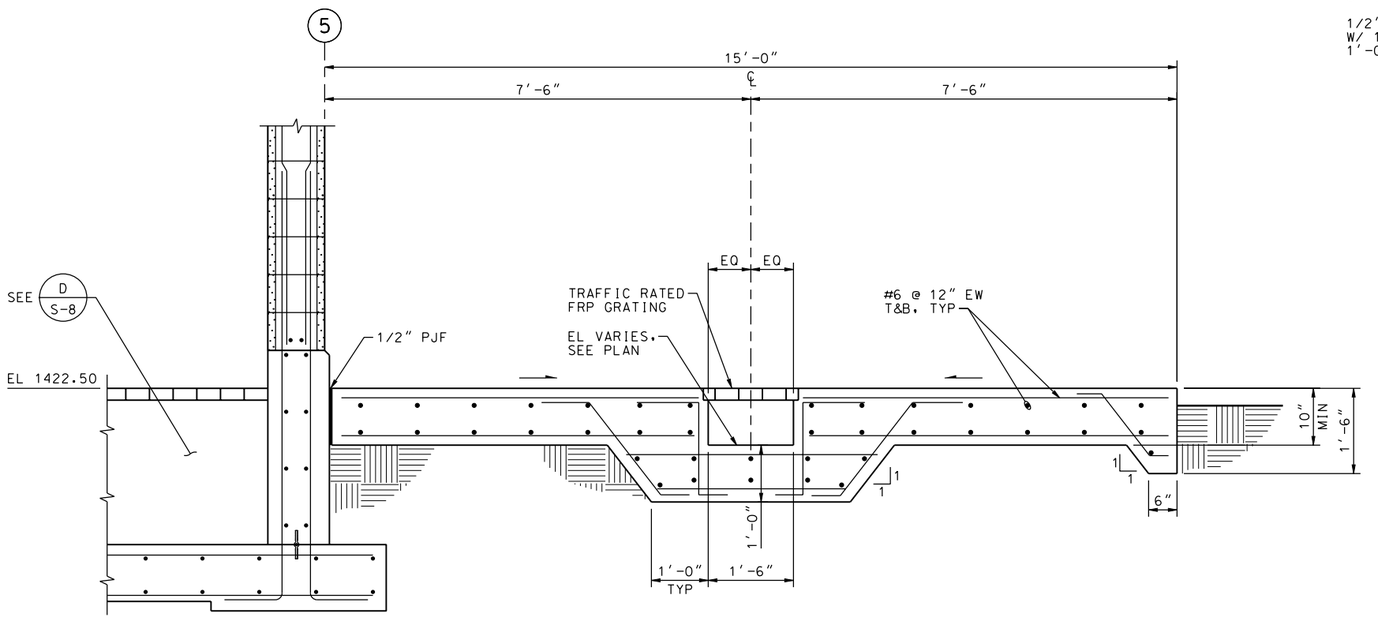

SECTION (G)
3/4"=1'-0" S-3, S-5

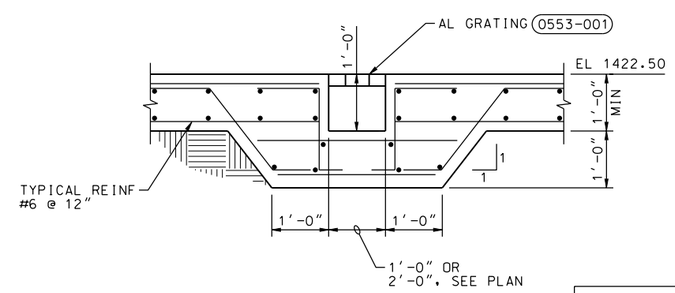

SECTION (H)
3/8"=1'-0" S-3, S-4

REGISTERED PROFESSIONAL ENGINEER THOMAS E. PAYNE No. C65724 Exp. 09-30-11 CIVIL STATE OF CALIFORNIA

DATE: 10/05/09

SYMBOL	DESCRIPTIONS	DATE	APPROVAL

REVISIONS

EASTERN MUNICIPAL WATER DISTRICT
PERRIS II DESALINATION FACILITY
PERRIS, CALIFORNIA

FOUNDATION AND PERGOLA PLAN, SECTION AND DETAILS

DESIGNED BY: T PAGE
DRAWN BY: A VARGAS
CHECKED BY: M GOODSON

U.S. ARMY ENGINEER DISTRICT
LOS ANGELES
CORPS OF ENGINEERS

CH2MHILL

SUBMITTED BY:
ART JUNG, P.E.
CHIEF, DESIGN BRANCH

CADD FILE NAME: PDFs304d.dgn
SPEC. NO.: NOT APPLICABLE
L.A. DISTRICT FILE NO. XXX-XXXX

S-10

SHEET 71 OF 226 SHEETS

PLOT DATE: 2/19/2010 PLOT TIME: 10:59:01 AM
NDM-SCO:EMWD USACE PERRIS II/ PDFs304d.dgn