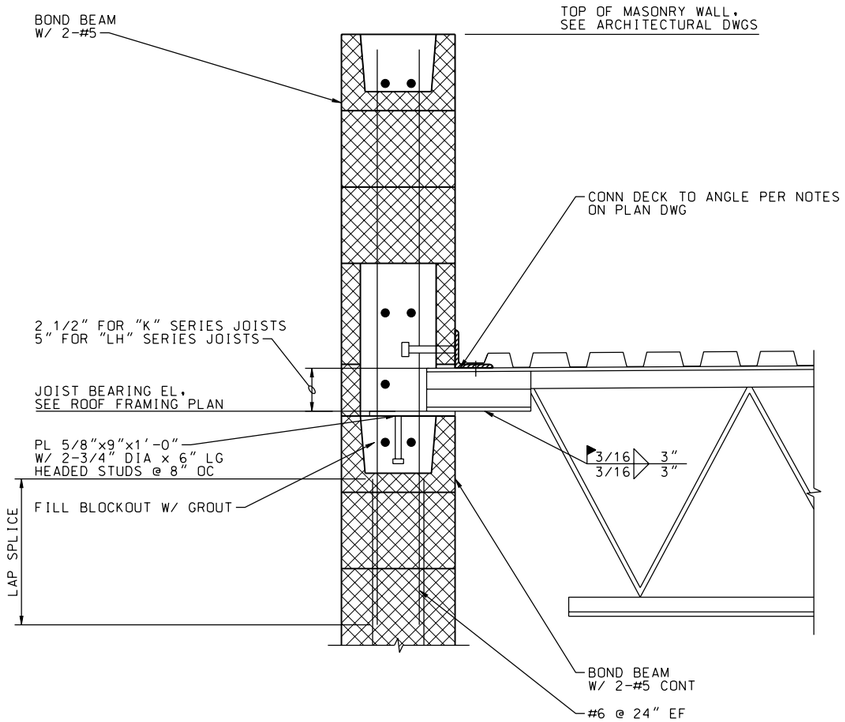

SECTION A
NTS S-6,S-7,—

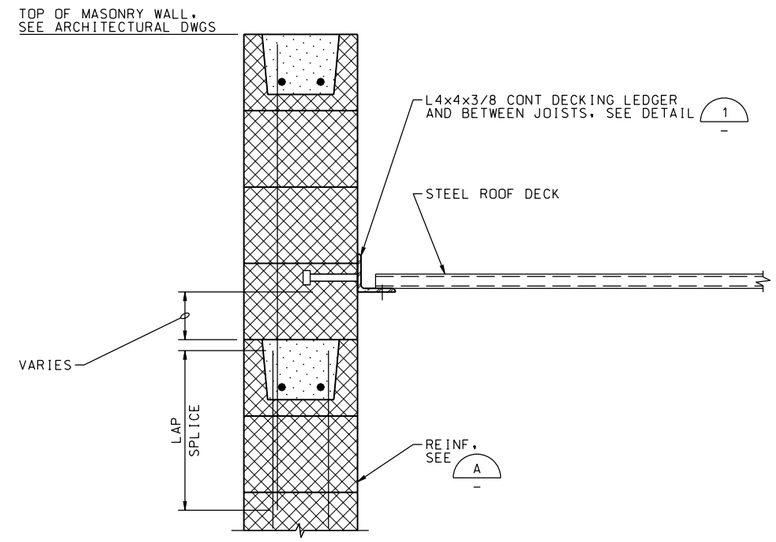

SECTION B
NTS S-6,S-7

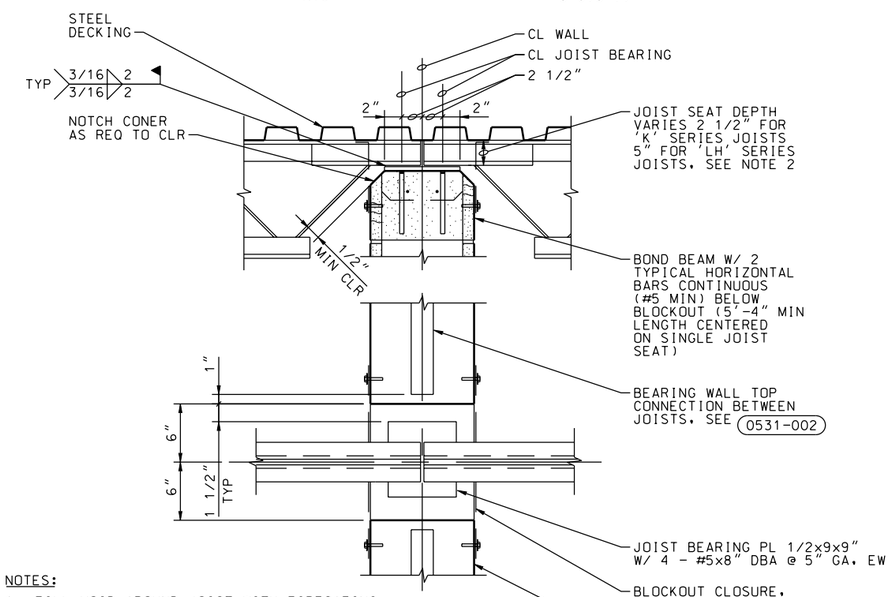

NOTES:

1. FILL VOID AROUND JOIST WITH FIRESAFING.
2. FOR SITUATIONS WITH 'K' SERIES JOISTS ON ONE SIDE OF WALL AND 'LH' SERIES JOIST ON THE OTHER, USE HSS 2 1/2 X 2 1/2 X 1/4 SHIM UNDER 'K' SERIES JOIST.
3. CMU WALL ABOVE JOIST BRG IS NOT SHOWN.

SECTION C
NTS S-6,S-7

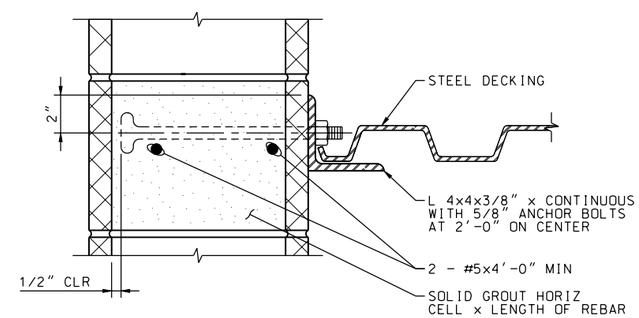

NOTES:

1. CONTRACTOR'S OPTION TO DRILL AND EPOXY BOLTS W/ MINIMUM 6" EMBEDMENT DEPTH.
2. USE BTWN JOISTS AND ON DECK BEARING SIDES.

DETAIL 1
NTS

REGISTERED PROFESSIONAL ENGINEER THOMAS E. PETIE No. C65724 Exp. 09-30-11 CIVIL STATE OF CALIFORNIA
DATE: 10/05/09

SYMBOL	DESCRIPTIONS	DATE	APPROVAL

REVISIONS

EASTERN MUNICIPAL WATER DISTRICT
PERRIS II DESALINATION FACILITY
PERRIS, CALIFORNIA

ROOF FRAMING
SECTION AND DETAILS

U.S. ARMY ENGINEER DISTRICT
LOS ANGELES
CORPS OF ENGINEERS

DESIGNED BY: T PAGE
DRAWN BY: A VARGAS
CHECKED BY: M GOODSON

CADD FILE NAME: PDFs301d.dgn

SUBMITTED BY: ART JUNG, P.E.
CHIEF, DESIGN BRANCH

SPEC. NO.: NOT APPLICABLE

CH2MHILL

L.A. DISTRICT FILE NO. XXX-XXXX

S-11

SHEET 72 OF 226 SHEETS

NDM-SCO:EMWD USACE PERRIS II/PDFs301d.dgn PLOT DATE: 2/19/2010 PLOT TIME: 10:59:09 AM