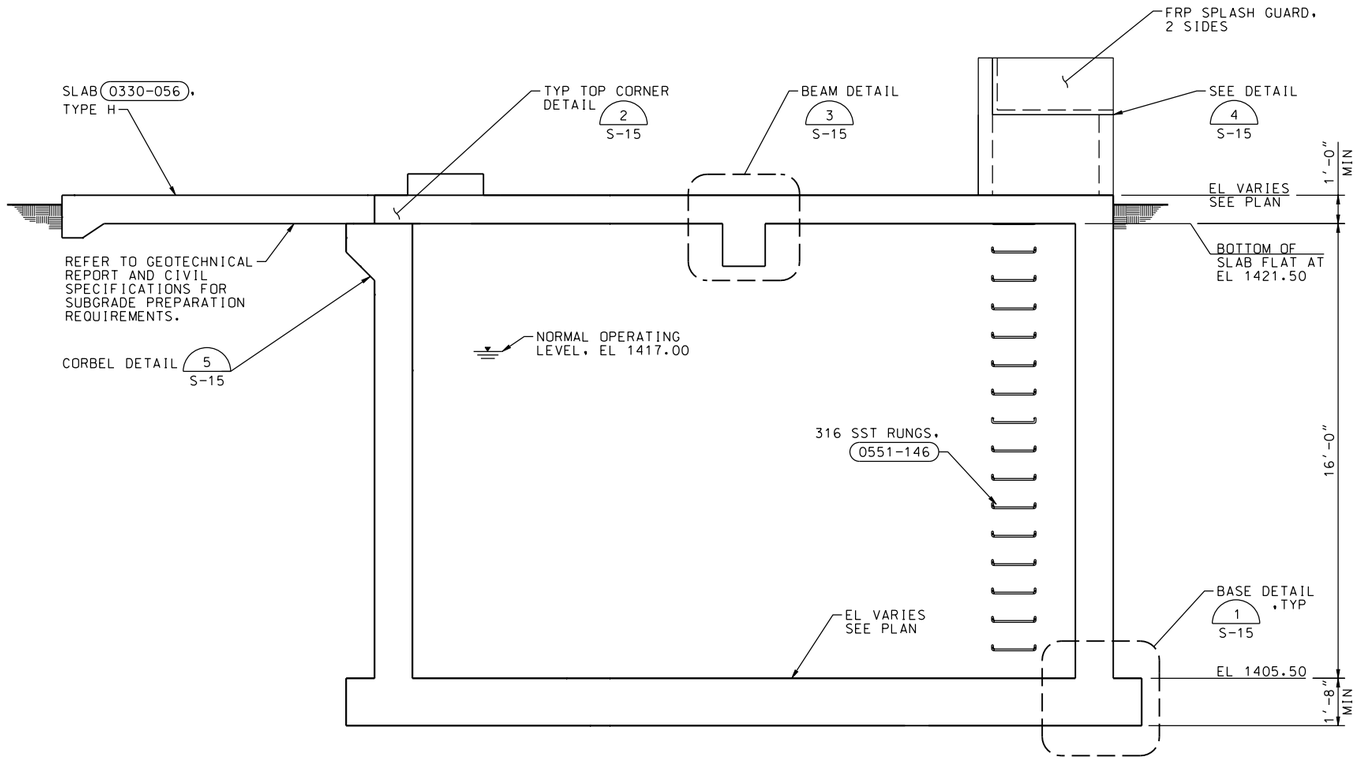

SECTION A
3/8"=1'-0" S-12, S-13

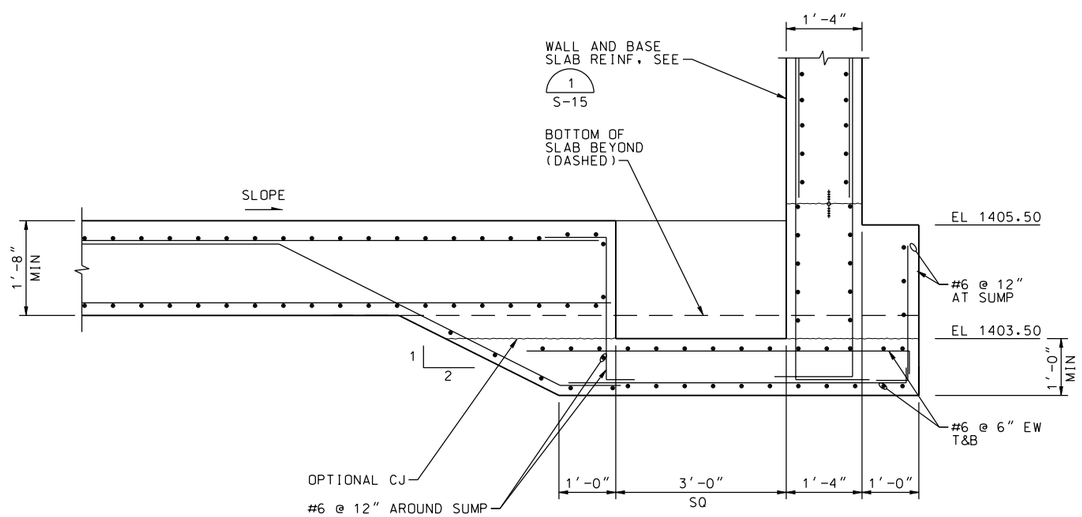

SECTION B
3/4"=1'-0" S-12

SYMBOL	DESCRIPTIONS	DATE	APPROVAL

REVISIONS

EASTERN MUNICIPAL WATER DISTRICT
PERRIS II DESALINATION FACILITY
PERRIS, CALIFORNIA

CONCENTRATE PUMP STATION SECTIONS

U.S. ARMY ENGINEER DISTRICT
LOS ANGELES
CORPS OF ENGINEERS

DESIGNED BY: T PAGE
DRAWN BY: A VARGAS
CHECKED BY: M GOODSON

CH2MHILL

SUBMITTED BY: ART JUNG, P.E.
CHIEF, DESIGN BRANCH

CADD FILE NAME: PDFs305d.dgn

SPEC. NO.: NOT APPLICABLE

L.A. DISTRICT FILE NO. XXX-XXXX

REGISTERED PROFESSIONAL ENGINEER
THOMAS E. PAYNE
No. C65724
Exp. 09-30-11
CIVIL
STATE OF CALIFORNIA

DATE: 10/05/09

S-14

SHEET 75 OF 226 SHEETS

NDM-SCO:EMWD USACE PERRIS II/ PDFs305d.dgn PLOT DATE: 2/19/2010 PLOT TIME:10:59:26 AM