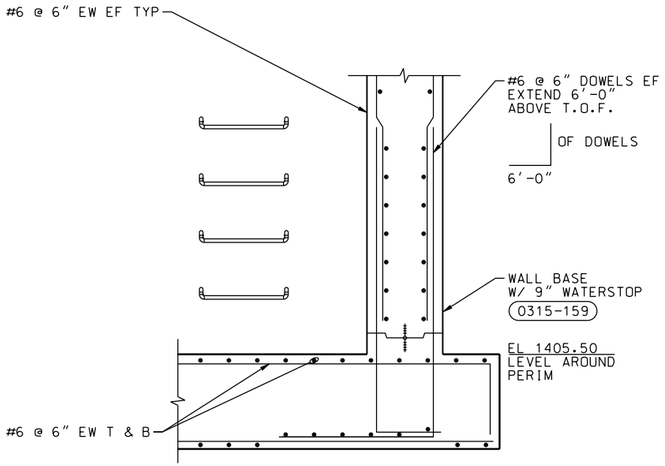


NOTE:

1. TYP PERIMETER WALL BASE.

BASE DETAIL (1) S-14
3/4"=1'-0"

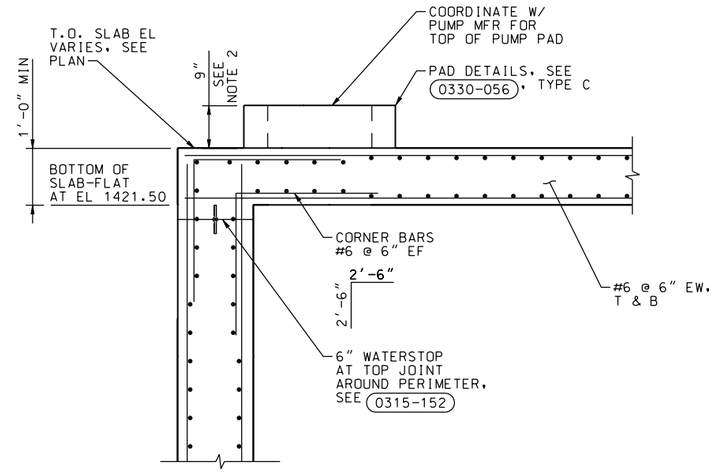


TOP CORNER DETAIL (2) S-14
3/4"=1'-0"

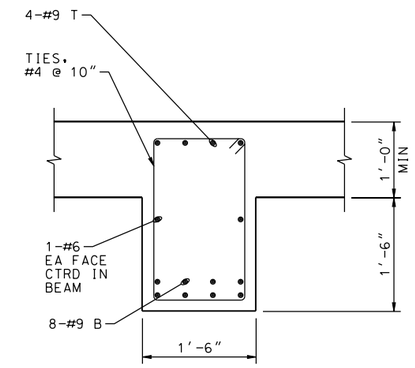


NOTE:

1. TYP ROOF REINF NOT SHOWN.

BEAM DETAIL (3) S-13, S-14
1/2"=1'-0"

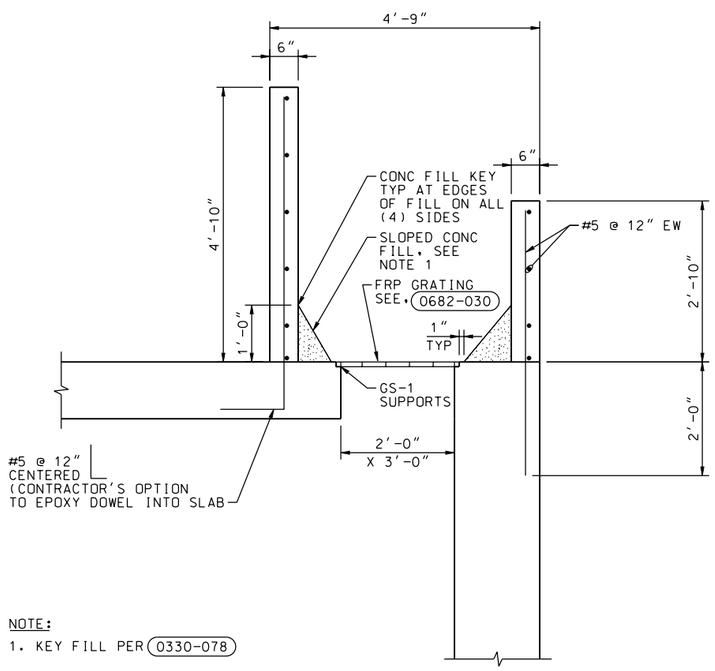


NOTE:

1. KEY FILL PER (0330-078)

DETAIL (4) S-13, S-14
3/4"=1'-0"

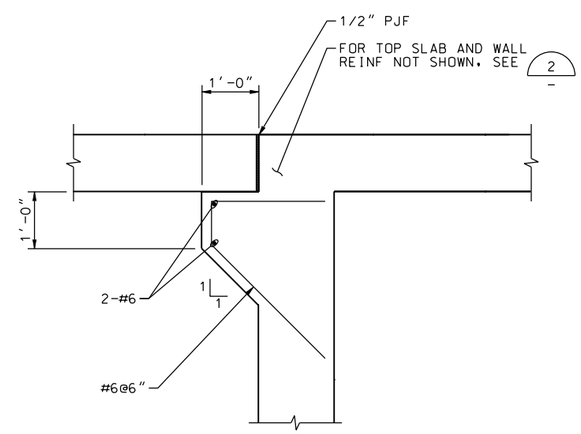


DETAIL (5) S-14, S-21
3/4"=1'-0"

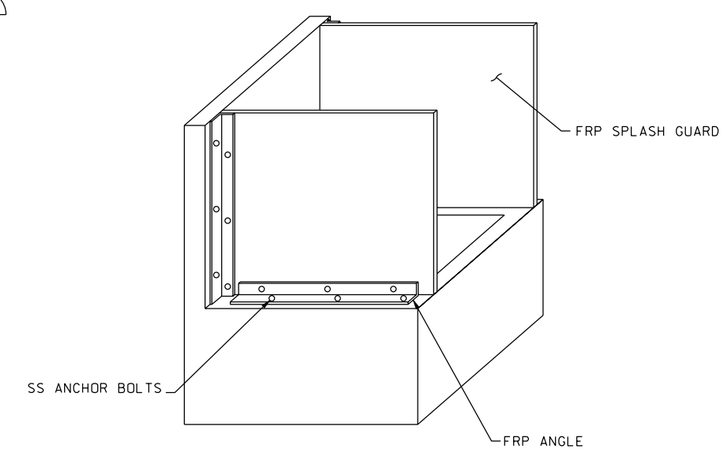


DETAIL (6) S-13
NTS

REGISTERED PROFESSIONAL ENGINEER THOMAS E. PETIE No. C65724 Exp. 09-30-11 CIVIL STATE OF CALIFORNIA

DATE: 10/05/09

| SYMBOL | DESCRIPTIONS | DATE | APPROVAL |
|---|---|---|---|
| | | | |

REVISIONS

EASTERN MUNICIPAL WATER DISTRICT
PERRIS II DESALINATION FACILITY
PERRIS, CALIFORNIA

**CONCENTRATE PUMP STATION DETAILS**

DESIGNED BY: T PAGE
DRAWN BY: A VARGAS
CHECKED BY: M GOODSON

U.S. ARMY ENGINEER DISTRICT
LOS ANGELES
CORPS OF ENGINEERS

CADD FILE NAME: PDFs503d.dgn

**CH2MHILL**

SUBMITTED BY: ART JUNG, P.E.
CHIEF, DESIGN BRANCH

SPEC. NO.: NOT APPLICABLE

L.A. DISTRICT FILE NO. XXX-XXXX

**S-15**

SHEET **76** OF **226** SHEETS

NDM-SCO:EMWD USACE PERRIS II/ PDFs503d.dgn PLOT DATE: 2/19/2010 PLOT TIME: 10:59:34 AM