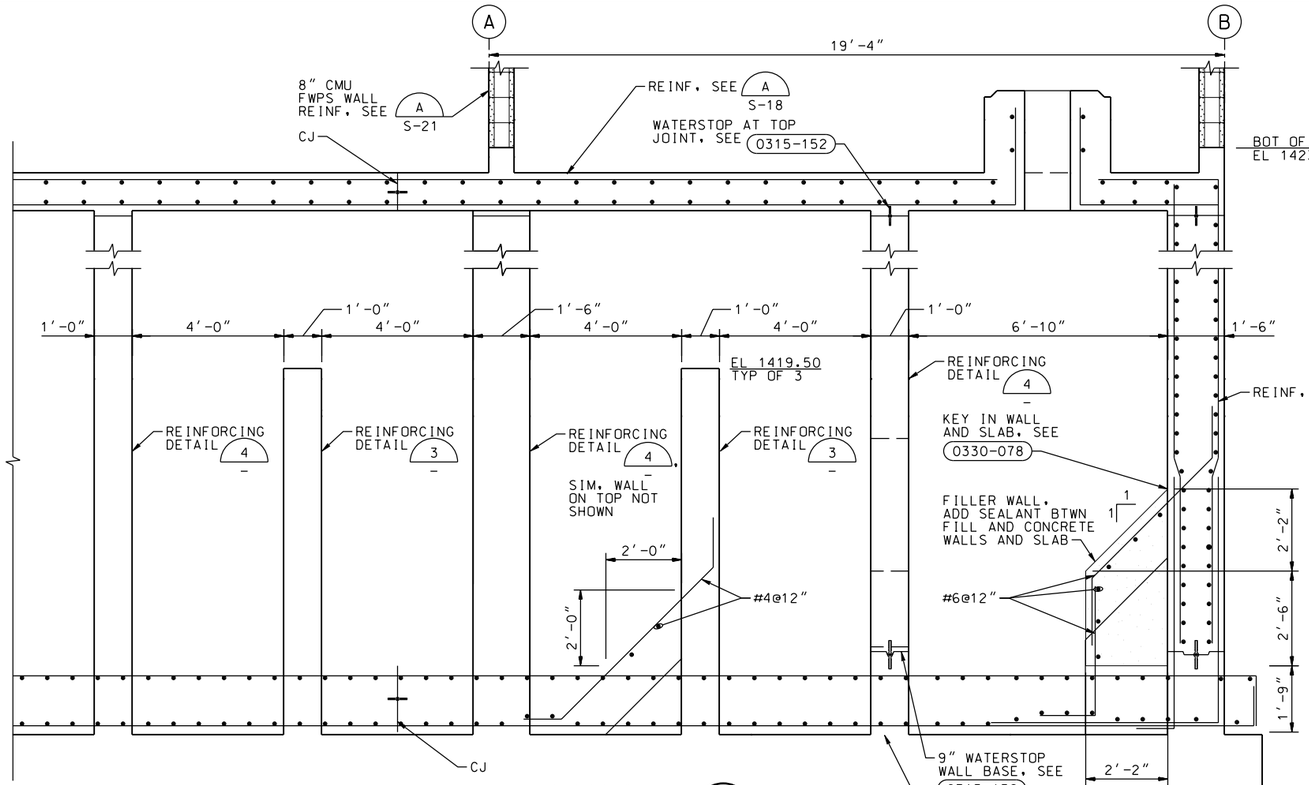

SECTION D
1/2"=1'-0" S-16, S-17

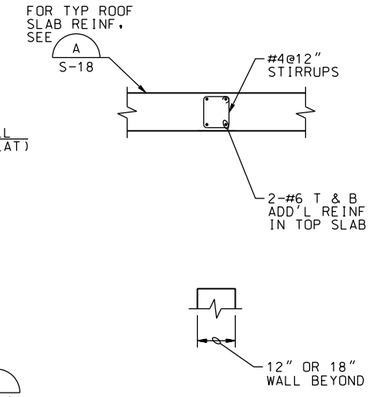

SECTION E
1/2"=1'-0" S-17

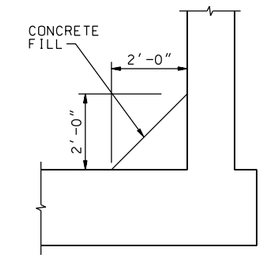

DETAIL 1
1/2"=1'-0" S-16

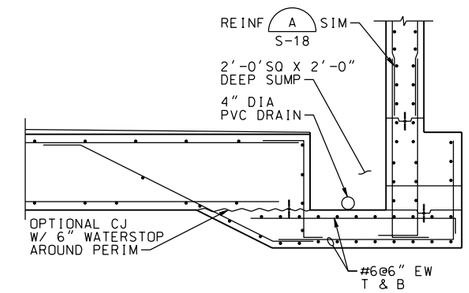

SECTION F
1/2"=1'-0" S-16,S-18

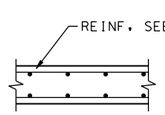

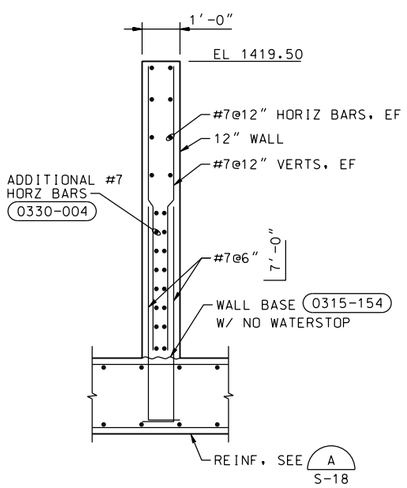

DETAIL 3
1/2"=1'-0" S-16

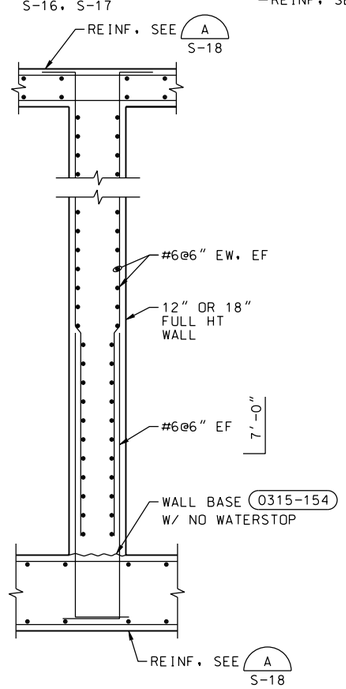

DETAIL 4
1/2"=1'-0" -

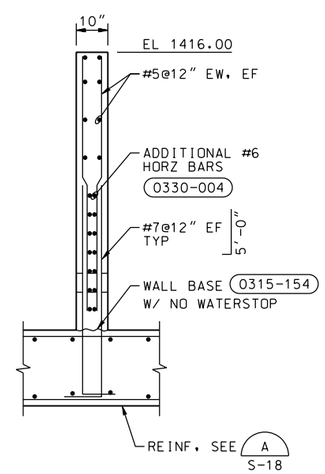

DETAIL 5
1/2"=1'-0" S-18

REGISTERED PROFESSIONAL ENGINEER THOMAS E. PAGE No. C65724 Exp. 09-30-11 CIVIL STATE OF CALIFORNIA
DATE: 10/05/09

SYMBOL	DESCRIPTIONS	DATE	APPROVAL

REVISIONS

EASTERN MUNICIPAL WATER DISTRICT
PERRIS II DESALINATION FACILITY
PERRIS, CALIFORNIA

CLEARWELL
SECTIONS AND DETAILS

U.S. ARMY ENGINEER DISTRICT
LOS ANGELES
CORPS OF ENGINEERS

DESIGNED BY: T PAGE
DRAWN BY: A VARGAS
CHECKED BY: M GOODSON

CH2MHILL

SUBMITTED BY: ART JUNG, P.E.
CHIEF, DESIGN BRANCH

SPEC. NO.: NOT APPLICABLE

CADD FILE NAME: PDFs307d.dgn

L.A. DISTRICT FILE NO. XXX-XXXX

S-19

SHEET 80 OF 226 SHEETS

NDM-SCO:EMWD USACE PERRIS II/ PDFs307d.dgn PLOT DATE: 2/19/2010 PLOT TIME: 11:00:01 AM