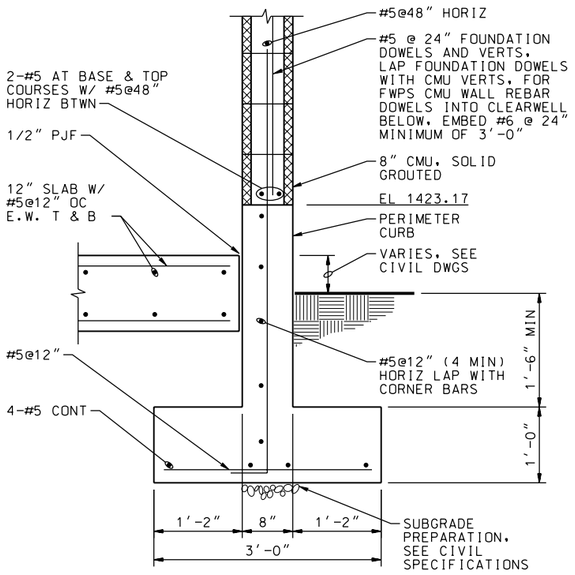

SECTION A
NTS S-19,S-20,S-22

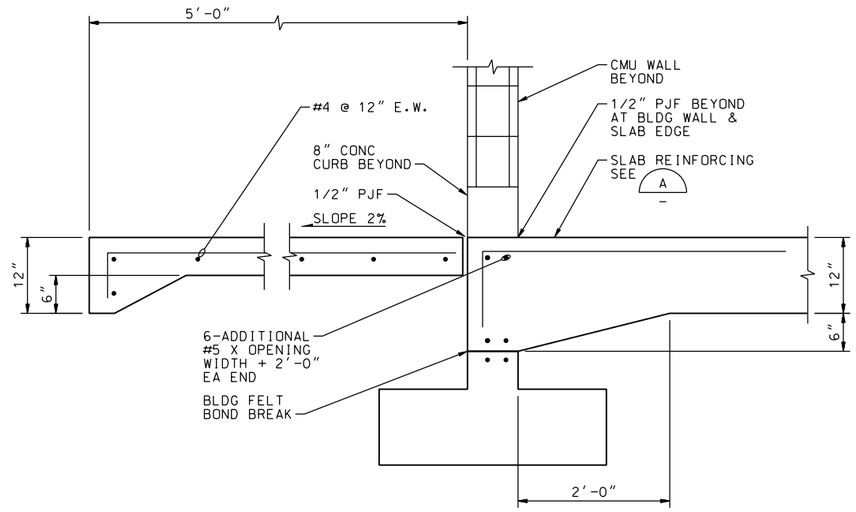

SECTION B
NTS S-20

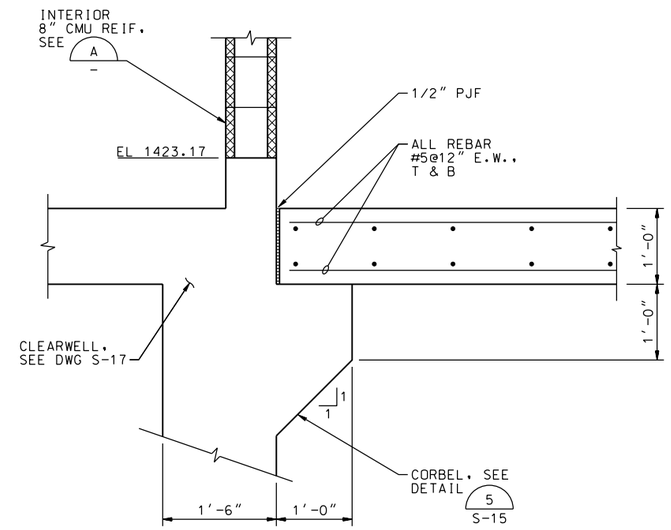

SECTION C
NTS S-20

SYMBOL	DESCRIPTIONS	DATE	APPROVAL

REVISIONS

EASTERN MUNICIPAL WATER DISTRICT
PERRIS II DESALINATION FACILITY
PERRIS, CALIFORNIA

FINISHED WATER PUMP STATION SECTIONS

DESIGNED BY: T PAGE
DRAWN BY: A VARGAS
CHECKED BY: M GOODSON

U.S. ARMY ENGINEER DISTRICT
LOS ANGELES
CORPS OF ENGINEERS

CH2MHILL

SUBMITTED BY:
ART JUNG, P.E.
CHIEF, DESIGN BRANCH

L.A. DISTRICT FILE NO. XXX-XXXX
SPEC. NO.: NOT APPLICABLE
CADD FILE NAME: PDFs501d.dgn

REGISTERED PROFESSIONAL ENGINEER
THOMAS E. PAYNE
No. C65724
Exp. 09-30-11
CIVIL
STATE OF CALIFORNIA
DATE: 10/05/09

S-21

SHEET 82 OF 226 SHEETS