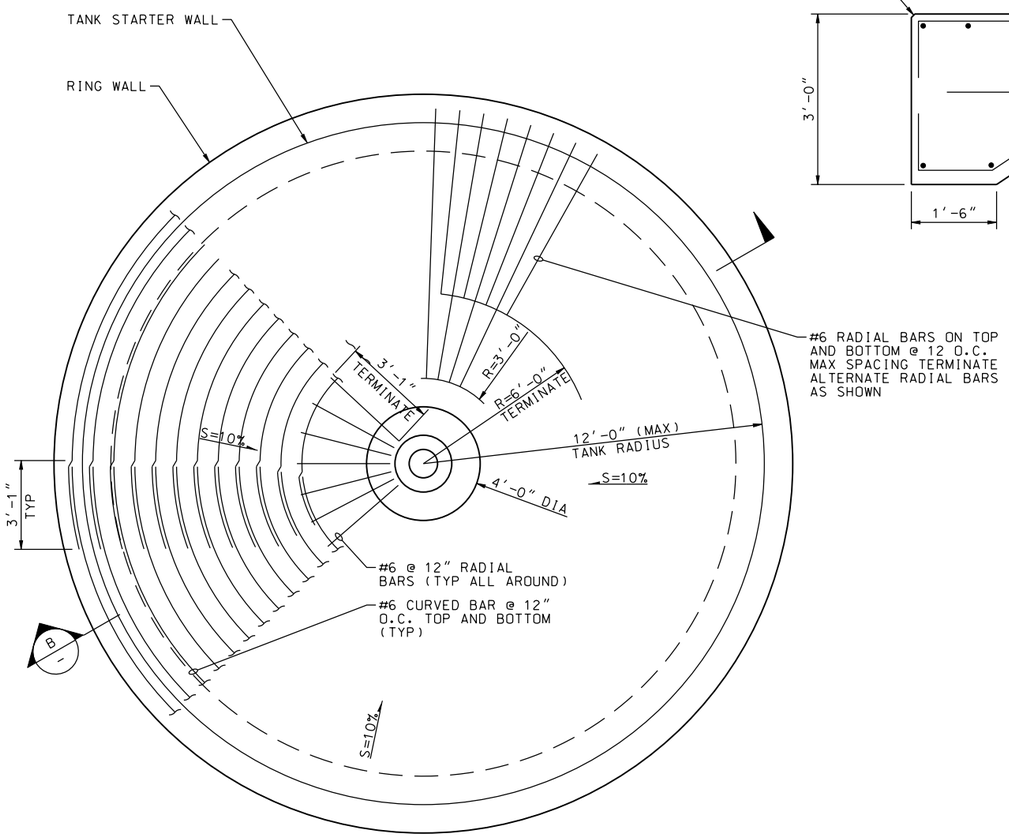

RECLAIM TANK FOUNDATION PLAN

3/8"=1'-0"

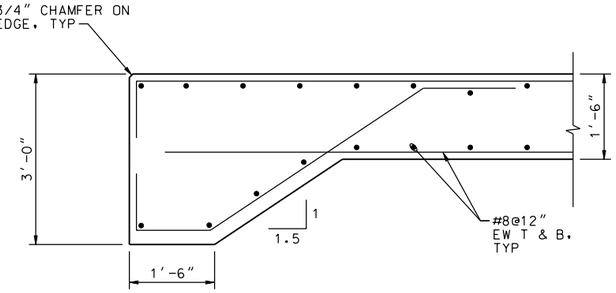

SECTION A

3/4"=1'-0" S-23

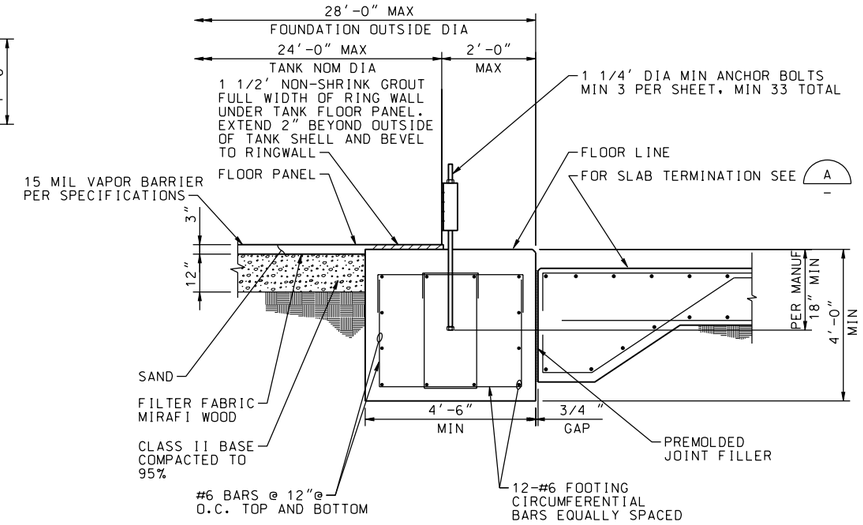

RINGWALL FOOTING SECTION C

NTS S-23

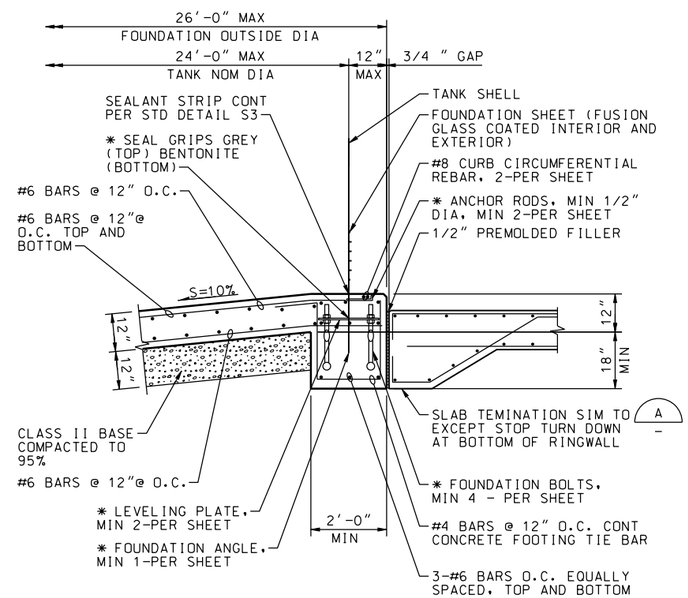

NOTE

* THESE DIMENSIONS AND QUANTITIES TO BE SUPPLIED BY TANK MANUFACTURER.

TANK FOOTING DETAIL

NTS

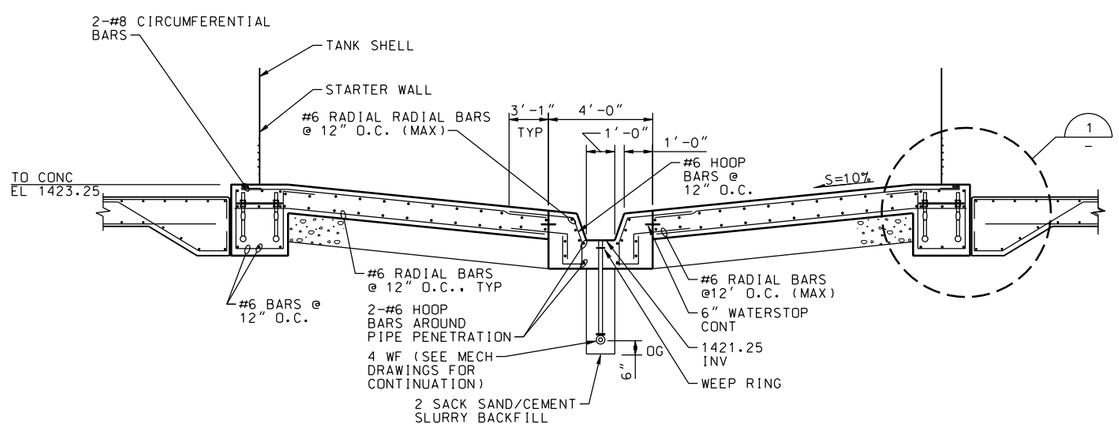

SECTION B

NTS

SYMBOL	DESCRIPTIONS	DATE	APPROVAL

REVISIONS

EASTERN MUNICIPAL WATER DISTRICT
PERRIS II DESALINATION FACILITY
PERRIS, CALIFORNIA

FE/MN FOUNDATION

PLAN, SECTIONS AND DETAILS

DESIGNED BY: T PAGE
DRAWN BY: A VARGAS
CHECKED BY: M GOODSON

U.S. ARMY ENGINEER DISTRICT
LOS ANGELES
CORPS OF ENGINEERS

CADD FILE NAME: PDFs308d.dgn

SUBMITTED BY: ART JUNG, P.E.
CHIEF, DESIGN BRANCH

SPEC. NO.: NOT APPLICABLE

L.A. DISTRICT FILE NO. XXX-XXXX

REGISTERED PROFESSIONAL ENGINEER THOMAS E. PETERSEN No. C65724 Exp. 09-30-11 CIVIL STATE OF CALIFORNIA

DATE: 10/05/09

S-24

SHEET 85 OF 226 SHEETS

NDM-SCO:EMWD USACE PERRIS II/ PDFs308d.dgn PLOT DATE: 2/19/2010 PLOT TIME: 11:00:42 AM