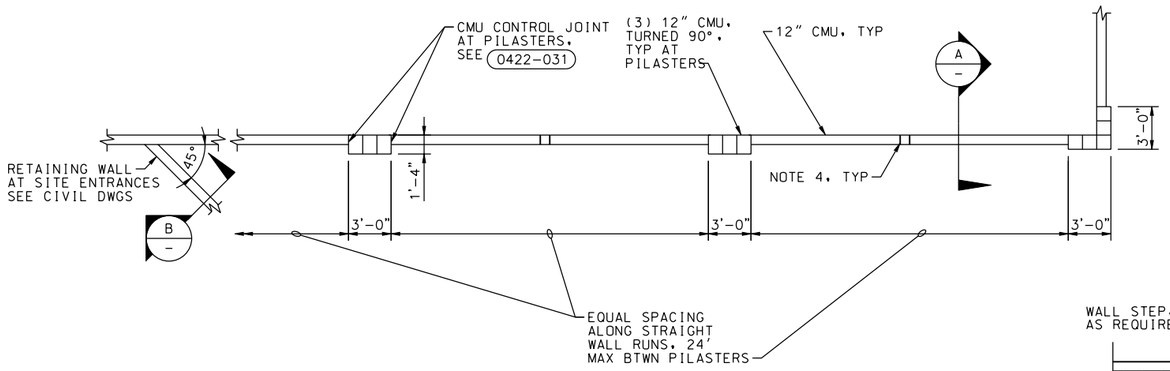

NOTES:

1. FOR CMU WALL HEIGHT GREATER THAN 8'-0", FOOTING WIDTH = 6'-0" (CTRD ON WALL), WALL REINF IS #6@24" EF AND STEMWALL DOWEL IS #6@ 12" EF.
2. CMU WALL CORNERS AND INTERSECTIONS, SEE 0422-001
3. SPLIT RIBBED CMU SHALL HAVE 7 VERTICAL SCORES FOR EACH 16" LONG UNIT.
4. PROVIDE 8"X8" MASONRY OPENINGS AT BOTTOM OF CMU WALL, SPACING SHALL BE 10 FT ON CENTER MIN AND BE COORDINATED WITH LOCATION OF PLANTINGS.

TYPICAL WALL PLAN
3/16"=1'-0"

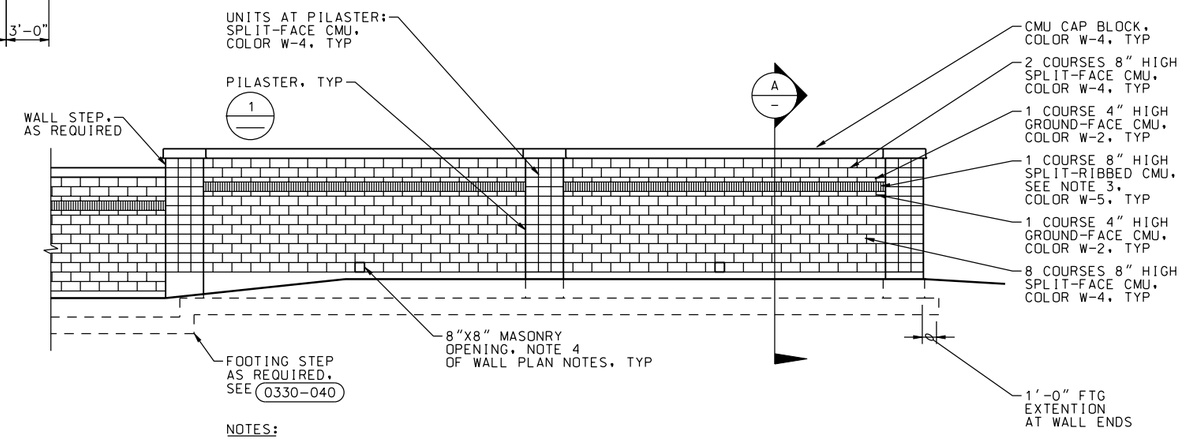

NOTES:

1. FINISH EXPOSED MASONRY AND CONCRETE SURFACES INCLUDING CAP BLOCK OUTSIDE WALL WITH PS-17.
2. FINISH EXPOSED MASONRY AND CONCRETE SURFACES INSIDE WALL WITH WATER REPELLENT.

TYPICAL WALL ELEVATION
3/16"=1'-0"

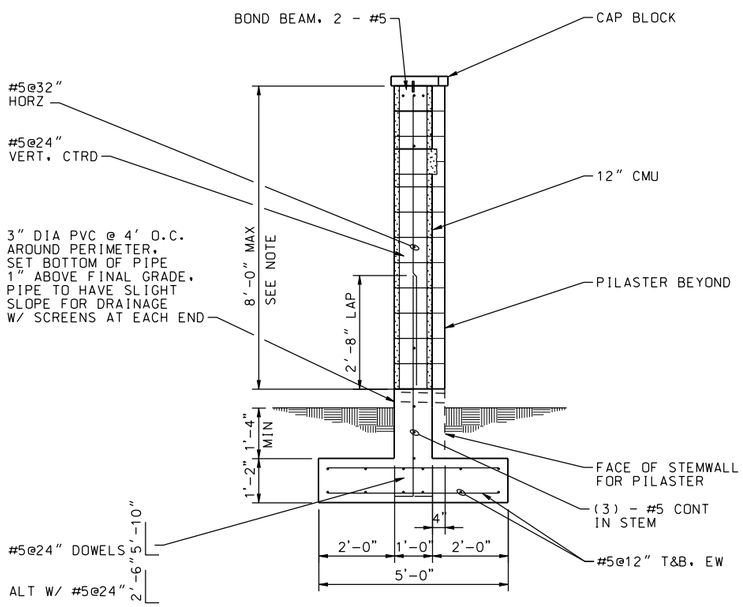

SECTION A
1/2"=1'-0"

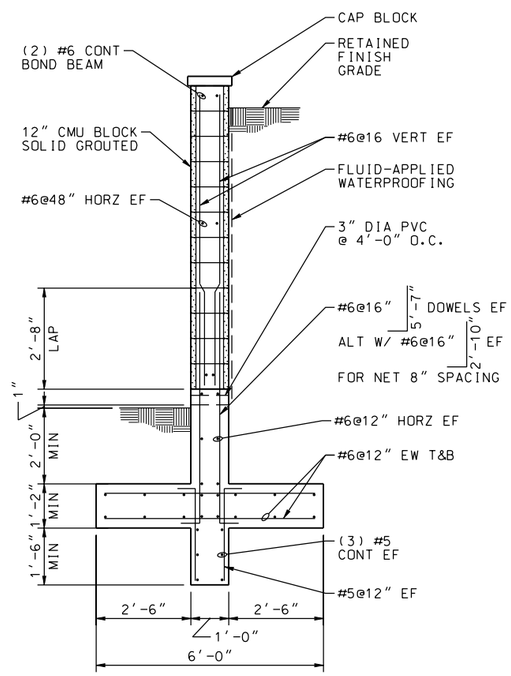

SECTION B
1/2"=1'-0"

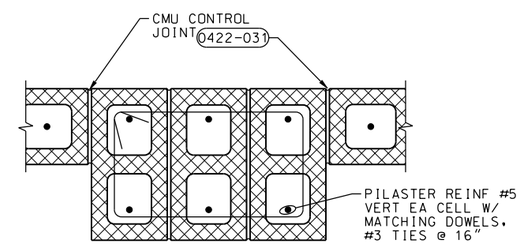

DETAIL 1
1 1/2"=1'-0"

REGISTERED PROFESSIONAL ENGINEER THOMAS E. PETTIE No. C65724 Exp. 09-30-11 CIVIL STATE OF CALIFORNIA

DATE: 10/05/09

SYMBOL	DESCRIPTIONS	DATE	APPROVAL

REVISIONS

EASTERN MUNICIPAL WATER DISTRICT
PERRIS II DESALINATION FACILITY
PERRIS, CALIFORNIA

SITE WALL PLAN
ELEVATION AND SECTION

DESIGNED BY: T PAGE
DRAWN BY: A VARGAS
CHECKED BY: M GOODSON

U.S. ARMY ENGINEER DISTRICT
LOS ANGELES
CORPS OF ENGINEERS

CH2MHILL

SUBMITTED BY:
ART JUNG, P.E.
CHIEF, DESIGN BRANCH

CADD FILE NAME: PDFs310d.dgn
SPEC. NO.: NOT APPLICABLE
L.A. DISTRICT FILE NO. XXX-XXXX

S-25

SHEET 86 OF 226 SHEETS

NDM-SCO:EMWD USACE PERRIS II/ PDFs310d.dgn PLOT DATE: 2/19/2010 PLOT TIME: 11:00:49 AM