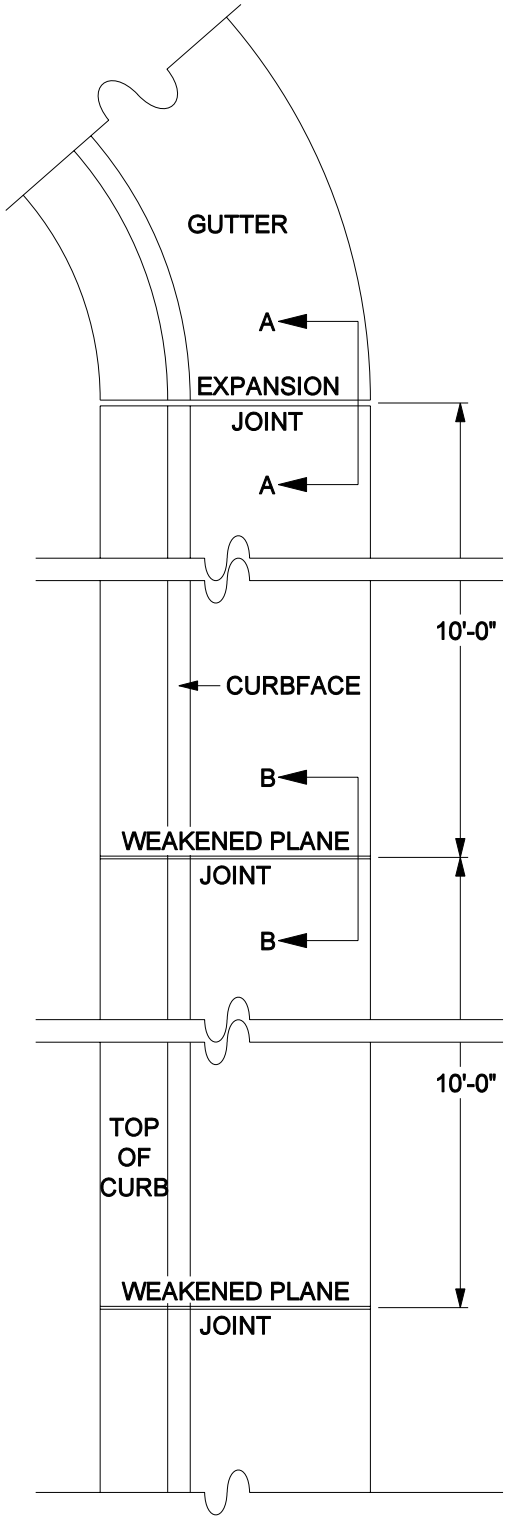

TYPICAL PLAN VIEW

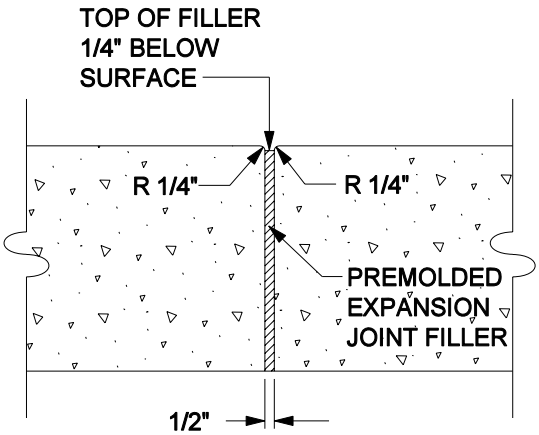

SECTION "A-A"
EXPANSION JOINT

EXPANSION JOINTS TO BE INSTALLED AT ALL B.C.'S, E.C.'S, CURB RETURNS, AND STRUCTURES.

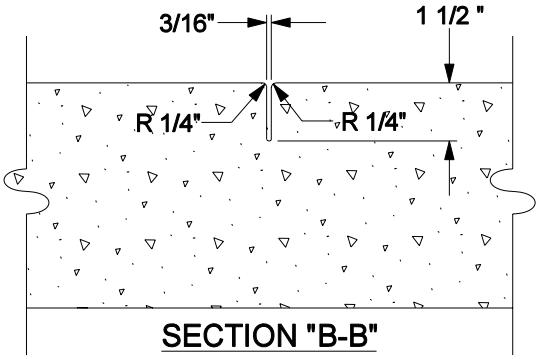

SECTION "B-B"
WEAKENED PLANE JOINT

10' INTERVAL BETWEEN TRANSVERSE JOINTS MAY BE VARIED TO ALLOW MATCHING OF JOINTS IN ADJACENT EXISTING INMPROVEMENTS.

APPROVED BY:

DATE: 05/01/07

DIRECTOR OF TRANSPORTATION
GEORGE A. JOHNSON, RCE 42328

REGISTERED PROFESSIONAL ENGINEER
GEORGE A. JOHNSON
No. CE 42328
Exp. 3-31-08
CIVIL
STATE OF CALIFORNIA

COUNTY OF RIVERSIDE

CURB AND GUTTER JOINTS

STANDARD NO. 205

REVISIONS		REV.	BY:	APR'D	DATE	REV.	BY:	APR'D	DATE
8-71, 4-90		1				4			
11-04		2				5			
		3				6			