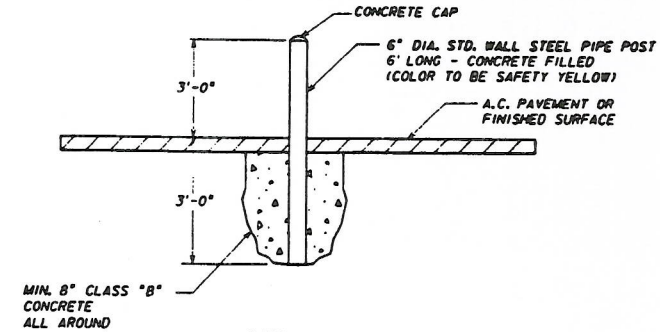

DETAIL

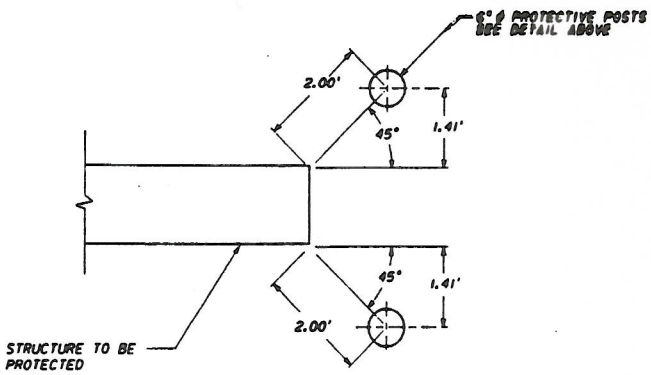

TYPICAL PLAN LOCATION

GUARD POSTS

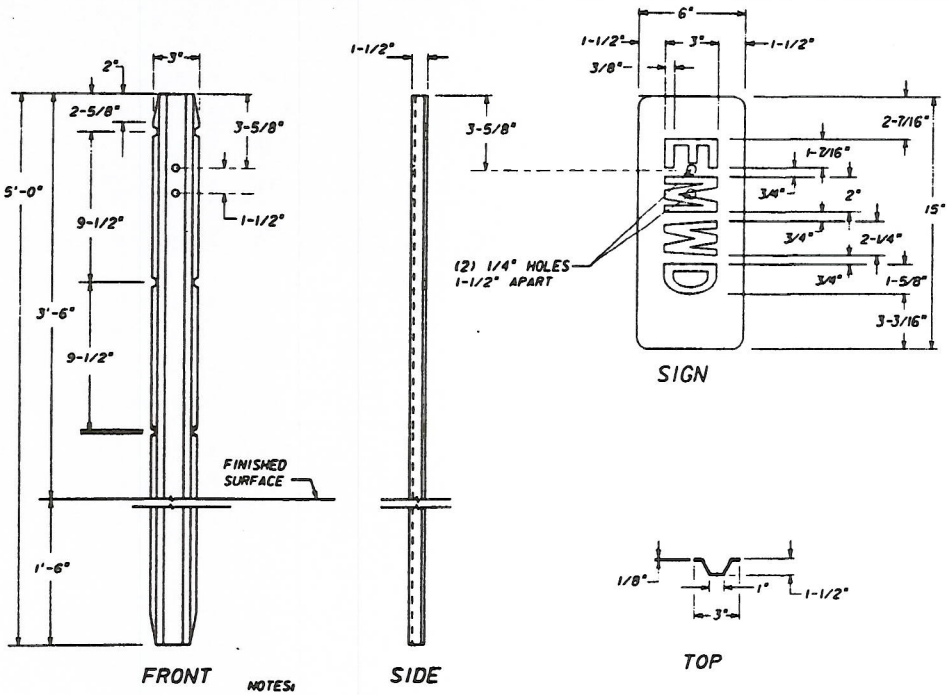

NOTES:

1. POST MATERIAL, 2.0 LBS PER FOOT; FINISH ON POST, GALVANIZED.
2. SIGN MATERIAL, .062 ALUMINUM; TO BE PAINTED WHITE WITH BLACK LETTERS.
3. SIGN TO BE PRE-PUNCHED FOR BOLT HOLES TO MATCH THOSE IN POST.
4. POST CAN BE DRIVEN.
5. SIGN TO BE ATTACHED WITH 2 - 2"X1/8" BOLT & NUT AFTER INSTALLATION OF POST.

5 FOOT STEEL MARKER POST

REVISIONS					
NO.	DATE	INITIAL	DESCRIPTION	APP'D	DATE
1	8/1/97	CRD	COMBINED A-498 AND A-504 REDRAWN ON CADD	[illegible]	12-19-00

APPROVALS	INITIAL	DATE
DESIGN		
CONSTRUCTION		
INSPECTION		
OPERATIONS		
SUBMITTED	KER	12/19/00

EASTERN MUNICIPAL WATER DISTRICT

EASTERN MUNICIPAL WATER DISTRICT STANDARD DRAWING

GUARD AND MARKER POSTS

REFERENCES: SUPERCEDES A-498 & A-504

FILE I.D.: d_standards: b665.dgn

SCALE: NONE

DRAWN BY CRD

RECOMMENDED _____ DIRECTOR OF ENGINEERING DATE

APPROVED [signature] ASSISTANT GENERAL MANAGER ENGINEERING 4/25/01 DATE

B-665