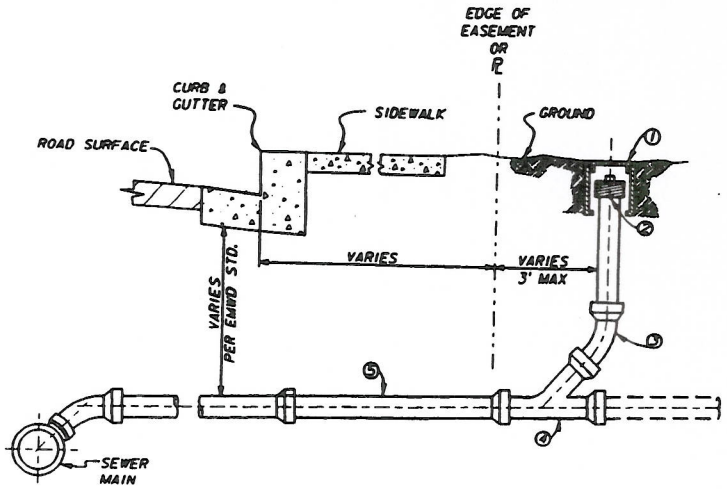

MATERIALS LIST

1. BROOKS 1-RT VALVE BOX MARKED "SEWER", OR APPROVED EQUAL.
2. THREADED CAP WITH SQUARE NUT.
3. MINIMUM 3-1/2" SEWER PIPE PER UNIFORM PLUMBING CODE.
4. WYE PER UNIFORM PLUMBING CODE.
5. MINIMUM 4" LATERAL, OR AS SHOWN ON PLANS, PER EMWD STANDARDS.

NOTES

1. PLACE CLEANOUT A MAXIMUM OF 3' BEHIND PROPERTY LINE OR EDGE OF EASEMENT.
2. LID MUST BE CAST IRON FOR LOCATING PURPOSES, MARKED "SEWER"

ON-SITE CLEANOUT

N.T.S.

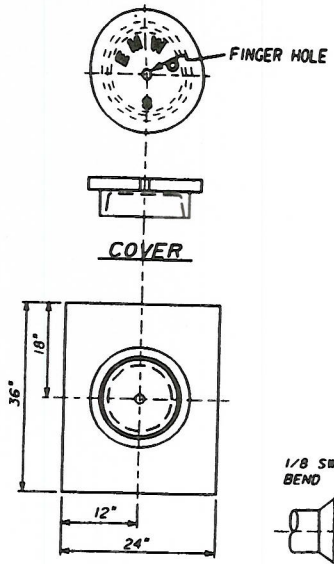

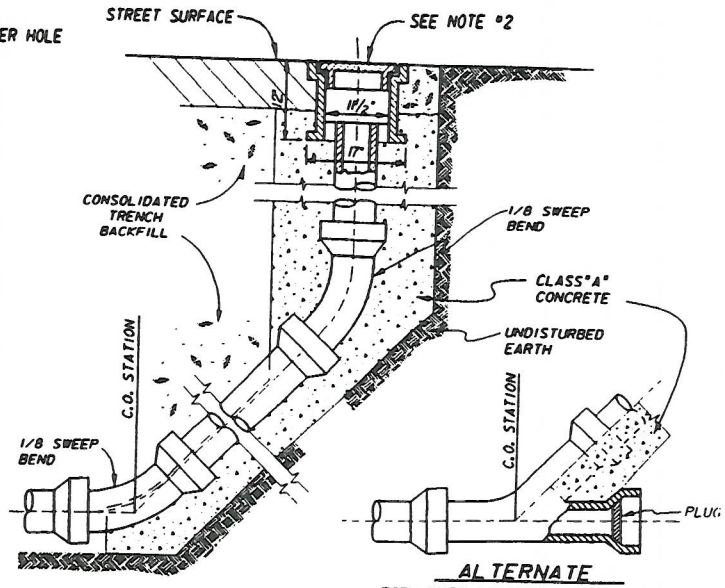

FOR LOWER 1/8 BEND, WHERE ORDERED BY ENGINEER OR SHOWN ON PLANS

NOTES

1. CLEANOUT PIPE MUST BE THE SAME DIAMETER AND MATERIAL AS MAIN LINE SEWER.
2. CASTING SHALL BE ALHAMBRA FOUNDRY NUMBER A-1241 OR APPROVED EQUAL.
3. COVER, FRAME, AND CONCRETE PAD ARE TYPICAL FOR 8" I.D. MAIN LINE SEWERS ONLY.
4. USE CLASS "A" CONCRETE THROUGHOUT.
5. PLUGS SHALL BE CEMENTED IN PLACE WITH CEMENT MORTAR OR SHALL BE NEOPRENE PLUG OR APPROVED EQUAL.
6. STATION OF LOWER 1/8 BEND OR WYE SHALL CORRESPOND TO THE CLEANOUT STATION SHOWN ON THE CONSTRUCTION DRAWINGS WITH CLEANOUT CONSTRUCTION EXTENDED BEYOND THAT POINT AS NECESSARY.

MAIN LINE CLEANOUT

N.T.S.

REVISIONS					
NO.	DATE	INITIAL	DESCRIPTION	APP'D	DATE
1	2/10/97	KER	REDRAWN W/CADD ON MYLAR	WJB	4/3/97

APPROVALS	INITIAL	DATE
DESIGN	SJD	8/63
CONSTRUCTION		
INSPECTION		
OPERATIONS		
SUBMITTED		

EASTERN MUNICIPAL WATER DISTRICT
STANDARD DRAWING

SEWER CLEANOUTS

MAIN LINE & ON-SITE

REFERENCES: SUPERCEDES SA-90
FILE I.D.: /USR/KARL/STNDRDS/SB-52
SCALE: NONE
DRAWN BY K.E.R.

RECOMMENDED _____ DIRECTOR OF ENGINEERING DATE

APPROVED Doyle J. Boen CHIEF ENGINEER 8/63 DATE

SB-52