AC 701 Ground Rod Installation for Pad-Mounted Transformers and Capacitors

Scope AC 701.1 Ground Rod Installation for Pad-Mounted Transformers and Capacitors
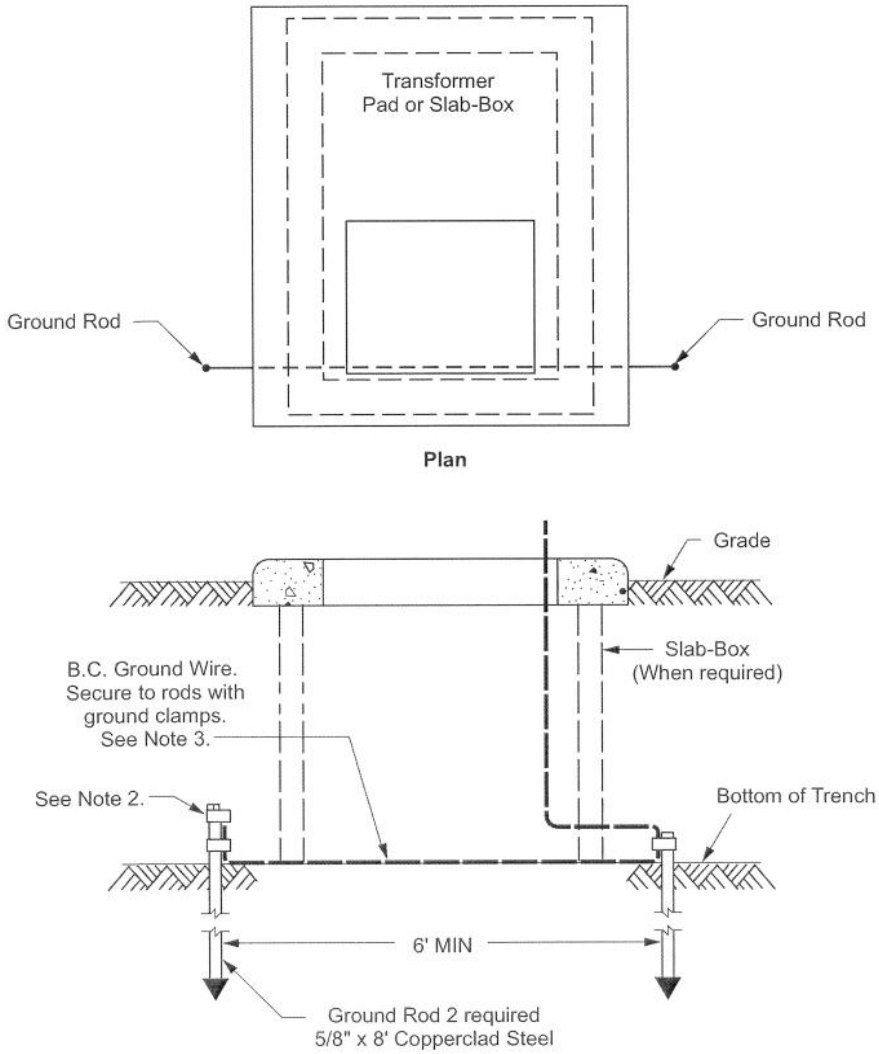
Figure AC 701–1: Ground Rod Installation for Pad-Mounted Transformers and Capacitors