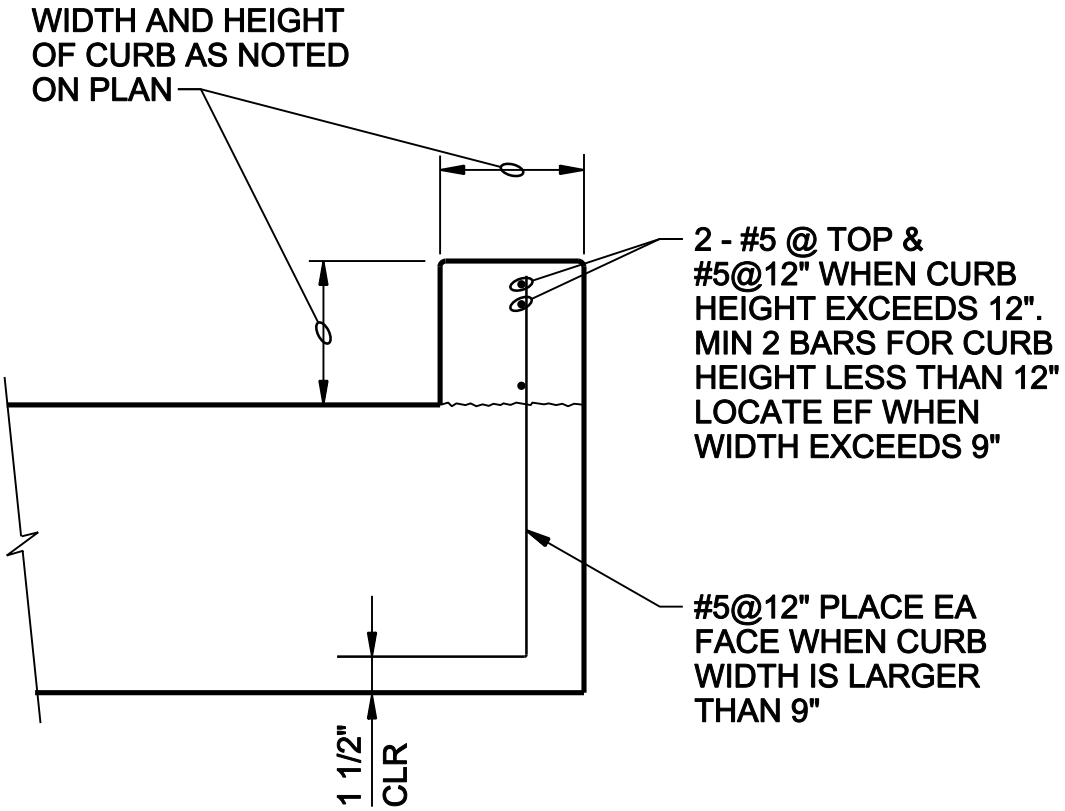

CONCRETE CURB

NTS

0330-080