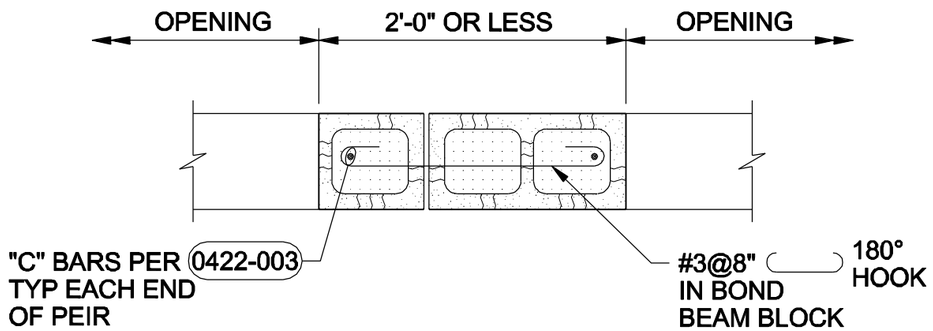

INTERIOR PLAN

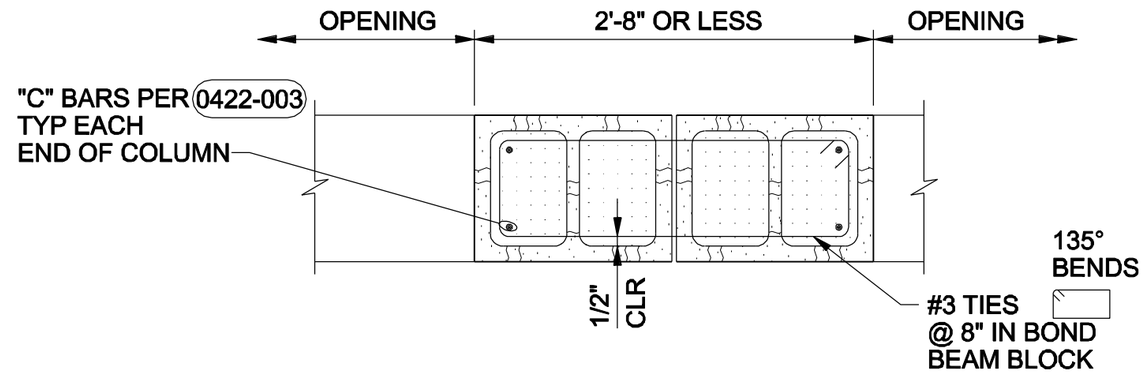

INTERIOR PLAN

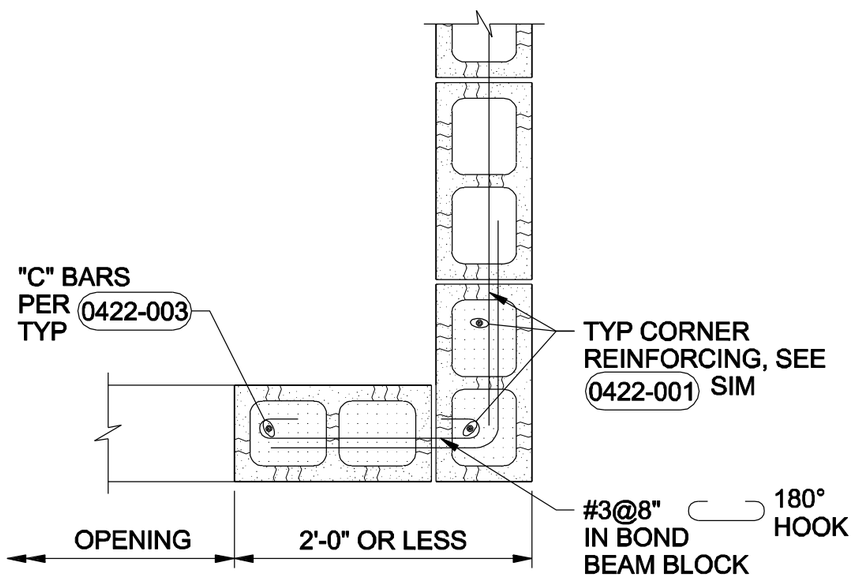

CORNER PLAN

8" CMU WALL

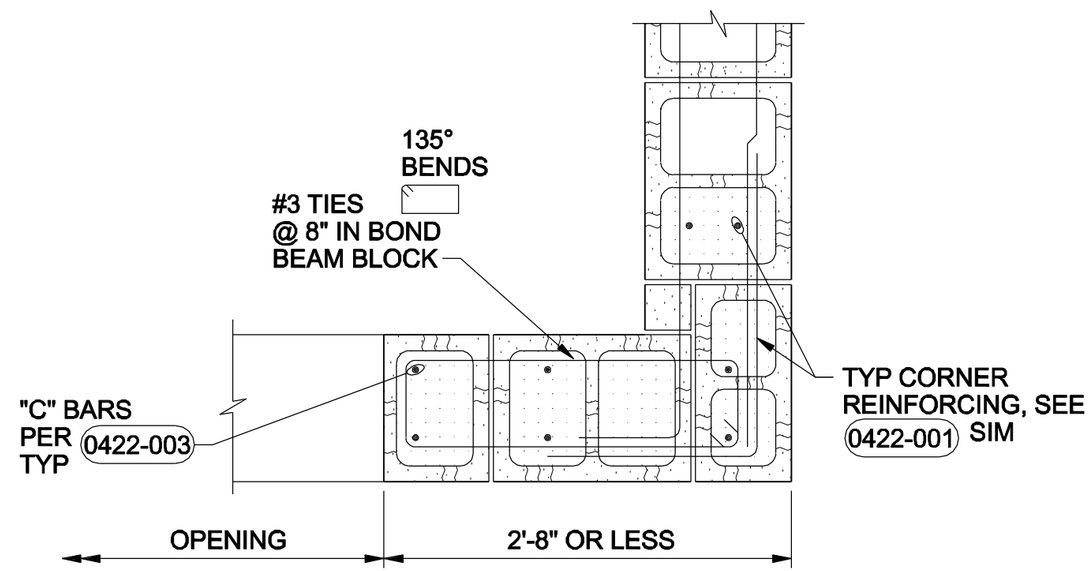

CORNER PLAN

12" CMU WALL

NOTE:

SOLID GROUT WALL COLUMNS FULL WALL HEIGHT.

CMU WALL COLUMN

NTS