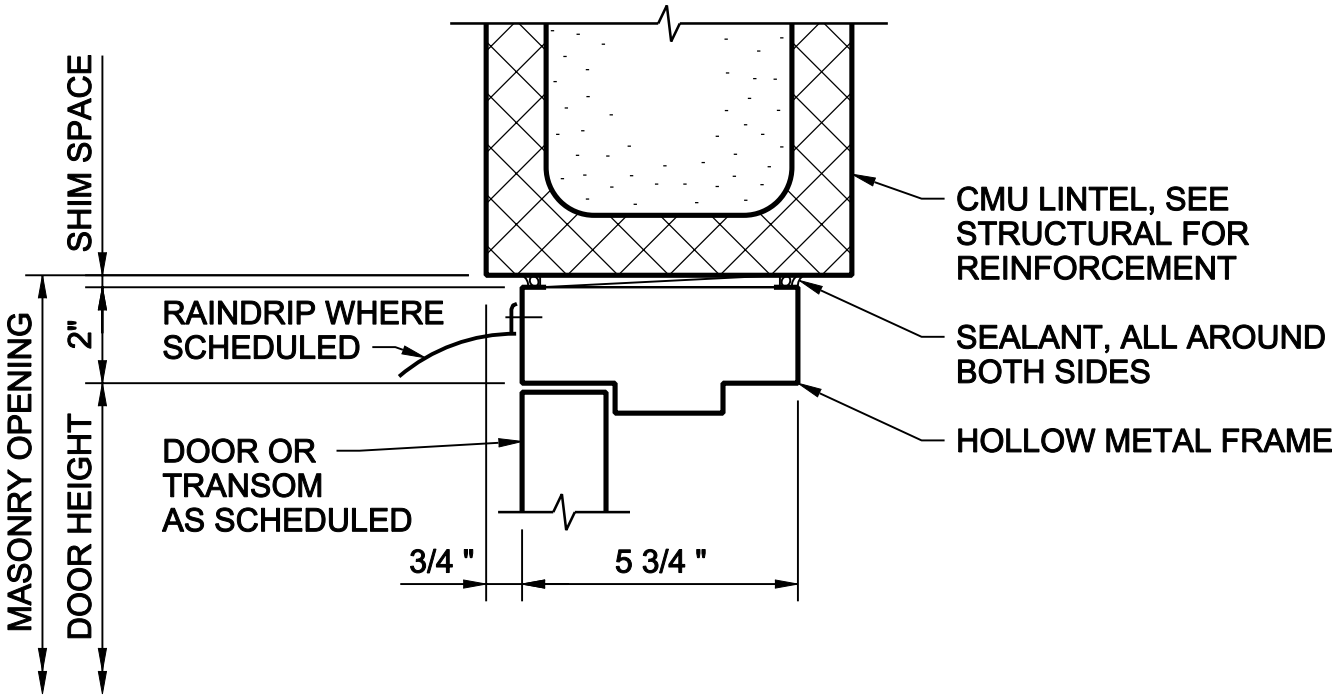

DOOR HEAD

3" = 1'-0"

EASTERN MUNICIPAL WATER DISTRICT
PERRIS II DESALINATION FACILITY

0811-003

CH2MHILL