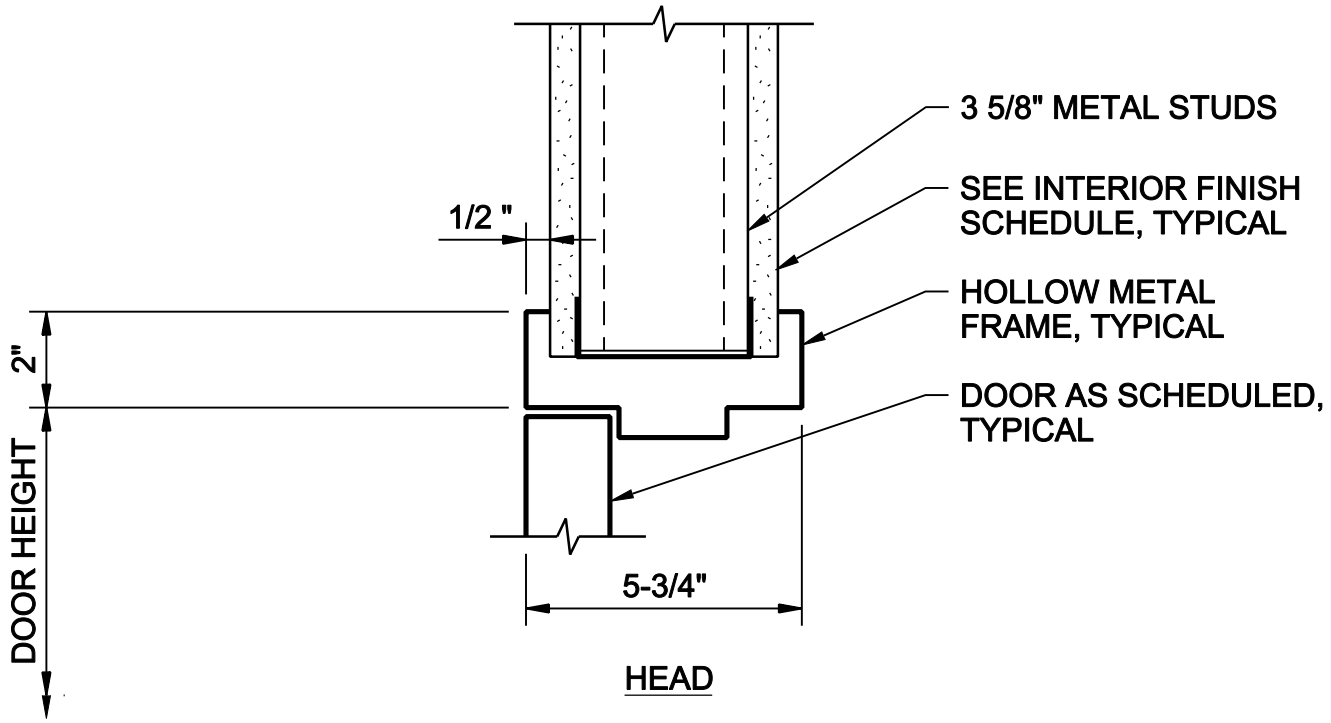

HEAD

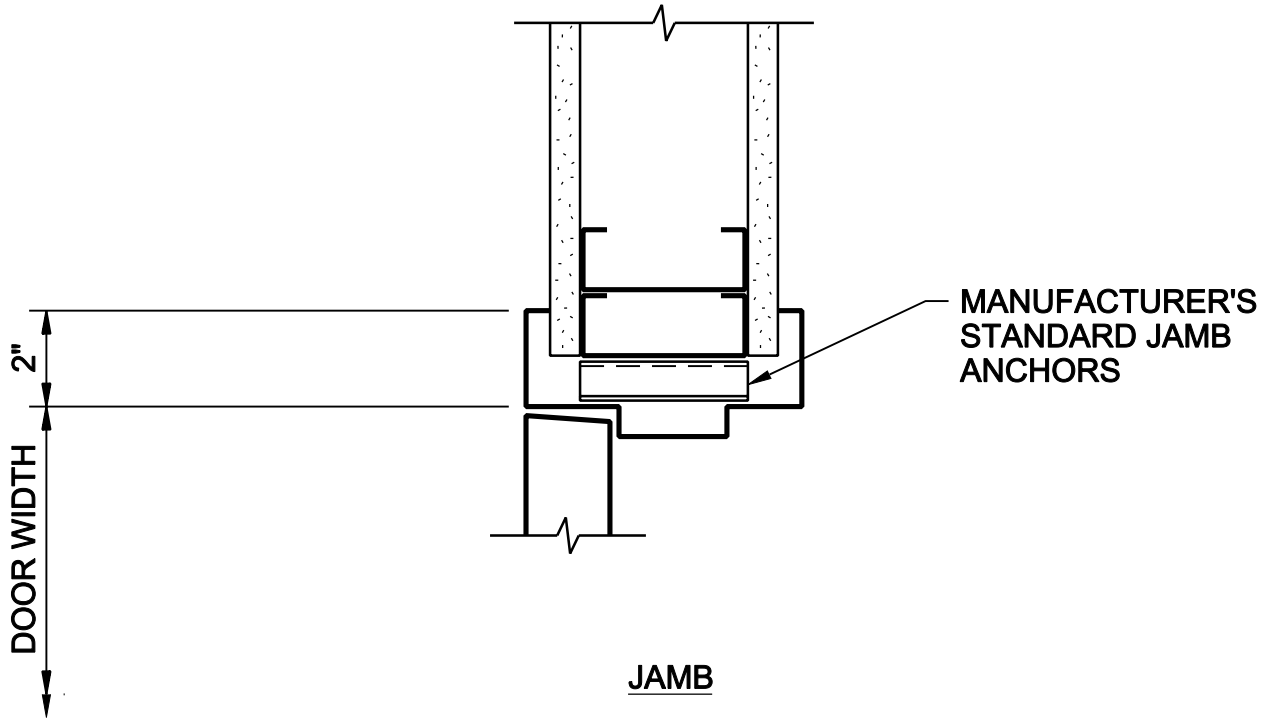

JAMB

DOOR HEAD AND JAMB

3" = 1'-0"

EASTERN MUNICIPAL WATER DISTRICT
PERRIS II DESALINATION FACILITY

0811-033

CH2MHILL