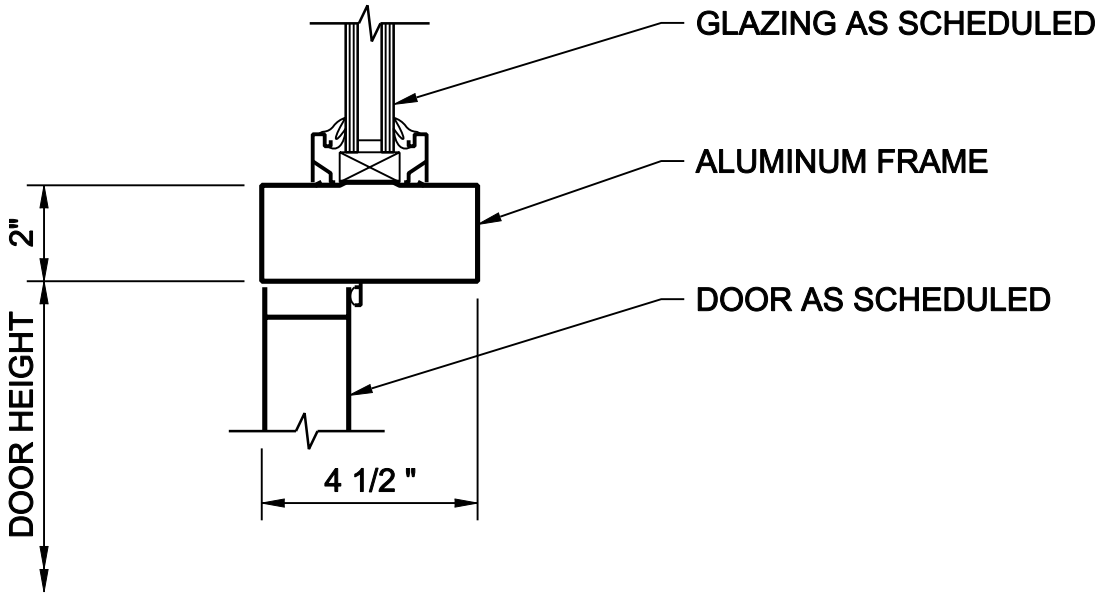

DOOR HEAD / TRANSOM

3" = 1'-0"

EASTERN MUNICIPAL WATER DISTRICT
PERRIS II DESALINATION FACILITY

0841-008

CH2MHILL