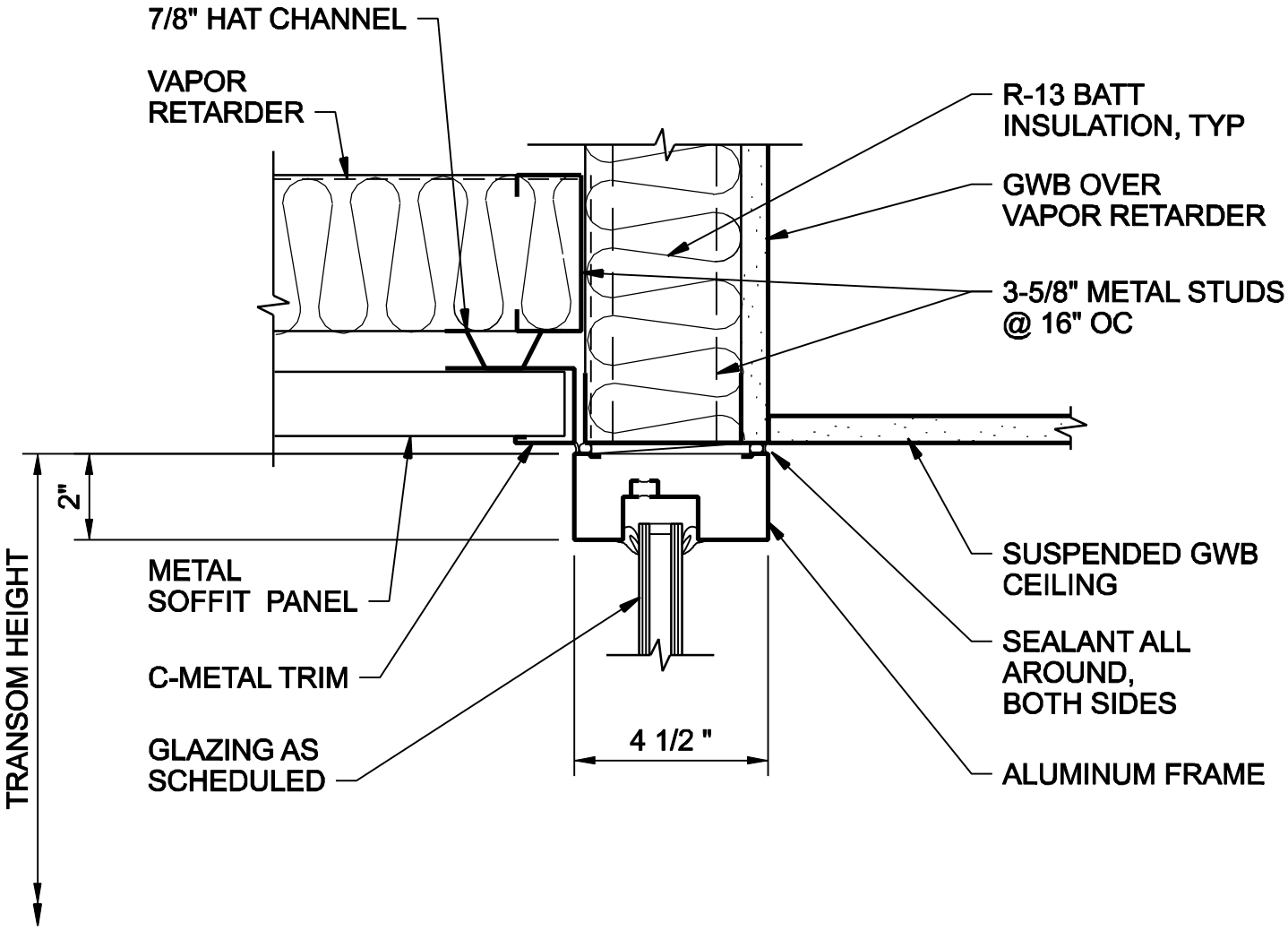

TRANSOM HEAD

3" = 1'-0"

EASTERN MUNICIPAL WATER DISTRICT
PERRIS II DESALINATION FACILITY

0841-105

CH2MHILL