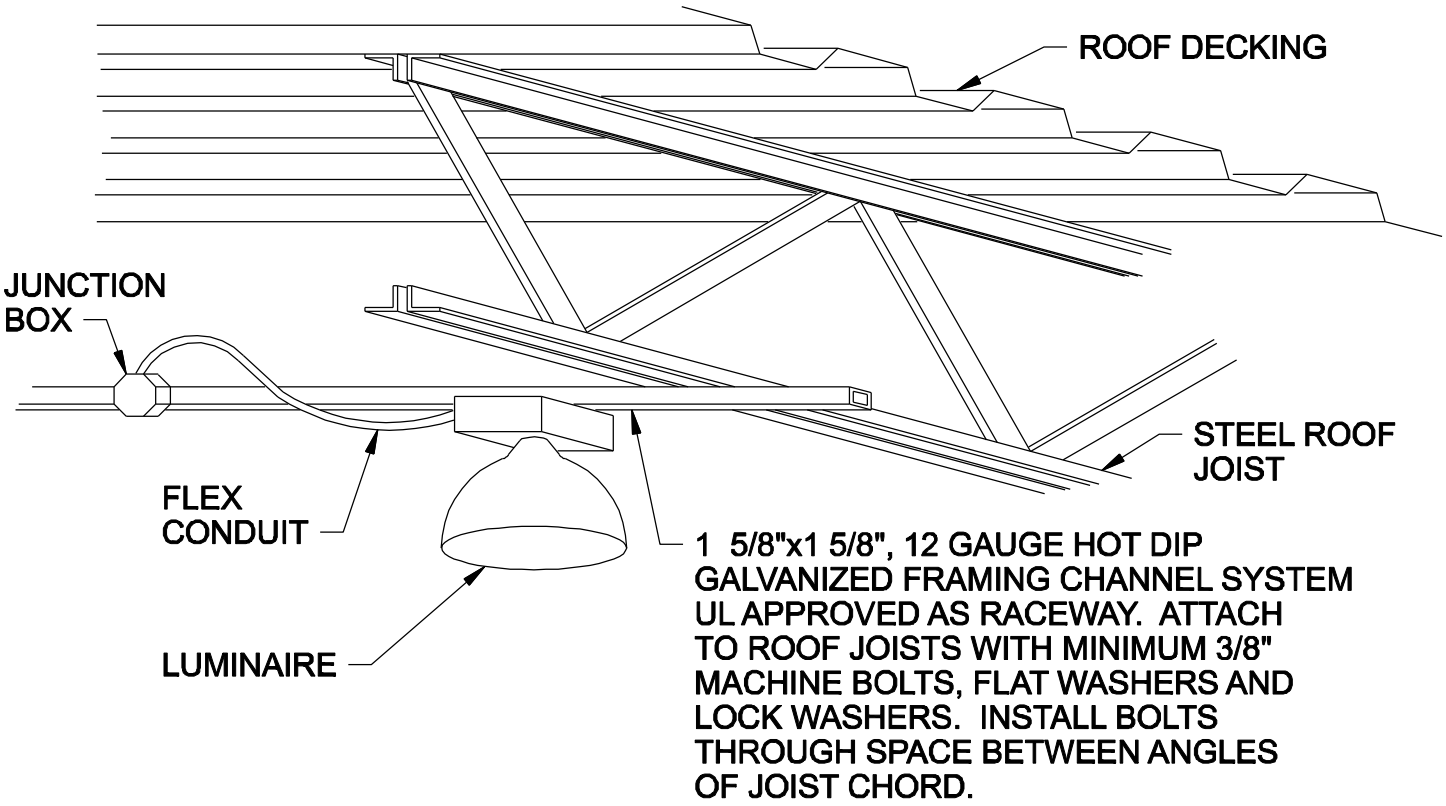

LUMINAIRE MOUNTING

NTS

© CH2M HILL