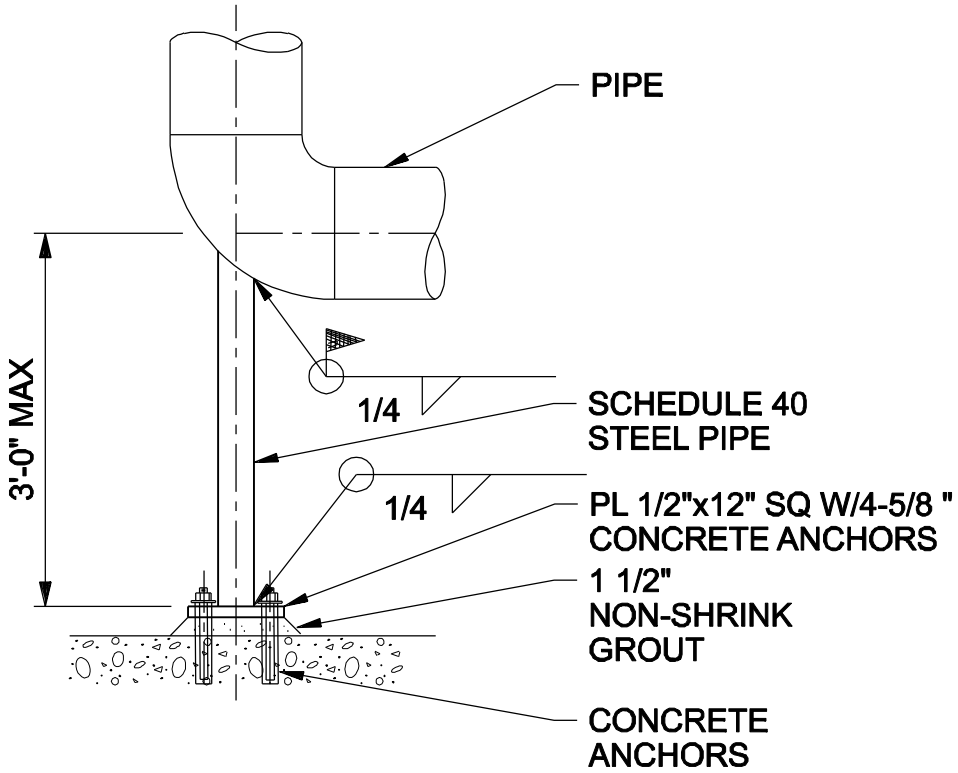

PIPE DIAMETER	SUPPORT DIAMETER	PLATE THICKNESS	ANCHOR BOLT DIAMETER
3"	2 1/2"	3/8"	3/8"
4" THRU 12"	3"	3/8"	1/2"
14" AND 16"	4"	3/8"	1/2"
18" AND 20"	6"	1/2"	5/8"

PIPE SUPPORT

NTS

© CH2M HILL