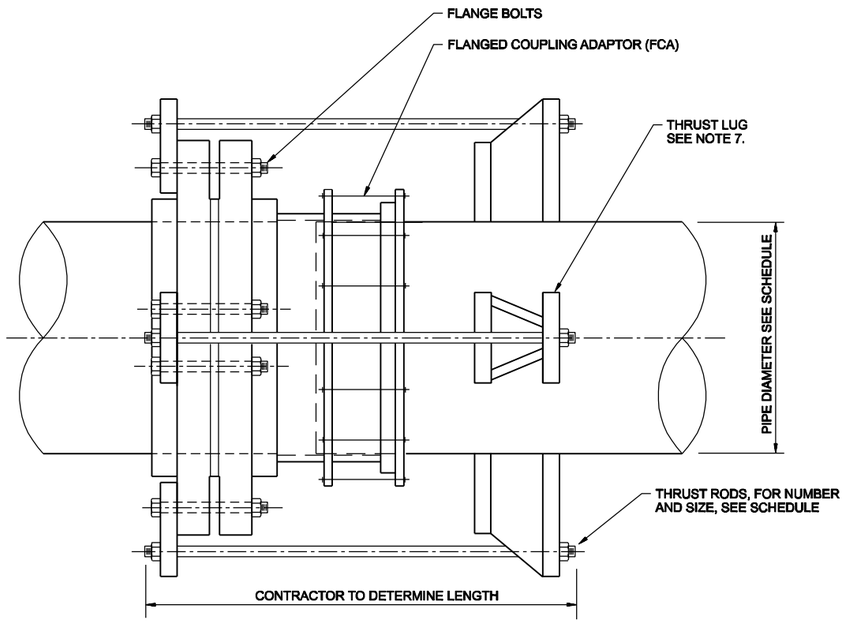

PLAN

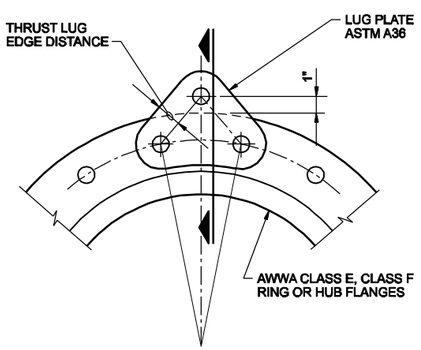

FRONT ELEVATION

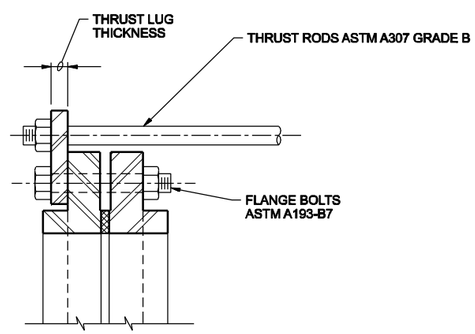

LUG

NOTES:

1. THRUST RODS SHALL CONFORM TO ASTM A307 GRADE B. NUTS SHALL CONFORM TO ASTM A563.
2. LUG PLATES SHALL CONFORM TO ASTM A36.
3. THRUST ROD NUTS SHALL BE TIGHTENED GRADUALLY AND EQUALLY IN STAGES TO PREVENT UNEVEN ALIGNMENT AND TO ALLOW EQUAL STRESS ON ALL RODS UNDER PRESSURE. TIGHTEN UNTIL SNUG. THREADS SHALL PROTRUDE FROM NUTS. PEEN THREADS AFTER TIGHTENING NUTS.
4. LUG PLATES SHALL BE EQUALLY SPACED AROUND PIPE.
5. PROVIDE CATHODIC PROTECTION FOR COUPLINGS AS NOTED ON PLANS OR IN THE SPECIFICATIONS.
6. CONTRACTOR SHALL USE SCHEDULE DATA FOR ONLY THOSE PIPE SIZES AND TEST PRESSURES SPECIFIED IN THIS CONTRACT.
7. FOR THRUST LUG DIMENSIONS SEE LUG SCHEDULE ON DETAIL 15540. ADJUST HEIGHT OF THRUST ROD LUG SO THAT THRUST ROD IS PARALLEL TO PIPE AXIS.

IF YOU HAVE A PIPE SIZE OR PRESSURE NOT IN THE TABLE, CONTACT CHRIS SUNDBERG/SEA AND THE CALCS AND SCHEDULE WILL BE PROVIDED.

THRUST ROD AND LUG PLATE SCHEDULE

WORKING PRESSURE (PSI)	AWWA C207 FLANGE CLASS	NUMBER OF THRUST RODS	PUBLISHED FLANGE THICKNESS (IN)	REQ'D RING FLANGE THICKNESS (IN)	THRUST ROD DIA. (IN)	THRUST ROD FORCE (KIPS)	THRUST LUG THICKNESS (IN)	THRUST LUG EDGE DISTANCE (IN)	REQ'D FLANGE BOLT SPEC
100	6" Class E	4	1.31	0.67	0.63	1.2	0.25	1.50	A 193, B7
100	6" Class F	6	1.31	0.75	0.63	1.0	0.25	1.50	A 193, B7
100	8" Class E	4	1.50	0.80	0.63	2.0	0.38	1.50	A 193, B7
100	8" Class F	6	1.31	0.87	0.63	1.5	0.38	1.50	A 193, B7
100	10" Class E	6	1.56	0.83	0.63	2.0	0.38	1.50	A 193, B7
100	10" Class F	8	1.50	0.99	0.63	1.7	0.38	1.50	A 193, B7
100	12" Class E	6	1.75	1.08	0.63	3.0	0.38	1.50	A 193, B7
100	12" Class F	8	1.63	1.13	0.63	2.4	0.38	1.53	A 193, B7
100	14" Class E	6	1.88	1.17	0.63	3.5	0.38	1.50	A 193, B7
100	14" Class F	10	1.94	1.26	0.63	2.5	0.38	1.53	A 193, B7
100	16" Class E	6	2.00	1.30	0.63	3.6	0.38	1.50	A 193, B7
100	16" Class F	10	2.14	1.37	0.63	3.1	0.38	1.69	A 193, B7
100	18" Class E	8	2.13	1.37	0.63	4.2	0.50	1.53	A 193, B7
100	18" Class F	12	2.25	1.49	0.63	3.2	0.50	1.69	A 193, B7
100	20" Class E	10	2.38	1.49	0.63	4.1	0.50	1.53	A 193, B7
100	20" Class F	12	2.33	1.61	0.63	3.9	0.50	1.69	A 193, B7
100	22" Class E	10	2.50	1.58	0.63	4.9	0.50	1.69	A 193, B7
100	22" Class F	12	2.50	1.72	0.63	4.7	0.50	1.69	A 193, B7
100	24" Class E	10	2.63	1.70	0.63	5.8	0.50	1.69	A 193, B7
100	24" Class F	12	2.69	1.85	0.63	5.6	0.50	2.00	A 193, B7
100	30" Class E	14	2.88	2.02	0.75	6.3	0.50	1.69	A 193, B7
100	30" Class F	14	3.15	2.16	0.75	7.3	0.50	2.31	A 193, B7
100	36" Class E	16	3.13	2.34	0.75	7.9	0.63	2.00	A 193, B7
100	36" Class F	16	3.46	2.46	0.88	8.9	0.50	2.63	A 193, B7
100	42" Class E	18	3.38	2.65	0.88	9.5	0.63	2.00	A 193, B7
100	42" Class F	18	3.81	2.76	0.88	10.5	0.63	2.63	A 193, B7
100	48" Class E	20	3.50	2.93	0.88	10.1	0.63	2.00	A 193, B7
100	48" Class F	20	4.50	3.08	1.00	12.8	0.63	2.63	A 193, B7
200	6" Class E	4	1.31	0.95	0.63	2.5	0.38	1.50	A 193, B7
200	6" Class F	6	1.31	1.06	0.63	2.1	0.38	1.50	A 193, B7
200	8" Class E	4	1.50	1.14	0.63	4.0	0.50	1.50	A 193, B7
200	8" Class F	6	1.31	1.24	0.63	3.2	0.38	1.50	A 193, B7
200	10" Class E	6	1.56	1.32	0.63	4.1	0.50	1.50	A 193, B7
200	10" Class F	8	1.50	1.40	0.63	3.4	0.50	1.50	A 193, B7
200	12" Class E	6	1.75	1.53	0.63	6.0	0.50	1.50	A 193, B7
200	12" Class F	8	1.63	1.59	0.63	4.7	0.50	1.53	A 193, B7
200	14" Class E	6	1.88	1.66	0.75	7.3	0.63	1.50	A 193, B7
200	14" Class F	10	1.94	1.78	0.63	5.0	0.50	1.53	A 193, B7
200	16" Class E	6	2.00	1.83	0.75	7.2	0.63	1.50	A 193, B7
200	16" Class F	10	2.14	1.94	0.75	6.3	0.63	1.69	A 193, B7
200	18" Class E	8	2.13	1.94	0.75	8.3	0.63	1.53	A 193, B7
200	18" Class F	12	2.25	2.11	0.75	6.5	0.63	1.69	A 193, B7
200	20" Class E	10	2.38	2.11	0.75	8.2	0.63	1.53	A 193, B7
200	20" Class F	12	2.33	2.27	0.75	7.8	0.63	1.69	A 193, B7
200	22" Class E	10	2.50	2.24	0.88	9.7	0.63	1.69	A 193, B7
200	22" Class F	12	2.50	2.44	0.88	9.3	0.75	1.69	A 193, B7
200	24" Class E	10	2.63	2.41	0.88	11.6	0.75	1.69	A 193, B7
200	24" Class F	12	2.69	2.62	0.88	11.1	0.75	2.00	A 193, B7
200	30" Class E	14	2.88	2.86	1.00	12.6	0.75	1.69	A 193, B7
200	30" Class F	14	3.15	3.05	1.00	14.6	0.75	2.31	A 193, B7
200	36" Class E	16	3.13	3.31	1.13	16.7	0.75	2.00	A 193, B7
200	36" Class F	16	3.46	3.47	1.13	17.7	0.75	2.63	A 193, B7
200	42" Class E	18	3.38	3.75	1.13	19.0	0.88	2.00	A 193, B7
200	42" Class F	18	3.81	3.90	1.25	21.1	0.88	2.63	A 193, B7
200	48" Class E	20	3.50	4.14	1.25	20.2	0.88	2.00	A 193, B7
200	48" Class F	20	4.50	4.35	1.38	25.5	0.88	2.63	A 193, B7
300	6" Class E	4	1.31	1.16	0.63	3.7	0.50	1.50	A 193, B7
300	6" Class F	6	1.31	1.30	0.63	3.1	0.50	1.50	A 193, B7
300	8" Class E	4	1.50	1.39	0.63	6.1	0.50	1.50	A 193, B7
300	8" Class F	6	1.31	1.51	0.63	4.8	0.50	1.50	A 193, B7
300	10" Class E	6	1.56	1.62	0.63	6.1	0.50	1.50	A 193, B7
300	10" Class F	8	1.50	1.72	0.63	5.1	0.50	1.50	A 193, B7
300	12" Class E	6	1.75	1.88	0.88	9.0	0.63	1.50	A 193, B7
300	12" Class F	8	1.63	1.95	0.75	7.1	0.63	1.53	A 193, B7
300	14" Class E	6	1.88	2.03	0.88	10.9	0.75	1.50	A 193, B7
300	14" Class F	10	1.94	2.18	0.75	7.5	0.63	1.53	A 193, B7
300	16" Class E	8	2.00	2.24	0.88	10.8	0.75	1.50	A 193, B7
300	16" Class F	10	2.14	2.38	0.88	9.4	0.63	1.69	A 193, B7
300	18" Class E	8	2.13	2.38	1.00	12.5	0.75	1.53	A 193, B7
300	18" Class F	12	2.25	2.58	0.88	9.7	0.75	1.69	A 193, B7
300	20" Class E	10	2.38	2.59	1.00	12.2	0.75	1.53	A 193, B7
300	20" Class F	12	2.33	2.78	0.88	11.7	0.75	1.69	A 193, B7
300	22" Class E	10	2.50	2.74	1.00	14.6	0.75	1.69	A 193, B7
300	22" Class F	12	2.50	2.99	1.00	14.0	0.88	1.69	A 193, B7
300	24" Class E	10	2.63	2.95	1.13	17.3	0.88	2.00	A 193, B7
300	24" Class F	12	2.69	3.21	1.13	16.7	0.88	2.00	A 193, B7
300	30" Class E	14	2.88	3.50	1.13	19.0	0.88	1.69	A 193, B7
300	30" Class F	14	3.15	4.06	1.25	21.8	0.88	2.31	A 193, B7
300	36" Class E	16	3.13	4.26	1.25	23.6	1.00	2.00	A 193, B7
300	36" Class F	16	3.46	2.46	1.38	26.6	0.88	2.63	A 193, B7
300	42" Class E	18	3.38	4.59	1.38	28.5	1.00	2.00	A 193, B7
300	42" Class F	18	3.81	4.78	1.50	31.6	1.00	2.63	A 193, B7
300	48" Class E	22	3.50	5.07	1.50	30.2	1.13	2.00	A 193, B7
300	48" Class F	20	4.50	5.33	1.63	38.3	1.13	2.63	A 193, B7

4005-542

THRUST TIE FOR STEEL PIPE