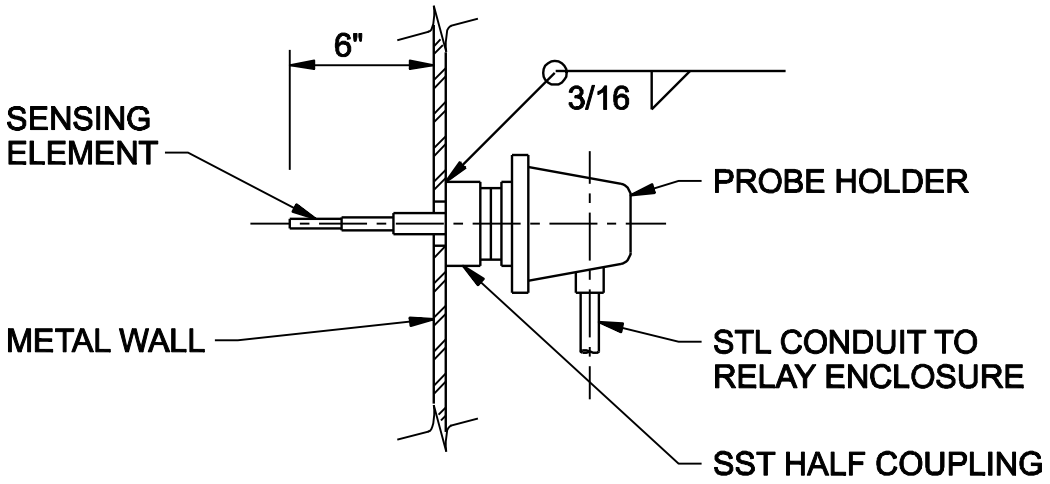

METAL WALL

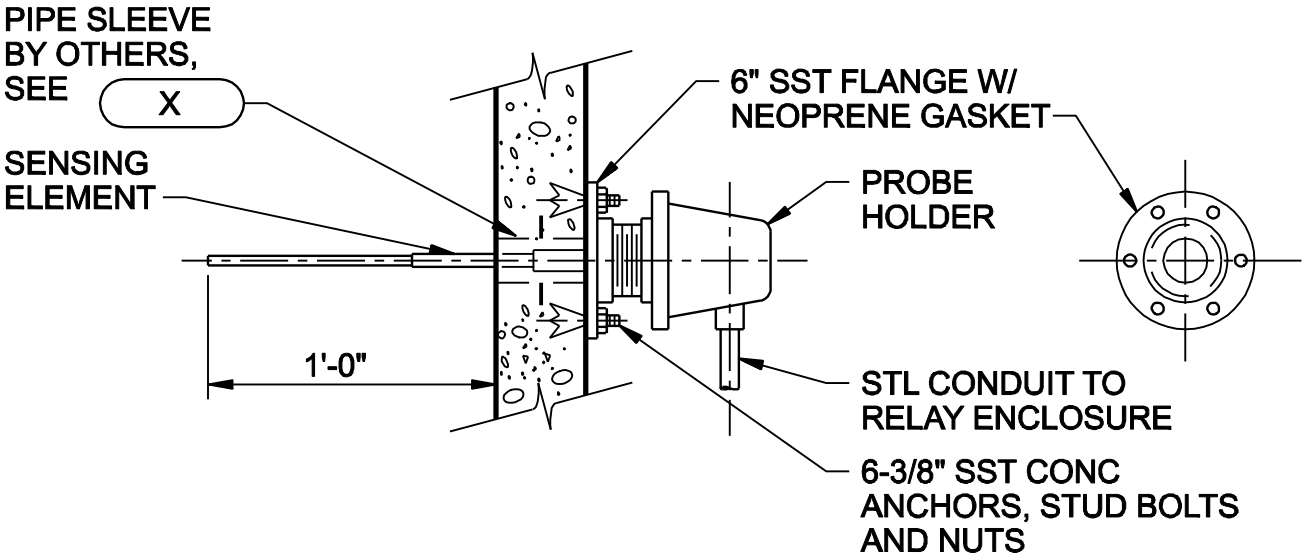

CONCRETE WALL

RIGID PROBE TYPE LEVEL ELEMENT INSTALLATION

NTS

© CH2M HILL

NOTE TO DESIGNER:

4091-256

DATE 30-OCT-84
TDC FOLEY
TDR JUNGHANS
LCT HAMLIN