CITY OF GUADALUPE PUBLIC WORKS DEPARTMENT

CONTRACT DOCUMENTS FOR CONSTRUCTION OF

WASTEWATER TREATMENT PLANT IMPROVEMENT PROJECT
RECORD DRAWING SET - NOVEMBER 2012

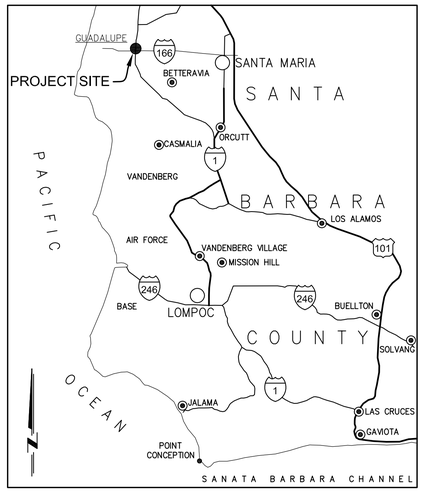

VICINITY MAP

NO SCALE

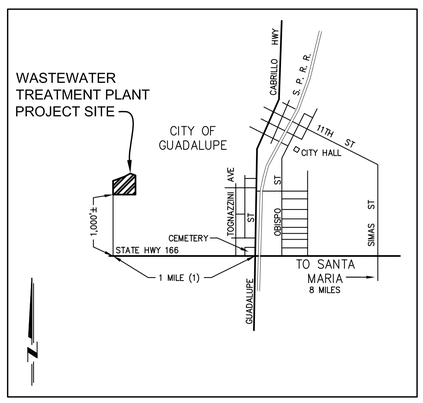

LOCATION MAP

SCALE: 1" = 1,000'

DRAWING INDEX

SHEET	DRAWING	DESCRIPTION
1	G-1	TITLE SHEET, VICINITY MAP AND DRAWING INDEX
2	G-2	ABBREVIATIONS, CIVIL AND MECHANICAL LEGENDS
3	G-3	HYDRAULIC PROFILE
4	G-4	PROCESS FLOW DIAGRAMS
5	G-5	DESIGN CRITERIA AND EQUIPMENT LIST
6	N-1	P&ID LEGEND, ABBREVIATIONS AND GENERAL NOTES
7	N-2	HEADWORKS, INFLUENT PUMP STATION, AND GRIT REMOVAL
8	N-3	BIOLOGICAL TREATMENT SYSTEM AND EFFLUENT MONITORING
9	N-4	SLUDGE HANDLING AND AERATION
10	C-1	EXISTING SITE PLAN AND CONSTRUCTION STAGING
11	C-2	DEMOLITION AND ABANDONMENT PLAN
12	C-3	GRADING PLAN
13	C-4	YARD PIPING
14	C-5	ENLARGED CIVIL PLANS AND SECTIONS
15	C-5A	CITY WATER CONNECTION ENLARGED PLAN DETAIL
16	C-5B	SEWER PIPING PLAN AND PROFILE
17	C-6	CIVIL DETAILS 1
18	C-7	CIVIL DETAILS 2
19	C-8	CONTROL DATA AND CIVIL DETAILS
20	S-1	GENERAL STRUCTURAL NOTES
21	S-1A	GENERAL STRUCTURAL NOTES & DETAILS
22	S-2	GENERAL STRUCTURAL DETAILS
23	S-3	GENERAL STRUCTURAL DETAILS
24	S-4	CLARIFIER PLAN
25	S-5	CLARIFIER SECTIONS
26	S-6	CLARIFIER DETAILS
27	S-7	AERATION PAD PLAN
28	S-8	AERATION PAD SECTIONS
29	S-9	HEADWORKS PLATFORM FRAMING PLAN
30	M-1	HEADWORKS PLAN
31	M-2	HEADWORKS SECTION AND DETAILS
32	M-3	GRIT REMOVAL PLAN
33	M-4	GRIT REMOVAL SECTIONS AND DETAILS
34	M-5	AERATION BASIN PLAN
35	M-6	AERATION BASIN SECTIONS AND DETAILS
36	M-7	CLARIFIER PLAN AND SECTIONS
37	M-8	CLARIFIER SECTIONS AND DETAILS
38	M-9	AERATION AND SLUDGE DEWATERING ALCOVE PLAN
39	M-10	AERATION AND SLUDGE DEWATERING ALCOVE SECTIONS
40	M-11	MECHANICAL DETAILS 1
41	M-12	MECHANICAL DETAILS 2
42	E-1	STANDARD ELECTRICAL SYMBOLS AND ABBREVIATIONS
43	E-2	PARTIAL ELECTRICAL SITE PLAN
44	E-3	SINGLE LINE DIAGRAMS
45	E-4	HEADWORKS ELECTRICAL PLAN
46	E-5	GRIT REMOVAL ELECTRICAL PLAN
47	E-6	AERATION AND SLUDGE DEWATERING ELECTRIC PLANS
48	E-7	SCHEDULES
49	E-8	DETAILS
50	E-9	CONTROLS/SCHEDULES

RECORD DRAWING

I HEREBY CERTIFY THAT TO THE BEST OF MY KNOWLEDGE AND BELIEF, THE IMPROVEMENTS SHOWN ON THIS SET OF PLANS (SHEET 1 THROUGH SHEET 50) HAVE BEEN INSTALLED AND CONSTRUCTED IN SUBSTANTIAL CONFORMANCE WITH SAID PLANS, ALL APPROPRIATE STANDARDS AND ANY DISCRETIONARY APPROVAL (S) FOR THE PROJECT.

SIGNED Tom Falk DATE 11/14/2012

PRINTED NAME TOM FALK P.E. NO. 069780

DISCIPLINE CIVIL MY REGISTRATION EXPIRES 6/30/2014

PROJECT OWNER

CITY OF GUADALUPE PUBLIC WORKS DEPARTMENT
GUADALUPE CITY HALL
918 OBISPO STREET
GUADALUPE, CA 93434
805-356-3891

BENCHMARK

LOCAL BENCHMARK ADJUSTED TO SITE PLANS OF THE GUADALUPE WWTP DATED 5/17/2002

MANHOLE AS SHOWN ON DWG C-1, TOP OF RIM ELEVATION 67.57

BASIS OF BEARINGS

THE BASIS OF BEARINGS FOR THIS PROJECT IS THE SOUTHERLY LINE OF THE TREATMENT PLANT, NOTED AS N89°50'54"W

MONUMENTS FOUND IN FIELD ON SAID SOUTHERLY LINE ARE SHOWN ON DWG C-1

M1: 3/4" IRON PIPE LS 3146 N2238.89, E8176.23
M2: 3/4" IRON PIPE LS 3146 N2236.98, E8901.12

FACILITY ADDRESS

5125 WEST MAIN STREET
GUADALUPE, CA. 93434

DECLARATION OF RESPONSIBLE CHARGE

I HEREBY DECLARE THAT I AM THE ENGINEER OF WORK FOR THIS PROJECT, THAT I HAVE EXERCISED RESPONSIBLE CHARGE OVER THE DESIGN OF THE PROJECT AS DEFINED IN SECTION 6703 OF THE BUSINESS AND PROFESSIONS CODE AND THAT THE DESIGN IS CONSISTENT WITH CURRENT STANDARDS.

I UNDERSTAND THAT THE CHECK OF PROJECT DRAWINGS AND SPECIFICATIONS BY THE CITY OF GUADALUPE IS CONFINED TO REVIEW ONLY AND DOES NOT RELIEVE ME, AS ENGINEER OF WORK, OF MY RESPONSIBILITIES FOR PROJECT DESIGN.

DUDEK & ASSOCIATES 605 THIRD ST ENCINITAS, CA. 92024

Tom Falk
TOM FALK R.C.E. 069780
EXPIRES 6/30/2012

7/01/2011
DATE

Underground Service Alert
CALL BEFORE YOU DIG
Call: TOLL FREE
1-800
227-2600
TWO WORKING DAYS BEFORE YOU DIG

REV	DESCRIPTION	ENGR	DATE	APPD	DATE
1	AS-BUILT	TF/MH	11/2012		

PROGRESS: RECORD DRAWINGS
SUBMITTAL DATE: 11/14/2012
PROJECT MANAGER: T. FALK
DESIGNED BY: K.L.B, A.E.G, M.D.H
DRAWN BY: K.K, C.S, N.H
CHECKED BY: S. DEERING

REGISTERED PROFESSIONAL ENGINEER TOM C. FALK CIVIL STATE OF CALIFORNIA Exp. 6/30/12

PLANS PREPARED BY:
DUDEK
605 Third Street Encinitas, CA 92024
760.942.5147 Fax 760.942.4508

City of Guadalupe
Public Works Dept.
918 Obispo Street, Guadalupe, California 93434
Tel 805-356-3891 Fax 805-343-5512

WASTEWATER TREATMENT PLANT IMPROVEMENT PROJECT

TITILE SHEET, VICINITY MAP, AND DRAWING INDEX

DWG. G-1
PROJECT NO. 6576
SHT. NO. 1 OF 50

P:\101.Engineering\Guadalupe, City of\6576-Wastewater Treatment Plant\6 Design Data\CAD6576\dwg\As-Builts 8-23-12\6576 SH01 G-1 11/14/2012 11:51 AM

GENERAL NOTES

1. PROJECT DOCUMENTS: ALL WORK SHALL BE DONE IN CONFORMANCE WITH (IN ORDER OF PRIMACY) THESE PLANS, THE CONTRACT SPECIFICATIONS, THE TECHNICAL SPECIFICATIONS, PRE-APPROVED EQUIPMENT SUBMITTALS, THE UNIFORM BUILDING CODE, LATEST EDITION, THE FIRE CODE, LATEST EDITION, AND, WHERE APPLICABLE, THE STANDARD SPECIFICATIONS FOR PUBLIC WORKS CONSTRUCTION (GREENBOOK), LATEST EDITION.

2. CONTRACTOR'S WARRANTY: THE CONTRACTOR SHALL GUARANTEE ALL WORK FOR A PERIOD OF ONE YEAR AFTER THE DATE OF FINAL ACCEPTANCE BY THE CITY. ANY WORK THAT MAY PROVE DEFECTIVE IN WORKMANSHIP AND/OR MATERIALS WITHIN THE WARRANTY PERIOD SHALL BE REPAIRED OR REPLACED ALONG WITH ANY OTHER WORK WHICH MAY BE DAMAGED OR DISPLACED DURING THE PERFORMANCE OF WARRANTY WORK WITH NO ADDITIONAL EXPENSE TO THE CITY.

3. APPLICABLE LAWS: CONTRACTOR SHALL COMPLY WITH ALL APPLICABLE GOVERNMENTAL AND LOCAL LAWS, REGULATIONS, AND ORDINANCES WITH REGARD TO TRAFFIC SAFETY, WORK HOURS, OPERATING HOURS, NOISE AND AIR POLLUTION, AND SANITARY CONDITIONS.

4. PERMITS: CONTRACTOR SHALL OBTAIN ALL PERMITS REQUIRED FOR COMPLETION OF THE WORK.

5. DIMENSIONS AND ELEVATIONS: LOCATION, DIMENSION, AND ELEVATION OF IMPROVEMENTS TO BE MET BY WORK OF THIS CONTRACT SHALL BE CONFIRMED BY FIELD MEASUREMENTS PRIOR TO CONSTRUCTION OF NEW WORK, INCLUDING PROCUREMENT. ALL DISCREPANCIES SHALL BE REPORTED TO THE ENGINEER WITHIN EIGHT HOURS.

6. SAFETY:

   A. CONTRACTOR SHALL ASSUME SOLE AND COMPLETE RESPONSIBILITY FOR JOB SITE CONDITIONS DURING THE COURSE OF CONSTRUCTION INCLUDING SAFETY OF ALL PERSONS AND PROPERTY. THIS REQUIREMENT IS NOT LIMITED TO NORMAL WORKING HOURS. THE CONTRACTOR SHALL DEFEND, INDEMNIFY, AND HOLD THE CITY AND THE ENGINEER HARMLESS FROM ANY AND ALL LIABILITY, REAL OR ALLEGED IN CONNECTION WITH THE PERFORMANCE OF THIS WORK, EXCEPTING LIABILITY ARISING FROM THE SOLE NEGLIGENCE OF THE CITY OR THE ENGINEER.

   B. CONTRACTOR SHALL COMPLY WITH THE REGULATIONS OF THE "GENERAL CONSTRUCTION SAFETY ORDERS" AND "TRENCH CONSTRUCTION SAFETY ORDERS", STATE OF CALIFORNIA, DEPARTMENT OF INDUSTRIAL RELATIONS, DIVISION OF OCCUPATIONAL HEALTH AND SAFETY (CAL-OSHA). CONTRACTOR SHALL PRESENT EVIDENCE OF COMPLIANCE INCLUDING PERMITS FOR TRENCHING OVER FIVE FEET IN DEPTH TO THE CITY PRIOR TO CONSTRUCTION.

   C. CONTRACTOR IS ADVISED OF CITY POLICY ON CONFINED SPACE ENTRY WHICH IS INCLUDED IN THE PROJECT TECHNICAL SPECIFICATIONS. CONTRACTOR SHALL COMPLY ALL REQUIREMENTS OF THAT POLICY.

7. PRESERVING MONUMENTS AND BENCHMARKS: THE CONTRACTOR SHALL BE RESPONSIBLE FOR ANY MONUMENTATION AND/OR BENCHMARKS DISTURBED OR DESTROYED BY CONSTRUCTION. SUCH POINTS SHALL BE REFERENCED AND REPLACED WITH APPROPRIATE MONUMENTATION BY A LICENSED SURVEYOR OR REGISTERED CIVIL ENGINEER AUTHORIZED TO PRACTICE LAND SURVEYING IN THE STATE OF CALIFORNIA. A CORNER RECORD OR RECORD OF SURVEY, AS APPROPRIATE SHALL BE FILED AS REQUIRED BY THE LAND SURVEYOR'S ACT.

GENERAL NOTES (CONTINUED)

8. AS-BUILT DRAWINGS:

   A. THE CONTRACTOR SHALL MAINTAIN CURRENT BLACKLINE DRAWINGS DURING CONSTRUCTION NEATLY MARKED IN RED INK TO REFLECT THE AS-BUILT CONDITIONS. CONTRACTOR SHALL MAKE UPDATES TO THE AS-BUILT DRAWINGS ON A DAILY BASIS. AS-BUILT DOCUMENTS SHALL BE MAINTAINED ON SITE AT ALL TIMES.

   B. AS-BUILT DRAWINGS SHALL INCLUDE ANY DEVIATION FROM PLANS INCLUDING PIPELINE LINE AND GRADE AND SUB-GRADE UTILITY LOCATIONS AND SIZE.

   C. CURRENT AS-BUILT DRAWINGS SHALL BE A CONDITION OF MONTHLY PROGRESS PAYMENT. CONTRACTOR SHALL REVIEW AS-BUILT DRAWINGS WITH THE CITY PRIOR TO SUBMITTING PROGRESS PAYMENT REQUEST.

   D. AS-BUILT DRAWINGS SHALL BE SUBMITTED TO THE CITY FOR APPROVAL PRIOR TO RELEASE OF RETENTION.

9. JOB-SITE CONDITIONS:

   A. UPON COMPLETION OF EACH DAY'S WORK, THE CONTRACTOR SHALL BE RESPONSIBLE FOR LEAVING THE WORK AREA SECURE AND FREE OF HAZARDS. THE CONTRACTOR SHALL PROVIDE NECESSARY TEMPORARY SIGNS, WARNING DEVICES, AND BARRICADES. TEMPORARY ACCESS SHALL BE PROVIDED TO ALL ADJACENT PROCESSES DURING NON-CONSTRUCTION HOURS.

   B. THE EXISTING FACILITY MUST REMAIN IN OPERATION FOR THE DURATION OF THE WORK. THE CONTRACTOR SHALL COORDINATE ALL ON-SITE ACTIVITIES WITH THE CITY'S OPERATIONS STAFF. ACCESS SHALL BE PROVIDED FOR OPERATIONS AND MAINTENANCE PURPOSES.

   C. THE CONTRACTOR SHALL PROTECT ALL EXPOSED AREAS OF THE SITE DURING THE CONSTRUCTION PERIOD AGAINST DAMAGE. ANY AND ALL SITE DAMAGE FROM THE CONTRACTOR'S ACTIVITIES SHALL BE REPAIRED BY THE CONTRACTOR AS DIRECTED BY THE CITY.

   D. CONTRACTOR SHALL PROVIDE MINIMUM 7-DAYS NOTICE FOR ANY TIE-INS OR SHUT-DOWNS REQUIRED FOR EXECUTION OF WORK.

ABBREVIATIONS

ABND	ABANDONED
ADF	AVERAGE DAILY FLOW
CHNL	CHANNEL
CL	CENTER LINE
DTL	DETAIL
DWG	DRAWING
EL	ELEVATION
EX, (E)	EXISTING
FT	FEET
FUT, (F)	FUTURE
GPM	GALLONS PER MINUTE
GRD	GROUND
HWL	HIGH WATER LEVEL
ID	INNER DIAMETER
IE	INVERT ELEVATION
LWL	LOW WATER LEVEL
MAX	MAXIMUM
MGD	MILLION GALLONS PER DAY
MIN	MINIMUM
N/A	NOT AVAILABLE
NC	NORMALLY CLOSED
NO.	NUMBER
OD	OUTER DIAMETER
PHF	PEAK HOUR FLOW
Q	FLOW
SCH	SCHEDULE
TOW	TOP OF WALL
TYP	TYPICAL
W/	WITH

PIPING SYMBOLS

- EXISTING PIPE
- NEW PIPE (ABOVE GROUND)
- NEW PIPE (BELOW GROUND)
- EXISTING PIPE TO BE REMOVED OR ABANDONED (AS NOTED)
- FLANGED JOINT
- MECHANICAL JOINT
- GROOVED END JOINT (VICTAULIC COUPLING)
- WELDED JOINT
- SLEEVE TYPE MECHANICAL COUPLING

FITTING SYMBOLS

FITTINGS SHOWN WITH FLANGED JOINTS

- 90° ELBOW
- 90° ELBOW UP
- 90° ELBOW DOWN
- 45° ELBOW
- 45° ELBOW UP
- 45° ELBOW DOWN
- TEE
- TEE UP
- TEE DOWN
- CROSS
- LATERAL WYE
- LATERAL WYE DOWN
- LATERAL WYE UP
- CONCENTRIC REDUCER
- ECCENTRIC REDUCER

SURFACE IMPROVEMENT SYMBOLS

- A.C. PAVEMENT PER DTL 3, DWG C-6
- GRAVEL ROADWAY PER DTL 4, DWG C-6
- SLOPE TO DRAIN DIRECTION

VALVE SYMBOLS

VALVES SHOWN WITH FLANGED JOINTS

- PLUG VALVE
- BALL VALVE
- CHECK VALVE (ARROW INDICATES FLOW DIRECTION)
- GATE VALVE
- BUTTERFLY VALVE
- M — MOTOR OPERATED VALVE (BUTTERFLY VALVE SHOWN)

PIPE AND EQUIPMENT DESIGNATION

VALVE CALL OUT — V-201 — VALVE NUMBER, SEE VALVE SCHEDULE(S), SPEC SECTION 15100A

EQUIPMENT CALL OUT — MX-201
- EQUIPMENT NUMBER, SEE SCHEDULE(S) IN SPECIFICATIONS
- EQUIPMENT TYPE, SEE DWG G-5

PIPING CALL OUT — 6" EF ##
- PIPE ID, SEE PIPE SCHEDULE, SPEC SECTION 15051A
- PIPING SERVICE ABBREVIATION, SEE DWG G-4
- NOMINAL PIPE SIZE (F) PREFIX DENOTES FUTURE

6" EF ## — EXISTING

CHANGE IN PIPING MATERIAL

CROSS REFERENCING SYSTEM

(1) A SECTION CUT ON A DRAWING IS IDENTIFIED AS FOLLOWS:

DIRECTION OF VIEW — A / M-4
- SECTION LETTER
- DRAWING WHERE SECTION IS DETAILED

(2) THE SECTION IS IDENTIFIED AS FOLLOWS:

SECTION A / M-3
NOT TO SCALE
- SECTION LETTER
- DRAWING ON WHICH SECTION WAS CUT

(3) DETAILS ARE CROSS REFERENCED IN A SIMILAR MANNER TO THAT OF SECTIONS EXCEPT DETAILS ARE ASSIGNED NUMBERS RATHER THAN LETTERS.

DETAIL 1 / -
NOT TO SCALE
- DETAIL NUMBER
- INDICATES THAT DETAIL OR SECTION IS SHOWN ON SAME SHEET AS CALLED OUT

RECORD DRAWING

THIS RECORD DRAWING IS NOT WARRANTED BUT IS BELIEVED TO REPRESENT CONDITIONS UPON COMPLETION OF CONSTRUCTION WITHIN REASONABLE TOLERANCES, BASED UPON THE INFORMATION FURNISHED TO THE ENGINEER PERTAINING TO CHANGES MADE DURING CONSTRUCTION.

REV	DESCRIPTION	ENGR	DATE	APPD	DATE
1	AS-BUILT	TF/MH	11/2012		

PROGRESS: RECORD DRAWINGS
SUBMITTAL DATE: 11/14/2012
PROJECT MANAGER: T. FALK
DESIGNED BY: K.L.B, A.E.G, M.D.H
DRAWN BY: K.K, C.S, N.H
CHECKED BY: S. DEERING

REGISTERED PROFESSIONAL ENGINEER — TOM C. FALK — Exp. 6/30/12 — CIVIL — STATE OF CALIFORNIA

PLANS PREPARED BY:
DUDEK
605 Third Street Encinitas, CA 92024
760.942.5147 Fax 760.942.4508

City of Guadalupe
Public Works Dept.
918 Obispo Street, Guadalupe, California 93434
Tel 805-356-3891 Fax 805-343-5512

WASTEWATER TREATMENT PLANT IMPROVEMENT PROJECT

ABBREVIATIONS, CIVIL AND MECHANICAL LEGENDS

DWG. G-2
PROJECT NO. 6576
SHT. NO. 2 OF 50

P:\101.Engineering\Guadalupe, City of\6576-Wastewater Treatment Plant\6 Design Data\CAD6576\dwg\As-Builts 8-23-12\6576 SH02 G-2 11/14/2012 11:24 AM

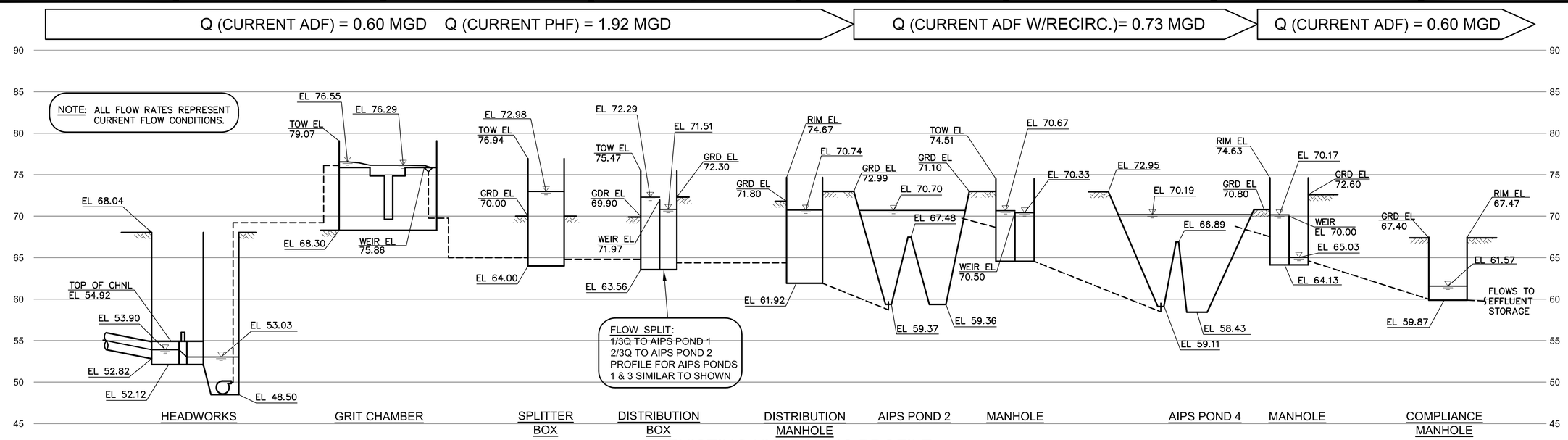

EXISTING HYDRAULIC PROFILE

NOT TO SCALE

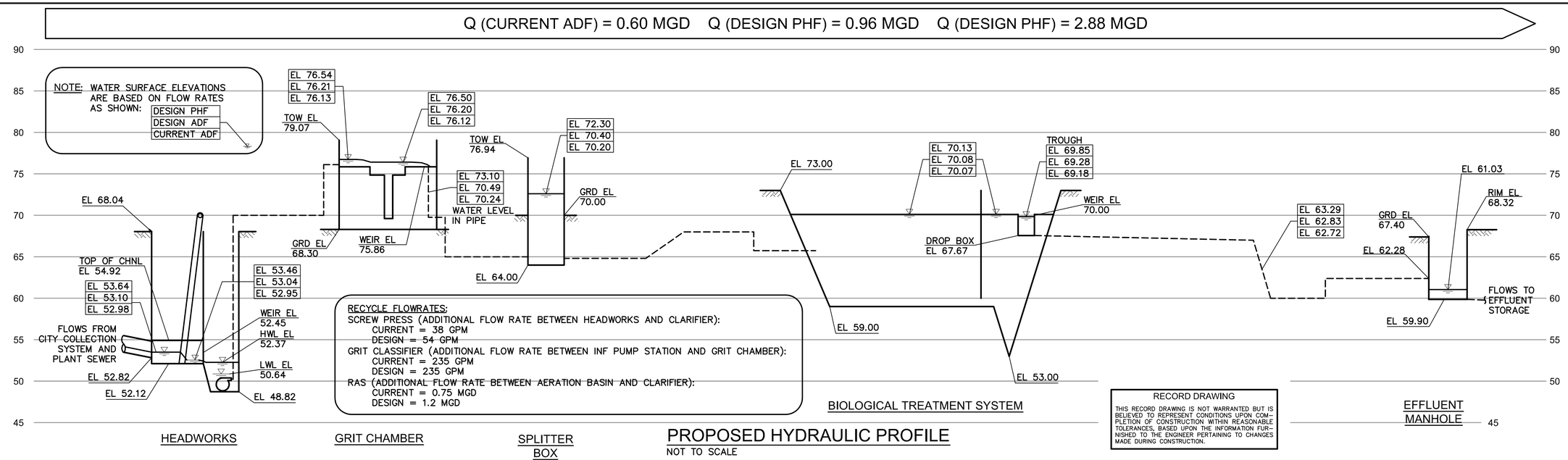

PROPOSED HYDRAULIC PROFILE

NOT TO SCALE

RECORD DRAWING

THIS RECORD DRAWING IS NOT WARRANTED BUT IS BELIEVED TO REPRESENT CONDITIONS UPON COMPLETION OF CONSTRUCTION WITHIN REASONABLE TOLERANCES, BASED UPON THE INFORMATION FURNISHED TO THE ENGINEER PERTAINING TO CHANGES MADE DURING CONSTRUCTION.

REV	DESCRIPTION	ENGR	DATE	APPD	DATE
1	AS-BUILT	TF/MH	11/2012		

PROGRESS: RECORD DRAWINGS
SUBMITTAL DATE: 11/14/2012
PROJECT MANAGER: T. FALK
DESIGNED BY: K.L.B, A.E.G, M.D.H
DRAWN BY: K.K, C.S, N.H
CHECKED BY: S. DEERING

REGISTERED PROFESSIONAL ENGINEER TIM C. FALK Exp. 6/30/12 CIVIL STATE OF CALIFORNIA

PLANS PREPARED BY:
DUDEK
605 Third Street Encinitas, CA 92024
760.942.5147 Fax 760.942.4508

City of Guadalupe
Public Works Dept.
918 Obispo Street, Guadalupe, California 93434
Tel 805-356-3891 Fax 805-343-5512

WASTEWATER TREATMENT PLANT IMPROVEMENT PROJECT

HYDRAULIC PROFILE

DWG. G-3
PROJECT NO. 6576
SHT. NO. 3 OF 50

P:\101.Engineering\Guadalupe, City of\6576-Wastewater Treatment Plant\6 Design Data\CAD6576\dwg\As-Builts 8-23-12\6576 SH03 G-3 11/14/2012 11:24 AM

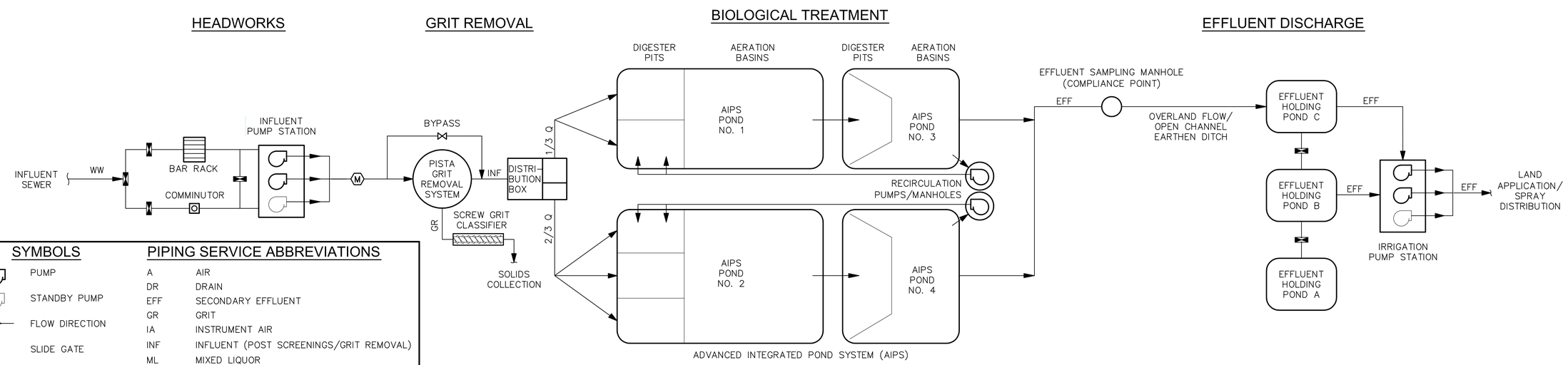

SYMBOLS

- PUMP
- STANDBY PUMP
- FLOW DIRECTION
- SLIDE GATE
- METER
- VALVE
- BLOWER
- STANDBY BLOWER

PIPING SERVICE ABBREVIATIONS

A	AIR
DR	DRAIN
EFF	SECONDARY EFFLUENT
GR	GRIT
IA	INSTRUMENT AIR
INF	INFLUENT (POST SCREENINGS/GRIT REMOVAL)
ML	MIXED LIQUOR
POT	POTABLE WATER
PMR	POLYMER
PW	PLANT WATER
RAS	RETURN ACTIVATED SLUDGE
S	SEWER
SCN	SCREENINGS
SK	SKIMMINGS/SCUM
WAS	WASTE ACTIVATED SLUDGE
WW	WASTEWATER (RAW SEWAGE)

EXISTING PROCESS FLOW DIAGRAM

NOT TO SCALE

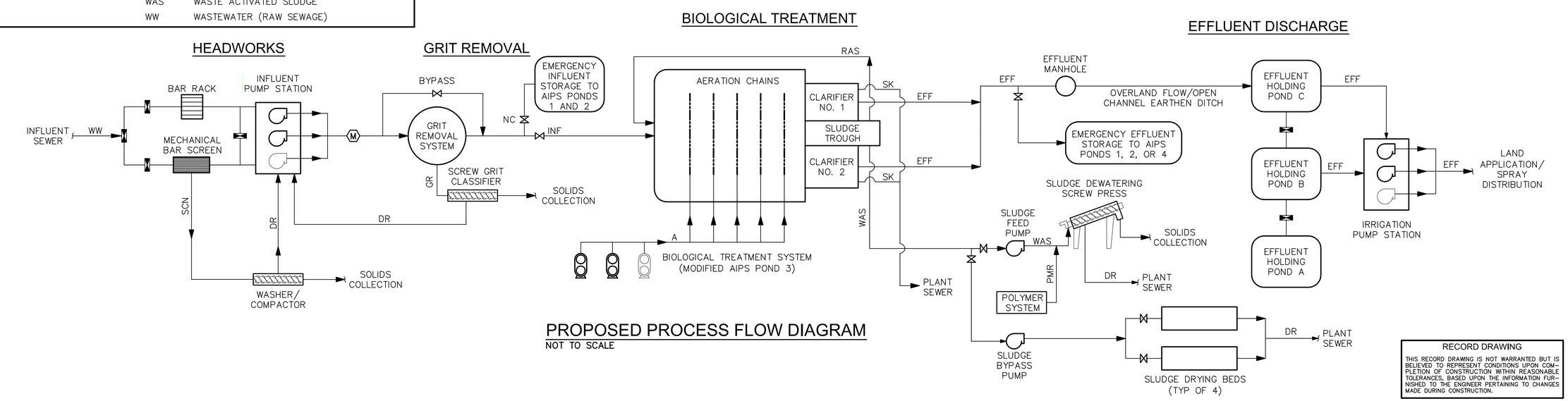

PROPOSED PROCESS FLOW DIAGRAM

NOT TO SCALE

RECORD DRAWING

THIS RECORD DRAWING IS NOT WARRANTED BUT IS BELIEVED TO REPRESENT CONDITIONS UPON COMPLETION OF CONSTRUCTION WITHIN REASONABLE TOLERANCES, BASED UPON THE INFORMATION FURNISHED TO THE ENGINEER PERTAINING TO CHANGES MADE DURING CONSTRUCTION.

REV	DESCRIPTION	ENGR	DATE	APPD	DATE
1	AS-BUILT	TF/MH	11/2012		

PROGRESS: RECORD DRAWINGS
SUBMITTAL DATE: 11/14/2012
PROJECT MANAGER: T. FALK
DESIGNED BY: K.L.B, A.E.G, M.D.H
DRAWN BY: K.K, C.S, N.H
CHECKED BY: S. DEERING

REGISTERED PROFESSIONAL ENGINEER TIM C. FALK Exp. 6/30/12 CIVIL STATE OF CALIFORNIA

PLANS PREPARED BY:
DUDEK
605 Third Street Encinitas, CA 92024
760.942.5147 Fax 760.942.4508

City of Guadalupe
Public Works Dept.
918 Obispo Street, Guadalupe, California 93434
Tel 805-356-3891 Fax 805-343-5512

WASTEWATER TREATMENT PLANT IMPROVEMENT PROJECT

PROCESS FLOW DIAGRAMS

DWG. G-4
PROJECT NO. 6576
SHT. NO. 4 OF 50

P:\101.Engineering\Guadalupe, City of\6576-Wastewater Treatment Plant\6 Design Data\CAD6576\dwg\As-Builts 8-23-12\6576 SH04 G-4 11/14/2012 11:24 AM

GENERAL PLANT DESIGN PARAMETERS

PARAMETER	Unit	CURRENT, Q = 0.6 MGD	WDR LIMIT, Q = 0.96 MGD
INFLUENT FLOW RATES			
AVERAGE DAILY FLOW (ADF) RATE	MGD	0.600	0.960
PEAK HOUR FLOW (PHF) RATE (WET WEATHER)	MGD	1.92	2.88
INFLUENT CHARACTERISTICS			
BIOCHEMICAL OXYGEN DEMAND (BOD-5)	mg/L	300	300
TOTAL SUSPENDED SOLIDS (TSS)	mg/L	300	300
TOTAL KJELDAHL NITROGEN (TKN)	mg/L	50	50
AMMONIA AS NITROGEN (ASSUMED)	mg/L	35	35
ALKALINITY (ASSUMED)	mg/L	100-200	100-200
DESIGN EFFLUENT REQUIREMENTS			
EFFLUENT TSS (MONTHLY AVERAGE)	mg/L	30	30
EFFLUENT BOD-5 (MONTHLY AVERAGE)	mg/L	30	30

INFLUENT PUMP STATION AND INFLUENT COARSE SCREENING

PARAMETER	Unit	CURRENT, Q = 0.6 MGD	WDR LIMIT, Q = 0.96 MGD
MECHANICALLY CLEANED BAR SCREEN			
NUMBER OF SCREENS	No.	1	1
BAR SPACING	mm	9.5	9.5
CHANNEL WIDTH	ft	2.5	2.5
CHANNEL DEPTH	ft	2.8	2.8
INCLINATION	deg	70	70
THRU-SCREEN VELOCITY	fps	1.42	1.91
CLEAN SCREEN DIFFERENTIAL HEADLOSS	ft	0.03	0.06
EXISTING MANUALLY CLEANED BAR SCREEN (FOR BYPASS)			
NUMBER OF MANUALLY CLEANED BAR SCREENS	No.	1	1
MANUALLY CLEANED BAR SCREEN OPENING	in	1	1
MANUALLY CLEANED BAR SCREEN CHANNEL WIDTH	ft	2.75	2.75
CHANNEL DEPTH	ft	2.8	2.8
SCREENINGS WASHER/COMPACTOR			
NUMBER OF WASHER/COMPACTORS	No.	1	1
SCREENINGS CAPACITY (BATCH SERVICE)	cu. ft/hr	16.3	16.3
MINIMUM PERCENT DRY SOLIDS OF COMPACTED SCREENINGS	%	50	50
INFLUENT PUMP STATION			
NUMBER OF SUMBERSIBLE SOLIDS HANDLING PUMPS	No.	3 (2 DUTY, 1 STANDBY)	3 (2 DUTY, 1 STANDBY)
PUMP CAPACITY (1 PUMP)	gpm	1,278	1,278
PUMP TOTAL DYNAMIC HEAD (1 PUMP)	ft	32.7	32.7
NOMINAL MOTOR SPEED	rpm	1,800	1,800

GRIT REMOVAL SYSTEM

PARAMETER	Unit	CURRENT, Q = 0.6 MGD	WDR LIMIT, Q = 0.96 MGD
GRIT CHAMBER			
DESIGN CAPACITY OF GRIT CHAMBER	gpm	2000	2000
NUMBER OF VORTEX GRIT CHAMBER UNITS	No.	1	1
GRIT WELL DIAMETER	ft	3	3
GRIT WELL DEPTH	ft	5.6	5.6
VORTEX CHAMBER DIAMETER	ft	8	8
VORTEX CHAMBER DEPTH	ft	4.4	4.4
PADDLE DRIVE SPEED	rpm	21	21
GRIT PUMP			
NUMBER OF GRIT PUMPS	No.	1	1
DESIGN FLOW RATE OF PUMP	gpm	250	250
DESIGN TOTAL DYNAMIC HEAD OF PUMP	ft	25	25
NOMINAL MOTOR SPEED	rpm	1200	1200
GRIT CLASSIFIER			
NUMBER OF CLASSIFIERS	No.	1	1
GRIT CAPACITY	gal	204	204
SPEED OF SCREW CONVEYOR	rpm	9	9
SLOPE OF SCREW CONVERYOR	deg	22	22

BIOLOGICAL TREATMENT SYSTEM

Parameter	Unit	CURRENT, Q = 0.6 MGD	WDR LIMIT, Q = 0.96 MGD
Aeration Basins			
Number of Basins (Retrofitted AIPS Pond No. 3)	No.	1	1
Width at Grade	ft	185	185
Length at Grade	ft	169	169
Side Water Depth	ft	11	11
Slope Ratio	ft	3:1	3:1
Basin Volume	M gal	1.58	1.58
Hydraulic Retention Time (HRT)	hr	63.2	39.5
Design MLSS	mg/L	2,050	3,189
F/M Ratio	1/d	0.06	0.06
Sludge Retention Time (SRT)	day	25.4	24.6
Integral Clarifiers			
Number of Clarifiers	No.	2	2
Width	ft	55	55
Length at Water Level	ft	24	24
Surface Loading Rate	gpd/ft^2	227	364
Weir Loading Rate	gpd/ft	4,054	6,486
Return Activated Sludge (RAS) System			
Maximum Return Activated Sludge Flow Rate	MGD	0.9	1.44
Aeration Blowers			
Number of Blowers	No.	3 (2 DUTY, 1 STANDBY)	3 (2 DUTY, 1 STANDBY)
Design Capacity of Each Blower	scfm	352	352
Design Total Dynamic Head of Each Blower	psig	5.4	5.4
Blower Speed	rpm	1,800	1,800

SLUDGE HANDLING FACILITIES

PARAMETER	Unit	CURRENT, Q = 0.6 MGD	WDR LIMIT, Q = 0.96 MGD
WASTE ACTIVATED SLUDGE (WAS)			
SLUDGE WASTING RATE	lb/d	1,009	1,615
SLUDGE CONCENTRATION	mg/L	6,400	6,400
PROGRESSIVE CAVITY SLUDGE FEED PUMPS			
NUMBER OF PUMPS	No.	1	1
DESIGN FLOW RATE OF EACH PUMP	gpm	28	44
DEWATERING SCREW PRESS			
NUMBER OF SCREW PRESSES	No.	1	1
DESIGN DRY SOLIDS LOADING RATE	lb/hr	88	141
DUTY CYCLE	hrs/wk	80	80
DEWATERED SLUDGE CHARACTERISTICS			
PERCENT DRY SOLIDS, MINIMUM	%	15	15
SOLIDS CAPTURE RATE	%	95	95
SLUDGE CAKE PRODUCTION RATE - VOLUME	CY/wk	26	41
SLUDGE CAKE PRODUCTION RATE - WEIGHT	ton/wk	22.4	35.8

INFLUENT PUMP STATION PUMP AND SYSTEM CURVES

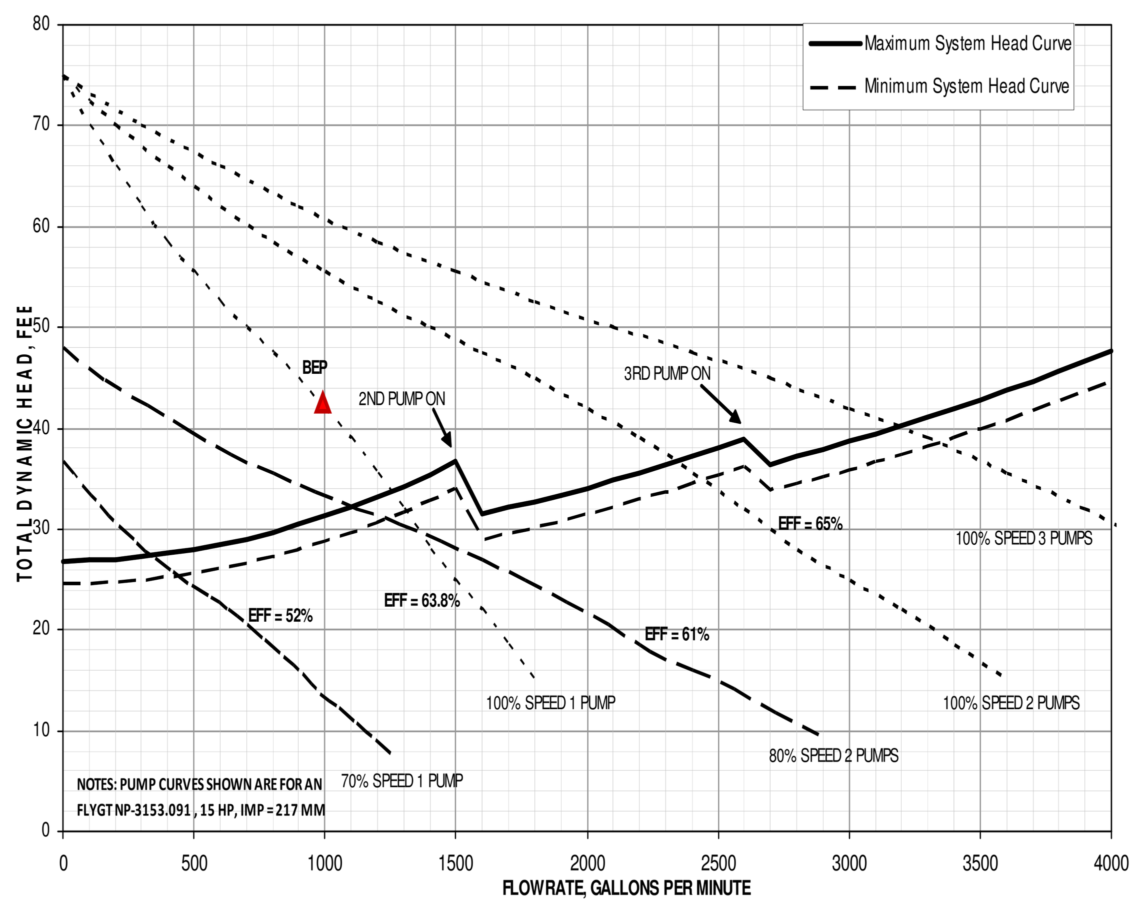

EQUIPMENT LIST

EQUIP NO.			EQUIPMENT DESCRIPTION
SL	-	101	EXISTING SLIDE GATE
STP	-	101	EXISTING STOP PLATE
STP	-	102	EXISTING STOP PLATE
STP	-	103	EXISTING STOP PLATE
STP	-	104	EXISTING STOP PLATE
STP	-	105	EXISTING STOP PLATE
STP	-	106	EXISTING STOP PLATE
SCN	-	101	MECHANICAL BAR SCREEN
SCN	-	102	WASHER/COMPACTOR
SCN	-	103	EXISTING MANUAL BAR RACK
W	-	101	WEIR PLATE
P	-	101	SUBMERSIBLE PUMP
P	-	102	SUBMERSIBLE PUMP
P	-	103	SUBMERSIBLE PUMP
P	-	104	FUTURE SUBMERSIBLE PUMP
SL	-	102	EXISTING SLIDE GATE
FE/FIT	-	101	EXISTING MAGNETIC FLOW METER
CR	-	101	EXISTING CRANE
P	-	201	GRIT PUMP
GR	-	201	PROPELLER PADDLE SYSTEM
GR	-	202	CONCENTRATOR
GR	-	203	CLASSIFIER
GR	-	204	PRIMING SYSTEM
SL	-	201	EXISTING SLIDE GATE
SL	-	202	EXISTING SLIDE GATE
SL	-	203	EXISTING SLIDE GATE
STP	-	201	EXISTING STOP PLATE
STP	-	202	EXISTING STOP PLATE
BIO	-	301	DIFFUSERS (ALL)
BIO	-	302	FLOCCULATING RAKE MECHANISM
BIO	-	303	FLOCCULATING RAKE MECHANISM
BIO	-	304	ROTARY SKIMMERY ASSEMBLY
BIO	-	305	ROTARY SKIMMERY ASSEMBLY
BIO	-	306	ROTARY SKIMMERY ASSEMBLY
BIO	-	307	ROTARY SKIMMERY ASSEMBLY
B	-	301	BLOWER
B	-	302	BLOWER
B	-	303	BLOWER
SDG	-	401	SCREW PRESS
P	-	401	PROGRESSIVE CAVITY PUMP
P	-	402	PROGRESSIVE CAVITY PUMP
SDG	-	402	SCREW CONVEYOR
TK	-	401	FLOCCULATION TANK
MME	-	401	POLYMER INJECTION SYSTEM
FE/FIT	-	401	MAGNETIC FLOW METER
SAM	-	501	EFFLUENT SAMPLER
FE/FIT	-	501	MAGNETIC FLOW METER

PIPING SCHEDULE

PIPE ID	SERVICES	PIPE SPEC	TYPE/ CLASS	FITTINGS	EXTERIOR COATING	INTERIOR LINING
1	EFF	DUCTILE IRON, ANSI A21.51 (AWWA C151) FLG, MJ/RMJ, PO, GRV JOINTS PER PLANS SEE SPEC SECTION 15061	CL350: 3" - 12" CL250: > 12"	DUCTILE IRON (AWWA C110) DUCTILE IRON (AWWA C153) FOR MJ FITTINGS FLG, MJ/RMJ, PO, GRV JOINTS PER PLANS SEE SPEC SECTION 15061	BURIED: PE & WT FOR FTGS EXPOSED: EP	CML
2	INF, WW, WAS, V, GR, DR	DUCTILE IRON, ANSI A21.51 (AWWA C151) FLG, MJ/RMJ, PO, GRV JOINTS PER PLANS SEE SPEC SECTION 15061	CL350: 3" - 12" CL250: > 12"	DUCTILE IRON (AWWA C110) DUCTILE IRON (AWWA C153) FOR MJ FITTINGS FLG, MJ/RMJ, PO, GRV JOINTS PER PLANS SEE SPEC SECTION 15061	BURIED: PE & WT FOR FTGS EXPOSED: EP	CE
2 1 3	RAS, WAS,EFF,INF, PW	POLYVINYL CHLORIDE (PVC) PRESSURE PIPE (AWWA C900 AND C905) PO AND RMJ PER PLANS SEE SPEC SECTION 15065	PR150 OR PR 165	SIMILAR TO PIPE ID 1 AND 2	PIPE: NONE FITTINGS: SIMILAR TO PIPE ID 1 AND 2	PIPE: NONE FITTINGS: SIMILAR TO PIPE ID 1 AND 2
4	POT, PW	STEEL, ASTM A53, BLACK WELDED, GALVANIZED	SCH. 40	2.5" AND SMALLER: MALLEABLE IRON (ASME B16.3), THREADED, BANDED, GALVANIZED 150PSI 3" AND LARGER: CAST IRON (ASME B16.1), 125 PSI FLG OR MJ	EXPOSED: GALV BURIED: PE	N/A
5	NOT USED	WELDED STEEL (AWWA C200) SEE SPEC SECTION 15063		WELDED STEEL (AWWA C200) SEE SPEC SECTION 15063	BURIED: CML EXPOSED: EP	CML
6	A	STAINLESS STEEL, TYPE 316, ASTM A312 USE TYPE 316L FOR WELDED PIPE SEE SECTION 15062	SCH. 10S	STAINLESS STEEL, TYPE 316L, WELDED SLIP-ON FLG (ASME B16.3) OR SOCKET WELDED FITTINGS SCHEDULE 40S; GROOVED FITTINGS (ASTM-A-403)	NONE	NONE
7	NOT USED	STAINLESS STEEL, TYPE 316, ASTM A312 USE TYPE 316L FOR WELDED PIPE SEE SECTION 15062	SCH. 40S	STAINLESS STEEL, TYPE 316, SCREWED, TYPE 316L WELDED SLIP-ON FLG (ASME B16.3) OR SOCKET WELDED FITTINGS SCHEDULE 40S OR GROOVED FITTINGS (ASTM-A-403)	NONE	NONE
2 8	PMR,PW	POLYVINYL CHLORIDE (PVC) (ASTM D1785), NORMAL IMPACT SOLVENT WELDED JOINTS SEE SPEC SECTION 15065	SCH. 80	POLYVINYL CHLORIDE (PVC), SCH. 80, NORMAL IMPACT, SOCKET SOLVENT WELD JOINTS (ASTM D2855). SEE SPEC SECTION 15065	NONE	NONE
9	NOT USED	CHLORINATED POLYVINYL CHLORIDE (CPVC) (ASTM F441)	SCH. 80	CPVC, SCHEDULE 80, SOCKET WELD JOINTS. SEE SPEC SECTION 15065	NONE	NONE
10	DR, SK, S	POLYVINYL CHLORIDE (PVC) GRAVITY SEWER PIPE (ASTM D3034) PO JOINT	SDR35	N/A	NONE	NONE
11	NOT USED	POLYVINYL CHLORIDE (PVC) PIPE, PERFORATED (ASTM D2729) WITH PUSH-ON JOINTS		SAME AS PIPE ID 10. SEE SPEC SECTION 15065	NONE	NONE

PIPE MATERIAL/TYPE/CLASS CODES:

DI	DUCTILE IRON
CS	CARBON STEEL
PVC	POLYVINYL CHLORIDE
SS	STAINLESS STEEL
CPVC	CHLORINATED POLYVINYL CHLORIDE
CU	COPPER
304SS	TYPE 304/304L STAINLESS STEEL
316SS	TYPE 316/316L STAINLESS STEEL
EPDM	EPDM TUBING
FRP	FIBERGLASS REINFORCED PLASTIC
HDPE	HIGH DENSITY POLYETHYLENE
STL	(FABRICATED) STEEL
GALV	GALVANIZED

LINING/COATING CODES:

ACV	ACRYLIC OR EMULSION TYPE VINYL (SEE NOTE 2)
CE	CERAMIC EPOXY (SEE SPEC SECTION 15061)
CTE	COAL TAR EPOXY
CML	CEMENT MORTAR LINING (OR COATING)
FBE	FUSION BONDED EPOXY
EP	EPOXY (SEE NOTE 3)
GALV	(HOT-DIPPED) GALVANIZED
PE	POLYETHYLENE WRAP
PU	POLYURETHANE (SEE NOTE 7)
UL	UNLINED
WT	WAX TAPE (SEE SPEC SECTION 09902)

JOINING METHOD MATERIAL CODES:

FLG	FLG: FLANGED
SW	SOLVENT WELD
MJ	MECHANICAL JOINT
RMJ	RESTRAINED MECHANICAL JOINT
PO	GASKETED PUSH-ON
RPO	RESTRAINED (GASKETED) PUSH-ON
SCW	SOCKET WELD
BW	BUTT WELD
GRV	GROOVED
GRV-QD	GROOVED W/ QUICK DISCONNECT CPLG
THRD	THREADED

GENERAL ABBREVIATIONS:

VRD	VARIES, REFER TO DRAWINGS
IPS	IRON PIPE SIZE
SBR	STYRENE BUTADIENE RUBBER
NBR	NITRILE
EPDM	ETHLYLENE PROPYLENE DIENE MONOMOER
N/A	NOT APPLICABLE

NOTES:

(1) FOR PIPE DESIGNATION, REFER TO "PIPING SERVICE ABBREVIATIONS" ON DRAWING G-4.
(2) FOR PVC COATING SPECIFICATIONS, REFER TO SECTION 15065.
(3) FOR ALL PAINTING SPECIFICATIONS OF PIPING AND FITTINGS, REFER TO SECTION 09900 AND SECTION 15051.
(4) NOT USED
(5) WHERE PIPING IS ENCASED IN CONCRETE, MEET COATING REQUIREMENTS OF SECTION 09900.
(6) WHERE RMJ FITTINGS ARE SHOWN, CONTRACTOR MAY PROVIDE UNRESTRAINED JOINTS ONLY WHEN CONTRACTOR SUBMITS AND OBTAINS APPROVAL FOR CALCULATIONS THAT SHOW REQUIRED RESTRAINED LENGTH OF PIPE ADJACENT TO BENDS. CALCULATIONS SHALL USE HYDROSTATIC TEST PRESSURE.
(7) FOR COATING OF BURIED DUCTILE IRON PIPE, REFER TO SECTION 15061

* INDICATES DIMENSION TO BE FIELD VERIFIED BY CONTRACTOR

NOTE:

1. THRUST BLOCK SIZE FOR 14" EFF-3, 14" RAS-3, AND 16" INF-3 SHALL BE 10-SQFT (MIN). 3 RFI #29
2. THRUST BLOCK SIZE FOR 4" WAS-3 SHALL BE 5-SQFT (MIN). 3 RFI #45

REFERENCE DOCUMENTS:

1. GEOTECHNICAL INVESTIGATION REPORT PERFORMED BY GSI SOILS, INC. 03/08/2011
2. CIVIL SURVEY PERFORMED BY GARING TAYLOR AND ASSOCIATES. 07/01/2010
3. WASTEWATER RECLAMATION FACILITIES, OCTOBER 1979, CITY OF GUADALUPE, CA. BY SOBHANI ENGINEERING.
4. CONSTRUCTION DRAWINGS FOR WASTEWATER TREATMENT PLANT EXPANSION AND APPURTENANT WORK, JULY 1992. BY METCALF & EDDY.
5. CITY OF GUADALUPE WASTEWATER TREATMENT PLAN, MAY 2002. CITY OF GUADALUPE, CA. BY SWANSON INTERNATIONAL.

RECORD DRAWING

THIS RECORD DRAWING IS NOT WARRANTED BUT IS BELIEVED TO REPRESENT CONDITIONS UPON COMPLETION OF CONSTRUCTION WITHIN REASONABLE TOLERANCES, BASED UPON THE INFORMATION FURNISHED TO THE ENGINEER PERTAINING TO CHANGES MADE DURING CONSTRUCTION.

REV	DESCRIPTION	ENGR	DATE	APPD	DATE
3	AS-BUILT	TF/MH	11/2012		
2	ADDENDUM No. 2		8/8/11		
1	ADDENDUM No. 1		8/1/11		

PROGRESS: RECORD DRAWINGS
SUBMITTAL DATE: 11/14/2012
PROJECT MANAGER: T. FALK
DESIGNED BY: K.L.B, A.E.G, M.D.H
DRAWN BY: K.K, C.S, N.H
CHECKED BY: S. DEERING

REGISTERED PROFESSIONAL ENGINEER TOM C. FALK No. 069780 Exp. 6/30/12 CIVIL STATE OF CALIFORNIA

PLANS PREPARED BY:

DUDEK
605 Third Street Encinitas, CA 92024
760.942.5147 Fax 760.942.4508

City of Guadalupe
Public Works Dept.
918 Obispo Street, Guadalupe, California 93434
Tel 805-356-3891 Fax 805-343-5512

WASTEWATER TREATMENT PLANT IMPROVEMENT PROJECT

DESIGN CRITERIA AND EQUIPMENT LIST

DWG. G-5
PROJECT NO. 6576

P:\101.Engineering\Guadalupe, City of\6576-Wastewater Treatment Plant\6 Design Data\CAD6576\dwg\As-Builts 8-23-12\6576 SH05 G-5 11/14/2012 11:24 AM

INSTRUMENT TAG IDENTIFICATION

	PRIMARY LOCATION (b)NORMALLY ACCESSIBLE TO OPERATOR	FIELD MOUNT	AUXILIARY LOCATION (b)NORMALLY ACCESSIBLE TO OPERATOR
DISCRETE INSTRUMENTS	LCP		LCP
SHARED DISPLAY, SHARED CONTROL	LCP		LCP
COMPUTER FUNCTION	LCP		LCP
PROGRAMMABLE LOGIC CONTROL	LCP		LCP

(a) DESIGNATIONS SUCH AS 100 (LOCAL CONTROL BOARD NO. 100), 200 (LOCAL CONTROL BOARD NO.200), ETC., ARE USED WHEN NECESSARY TO SPECIFY INSTRUMENT OR FUNCTION LOCATION.

(b) NORMALLY INACCESSIBLE OR BEHIND–THE–PANEL DEVICES OR FUNCTIONS ARE DEPICTED BY USING THE SAME SYMBOLS BUT WITH DASHED HORIZONTAL BARS, I.E.

SINGLE INSTRUMENT OR OTHER COMPONENT HAVING MULTIPLE FUNCTIONS

(XXX) SOFTWARE OR LOGIC RESIDENT IN DISTRIBUTED CONTROL SYSTEM (DCS) AT PROGRAMMABLE LOGIC CONTROLLER (PLC) XXX. SEE ASSOCIATED LOGIC DIAGRAMS.

(XXX) PANEL MOUNTED PILOT LIGHT WITH PANEL NUMBER DESIGNATION(i.e. XXX = 100, 200, ETC.).

FY * INSTRUMENT PANEL MOUNTED WITH COMPUTING OR CONVERTING FUNCTION

CONVERT

E – VOLTAGE
I – CURRENT
P – PNEUMATIC
A – ANALOG
B – BINARY
H – HYDRAULIC
O – ELECTROMAGNETIC, SONIC
R – RESISTANCE (ELECT.)
D – DIGITAL
PF – PULSE FREQUENCY

COMPUTE

SUMMING
SUBTRACTOR
MUTIPLYING
DIVIDING
ROOT EXTRACTION
PROPORTIONAL
DERIVITIVE
AVERAGING
RATIO
DIFFERENCE
HIGH SELECTING
LOW SELECTING
INTEGRAL

(XXX) DESIGNATIONS OF CONTROL FUNCTIONS ASSOCIATED INSTRUMENT OR OTHER COMPONENTS.

AC – AUTO/CLOSE
AHC – AUTO/HOLD/CLOSE
AM – AUTO/MANUAL
DEV – DEVIATION
HOA – HAND/OFF/AUTO
HOR – HAND/OFF/REMOTE
LOS – LOCKOUT STOP
LR – LOCAL/REMOTE
MOA – MANUAL/OFF/AUTO
OO – ON/OFF
OCA OPEN/CLOSE/AUTO
OSC – OPEN/STOP/CLOSED
POT – POTENTIOMETER
RST – RESET
RL – RAISE/LOWER
RSL – RAISE/STOP/LOWER
SD – SHUTDOWN
SEL – SELECT
SP – SET POINT
SR – START/RESET
SS – STOP/START
WA WARNING ALARM

ISA FUNCTION IDENTIFICATION TABLE

	FIRST–LETTER		SUCCEEDING–LETTERS		
	MEASURED OR INITIATING VARIABLE	MODIFIER	READOUT OR PASSIVE FUNCTION	OUTPUT FUNCTION	MODIFIER
A	ANALYSIS		ALARM		
B	BURNER, COMBUSTION				
C	CONDUCTIVITY			CONTROL	CLOSED
D	DENSITY	DIFFERENTIAL			
E	VOLTAGE		SENSOR (PRIMARY ELEMENT)		
F	FLOW RATE	RATIO (FRACTION)			
G	GAGE		GLASS, VIEWING DEVICE		
H	HAND				HIGH
I	CURRENT (ELECTRICAL)		INDICATE		
J	POWER	SCAN			
K	TIME, TIME SCHEDULE	TIME RATE OF CHANGE		CONTROL STATION	
L	LEVEL		LIGHT		LOW
M	MOTOR, MOISTURE	MOMENTARY			MIDDLE, INTERMEDIATE
N	TORQUE		ISOLATE	ISOLATOR	
O			ORIFICE, RESTRICTION		OPEN
P	PRESSURE, VACUUM		POINT (TEST) CONNECTION		
Q	QUANTITY	INTEGRATE, TOTALIZE			
R	RADIATION		RECORD		
S	SPEED, FREQUENCY	SAFETY		SWITCH	
T	TEMPERATURE			TRANSMIT	
U	MULTIVARIABLE		MULTIFUNCTION	MULTIFUNCTION	MULTIFUNCTION
V	VIBRATION, MECHANICAL ANALYSIS			VALVE, DAMPER, LOUVER	
W	WEIGHT, FORCE		WELL		
X	RUN	X AXIS		COMPUTE, CONVERT	
Y	EVENT, STATE OR PRESENCE	Y AXIS		DRIVER, ACTUATOR, FINAL	
Z	POSITION, DIMENSION	Z AXIS		CONTROL ELEMENT	

TYPICAL:
FORMAT

TIC–1	–	INSTRUMENT IDENTIFICATION OR TAG NUMBER
TIC	–	FUNCTIONAL IDENTIFICATION
T	–	FIRST–LETTER
IC	–	SUCCEEDING–LETTER(S)
1	–	LOOP NUMBER

EXPANDED:
FORMAT

10–PAH–1A	— TAG NUMBER
10	— OPTIONAL PREFIX
A	— OPTIONAL SUFFIX

UNDEFINED INTERLOCK DEVICE

FIRST LETTER — SUCCEEDING LETTER — SUCCEEDING LETTER — INSTRUMENT LOOP NUMBER — (INSTRUMENT SYMBOLS)

INPUT/OUTPUT INTERFACE SYMBOLS

= DIGITAL OUTPUT
= ANALOG OUTPUT
= DIGITAL INPUT
= ANALOG INPUT

MECHANICAL EQUIPMENT SYMBOLS

SUMP PUMP
MOTOR
CENTRIFUGAL PUMP
PROGRESSIVE CAVITY PUMP
TANK
BLOWER
VFD VARIABLE FREQUENCY DRIVE CABINET
MIXER OR FLOCCULATOR
COMPRESSOR

PROCESS AND SIGNAL LINE SYMBOLS

PRIMARY PROCESS LINE
SECONDARY PROCESS LINE
INSTRUMENT OR CONNECTION TO PROCESS (1)
ELECTRIC SIGNAL
PF ELECTRIC PULSE FREQUENCY SIGNAL (0–100 CYCLE/SEC., 0–150 PULSE/MIN., etc.)
PD ELECTRIC PULSE DURATION SIGNAL (15 SEC., 3/12 SEC = 0 %, etc.)
PNEUMATIC SYMBOL (2)
HYDRAULIC SYMBOL
CAPILLARY TUBE
ELECTROMAGNETIC OR SONIC SIGNAL (3)
INTERNAL SYSTEM LINK (SOFTWARE OR DATA LINK)
MECHANICAL LINK
CONNECTING LINES
FIELD INSTRUMENT/ DEVICE

(1) REFER TO DWG G–4 FOR PIPING ABBREVIATION

(2) THE PNEUMATIC SIGNAL SYMBOLS APPLIES TO A SIGNAL, NOT A SUPPLY SOURCE, USING ANY GAS AS A MEDIUM. IF A GAS OTHER THAN AIR IS USED, THE GAS IS IDENTIFIED BY A NOTE ON THE SIGNAL.

(3) ELECTROMAGNETIC PHENOMENA INCLUDE HEAT, RADIO WAVES, NUCLEAR RADIATION, AND LIGHT.

GENERAL NOTES

1. ADDITIONAL INSTRUMENTATION AND CONTROL SYMBOLS MAY BE USED AS REQUIRED. SYMBOLS AND NOMENCLATURE ARE BASED ON ISA STANDARDS S5.1, S5.2, S5.4.
2. SEE ASSOCIATED ELECTRICAL AND MECHANICAL SYMBOL SHEETS FOR ADDITIONAL SYMBOLS AND ABBREVIATIONS.
3. FOR PIPE SIZES, MATERIAL, AS WELL AS DETAILS OF METER COUPLING AND OTHER MECHANICAL EQUIPMENT (E.G. VALVE, PUMP ETC.) SEE PROCESS AND INSTRUMENTATION DIAGRAMS, MECHANICAL DRAWINGS AND SPECIFICATIONS.
4. POWER SUPPLIES FOR LOOPS OR SYSTEMS SHALL BE FURNISHED BY THE INSTRUMENTATION MANUFACTURER TO MEET THE PARTICULAR CHARACTERISTICS (E.G. VOLTAGE AND CURRENT REQUIREMENTS) OF COMPONENTS IN EACH LOOP OR SYSTEM.
5. THOSE ITEMS IDENTIFIED BY AN ASTERISK SHALL BE PROVIDED BY THE SYSTEM PROCESS EQUIPMENT SUPPLIER.

VALVE AND ACTUATOR SYMBOLS

NC
GATE VALVE
THREE WAY VALVE
PLUG VALVE
BALL VALVE
BUTTERFLY VALVE
CHECK VALVE
DOUBLE FLAP CHECK VALVE
NEEDLE VALVE
BALANCING VALVE
GLOBE VALVE
AIR RELEASE VALVE
PRESSURE RELEASE VALVE
VACUUM RELIEF VALVE
PRESSURE REDUCING VALVE
BACK PRESSURE REGULATING VALVE
VALVE WITH DIAPHRAGM OPERATOR
SV SOLENOID VALVE
M VALVE WITH MOTOR OPERATOR
VALVE WITH PISTON OPERATOR
VALVE WITH PRESSURE BALANCED OPERATOR
QUICK COUPLER
PINCH VALVE

DEVICE SYMBOLS

ROTOMETER
THERMOMETER
MANUAL SAMPLER
INJECTOR
FILTER
D DRAIN
MANUAL AIR VENT
BLIND FLANGE CAP OR PLUG
STRAINER
WATER SURFACE ELEVATION
LE/LT XXXX ULTRA SONIC LEVEL SENSOR
LE/LT XXXX CAPACITANCE LEVEL PROBE
PROPELLER FLOW METER
REDUCER OR INCREASER
SLUICE GATE
SLIDE GATE (NORMALLY OPEN)
SLIDE GATE (NORMALLY CLOSED)
FLAP GATE
STOP GATE
CHEMICAL DIFFUSER
PULSATION DAMPER
STATIC MIXER
CALIBRATION CHAMBER

RECORD DRAWING

THIS RECORD DRAWING IS NOT WARRANTED BUT IS BELIEVED TO REPRESENT CONDITIONS UPON COMPLETION OF CONSTRUCTION WITHIN REASONABLE TOLERANCES, BASED UPON THE INFORMATION FURNISHED TO THE ENGINEER PERTAINING TO CHANGES MADE DURING CONSTRUCTION.

REV	DESCRIPTION	ENGR	DATE	APPD	DATE
1	AS–BUILT	TF/MH	11/2012		

PROGRESS: RECORD DRAWINGS
SUBMITTAL DATE: 11/14/2012
PROJECT MANAGER: T. FALK
DESIGNED BY: K.L.B, A.E.G, M.D.H
DRAWN BY: K.K, C.S, N.H
CHECKED BY: S. DEERING

REGISTERED PROFESSIONAL ENGINEER TIM C. FALK Exp. 6/30/12 CIVIL STATE OF CALIFORNIA

PLANS PREPARED BY:
DUDEK
605 Third Street Encinitas, CA 92024
760.942.5147 Fax 760.942.4508

City of Guadalupe
Public Works Dept.
918 Obispo Street, Guadalupe, California 93434
Tel 805-356-3891 Fax 805-343-5512

WASTEWATER TREATMENT PLANT IMPROVEMENT PROJECT

P&ID LEGEND, ABBREVIATIONS AND GENERAL NOTES

DWG. N-1
PROJECT NO. 6576
SHT. NO. 6 OF 50

P:\101.Engineering\Guadalupe, City of\6576–Wastewater Treatment Plant\6 Design Data\CAD6576\dwg\As–Builts 8–23–12\6576 SH06 N–1 11/14/2012 11:24 AM

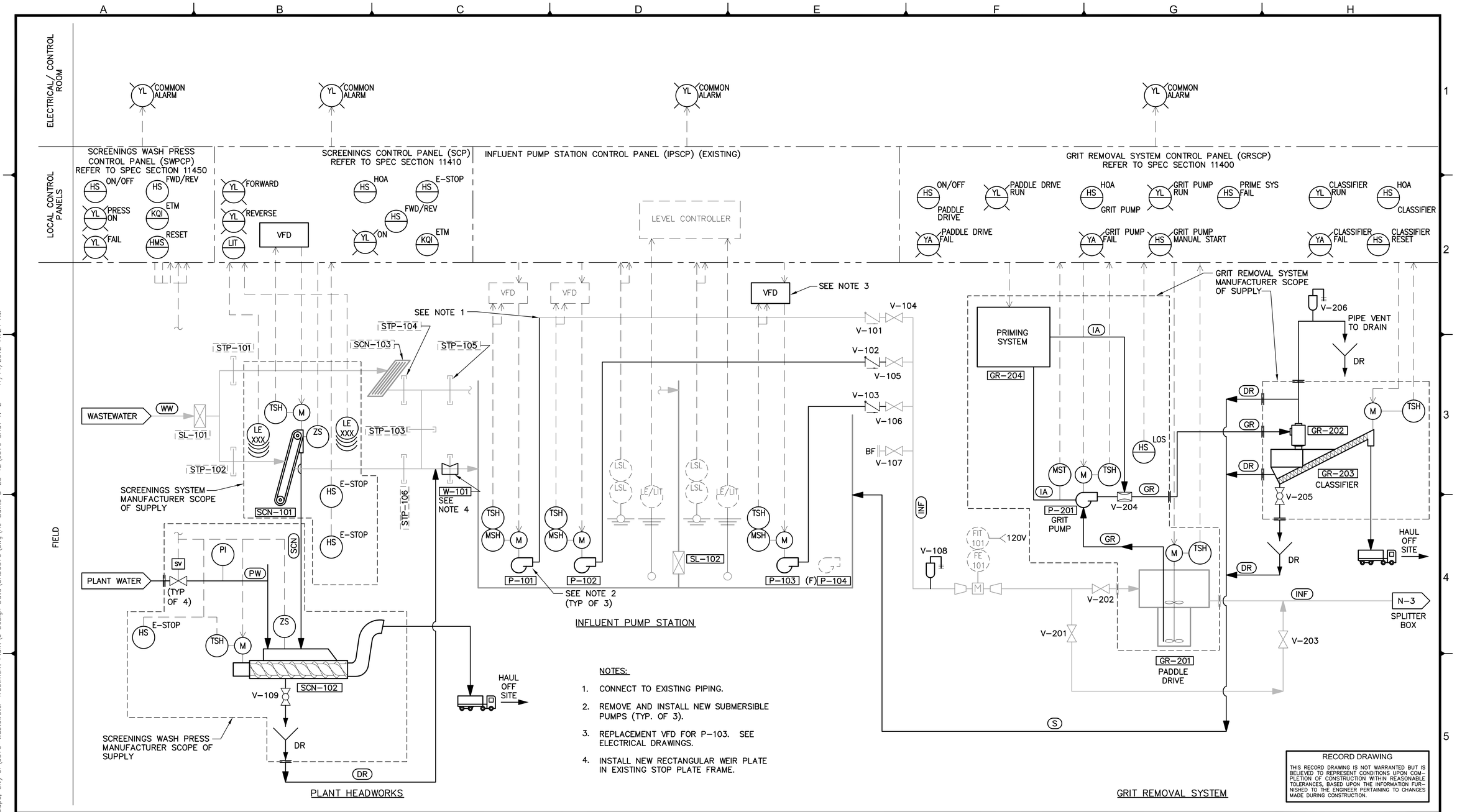

NOTES:

1. CONNECT TO EXISTING PIPING.
2. REMOVE AND INSTALL NEW SUBMERSIBLE PUMPS (TYP. OF 3).
3. REPLACEMENT VFD FOR P-103. SEE ELECTRICAL DRAWINGS.
4. INSTALL NEW RECTANGULAR WEIR PLATE IN EXISTING STOP PLATE FRAME.

RECORD DRAWING

THIS RECORD DRAWING IS NOT WARRANTED BUT IS BELIEVED TO REPRESENT CONDITIONS UPON COMPLETION OF CONSTRUCTION WITHIN REASONABLE TOLERANCES, BASED UPON THE INFORMATION FURNISHED TO THE ENGINEER PERTAINING TO CHANGES MADE DURING CONSTRUCTION.

REV	DESCRIPTION	ENGR	DATE	APPD	DATE
1	AS-BUILT	TF/MH	11/2012		

PROGRESS: RECORD DRAWINGS
SUBMITTAL DATE: 11/14/2012
PROJECT MANAGER: T. FALK
DESIGNED BY: K.L.B, A.E.G, M.D.H
DRAWN BY: K.K, C.S, N.H
CHECKED BY: S. DEERING

REGISTERED PROFESSIONAL ENGINEER — TIM C. FALK — Exp. 6/30/12 — CIVIL — STATE OF CALIFORNIA

PLANS PREPARED BY:
DUDEK
605 Third Street Encinitas, CA 92024
760.942.5147 Fax 760.942.4508

City of Guadalupe
Public Works Dept.
918 Obispo Street, Guadalupe, California 93434
Tel 805-356-3891 Fax 805-343-5512

WASTEWATER TREATMENT PLANT IMPROVEMENT PROJECT

HEADWORKS, INFLUENT PUMP STATION AND GRIT REMOVAL

DWG. N-2
PROJECT NO. 6576
SHT. NO. 7 OF 50

P:\101.Engineering\Guadalupe, City of\6576-Wastewater Treatment Plant\6 Design Data\CAD6576\dwg\As-Builts 8-23-12\6576 SH07 N-2 11/14/2012 11:24 AM

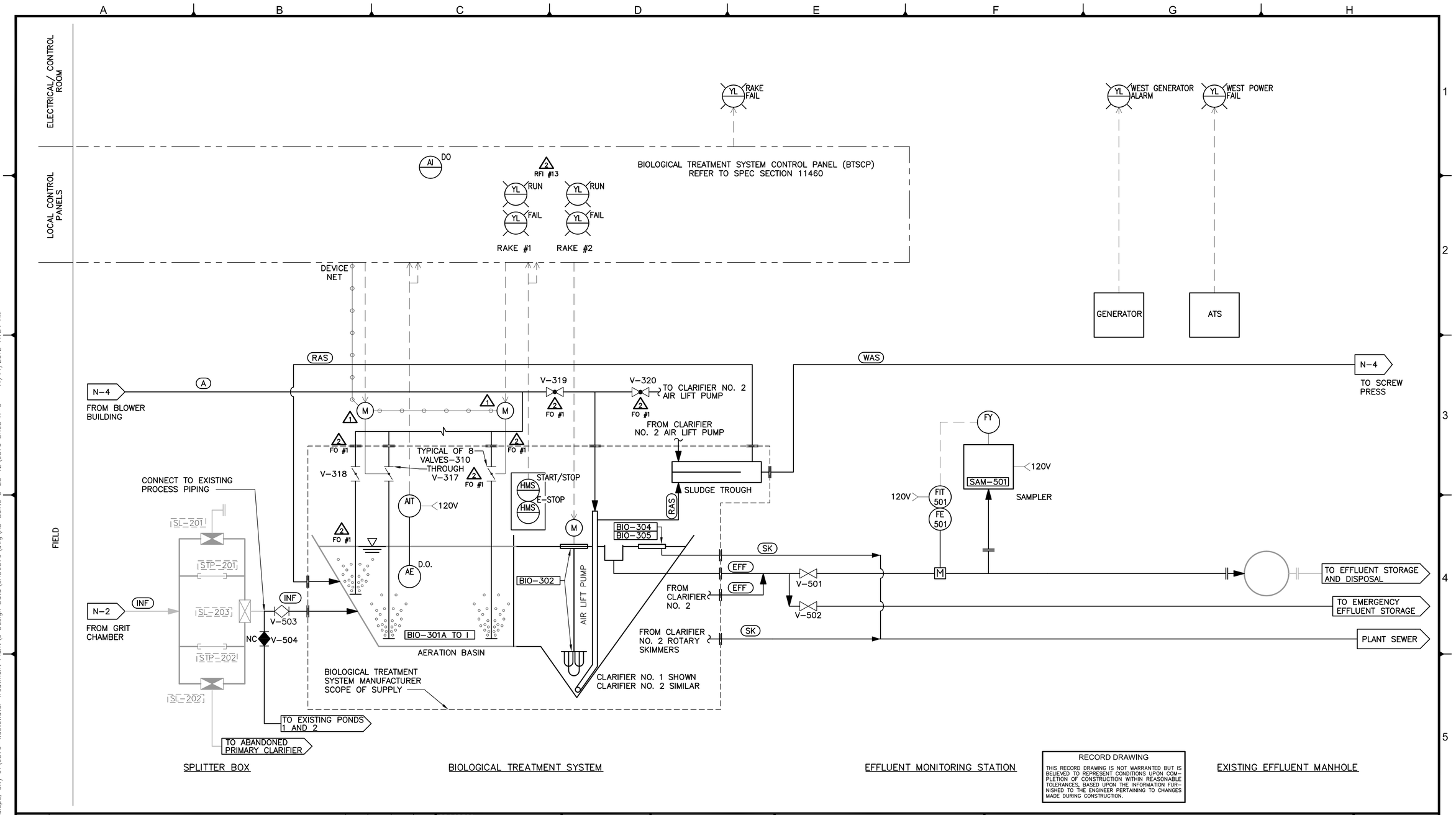

RECORD DRAWING

THIS RECORD DRAWING IS NOT WARRANTED BUT IS BELIEVED TO REPRESENT CONDITIONS UPON COMPLETION OF CONSTRUCTION WITHIN REASONABLE TOLERANCES, BASED UPON THE INFORMATION FURNISHED TO THE ENGINEER PERTAINING TO CHANGES MADE DURING CONSTRUCTION.

REV	DESCRIPTION	ENGR	DATE	APPD	DATE
2	AS-BUILT	TF/MH	11/2012		
1	ADDENDUM No. 2		8/8/11		

PROGRESS: RECORD DRAWINGS
SUBMITTAL DATE: 11/14/2012
PROJECT MANAGER: T. FALK
DESIGNED BY: K.L.B, A.E.G, M.D.H
DRAWN BY: K.K, C.S, N.H
CHECKED BY: S. DEERING

REGISTERED PROFESSIONAL ENGINEER TOM C. FALK No. 63780 Exp. 6/30/12 CIVIL STATE OF CALIFORNIA

PLANS PREPARED BY:
DUDEK
605 Third Street Encinitas, CA 92024
760.942.5147 Fax 760.942.4508

City of Guadalupe
Public Works Dept.
918 Obispo Street, Guadalupe, California 93434
Tel 805-356-3891 Fax 805-343-5512

WASTEWATER TREATMENT PLANT IMPROVEMENT PROJECT

BIOLOGICAL TREATMENT SYSTEM AND EFFLUENT MONITORING

DWG. N-3
PROJECT NO. 6576
SHT. NO. 8 OF 50

P:\101.Engineering\Guadalupe, City of\6576-Wastewater Treatment Plant\6 Design Data\CAD6576\dwg\As-Builts 8-23-12\6576 SH08 N-3 11/14/2012 11:24 AM

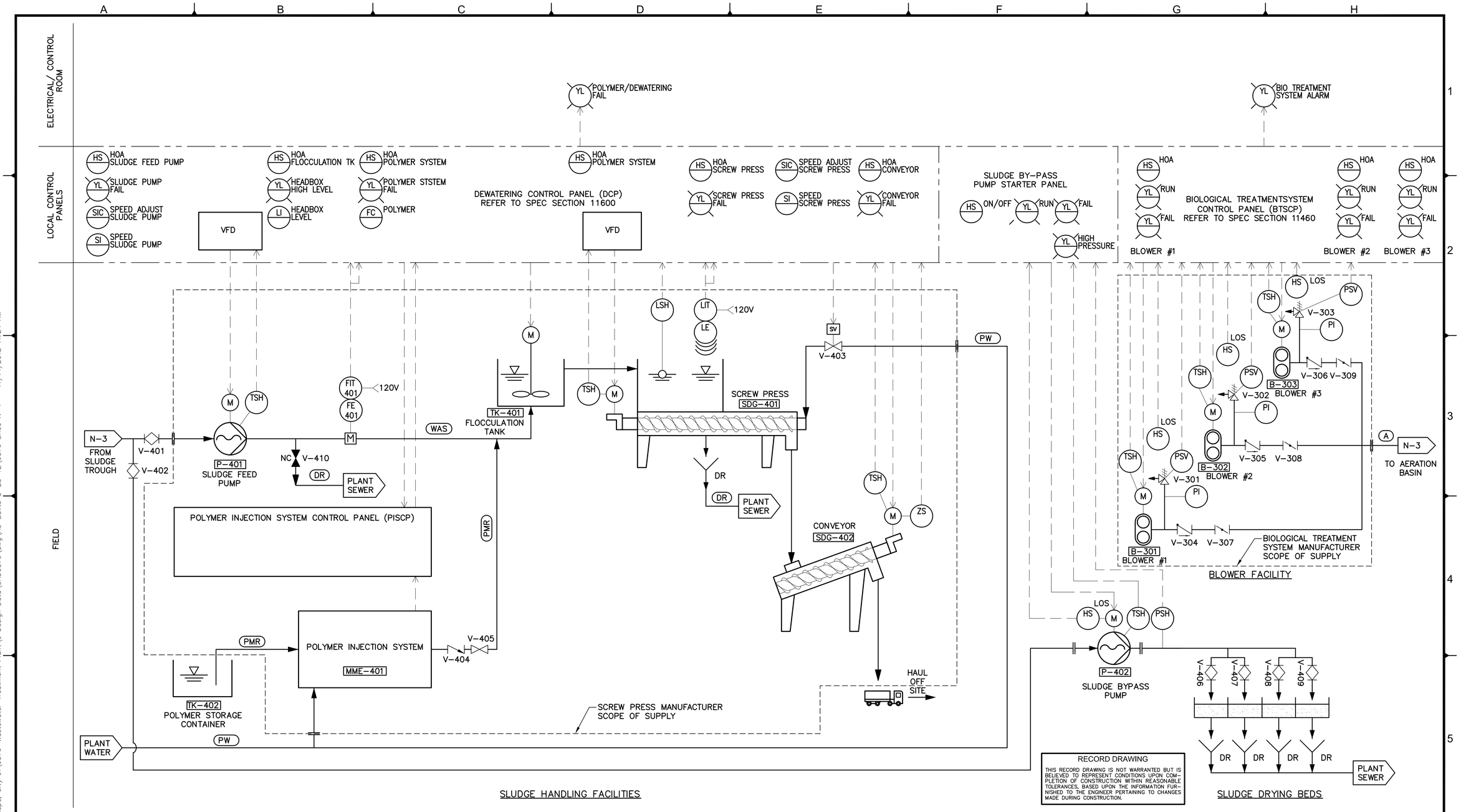

RECORD DRAWING

THIS RECORD DRAWING IS NOT WARRANTED BUT IS BELIEVED TO REPRESENT CONDITIONS UPON COMPLETION OF CONSTRUCTION WITHIN REASONABLE TOLERANCES, BASED UPON THE INFORMATION FURNISHED TO THE ENGINEER PERTAINING TO CHANGES MADE DURING CONSTRUCTION.

REV	DESCRIPTION	ENGR	DATE	APPD	DATE
1	AS-BUILT	TF/MH	11/2012		

PROGRESS: RECORD DRAWINGS
SUBMITTAL DATE: 11/14/2012
PROJECT MANAGER: T. FALK
DESIGNED BY: K.L.B, A.E.G, M.D.H
DRAWN BY: K.K, C.S, N.H
CHECKED BY: S. DEERING

REGISTERED PROFESSIONAL ENGINEER JIM C. FALK CIVIL STATE OF CALIFORNIA Exp. 6/30/12

PLANS PREPARED BY:
DUDEK
605 Third Street Encinitas, CA 92024
760.942.5147 Fax 760.942.4508

City of Guadalupe
Public Works Dept.
918 Obispo Street, Guadalupe, California 93434
Tel 805-356-3891 Fax 805-343-5512

WASTEWATER TREATMENT PLANT IMPROVEMENT PROJECT

SLUDGE HANDLING AND AERATION

DWG. N-4
PROJECT NO. 6576
SHT. NO. 9 OF 50

P:\101.Engineering\Guadalupe, City of\6576-Wastewater Treatment Plant\6 Design Data\CAD6576\dwg\As-Builts 8-23-12\6576 SH09 N-4 11/14/2012 11:24 AM

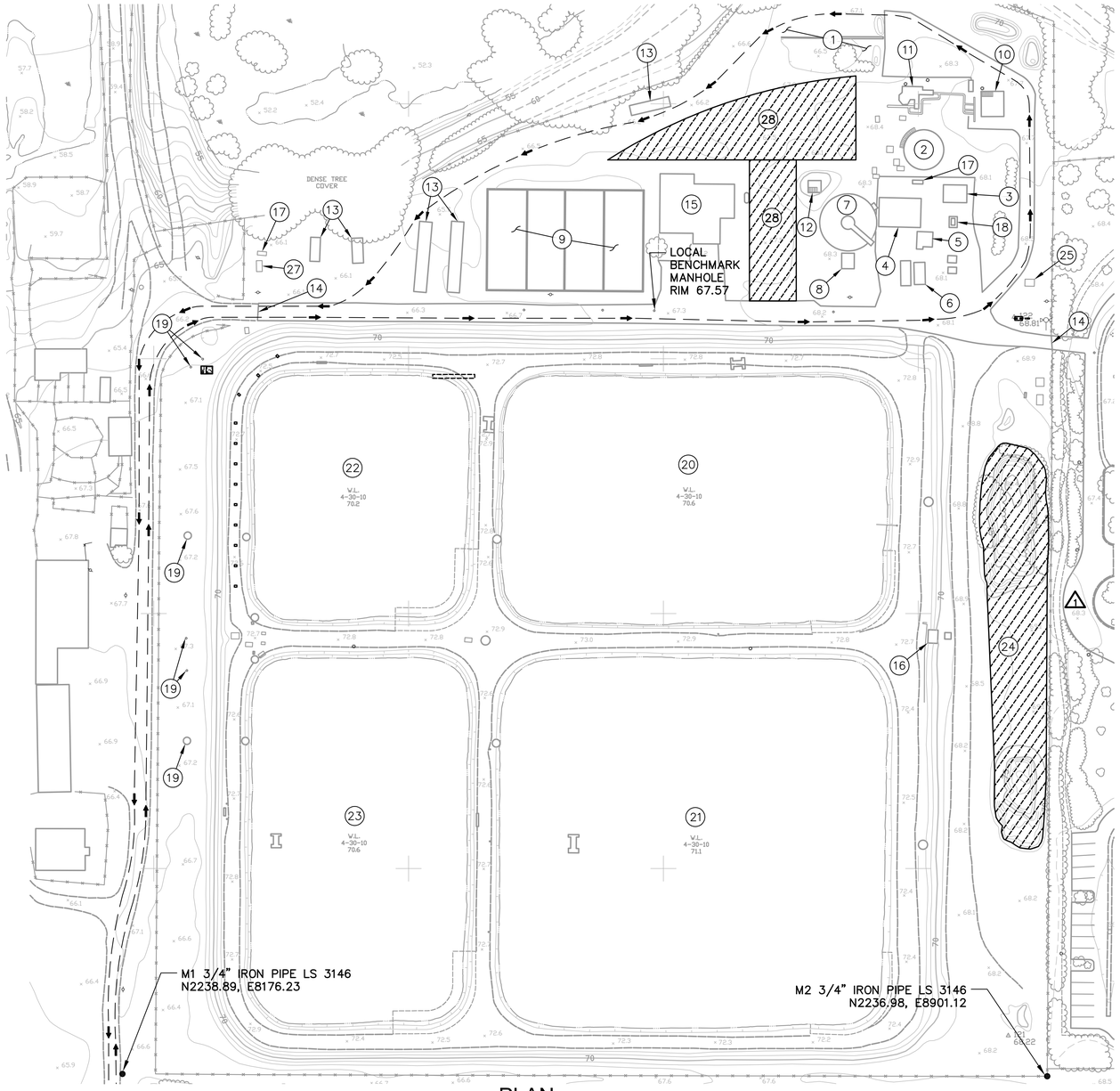

PLAN
SCALE: 1"=50'

GRAPHIC SCALE
0 50' 100'
SCALE: 1" = 50'

LEGEND:

1. ABANDONED SLUDGE DRYING BEDS
2. ABANDONED DIGESTER
3. ABANDONED SLUDGE HEATER BUILDING
4. ABANDONED INFLUENT PUMP STATION (PRIOR TO 1992)
5. ABANDONED GRIT CHAMBER (PRIOR TO 1992)
6. ABANDONED HEADWORKS (PRIOR TO 1992)
7. ABANDONED CLARIFIER
8. ABANDONED LAGOON PUMP STATION
9. EXISTING SLUDGE DRYING BEDS (METCALF & EDDY)
10. EXISTING HEADWORKS EQUIPMENT TO BE UPGRADED, SEE DWG M-1 & M-2
11. EXISTING GRIT CHAMBER EQUIPMENT TO BE UPGRADED, SEE DWG M-3 & M-4
12. EXISTING SPLITTER BOX
13. EXISTING MISCELLANEOUS TRAILERS
14. EXISTING MAIN PLANT ENTRANCE (SEE NOTE 1)
15. EXISTING CONTROL BUILDING
16. EXISTING DISTRIBUTION BOX
17. EXISTING EMERGENCY GENERATOR
18. EXISTING FUEL TANK
19. EXISTING EFFLUENT MANHOLES
20. EXISTING AIPS POND 1
21. EXISTING AIPS POND 2
22. EXISTING AIPS POND 3
23. EXISTING AIPS POND 4
24. EXCESS FILL LOCATION, SEE NOTE 3
25. EXISTING WATER BOOSTER PUMP STATION
26. NOT USED
27. EXISTING WEST ELECTRICAL SERVICE
28. CONTRACTOR STAGING AND LAYDOWN AREA

NOTES:

1. NO CONSTRUCTION ACCESS THROUGH EAST ENTRANCE.
2. DIRECTION FOR CONSTRUCTION TRAFFIC. - - - → - - -
3. BLEND NEW STOCKPILE WITH EXISTING STOCKPILE; GROOM STOCKPILES AND LEAVE WITH SWPPP IN PLACE. △1

RECORD DRAWING

THIS RECORD DRAWING IS NOT WARRANTED BUT IS BELIEVED TO REPRESENT CONDITIONS UPON COMPLETION OF CONSTRUCTION WITHIN REASONABLE TOLERANCES, BASED UPON THE INFORMATION FURNISHED TO THE ENGINEER PERTAINING TO CHANGES MADE DURING CONSTRUCTION.

REV	DESCRIPTION	ENGR	DATE	APPD	DATE
△1	AS-BUILT	TF/MH	11/2012		

PROGRESS: RECORD DRAWINGS
SUBMITTAL DATE: 11/14/2012
PROJECT MANAGER: T. FALK
DESIGNED BY: K.L.B, A.E.G, M.D.H
DRAWN BY: K.K, C.S, N.H
CHECKED BY: S. DEERING

REGISTERED PROFESSIONAL ENGINEER TOM C. FALK No. 63780 Exp. 6/30/12 CIVIL STATE OF CALIFORNIA

PLANS PREPARED BY:
DUDEK
605 Third Street Encinitas, CA 92024
760.942.5147 Fax 760.942.4508

City of Guadalupe
Public Works Dept.
918 Obispo Street, Guadalupe, California 93434
Tel 805-356-3891 Fax 805-343-5512

WASTEWATER TREATMENT PLANT IMPROVEMENT PROJECT

EXISTING SITE PLAN AND CONSTRUCTION STAGING

DWG. C-1
PROJECT NO. 6576
SHT. NO. 10 OF 50

P:\101.Engineering\Guadalupe, City of\6576-Wastewater Treatment Plant\6 Design Data\CAD6576\dwg\As-Builts 8-23-12\6576 SH10 C-1 11/14/2012 11:25 AM

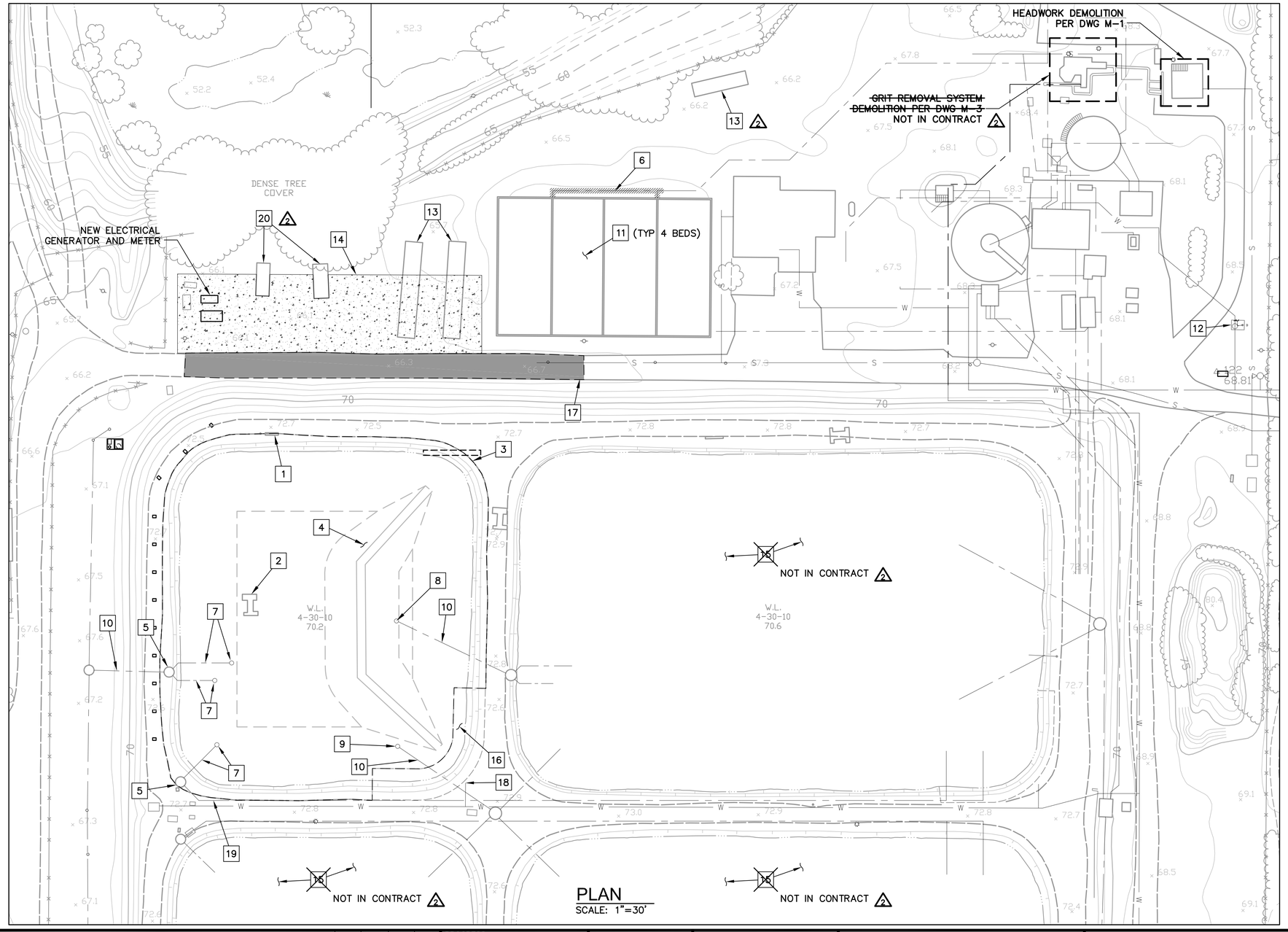

PLAN
SCALE: 1"=30'

DEMOLITION LEGEND

1. TEMPORARILY RELOCATE EXISTING AIPS CONTROL PANEL DURING CONSTRUCTION TO MAINTAIN PLANT OPERATION IN PONDS 1, 2, AND 4
2. REMOVE AND SALVAGE TO CITY EXISTING AERATOR, ELECTRICAL WIRING, ANCHORS, AND CABLES
3. REMOVE AND DISPOSE OF EXISTING GEOMEMBRANE LINER WITHIN LIMITS SHOWN.
4. REMOVE EXISTING INTERNAL EARTHEN BERM.
5. DEMOLISH EXISTING MANHOLE TO MINIMUM DEPTH OF 2 FT BELOW FINISHED GRADE. PLUG OUTLET PIPE AND FILL REMAINING RISER WITH 2-SLACK SLURRY. BACK FILL AND COMPACT TO FINISHED GRADE PER LINER MANUFACTURER'S RECOMMENDATIONS. RFI #09
6. DEMOLISH AND REMOVE EXISTING PIPING, PLUG PIPE WITH CONCRETE.
7. DEMOLISH AND REMOVE EXISTING PIPING PER DTL 1, DWG C-8. DEMOLISH AND REMOVE PIPING SUPPORT RISER, AND CONCRETE FOUNDATION.
8. DEMOLISH AND REMOVE EXISTING PIPING TO 6" BELOW EXISTING POND INVERT, CAP PIPE, AND DEMOLISH AND REMOVE ASSOCIATED PIPING FOUNDATION AND CONCRETE PAD.
9. DEMOLISH AND REMOVE EXISTING INLET PIPING PER DEL 1, DWG C-8., DEMOLISH AND REMOVE ASSOCIATED CONCRETE PAD AND FOUNDATION.
10. ABANDON IN PLACE EXISTING PIPING DRAIN AND PLUG EXISTING PIPE WITH CONCRETE AT MANHOLE.
11. CLEAR AND GRUB ALL EXISTING VEGETATION IN EXISTING SLUDGE DRYING BEDS, REMOVE EXISTING SAND LAYER, EXISTING GRAVEL LAYER, AND EXISTING UNDERDRAIN PIPING.
12. DEMOLISH AND REMOVE EXISTING WATER BOOSTER PUMP PER DTL 2, DWG C-5. RFI #40
13. CITY WILL REMOVE AND SALVAGE MATERIALS FROM THE TRAILERS PRIOR TO CONSTRUCTION. CONTRACTOR SHALL REMOVE AND DISPOSE OF TRAILERS.
14. CLEAR AND GRUB AREA WITHIN LIMITS SHOWN AT START OF PROJECT. SEE DWG C-3 FOR EXTENT OF AREA TO BE CLEARED. RFI #06
15. ~~DRAIN, DREDGE, AND ABANDON EXISTING POND ACCORDING TO MAINTENANCE OF PLANT OPERATION SPECIFICATION SECTION 01014.~~ NOT IN CONTRACT
16. PROTECT IN PLACE EXISTING CONCRETE SCUM RAMP.
17. DEMOLISH AND REMOVE ASPHALT CONCRETE PAVING WITHIN LIMITS SHOWN, SEE DWG C-3 FOR COORDINATES.
18. PROTECT EXISTING HOSE BIBB.
19. ABANDONED RECYCLE FORCE MAIN. REMOVE AND DISPOSE OF AS NECESSARY. PLUG PIPE WITH CONCRETE.
20. CITY TO RELOCATE EXISTING TRAILERS.

GRAPHIC SCALE
0 30' 60'
SCALE: 1" = 30'

RECORD DRAWING
THIS RECORD DRAWING IS NOT WARRANTED BUT IS BELIEVED TO REPRESENT CONDITIONS UPON COMPLETION OF CONSTRUCTION WITHIN REASONABLE TOLERANCES, BASED UPON THE INFORMATION FURNISHED TO THE ENGINEER PERTAINING TO CHANGES MADE DURING CONSTRUCTION.

REV	DESCRIPTION	ENGR	DATE	APPD	DATE
2	AS-BUILT	TF/MH	11/2012		
1	ADDENDUM No. 1		8/1/11		

PROGRESS: RECORD DRAWINGS
SUBMITTAL DATE: 11/14/2012
PROJECT MANAGER: T. FALK
DESIGNED BY: K.L.B, A.E.G, M.D.H
DRAWN BY: K.K, C.S, N.H
CHECKED BY: S. DEERING

REGISTERED PROFESSIONAL ENGINEER TOM C. FALK No. 69780 Exp. 6/30/12 CIVIL STATE OF CALIFORNIA

PLANS PREPARED BY:
DUDEK
605 Third Street Encinitas, CA 92024
760.942.5147 Fax 760.942.4508

City of Guadalupe
Public Works Dept.
918 Obispo Street, Guadalupe, California 93434
Tel 805-356-3891 Fax 805-343-5512

WASTEWATER TREATMENT PLANT IMPROVEMENT PROJECT

DEMOLITION AND ABANDONMENT PLAN

DWG. C-2
PROJECT NO. 6576
SHT. NO. 11 OF 50

P:\101.Engineering\Guadalupe, City of\6576-Wastewater Treatment Plant\6 Design Data\CAD6576\dwg\As-Builts 8-23-12\6576 SH11 C-2 11/14/2012 11:25 AM

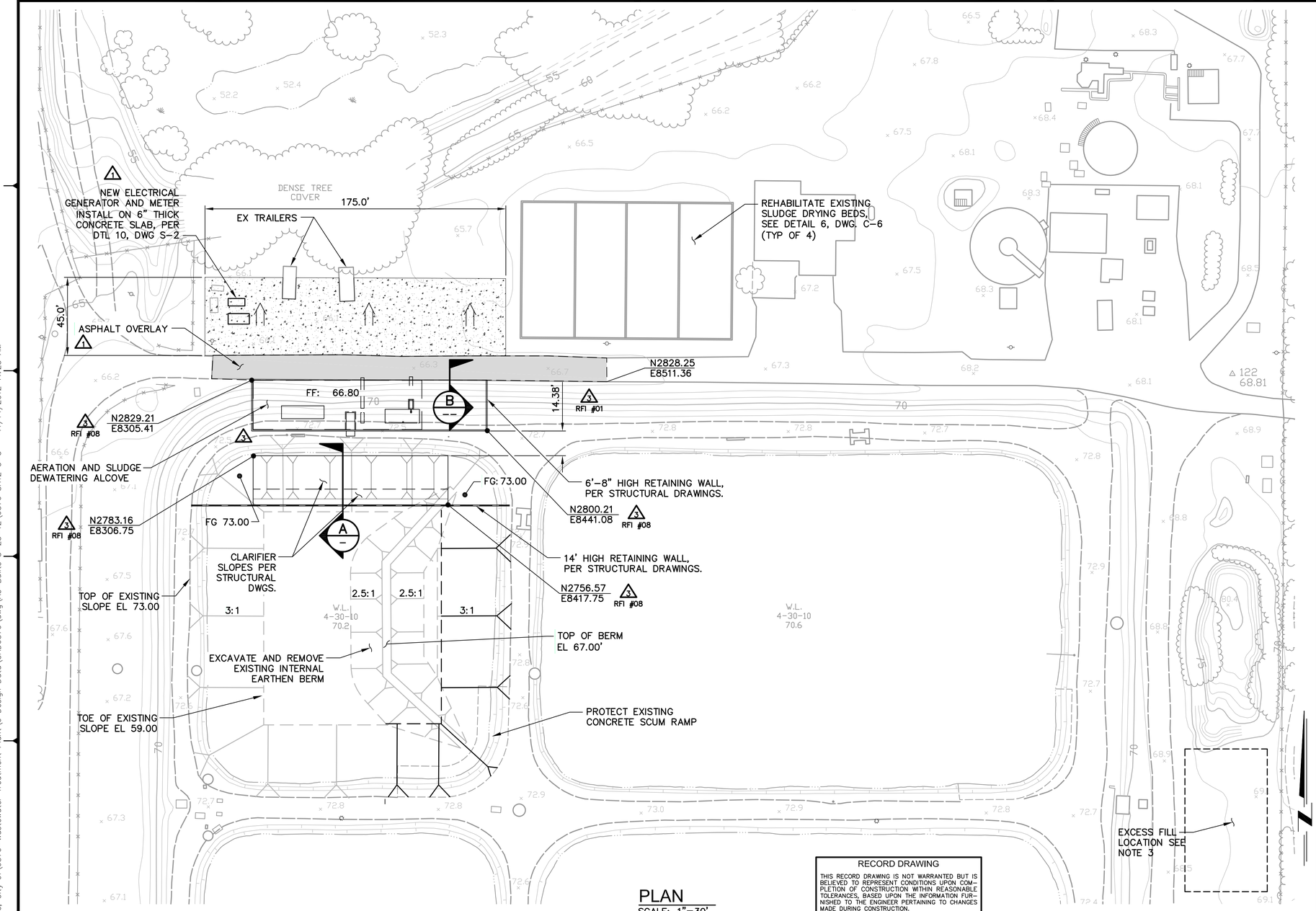

PLAN
SCALE: 1"=30'

RECORD DRAWING

THIS RECORD DRAWING IS NOT WARRANTED BUT IS BELIEVED TO REPRESENT CONDITIONS UPON COMPLETION OF CONSTRUCTION WITHIN REASONABLE TOLERANCES, BASED UPON THE INFORMATION FURNISHED TO THE ENGINEER PERTAINING TO CHANGES MADE DURING CONSTRUCTION.

NOTES:

1. REMOVE AND DISPOSE OF EXISTING AIPS CONTROL PANEL PER DWG E-3.
2. SEE SWANSON INTERNATIONAL CITY OF GUADALUPE WWTP 2002 RECORD DRAWINGS FOR DIMENSIONS OF EXISTING PONDS.
3. STOCKPILE AREA SHALL BE NEATLY PLACED TO A MAXIMUM HEIGHT OF 8 FT AND WITH SIDE SLOPES NOT TO EXCEED 3:1. APPLY DUST CONTROL SURFACE BINDER AS REQUIRED DURING CONSTRUCTION TO ALLEVIATE BLOWING DUST AND AFTER COMPLETION OF CONSTRUCTION

SURFACE IMPROVEMENT SYMBOLS

A.C. PAVEMENT PER DTL 3, DWG C-6

GRAVEL ROADWAY PER DTL 4, DWG C-6

SLOPE TO DRAIN DIRECTION

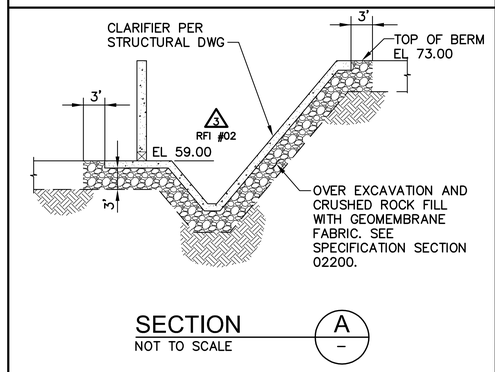

SECTION A
NOT TO SCALE

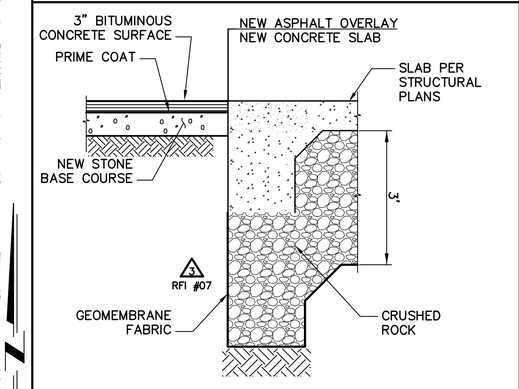

SECTION B
NOT TO SCALE

GRAPHIC SCALE
0 30' 60'
SCALE: 1" = 30'

REV	DESCRIPTION	ENGR	DATE	APPD	DATE
3	AS-BUILT	TF/MH	11/2012		
2	ADDENDUM No.2		8/8/11		
1	ADDENDUM No.1		8/1/11		

PROGRESS: RECORD DRAWINGS
SUBMITTAL DATE: 11/14/2012
PROJECT MANAGER: T. FALK
DESIGNED BY: K.L.B, A.E.G, M.D.H
DRAWN BY: K.K, C.S, N.H
CHECKED BY: S. DEERING

REGISTERED PROFESSIONAL ENGINEER TOM C. FALK No. 69780 Exp. 6/30/12 CIVIL STATE OF CALIFORNIA

PLANS PREPARED BY:
DUDEK
605 Third Street Encinitas, CA 92024
760.942.5147 Fax 760.942.4508

City of Guadalupe
Public Works Dept.
918 Obispo Street, Guadalupe, California 93434
Tel 805-356-3891 Fax 805-343-5512

WASTEWATER TREATMENT PLANT IMPROVEMENT PROJECT

GRADING PLAN

DWG. C-3
PROJECT NO. 6576
SHT. NO. 12 OF 50

P:\101.Engineering\Guadalupe, City of\6576-Wastewater Treatment Plant\6 Design Data\CAD6576\dwg\As-Builts 8-23-12\6576 SH12 C-3 11/14/2012 11:25 AM

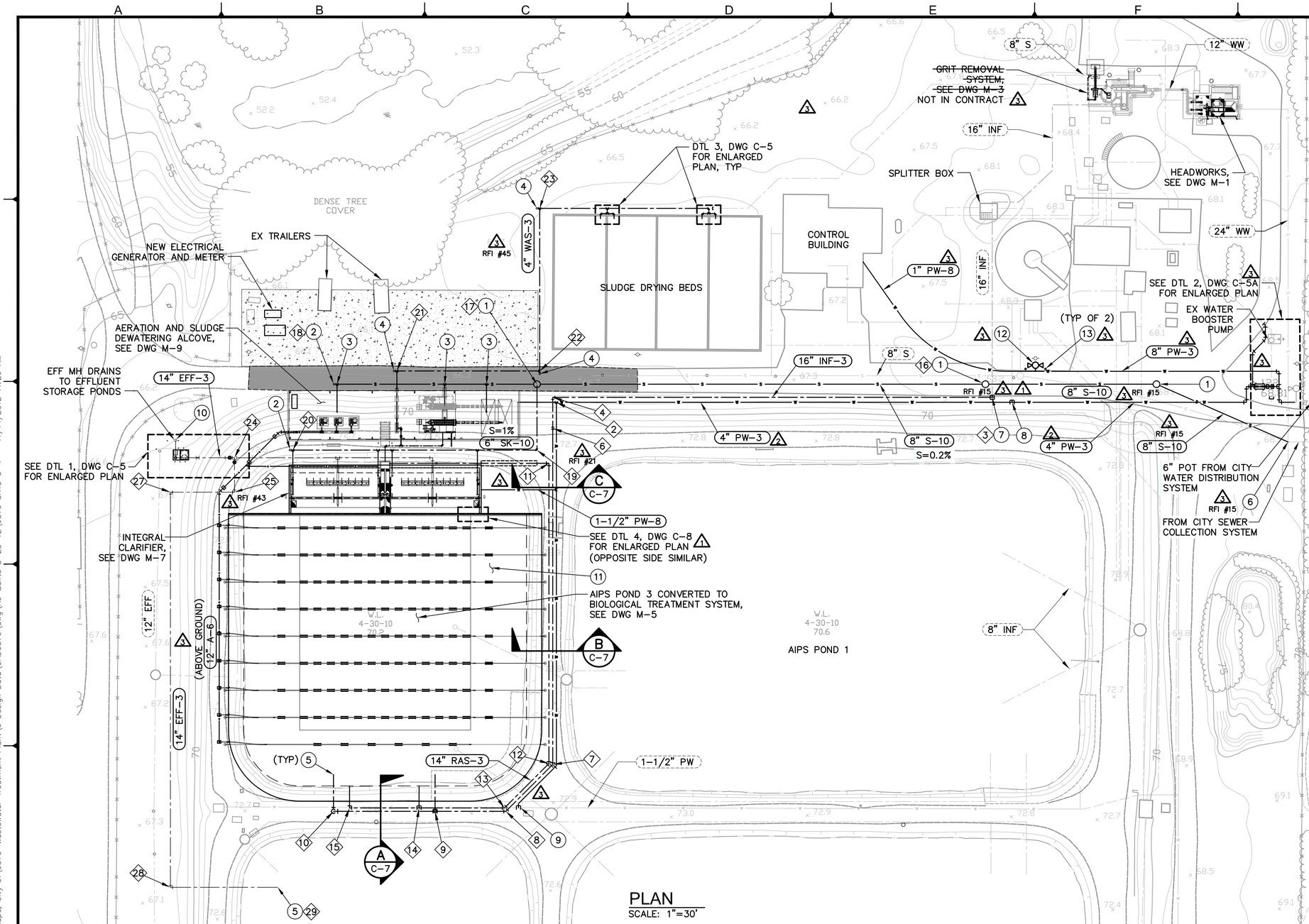

PLAN
SCALE: 1"=30'

IMPROVEMENT LEGEND:

1. MANHOLE PER CITY OF SANTA MARIA STANDARD DWG SS-10C. (1)
2. SEWER CLEAN-OUT PER CITY OF SANTA MARIA STANDARD DWG SS-12B.
3. SEWER LATERAL INSTALLATION PER CITY OF SANTA MARIA STANDARD DWG SS-14A.
4. PRESSURE CLEAN-OUT PER DTL 5, DWG C-6.
5. INSTALL LINER PIPE PENETRATION PER DTL 3, C-7.
6. CONNECT NEW 8" SEWER LINE TO EXISTING MANHOLE STRUCTURE. MANHOLE SHALL BE CORE DRILLED AND MANHOLE CONNECTION SHALL BE SEALED WITH MECHANICAL SEAL, LINK-SEAL OR APPROVED EQUAL. INSTALL FLEXIBLE COUPLING WITHIN ONE FOOT OF THE MANHOLE BASE. JACK HAMMERING SHALL NOT BE ALLOWED. (1) (3) RFI #15
7. CONNECT TO EXISTING 16" PIPE WITH 16" MJ TEE PER DTL 2, DWG C-8.
8. CONNECT EXISTING 2" PLANT WATER LINE TO NEW 4" PLANT WATER LINE.
9. CONNECT NEW 2" PLANT WATER LINE TO EXISTING 1 1/2" PLANT WATER LINE.
10. CONNECT NEW 14" EFFLUENT LINE TO EXISTING MANHOLE STRUCTURE. MANHOLE SHALL BE CORE DRILLED AND MANHOLE CONNECTION SHALL BE SEALED WITH MECHANICAL SEAL, LINK-SEAL OR APPROVED EQUAL. INSTALL FLEXIBLE COUPLING WITHIN ONE FOOT OF THE MANHOLE BASE. JACK HAMMERING SHALL NOT BE ALLOWED. (3) RFI #44
11. INSTALL NEW 60 MIL HDPE POND LINER PER SPECIFICATION 13700. SEE DTL 1, DWG C-7 FOR ANCHOR TRENCH DETAIL. SEE DTL 2, DWG C-7 FOR CONCRETE EMBEDMENT STRIP DETAIL.
12. INSTALL FIRE HYDRANT. (3)
13. INSTALL BOLLARDS PER CITY OF SANTA MARIA STANDARD DWG MS-12. (3)

NOTES:

1. SEE DRAWING C-8 FOR CONTROL DATA. (XX)
2. REFER TO MANUFACTURER INSTALLATION DRAWINGS AND SPECIFICATION SECTION 11460 FOR INSTALLATION OF ALL BIOLOGICAL SYSTEM EQUIPMENT AND MATERIALS.
3. SEE DWG C-5B FOR PIPING PROFILE OF NEW 8" SEWER LINE. (3) RFI #15

GRAPHIC SCALE
0 30' 60'
SCALE: 1" = 30'

RECORD DRAWING
THIS RECORD DRAWING IS NOT WARRANTED BUT IS BELIEVED TO REPRESENT CONDITIONS UPON COMPLETION OF CONSTRUCTION WITHIN REASONABLE TOLERANCES, BASED UPON THE INFORMATION FURNISHED TO THE ENGINEER PERTAINING TO CHANGES MADE DURING CONSTRUCTION.

REV	DESCRIPTION	ENGR	DATE	APPD	DATE
3	AS-BUILT	TF/MH	11/2012		
2	ADDENDUM No. 2		8/8/11		
1	ADDENDUM No. 1		8/1/11		

PROGRESS: RECORD DRAWINGS
SUBMITTAL DATE: 11/14/2012
PROJECT MANAGER: T. FALK
DESIGNED BY: K.L.B, A.E.G, M.D.H
DRAWN BY: K.K, C.S, N.H
CHECKED BY: S. DEERING

REGISTERED PROFESSIONAL ENGINEER TIM C. FALK Exp. 6/30/12 CIVIL STATE OF CALIFORNIA

PLANS PREPARED BY:
DUDEK
605 Third Street Encinitas, CA 92024
760.942.5147 Fax 760.942.4508

City of Guadalupe
Public Works Dept.
918 Obispo Street, Guadalupe, California 93434
Tel 805-356-3891 Fax 805-343-5512

WASTEWATER TREATMENT PLANT IMPROVEMENT PROJECT

YARD PIPING

DWG. C-4
PROJECT NO. 6576
SHT. NO. 13 OF 50

P:\101.Engineering\Guadalupe, City of\6576-Wastewater Treatment Plant\6 Design Data\CAD6576\dwg\As-Builts 8-23-12\6576 SH13 C-4 11/14/2012 11:26 AM

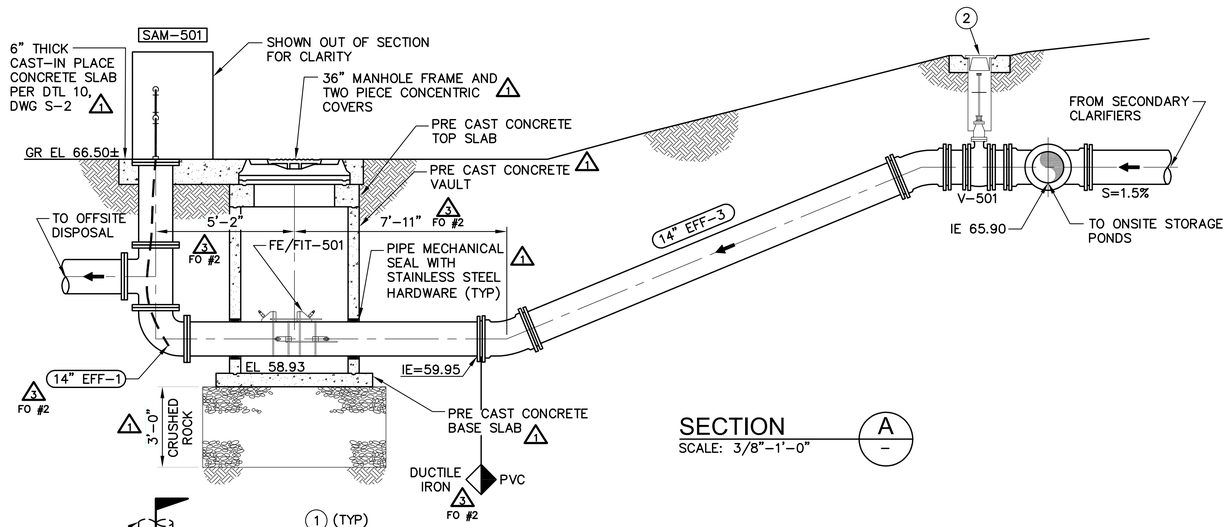

SECTION A

SCALE: 3/8"=1'-0"

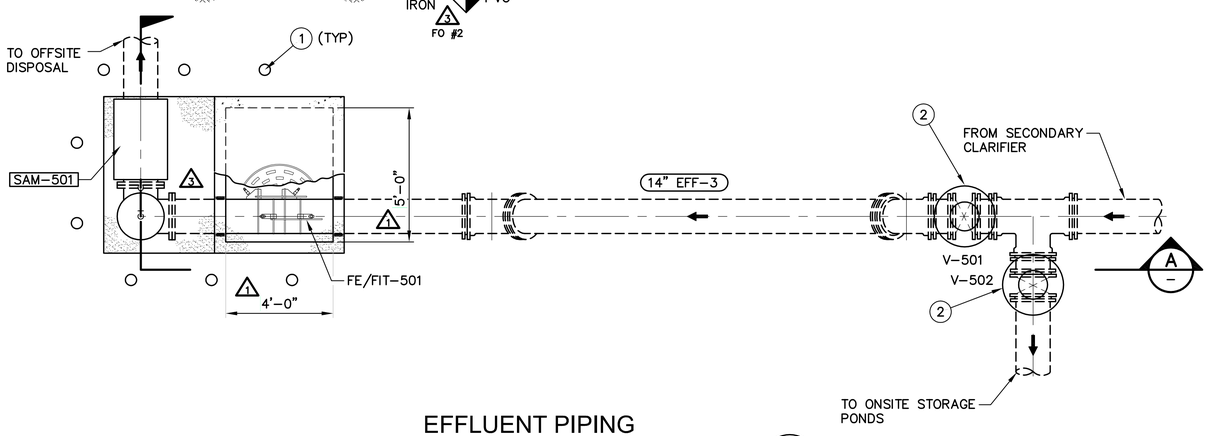

EFFLUENT PIPING ENLARGED PLAN DETAIL

SCALE: 3/8"=1'-0"

IMPROVEMENT LEGEND:

1. BOLLARD PER CITY OF SANTA MARIA STANDARD DRAWING MS-12.
2. VALVE BOX AND RISER PER CITY OF SANTA MARIA STANDARD DRAWING WA-21B.

NOT USED

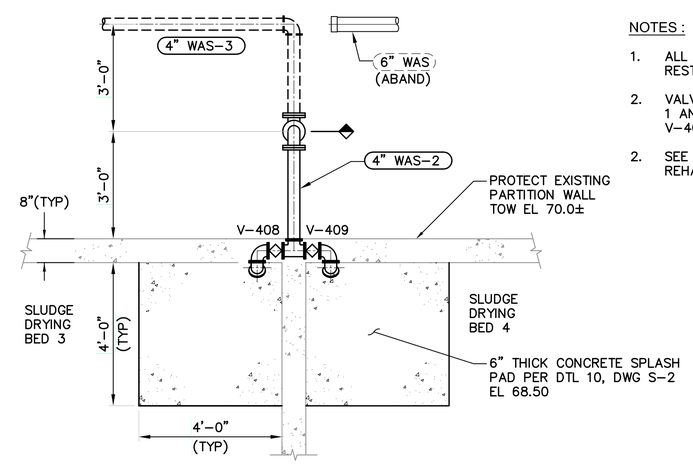

DRYING BED INLET PIPING ENLARGED PLAN DETAIL

NOT TO SCALE

NOTES:

1. ALL BURIED PIPING JOINTS SHALL BE RESTRAINED JOINT WITH THRUST BLOCKS. RFI #45
2. VALVE NUMBERS FOR SLUDGE DRYING BEDS 1 AND 2 ARE AS FOLLOWS V-406 AND V-407.
2. SEE DTL 6, DWG C-6 FOR DRYING BED REHABILITATION.

RECORD DRAWING

THIS RECORD DRAWING IS NOT WARRANTED BUT IS BELIEVED TO REPRESENT CONDITIONS UPON COMPLETION OF CONSTRUCTION WITHIN REASONABLE TOLERANCES, BASED UPON THE INFORMATION FURNISHED TO THE ENGINEER PERTAINING TO CHANGES MADE DURING CONSTRUCTION.

REV	DESCRIPTION	ENGR	DATE	APPD	DATE
3	AS-BUILT	TF/MH	11/2012		
2	ADDENDUM No. 2		8/8/11		
1	ADDENDUM No. 1		8/1/11		

PROGRESS: RECORD DRAWINGS
SUBMITTAL DATE: 11/14/2012
PROJECT MANAGER: T. FALK
DESIGNED BY: K.L.B, A.E.G, M.D.H
DRAWN BY: K.K, C.S, N.H
CHECKED BY: S. DEERING

REGISTERED PROFESSIONAL ENGINEER TOM C. FALK No. 67700 Exp. 6/30/12 CIVIL STATE OF CALIFORNIA

PLANS PREPARED BY:
DUDEK
605 Third Street Encinitas, CA 92024
760.942.5147 Fax 760.942.4508

City of Guadalupe Public Works Dept.
918 Obispo Street, Guadalupe, California 93434
Tel 805-356-3891 Fax 805-343-5512

WASTEWATER TREATMENT PLANT IMPROVEMENT PROJECT

ENLARGED CIVIL PLANS AND SECTIONS

DWG. C-5
PROJECT NO. 6576
SHT. NO. 14 OF 50

P:\101:Engineering\Guadalupe, City of\6576-Wastewater Treatment Plant\6 Design Data\CAD6576\dwg\As-Builts 8-23-12\6576 SH14 C-5 11/14/2012 11:26 AM

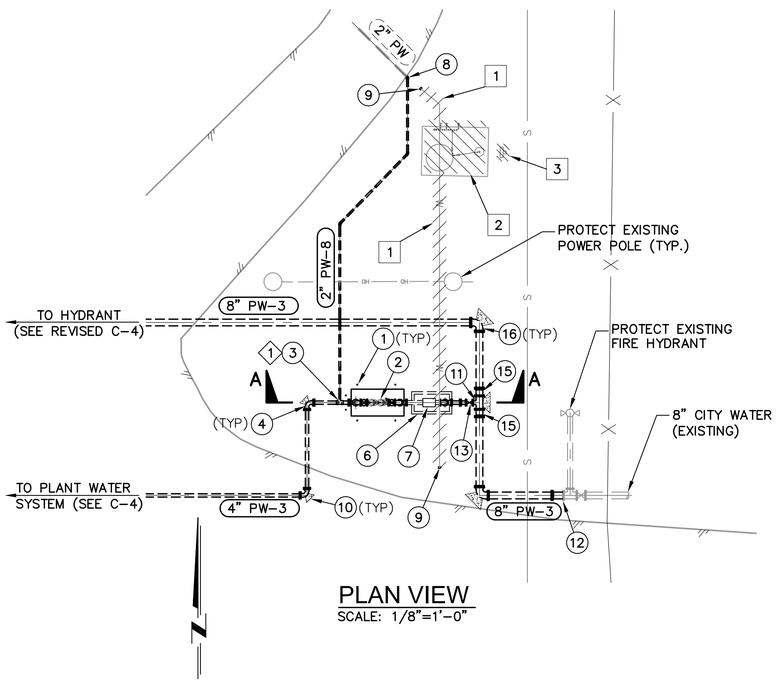

PLAN VIEW

SCALE: 1/8"=1'-0"

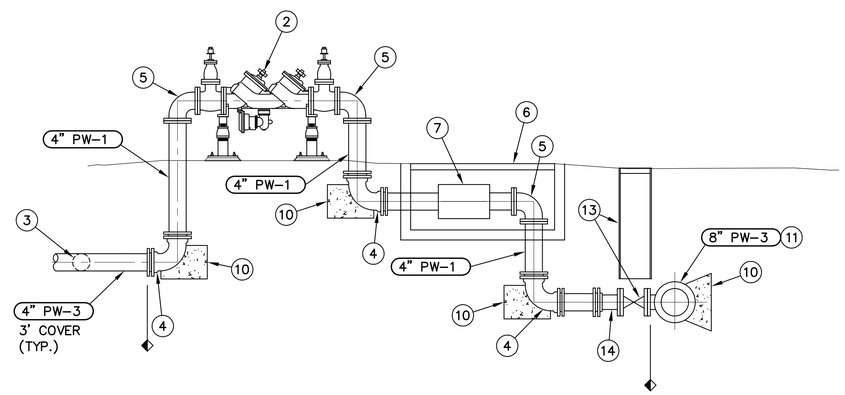

SECTION A-A

NOT TO SCALE

DEMOLITION LEGEND

1. ABANDON IN PLACE EXISTING 2" PLANT WATER.
2. DEMOLISH AND REMOVE EXISTING TANK AND APPURTENANCES. REMOVE EXISTING ABOVE GROUND PIPING 12" BELOW EXISTING GRADE.
3. REMOVE EXISTING CONTROL PANEL, 4"x4" POST AND ELECTRICAL WIRING.

IMPROVEMENT LEGEND:

1. BOLLARD PER CITY OF SANTA MARIA STANDARD DRAWING MS-12.
2. 4" BACKFLOW PREVENTER SIMILAR TO CITY OF SANTA MARIA STANDARD DRAWING WA-27C.
3. 2" DOUBLE STRAP WITH CORPORATION STOP SIMILAR TO SANTA MARIA STD DWG WA-16A.
4. 4" DUCTILE IRON RESTRAINED MECHANICAL JOINT 90° BEND.
5. 4" DUCTILE IRON FLANGED 90° BEND.
6. METER VAULT PER SANTA MARIA STD DWG WA-18A. CONTRACTOR TO VERIFY SIZE OF VAULT.
7. 4" WATER METER (PROVIDED BY CITY), INSTALL PER SANTA MARIA STD DWG WA-18A.
8. CONNECT TO EXISTING 2" PLANT WATER WITH 2" PVC 45° ELBOW.
9. 2" PVC CAP.
10. THRUST BLOCK, SEE SANTA MARIA STD DWG WA-13 AND WA-18A.
11. 8" X 4" FLG REDUCING TEE.
12. POINT OF CONNECTION.
13. 4" RESILIENT-SEATED GATE VALVE AND RISER PER SANTA MARIA STD DWG WA-21B.
14. 4" FLG X MJ ADAPTER.
15. 8" FLG X MJ ADAPTER.
16. 8" DUCTILE IRON RESTRAINED MECHANICAL JOINT 90° BEND.

NOTE :

SEE DRAWING C-8 FOR CONTROL DATA.

RECORD DRAWING

THIS RECORD DRAWING IS NOT WARRANTED BUT IS BELIEVED TO REPRESENT CONDITIONS UPON COMPLETION OF CONSTRUCTION WITHIN REASONABLE TOLERANCES, BASED UPON THE INFORMATION FURNISHED TO THE ENGINEER PERTAINING TO CHANGES MADE DURING CONSTRUCTION.

REV	DESCRIPTION	ENGR	DATE	APPD	DATE
1	AS-BUILT	TF/MH	11/2012		

PROGRESS: RECORD DRAWINGS
SUBMITTAL DATE: 11/14/2012
PROJECT MANAGER: T. FALK
DESIGNED BY: K.L.B, A.E.G, M.D.H
DRAWN BY: K.K, C.S, N.H
CHECKED BY: S. DEERING

REGISTERED PROFESSIONAL ENGINEER COM C. FALK CIVIL STATE OF CALIFORNIA Exp. 6/30/10 Exp. 6/30/12

PLANS PREPARED BY:
DUDEK
605 Third Street Encinitas, CA 92024
760.942.5147 Fax 760.942.4508

City of Guadalupe
Public Works Dept.
918 Obispo Street, Guadalupe, California 93434
Tel 805-356-3891 Fax 805-343-5512

WASTEWATER TREATMENT PLANT IMPROVEMENT PROJECT

CITY WATER CONNECTION
ENLARGED PLAN DETAIL

DWG. C-5A
PROJECT NO. 6576
SHT. NO. 15 OF 50

P:\101.Engineering\Guadalupe, City of\6576-Wastewater Treatment Plant\6 Design Data\CAD6576\dwg\As-Builts 8-23-12\6576 SH15 C-5A 11/14/2012 11:26 AM

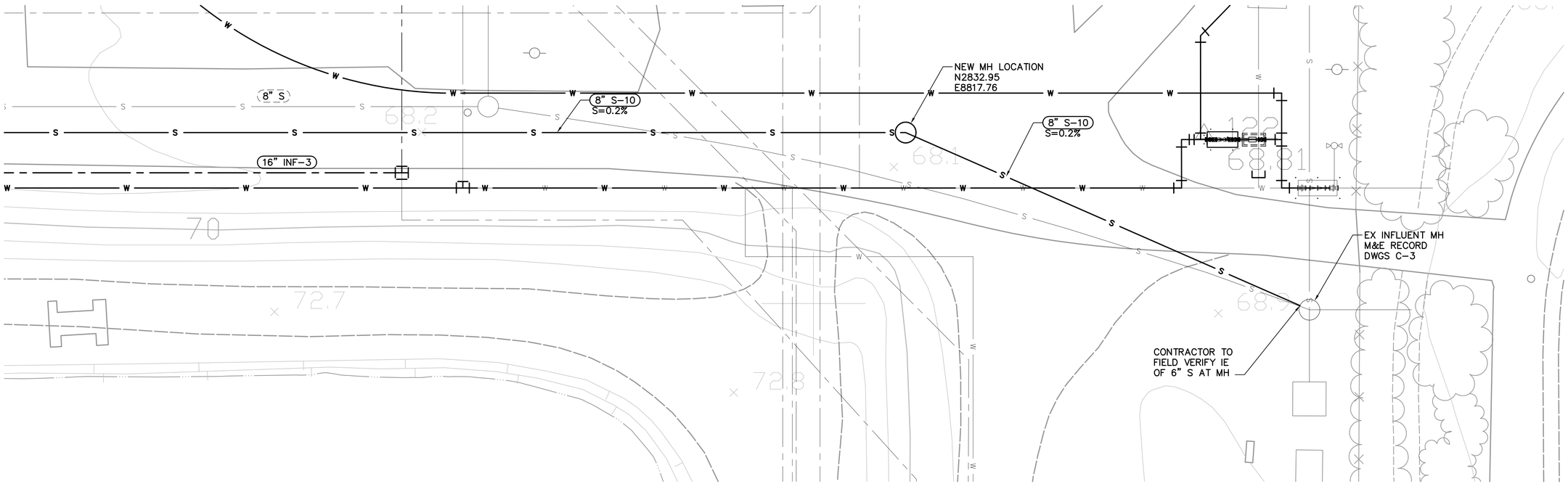

PLAN

SCALE: 1"=10'

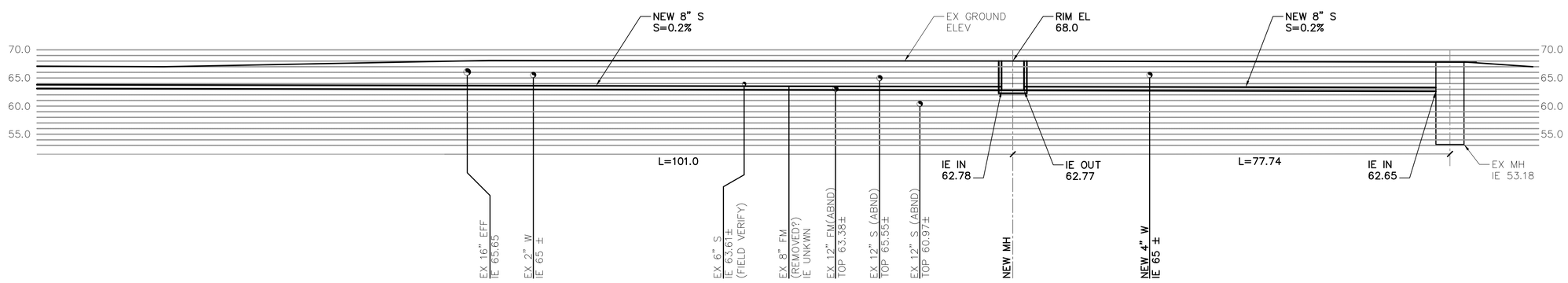

PROFILE

SCALE: 1"=10' HORZ
1"=10' VERT

RECORD DRAWING

THIS RECORD DRAWING IS NOT WARRANTED BUT IS BELIEVED TO REPRESENT CONDITIONS UPON COMPLETION OF CONSTRUCTION WITHIN REASONABLE TOLERANCES, BASED UPON THE INFORMATION FURNISHED TO THE ENGINEER PERTAINING TO CHANGES MADE DURING CONSTRUCTION.

REV	DESCRIPTION	ENGR	DATE	APPD	DATE
1	AS-BUILT	TF/MH	11/2012		

PROGRESS: RECORD DRAWINGS
SUBMITTAL DATE: 11/14/2012
PROJECT MANAGER: T. FALK
DESIGNED BY: K.L.B, A.E.G, M.D.H
DRAWN BY: K.K, C.S, N.H
CHECKED BY: S. DEERING

REGISTERED PROFESSIONAL ENGINEER TOM C. FALK CIVIL STATE OF CALIFORNIA Exp. 6/30/12

PLANS PREPARED BY:
DUDEK
605 Third Street Encinitas, CA 92024
760.942.5147 Fax 760.942.4508

City of Guadalupe
Public Works Dept.
918 Obispo Street, Guadalupe, California 93434
Tel 805-356-3891 Fax 805-343-5512

WASTEWATER TREATMENT PLANT IMPROVEMENT PROJECT

SEWER PIPING PLAN AND PROFILE

DWG. C-5B
PROJECT NO. 6576
SHT. NO. 16 OF 50

P:\101.Engineering\Guadalupe, City of\6576-Wastewater Treatment Plant\6 Design Data\CAD6576\dwg\As-Builts 8-23-12\6576 SH16 C-5B 11/14/2012 11:26 AM

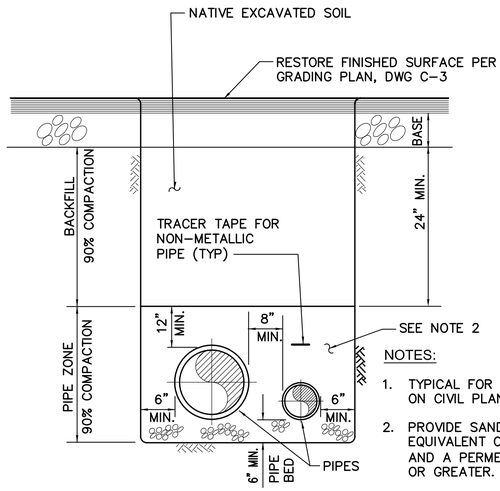

NOTES:

1. TYPICAL FOR ALL PIPING SHOWN ON CIVIL PLANS.
2. PROVIDE SAND WITH A SAND EQUIVALENT OF 30 OR GREATER AND A PERMEABILITY OF 1.4 IN/HR OR GREATER.
3. CONTRACTOR SHALL REMOVE ALL ORGANIC MATERIAL, RUBBISH, DEBRIS, AND ROCKS GREATER THAN SIX INCHES IN DIAMETER.

TYPICAL PIPE TRENCH DETAIL (1 / VAR)

NOT TO SCALE

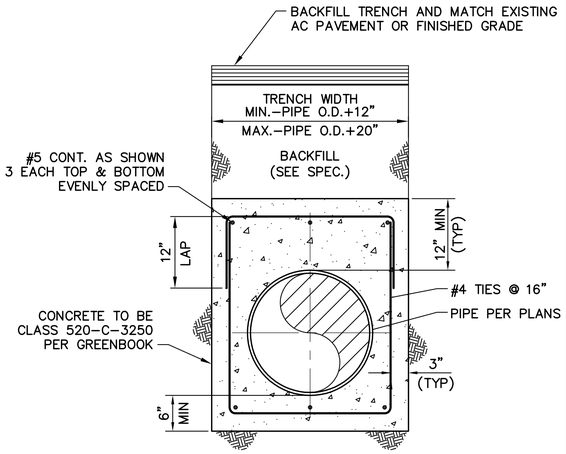

TYPICAL PIPE ENCASEMENT DETAIL (2 / VAR)

NOT TO SCALE

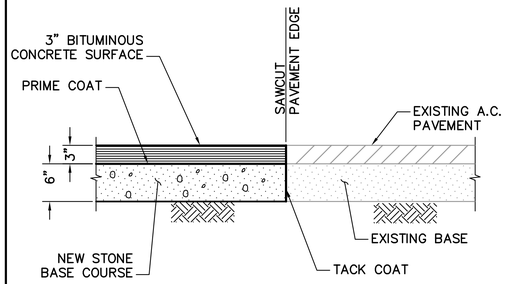

TYPICAL PAVING SECTION (3 / C-3)

NOT TO SCALE

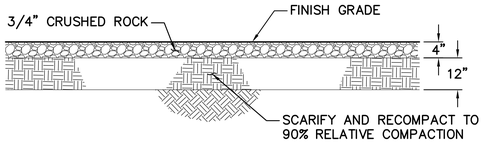

NOTE:

1. SEE SPECIFICATION SECTION 02200 FOR SITE PREPARATION, EXCAVATION AND EARTHWORK.

GRAVEL ROADWAY SECTION (4 / C-3)

NOT TO SCALE

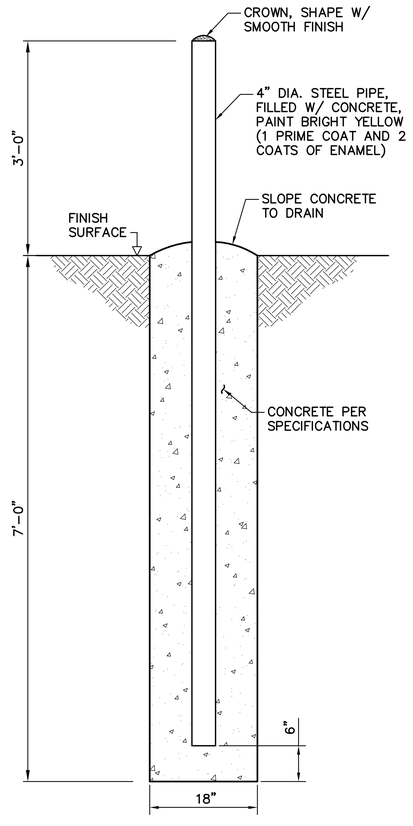

ANCHOR POST DETAIL (7 / VAR)

NOT TO SCALE

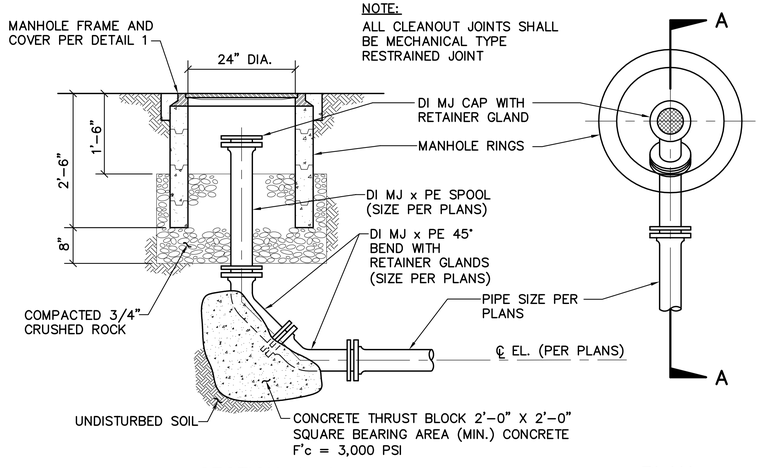

NOTE:
ALL CLEANOUT JOINTS SHALL BE MECHANICAL TYPE RESTRAINED JOINT

SECTION A-A

PLAN

RECORD DRAWING

THIS RECORD DRAWING IS NOT WARRANTED BUT IS BELIEVED TO REPRESENT CONDITIONS UPON COMPLETION OF CONSTRUCTION WITHIN REASONABLE TOLERANCES, BASED UPON THE INFORMATION FURNISHED TO THE ENGINEER PERTAINING TO CHANGES MADE DURING CONSTRUCTION.

PRESSURE CLEANOUT DETAIL (5 / C-4)

NOT TO SCALE

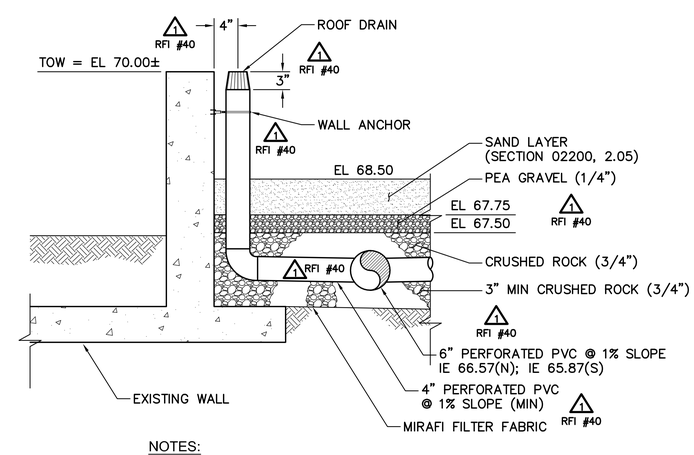

NOTES:

1. SEE SPECIFICATION SECTION 02200 FOR SITE PREPARATION, EXCAVATION AND EARTHWORK.
2. REFER TO DWG C-2 FOR DEMOLITION AT DRYING BEDS.

DRYING BED REHABILATION SECTION (6 / C-3)

NOT TO SCALE

REV	DESCRIPTION	ENGR	DATE	APPD	DATE
1	AS-BUILT	TF/MH	11/2012		

PROGRESS: RECORD DRAWINGS
SUBMITTAL DATE: 11/14/2012
PROJECT MANAGER: T. FALK
DESIGNED BY: K.L.B, A.E.G, M.D.H
DRAWN BY: K.K, C.S, N.H
CHECKED BY: S. DEERING

REGISTERED PROFESSIONAL ENGINEER — TIM C. FALK — Exp. 6/30/12 — CIVIL — STATE OF CALIFORNIA

PLANS PREPARED BY:
DUDEK
605 Third Street Encinitas, CA 92024
760.942.5147 Fax 760.942.4508

City of Guadalupe
Public Works Dept.
918 Obispo Street, Guadalupe, California 93434
Tel 805-356-3891 Fax 805-343-5512

WASTEWATER TREATMENT PLANT IMPROVEMENT PROJECT

CIVIL DETAILS 1

DWG. C-6
PROJECT NO. 6576
SHT. NO. 17 OF 50

P:\101.Engineering\Guadalupe, City of\6576-Wastewater Treatment Plant\6 Design Data\CAD6576\dwg\As-Builts 8-23-12\6576 SH17 C-6 11/14/2012 11:26 AM

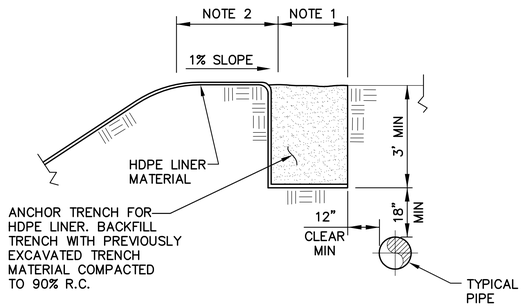

NOTES:

1. USE SAND BAGS AS GEOMEMBRANE WEIGHTS IN TRENCH DURING GEOMEMBRANE INSTALLATION.
2. CONTRACTOR TO FIELD VERIFY DIMENSIONS PRIOR TO SUBMITTAL OF SHOP DRAWINGS.

LINER ANCHOR TRENCH DETAIL (1 / VAR)

NOT TO SCALE

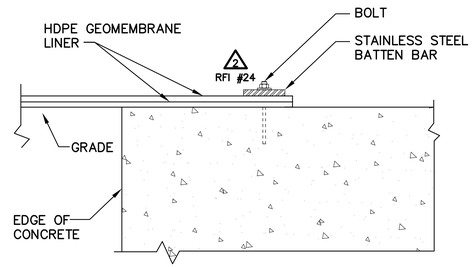

CONCRETE EMBEDMENT STRIP DETAIL (2 / VAR)

NOT TO SCALE

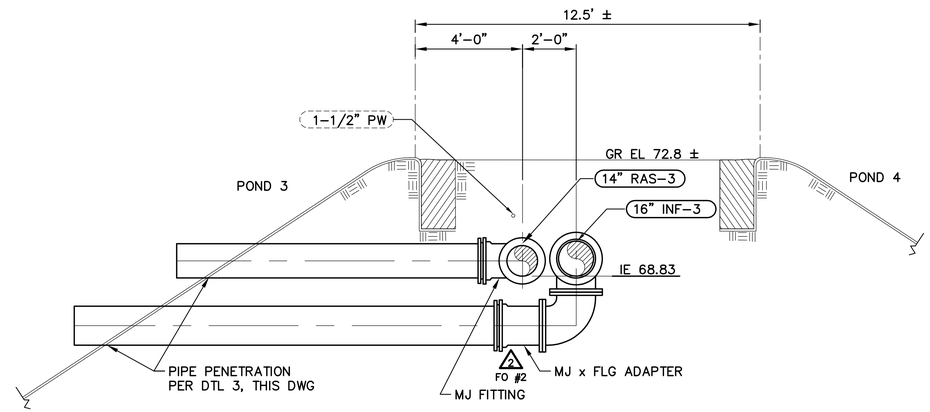

SECTION (A / C-4)

SCALE: 3/8"=1'-0"

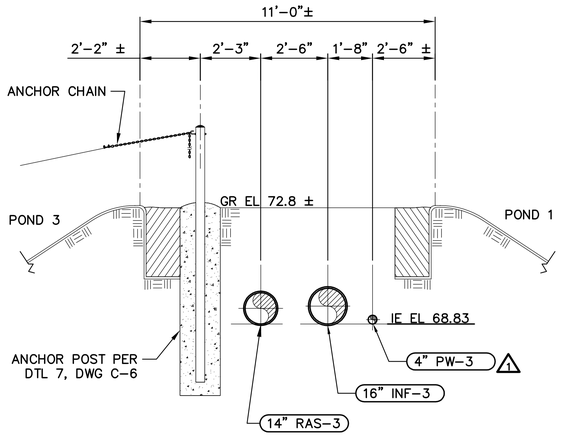

SECTION (B / C-4)

SCALE: 3/8"=1'-0"

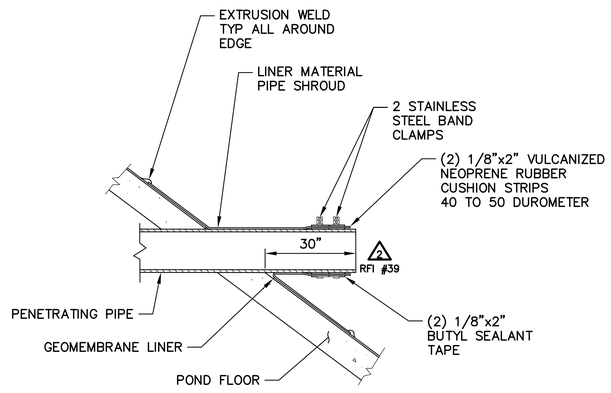

LINER PIPE PENETRATION DETAIL (3 / VAR)

NOT TO SCALE

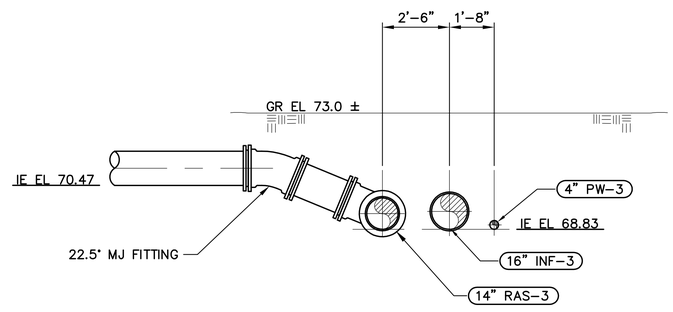

SECTION (C / C-4)

SCALE: 3/8"=1'-0"

RECORD DRAWING

THIS RECORD DRAWING IS NOT WARRANTED BUT IS BELIEVED TO REPRESENT CONDITIONS UPON COMPLETION OF CONSTRUCTION WITHIN REASONABLE TOLERANCES, BASED UPON THE INFORMATION FURNISHED TO THE ENGINEER PERTAINING TO CHANGES MADE DURING CONSTRUCTION.

REV	DESCRIPTION	ENGR	DATE	APPD	DATE
2	AS-BUILT	TF/MH	11/2012		
1	ADDENDUM No. 2		8/8/11		

PROGRESS: RECORD DRAWINGS
SUBMITTAL DATE: 11/14/2012
PROJECT MANAGER: T. FALK
DESIGNED BY: K.L.B, A.E.G, M.D.H
DRAWN BY: K.K, C.S, N.H
CHECKED BY: S. DEERING

REGISTERED PROFESSIONAL ENGINEER TOM C. FALK No. 69780 Exp. 6/30/12 CIVIL STATE OF CALIFORNIA

PLANS PREPARED BY:
DUDEK
605 Third Street Encinitas, CA 92024
760.942.5147 Fax 760.942.4508

City of Guadalupe
Public Works Dept.
918 Obispo Street, Guadalupe, California 93434
Tel 805-356-3891 Fax 805-343-5512

WASTEWATER TREATMENT PLANT IMPROVEMENT PROJECT

CIVIL DETAILS 2

DWG. C-7
PROJECT NO. 6576
SHT. NO. 18 OF 50

P:\101.Engineering\Guadalupe, City of\6576-Wastewater Treatment Plant\6 Design Data\CAD6576\dwg\As-Builts 8-23-12\6576 SH18 C-7 11/14/2012 11:26 AM

PIPING HORIZONTAL AND VERTICAL CONTROL DATA TABLE				
#	NORTHING	EASTING	ELEVATION	DESCRIPTION
1			DELETED 2	
2	2822.26	8463.36		℄ 4" TEE
3	2825.20	8720.76	59.89 2 RFI #21	℄ 16" TEE
4	2825.20	8461.25	REVISED IN FIELD 2 RFI #21	℄ 16" 90° BEND
5			DELETED 2 RFI #21	
6	2806.94	8461.25	69.48	℄ 16" 22 1/2° BEND
7	2608.25	8461.25	69.48	℄ 16" 45° BEND
8	2580.57	8433.56	69.48	℄ 16" 45° BEND
9			REVISED IN FIELD 2 RFI #35	℄ 16" TEE
10			REVISED IN FIELD 2 RFI #35	℄ 16" 90° BEND
11	2786.23	8459.00	69.40	℄ 14" 90° BEND
12	2608.83	8459.00	69.40	℄ 14" 45° BEND
13	2582.57	8432.73	69.40	℄ 14" 45° BEND
14			REVISED IN FIELD 2 RFI #35	℄ 14" TEE
15			REVISED IN FIELD 2 RFI #35	℄ 14" 90° BEND
16	2832.95	8716.76	62.98	℄ SEWER MANHOLE
17	2832.95	8451.92	63.51	℄ SEWER MANHOLE
18	2832.95	8332.03	63.75	℄ SEWER CLEANOUT
19	2794.01	8451.92	64.81	IE 6" 90° BEND
20	2794.01	8307.75	66.25	IE 6" TEE
21	2840.75	8369.19	62.50	℄ 4" TEE
22	2840.75	8453.54	62.50	℄ 4" TEE
23	2936.86	8453.54	62.50	℄ 4" TEE
24	2789.51	8273.30	65.90	IE 14" TEE
25			REVISED IN FIELD 2 RFI #43	IE 14" 90° BEND
26			DELETED 2 RFI #43	
27	2769.17	8235.47	62.95	IE 14" 90° BEND
28	2535.69	8235.47	62.95	IE 14" 90° BEND
29	2535.69	8298.79	62.95	IE END 14" EFFLUENT LINE

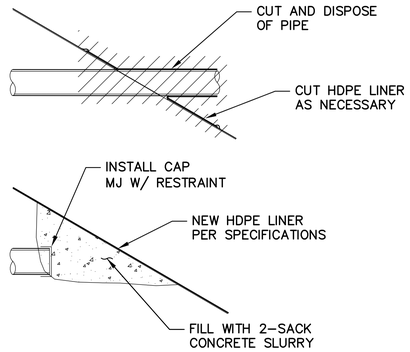

PIPE DEMOLITION DETAIL 1 / C-2
NOT TO SCALE

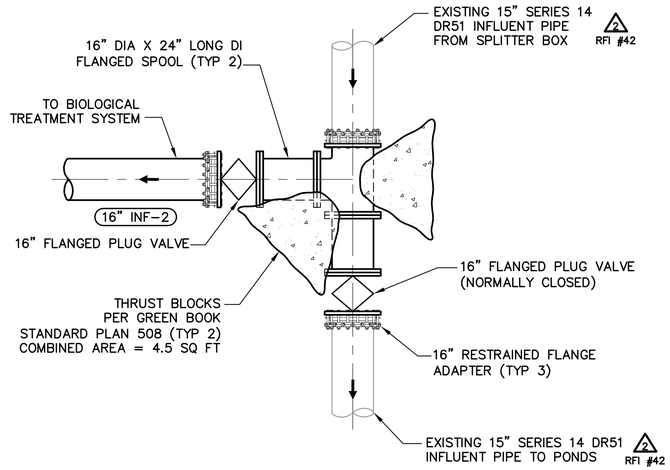

NEW PIPE CONNECTION AT 16" INF 2 / C-4
NOT TO SCALE

NOT USED 2

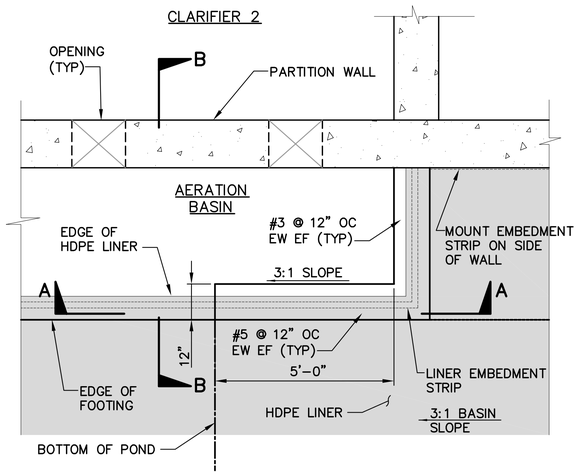

PLAN

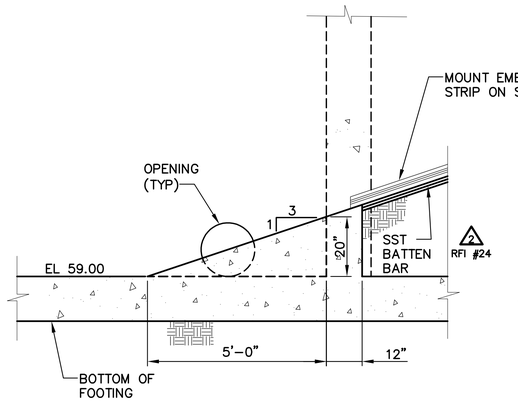

SECTION A-A

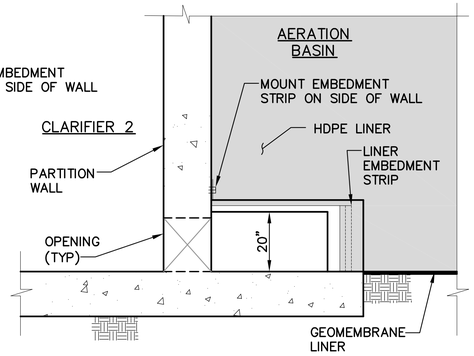

SECTION B-B

1 CLARIFIER CUTOFF WALL DETAIL 4 / C-4
NOT TO SCALE

NOTES:
1. HDPE LINER PER SPECIFICATION SECTION 13700.
2. EMBEDMENT STRIP PER DET 2, DWG C-7.

RECORD DRAWING

THIS RECORD DRAWING IS NOT WARRANTED BUT IS BELIEVED TO REPRESENT CONDITIONS UPON COMPLETION OF CONSTRUCTION WITHIN REASONABLE TOLERANCES, BASED UPON THE INFORMATION FURNISHED TO THE ENGINEER PERTAINING TO CHANGES MADE DURING CONSTRUCTION.

REV	DESCRIPTION	ENGR	DATE	APPD	DATE
2	AS-BUILT	TF/MH	11/2012		
1	ADDENDUM No. 1		8/1/11		

PROGRESS: RECORD DRAWINGS
SUBMITTAL DATE: 11/14/2012
PROJECT MANAGER: T. FALK
DESIGNED BY: K.L.B, A.E.G, M.D.H
DRAWN BY: K.K, C.S, N.H
CHECKED BY: S. DEERING

REGISTERED PROFESSIONAL ENGINEER TIM C. FALK Exp. 6/30/12 CIVIL STATE OF CALIFORNIA

PLANS PREPARED BY:
DUDEK
605 Third Street Encinitas, CA 92024
760.942.5147 Fax 760.942.4508

City of Guadalupe
Public Works Dept.
918 Obispo Street, Guadalupe, California 93434
Tel 805-356-3891 Fax 805-343-5512

WASTEWATER TREATMENT PLANT IMPROVEMENT PROJECT

CONTROL DATA AND CIVIL DETAILS

DWG. C-8
PROJECT NO. 6576
SHT. NO. 19 OF 50

P:\101.Engineering\Guadalupe, City of\6576-Wastewater Treatment Plant\6 Design Data\CAD6576\dwg\As-Builts 8-23-12\6576 SH19 C-8 11/14/2012 11:26 AM

P:\101.Engineering\Guadalupe, City of\6576-Wastewater Treatment Plant\6 Design Data\CAD6576\dwg\As-Builts 8-23-12\structural\10140 S-1 11/14/2012 11:27 AM

STATEMENT OF SPECIAL INSPECTIONS

1. PROVIDE SPECIAL INSPECTIONS IN ACCORDANCE WITH THE APPROPRIATE SECTIONS OF CHAPTER 17 OF THE 2007 CALIFORNIA BUILDING CODE FOR THE ITEMS SHOWN IN THE TABLE BELOW ALONG WITH ANY ADDITIONAL INSPECTIONS AS REQUIRED BY THE OWNER, BUILDING OFFICIAL, ENGINEER OR ARCHITECT AS THEY SEE FIT.

2. IT IS THE RESPONSIBILITY OF THE CONTRACTOR TO INFORM THE SPECIAL INSPECTOR OR INSPECTION AGENCY AT LEAST ONE WORKING DAY PRIOR TO PERFORMING ANY WORK THAT REQUIRES SPECIAL INSPECTION. ALL WORK PERFORMED WITHOUT REQUIRED SPECIAL INSPECTION IS SUBJECT TO REMOVAL.

3. WHERE SPECIAL INSPECTION IS REQUIRED, IT MUST BE PERFORMED BY A CERTIFIED SPECIAL INSPECTOR EMPLOYED BY THE OWNER & APPROVED BY THE BUILDING OFFICIAL. THE SPECIAL INSPECTOR SHALL DEMONSTRATE COMPETENCE FOR THE PARTICULAR TYPE OF CONSTRUCTION OR OPERATION REQUIRING SPECIAL INSPECTION TO THE BUILDING OFFICIAL AND STRUCTURAL ENGINEER, PER CBC SECT 1704.1. THE SPECIAL INSPECTORS MUST BE CERTIFIED BY THE GOVERNING JURISDICTION TO PERFORM THE TYPES OF INSPECTIONS SPECIFIED.

   PROVIDE SPECIAL INSPECTION REPORTS TO THE STRUCTURAL ENGINEER WITHIN 7 DAYS FROM THE DAY OF INSPECTION.

4. THE SPECIAL INSPECTOR SHALL OBSERVE THE WORK ASSIGNED FOR CONFORMANCE WITH THE APPROVED DESIGN DRAWINGS AND SPECIFICATIONS. THE SPECIAL INSPECTOR SHALL FURNISH COPIES OF INSPECTION REPORTS TO THE BUILDING OFFICIAL AND TO R2H ENGINEERING FOR REVIEW WITHIN SEVEN (7) DAYS OF THE WORK. EACH REPORT SHALL BE SIGNED BY A LICENSED ENGINEER OR ARCHITECT. ALL DISCREPANCIES SHALL BE BROUGHT TO THE IMMEDIATE ATTENTION OF THE CONTRACTOR FOR CORRECTION, THEN IF UNCORRECTED TO THE BUILDING OFFICIAL AND R2H ENGINEERING. R2H ENGINEERING SHALL BE NOTIFIED IMMEDIATELY OF ANY TEST WHICH INDICATES NON-COMPLIANCE WITH APPLICABLE CODES OR REQUIREMENTS OF THESE PLANS, PER CBC SECT 1704.1.2.

5. THE SPECIAL INSPECTOR SHALL SUBMIT A FINAL SIGNED REPORT STATING WHETHER THE WORK REQUIRING SPECIAL INSPECTION WAS, TO THE BEST OF THE INSPECTORS KNOWLEDGE, IN CONFORMANCE WITH THE APPROVED PLANS AND SPECIFICATIONS AND THE APPLICABLE WORKMANSHIP PROVISIONS OF THE CODE, TO THE BUILDING OFFICIAL AND TO R2H ENGINEERING, INC, PER CBC SECT 1704.1.2.

6. AN APPLICATION OF OFF-SITE FABRICATION MUST BE SUBMITTED TO THE BUILDING OFFICIAL FOR APPROVAL PRIOR TO FABRICATION.

7. A CERTIFICATE OF COMPLIANCE FOR OFF-SITE FABRICATION MUST BE COMPLETED AND SUBMITTED TO THE BUILDING OFFICIAL FOR APPROVAL PRIOR TO ERECTION OF PREFABRICATED COMPONENTS. SPECIAL INSPECTION REQUIRED PER CBC SECT 1704.2.

8. SPECIAL INSPECTION OF SHOP FABRICATION AND SHOP WELDING IS NOT REQUIRED FOR CERTIFIED FABRICATOR AS REQUIRED BY THE STRUCTURAL STEEL SECTION OF THE GENERAL STRUCTURAL NOTES.

9. THE CONSTRUCTION INSPECTIONS LISTED ARE IN ADDITION TO THE CALLED INSPECTIONS REQUIRED BY SECTION 109 OF THE CALIFORNIA BUILDING CODE. SPECIAL INSPECTION IS NOT A SUBSTITUTE FOR INSPECTION BY A CITY INSPECTOR. SPECIALLY INSPECTED WORK WHICH IS INSTALLED OR COVERED WITHOUT APPROVAL OF THE CITY INSPECTOR IS SUBJECT TO REMOVAL OR EXPOSURE.

10. SPECIAL INSPECTION (INSP) AND MATERIAL TESTING (TEST) MATRIX:

SPECIAL INSPECTOR ______________________
PHONE NUMBER: ___________________________

MATERIAL	TASK	FREQUENCY: CONTINUOUS	FREQUENCY: PERIODIC	SPECIAL INSPECTOR APPROVED (INITIAL & DATE)
SOIL	VERIFY MATERIALS BELOW FOOTINGS ARE ADEQUATE TO ACHIEVE THE DESIGN BEARING CAPACITY	–	TEST	
	VERIFY EXCAVATIONS ARE EXTENDED TO PROPER DEPTH AND HAVE REACHED PROPER MATERIAL	–	INSP	
	PERFORM CLASSIFICATION AND TESTING OF CONTROLLED FILL MATERIALS	–	TEST	
	VERIFY PROPER MATERIALS, DENSITIES AND LIFT THICKNESSES DURING PLACEMENT AND COMPACTION OF CONTROLLED FILL	INSP	–	
	PRIOR TO PLACEMENT OF CONTROLLED FILL, OBSERVE SUB-GRADE AND VERIFY THAT SITE HAS BEEN PREPARED PROPERLY	–	INSP	
CAST-IN-PLACE AND SITE PRE-CAST CONCRETE	REINFORCING STEEL AND PLACEMENT	–	INSP	
	INSPECT FORMWORK FOR SHAPE, LOCATION AND DIMENSIONS OF THE CONCRETE MEMBER BEING FORMED	–	INSP	
	BOLTS TO BE INSTALLED IN CONCRETE PRIOR TO AND DURING PLACEMENT	INSP	–	
	VERIFY USE OF REQUIRED DESIGN MIX	–	INSP	
	AT THE TIME FRESH CONCRETE IS SAMPLED TO FABRICATE SPECIMENS FOR STRENGTH TESTS, PERFORM SLUMP AND AIR CONTENTS TESTS, AND DETERMINE THE TEMPERATURE OF THE CONCRETE	TEST	–	
	CONCRETE AND/OR SHOTCRETE PLACEMENT FOR PROPER APPLICATION TECHNIQUES	INSP	–	
	INSPECTION FOR MAINTENANCE OF SPECIFIED CURING TEMPERATURE AND TECHNIQUES	–	INSP	
POST INSTALLED ANCHORS IN CONCRETE OR MASONRY	VERIFY MATERIALS AND INSTALLATION OF EPOXY, DRILLED, AND/OR EXPANSION ANCHORS PER THE APPROPRIATE ICC REPORTS	INSP	–	
STRUCTURAL STEEL AND STEEL DECK	VERIFICATION OF HIGH STRENGTH BOLTS, NUTS, AND WASHERS: -IDENTIFICATION MARKINGS TO CONFORM TO ASTM STANDARDS SPECIFIED IN THE APPROVED CONSTRUCTION DOCUMENT -MANUFACTURER'S CERTIFICATE OF COMPLIANCE REQUIRED	– –	INSP INSP	
	BEARING-TYPE HIGH-STRENGTH BOLTING CONNECTIONS	–	INSP	
	SLIP-CRITICAL HIGH-STRENGTH BOLTING CONNECTIONS	INSP	–	
	FIELD WELDED CONNECTIONS -SINGLE-PASS FILLET WELDS LESS THAN 5/16" -SINGLE-PASS FILLET WELDS GREATER THAN 5/16" -MULTI-PASS FILLET WELDS -COMPLETE AND PARTIAL-PENETRATION GROOVE WELDS -FLOOR AND ROOF DECK WELDS -WELDING OF REINFORCING STEEL -VERIFICATION OF WELDABILITY OF REINFORCING STEEL OTHER THAN ASTM A706	– INSP INSP INSP – INSP –	INSP – – – INSP – INSP	
SPECIAL CASES	ARCHITECTURAL, MECHANICAL AND ELECTRICAL COMPONENTS PER CBC 1707.7 AND 1707.8	–	INSP	

STRUCTURAL SHOP DRAWINGS

1. THE CONTRACTOR SHALL SUBMIT SHOP DRAWINGS TO THE ENGINEER FOR THE ITEMS CHECKED BELOW.

2. ALL SHOP DRAWINGS SUBMITTED TO THE ENGINEER FOR REVIEW SHALL BE STAMPED AND SIGNED BY THE CONTRACTOR INDICATING THAT HE HAS FOUND THEM TO BE IN ACCORDANCE WITH THE CONTRACT DOCUMENTS AND THAT PROPER PROVISION HAS BEEN MADE TO ACCOMMODATE ALL ABUTTING WORK. FABRICATION SHALL NOT BEGIN UNTIL THE CONTRACTOR HAS RECEIVED SHOP DRAWINGS THAT HAVE BEEN REVIEWED, STAMPED AND SIGNED BY THE ENGINEER.

3. THE ENGINEER WILL REVIEW THE SHOP DRAWING SUBMITTALS FOR GENERAL CONFORMANCE WITH THE DESIGN CONCEPT OF THE PROJECT AND CONTRACT DOCUMENTS.

4. THE CONTRACTOR IS RESPONSIBLE FOR CONFIRMING AND CORRELATING ALL QUANTITIES AND DIMENSIONS, SELECTING FABRICATION PROCESSES AND TECHNIQUES OF CONSTRUCTION, COORDINATING HIS WORK AND THAT OF OTHER TRADES AND PERFORMING HIS WORK IN A SAFE AND SATISFACTORY MANNER.

5. STRUCTURAL SHOP DRAWING SUBMITTALS REQUIRED:

   - [ ] STEEL JOIST AND GIRDER
   - [ ] PREFABRICATED TRUSSES OR JOISTS
   - [ ] GLU-LAMINATED TIMBER
   - [XX] STRUCTURAL STEEL
   - [XX] MISCELLANEOUS STEEL (WHERE PARTS ARE SHOP WELDED)
   - [ ] FIRE SPRINKLER SYSTEM (WITH WEIGHTS)
   - [ ] STOREFRONT SYSTEMS/SKYLITES
   - [XX] ANCHOR BOLT LAYOUTS
   - [XX] REINFORCING STEEL PLACEMENT DRAWINGS
   - [XX] CONCRETE MIX

STRUCTURAL STEEL

1. MATERIAL AND WORKMANSHIP SHALL CONFORM TO A.I.S.C. SPECIFICATIONS FOR DESIGN, FABRICATION AND ERECTION OF STRUCTURAL STEEL FOR BUILDINGS, LATEST EDITION.

2. STRUCTURAL STEEL SHALL COMPLY WITH THE FOLLOWING A.S.T.M. DESIGNATION:

MEMBER	ASTM DESIGNATION	(SLRS) CONN
STRUCTURAL TUBES	A500-07, GRADE B (Fy = 46 KSI)	
PIPE COLUMNS	A53-07, TYPE E OR S, GRADE B	
'W' ROLLED SHAPES	A992-06a (Fy = 50 KSI)	
COMMON BOLTS	A307-07b	
THREADED ROD	A36-05, U.N.O.	
HIGH STRENGTH BOLTS	A325-07a, U.N.O.	YES
OTHER STRUCTURAL STEEL	A36-05 A-572, GRADE B (Fy=50ksi), WHERE NOTED	YES
ANCHOR BOLTS	F1554-07a	YES

3. PROVIDE FULL BEARING ON UNTHREADED PORTION OF SHANK FOR BOLTS AT ALL STEEL MEMBER CONNECTIONS UNLESS NOTED OTHERWISE.

4. WELDS SHALL BE MADE ONLY BY CERTIFIED WELDERS AS PRESCRIBED IN THE STANDARD CODE FOR WELDING IN BUILDING CONSTRUCTION OF THE AMERICAN WELDING SOCIETY.

5. WELDING ELECTRODES: LOW HYDROGEN E70XX SERIES PER A.W.S. D1-1, UNLESS NOTED OTHERWISE.

6. ALL FIELD WELDING AND HIGH STRENGTH BOLTING SHALL BE UNDER CONTINUOUS SPECIAL INSPECTION. SPECIAL INSPECTION NEED NOT BE CONTINUOUSLY PRESENT DURING WELDING OF THE SINGLE-PASS FILLET WELDS NOT GREATER THAN 5/16" IN SIZE, PROVIDED THE MATERIALS AND QUALIFICATIONS OF WELDING PROCEDURES AND WELDERS ARE VERIFIED PRIOR TO THE START OF WORK; PERIODIC INSPECTIONS ARE MADE OF WORK IN PROGRESS; AND A VISUAL INSPECTION OF ALL WELDS IS MADE PRIOR TO COMPLETION OR PRIOR TO SHIPMENT OF SHOP WELDING.

7. SHOP WELDING MUST BE DONE BY A FABRICATOR APPROVED AND RECOGNIZED BY THE BUILDING OFFICIAL OR WELDING MUST HAVE CONTINUOUS SPECIAL INSPECTION. A RECOGNIZED TESTING LAB IS ONE SUPERVISED BY A STATE REGISTERED ENGINEER. A 'CERTIFICATE OF CONFORMANCE' SHALL BE SUBMITTED TO THE DEPARTMENT OF BUILDING INSPECTION AND THE ENGINEER FOR ALL SHOP WELDED WORK.

8. THE CONTRACTOR SHALL SUBMIT DETAILED SHOP DRAWINGS TO THE ENGINEER FOR REVIEW PRIOR TO FABRICATION. SHOP DRAWINGS SHALL BE SUBMITTED FOR ALL MEMBERS SHOWN ON R2H ENGINEERING, INC. DRAWINGS, INCLUDING SPECIAL FABRICATED STEEL WOOD-TO-WOOD CONNECTORS. REQUIRED SHOP DRAWINGS SHALL SHOW MEMBER LAYOUT, SIZE, LENGTH, BOLT HOLE SIZES AND LOCATIONS, CONNECTION DETAILS, GRADE AND ERECTION PROCEDURES.

9. ALL WELDS USED IN PRIMARY MEMBERS AND CONNECTIONS IN THE SEISMIC LOAD RESISTING SYSTEM (SLRS) SHALL BE MADE WITH A FILLER METAL THAT HAS A MINIMUM CHARPY V-NOTCH TOUGHNESS OF 20 FT-LBS AT MINUS 20° F, AS DETERMINED BY A.W.S. CLASSIFICATION OR MANUFACTURER CERTIFICATION.

10. WHERE "DEMAND CRITICAL" WELDS ARE NOTED ON THE DRAWINGS THE FILLER MATERIAL USED SHALL HAVE A MINIMUM CHARPY V-NOTCH (CVN) TOUGHNESS OF 20 FT-LBS AT MINUS 20° F, AND A (CVN) TOUGHNESS OF 40 FT-LBS AT 70°.

11. THE CONTRACTOR MUST PREPARE AND SUBMIT FOR REVIEW A QUALITY ASSURANCE PLAN FOR THE CONSTRUCTION OF THE SEISMIC LOAD RESISTING SYSTEM (SLRS) OF THE BUILDING. THIS SHALL BE PREPARED IN COMPLIANCE WITH AISC 341-05, APPENDIX Q.

APPROVED EPOXY ANCHORING SYSTEMS

1. HILTI 'HIT-RE 500-SD' INSTALLED PER I.C.C. ESR-2322

2. SIMPSON 'SET-XP' INSTALLED PER I.C.C. ESR-2508

3. ALL EPOXY ANCHOR INSTALLATIONS SHALL COMPLY WITH THE SPECIFIED I.C.C. REPORT AND THE MANUFACTURERS RECOMMENDATIONS.

4. ALL EPOXY ANCHOR INSTALLATIONS REQUIRE SPECIAL INSPECTION.

5. ANY ALTERNATIVE TO THE ABOVE ANCHORING SYSTEMS SHALL HAVE A CURRENT I.C.C. REPORT AND BE SUBMITTED TO THE GOVERNING JURISDICTION AND THE ENGINEER OF RECORD PRIOR TO ANY INSTALLATION.

REINFORCING STEEL

1. REINFORCING STEEL - A.S.T.M. A-615-07 WITH GRADES AS LISTED BELOW:

MATERIAL	SIZE	GRADE
CONCRETE	ALL SIZES	60
MASONRY	ALL SIZES	60

2. ALL WELDED REINFORCING BARS SHALL BE A.S.T.M. A-706-06. USE LOW HYDROGEN ELECTRODES AS FOLLOWS:

WELDED MEMBERS	ELECTRODE
REBAR TO REBAR	E80XX
REBAR TO A36 BASE METAL	E70XX

3. UNLESS NOTED OTHERWISE, MINIMUM PROTECTIVE COVER AS FOLLOWS:

CONDITION	CLEAR DISTANCE
ON EARTH SIDE - PLACED AGAINST EARTH	3"
ON EARTH SIDE WHEN FORMED	2"
STEEL IN SLAB ON GRADE	℄ SLAB

4. CONCRETE BAR SPLICE LAPS SHALL BE AS FOLLOWS:

LOCATION	F'c (PSI)	BAR TYPE (1)	BAR SIZE (2) #3	#4	#5	#6	#7	#8	#9
FOUNDATIONS (3b)	4,000	TOP	18	20	24	30	42	48	60
		OTHER	18	18	20	24	34	38	46
WALLS : (3b) (BELOW GRADE OR WATER RETAINING STRUCTURE)	4,000	TOP	18	20	24	30	42	48	60
		OTHER	18	18	20	24	34	38	46
SLAB-ON-GRADE (3c)	4,000	TYPICAL	18	18	20	24	38	48	58

NOTES:
(1) TOP BARS ARE HORIZ BARS WITH MORE THAN 12 INCHES OF CONCRETE CAST BELOW THE BARS.
(2) LENGTHS ARE IN INCHES
(3a) NOT USED.
(3b) BAR SPACING SHALL BE GREATER THAN 4 INCHES PLUS ONE BAR DIAMETER.
(3c) BAR SPACING SHALL BE GREATER THAN 3 INCHES PLUS ONE BAR DIAMETER.

5. REINFORCING DETAILING, BENDING AND PLACING SHALL BE IN ACCORDANCE WITH THE CONCRETE REINFORCING STEEL INSTITUTE'S MANUAL OF STANDARD PRACTICE, LATEST EDITION AND A.C.I. 315.

5a. FOR REINFORCING AT INTERSECTIONS OF WALLS & FOOTINGS SEE DETAIL 5/S-3

5b. FOR BAR BENDS AND HOOKS SEE DETAIL 4/S-3

5c. FOR REINFORCING STEEL SET IN EPOXY SEE DETAIL 5/S-2

6. ALL REINFORCING STEEL, WELDED WIRE FABRIC, ANCHOR BOLTS, DOWELS AND INSERTS SHALL BE WELL SECURED IN POSITION PRIOR TO AND WHILE PLACING CONCRETE OR GROUT.

7. UNLESS OTHERWISE NOTED OR SHOWN, SPACER TIES SHALL BE #3 TIES AT 72 IN. IN ALL BEAMS AND REINFORCED FOOTINGS.

8. ALL FIELD WELDING SHALL HAVE CONTINUOUS SPECIAL INSPECTION.

REINFORCED CONCRETE

1. UNLESS NOTED OTHERWISE, THE SPECIFIED CONCRETE STRENGTH SHOWN IN THE FOLLOWING TABLE IS THE MINIMUM COMPRESSIVE STRENGTH AT 28 DAYS. THE AGGREGATE SHOWN IS THE MAXIMUM SIZE. THE SLUMP SHOWN IS THE MAXIMUM IN INCHES (REGULAR WEIGHT - 145 PSF).

CONSTRUCTION	STRENGTH (PSI)	AGGREGATE	H_2O/CEMENT RATIO	SLUMP
FOUNDATION, WALLS & SLAB ON GRADE	4,000	3/4"	0.45	4

2. DRY PACK SHALL BE COMPOSED OF 1 PART PORTLAND CEMENT AND NO MORE THAN 3 PARTS SAND.

3. PORTLAND CEMENT SHALL CONFORM TO A.S.T.M. C 150-07 TYPE II. STRUCTURAL CONCRETE AGGREGATE SHALL CONFORM TO A.S.T.M. C 33-07 FOR STANDARD WEIGHT OR C 330-05 FOR LIGHTWEIGHT.

4. UNLESS NOTED OTHERWISE, PERIODIC SPECIAL INSPECTION IS REQUIRED FOR ALL STRUCTURAL CONCRETE.

5. ADMIXTURES MAY BE USED WITH PRIOR APPROVAL OF THE ENGINEER. ADMIXTURES USED TO INCREASE THE WORKABILITY OF THE CONCRETE SHALL NOT BE CONSIDERED TO REDUCE THE SPECIFIED MINIMUM CEMENT CONTENT (CALCIUM CHLORIDE SHALL NOT BE USED). CONCRETE SHALL NOT COME IN CONTACT WITH ALUMINUM.

6. NO CONDUIT PLACED IN A CONCRETE SLAB SHALL HAVE AN OUTSIDE DIAMETER GREATER THAN 1/3 THE THICKNESS OF THE SLAB. NO CONDUIT SHALL BE EMBEDDED IN A SLAB THAT IS LESS THAN 4 IN. THICK. WITH THE EXCEPTION OF LOCAL OFFSETS, MINIMUM CLEAR DISTANCE BETWEEN CONDUITS SHALL BE 6 IN.

7. REFER TO MECHANICAL AND ELECTRICAL DRAWINGS FOR LOCATION OF ALL PIPES, CONDUITS, ETC. NO PIPES OR DUCTS SHALL BE PLACED IN CONCRETE FOOTINGS UNLESS SPECIFICALLY DETAILED IN THE STRUCTURAL PLANS OR AS DIRECTED BY THE ENGINEER.

8. TIE ALL INSERTS, ANCHOR BOLTS OR OTHER EMBEDDED ELEMENTS SECURELY IN PLACE PRIOR TO PLACEMENT OF CONCRETE.

9. REFER TO CIVIL, MECHANICAL, PLUMBING AND ELECTRICAL DRAWINGS FOR ALL MOULDS, GROOVES, REGLETS, ORNAMENTAL CLIPS, PIPES, CONDUITS, INSERTS, ETC. TO BE CAST IN CONCRETE.

10. MECHANICALLY VIBRATE ALL CONCRETE WHEN PLACED.

11. CONCRETE MIXES SHALL COMPLY WITH THE STRUCTURAL AND ARCHITECTURAL REQUIREMENTS OF THE PLANS. MIXES SHALL BE DESIGNED BY A RECOGNIZED TESTING LABORATORY, AND SHALL BE SIGNED AND STAMPED BY A CIVIL OR STRUCTURAL ENGINEER REGISTERED IN THE STATE OF CALIFORNIA. STRENGTH TEST REPORTS SHALL BE SUBMITTED TO THE ENGINEER FOR REVIEW.

GENERAL REQUIREMENTS

1. THE CONTRACTOR SHALL VERIFY ALL DIMENSIONS, ELEVATIONS, AND SITE CONDITIONS BEFORE STARTING WORK AND SHALL NOTIFY THE STRUCTURAL ENGINEER IMMEDIATELY OF ANY DISCREPANCIES. ANY OMISSION OR CONFLICT BETWEEN THE VARIOUS ELEMENTS OF THE WORKING DRAWINGS AND/OR SPECIFICATIONS SHALL BE BROUGHT TO THE ATTENTION OF THE STRUCTURAL ENGINEER BEFORE PROCEEDING WITH ANY WORK SO AFFECTED.

2. NOTES AND DETAILS ON THE DRAWINGS SHALL TAKE PRECEDENCE OVER GENERAL NOTES AND TYPICAL DETAILS ON THIS SHEET IN CASE OF CONFLICT.

3. ALL CONSTRUCTION AND QUALITY OF MATERIALS SHALL CONFORM TO THESE PLANS, PROJECT SPECIFICATIONS, LATEST EDITION OF THE C.B.C., AS ADOPTED BY THE LOCAL GOVERNING AUTHORITIES AND THE STANDARD SPECIFICATIONS FOR PUBLIC WORKS CONSTRUCTION (GREENBOOK).

4. WHERE CONSTRUCTION DETAILS ARE NOT SHOWN OR NOTED FOR ANY PART OF THE WORK, SUCH DETAILS SHALL BE THE SAME AS FOR SIMILAR WORK SHOWN ON THE DRAWINGS. WHERE SUFFICIENTLY SIMILAR WORK IS NOT SHOWN, THE ENGINEER SHALL BE CONSULTED FOR CLARIFICATION.

5. THE CONTRACTOR SHALL TAKE ALL NECESSARY PRECAUTIONS TO LOCATE AND PROTECT ANY UNDERGROUND OR CONCEALED CONDUIT, PLUMBING OR OTHER UTILITIES WHERE NEW WORK IS BEING PERFORMED, PRIOR TO BEGINNING EXCAVATIONS.

6. PIPES, DUCTS, SLEEVES, CHASES, ETC., SHALL NOT BE PLACED IN SLABS, BEAMS OR WALLS UNLESS SPECIFICALLY SHOWN OR NOTED. STRUCTURAL MEMBERS SHALL NOT BE CUT FOR PIPES, DUCTS, ETC., UNLESS NOTED OTHERWISE. THE CONTRACTOR SHALL OBTAIN PRIOR APPROVAL FOR INSTALLATION OF ANY ADDITIONAL PIPES, DUCTS, ETC.

7. FOR ALL MECHANICAL AND ELECTRICAL EQUIPMENT IN EXCESS OF 250 LBS., THE CONTRACTOR SHALL COORDINATE EXACT WEIGHTS AND LOCATIONS WITH STRUCTURAL SUPPORTS. IN THE EVENT THAT THE EQUIPMENT DEVIATES IN WEIGHT OR LOCATION FROM THOSE INDICATED ON THE STRUCTURAL PLANS, THE ENGINEER MUST BE NOTIFIED AND APPROVAL GIVEN PRIOR TO INSTALLATION.

8. THIS STRUCTURE IS DESIGNED AS A STABLE UNIT AFTER ALL COMPONENTS ARE IN PLACE AND PROPERLY CONNECTED. THE CONTRACTOR SHALL BE RESPONSIBLE FOR PROVIDING TEMPORARY BRACING, AS REQUIRED, TO INSURE THE VERTICAL AND LATERAL STABILITY OF THE ENTIRE STRUCTURE OR ANY PORTION THEREOF DURING CONSTRUCTION.

9. NEITHER THE OWNER NOR THE STRUCTURAL ENGINEER WILL ENFORCE SAFETY MEASURES OR REGULATIONS. THE CONTRACTOR SHALL DESIGN, CONSTRUCT AND MAINTAIN ALL SAFETY DEVICES, INCLUDING SHORING AND BRACING AND SHALL BE SOLELY RESPONSIBLE FOR CONFORMING TO ALL LOCAL, STATE AND FEDERAL SAFETY AND HEALTH STANDARDS, LAWS AND REGULATIONS.

10. ANY OPTIONS OR SUBSTITUTIONS ARE FOR THE CONTRACTOR'S CONVENIENCE. NO STRUCTURAL CHANGES OR SUBSTITUTIONS SHALL BE MADE IN THE FIELD FROM THE APPROVED CONSTRUCTION DOCUMENTS UNLESS WRITTEN APPROVAL OF SUCH CHANGES OR SUBSTITUTIONS IS OBTAINED FROM THE STRUCTURAL ENGINEER. IF CHANGES ARE MADE WITHOUT WRITTEN APPROVAL, SUCH CHANGES, ALONG WITH ANY ADDITIONAL COSTS, REPAIRS AND COORDINATION WITH OTHER AFFECTED ITEMS SHALL BE THE LEGAL AND FINANCIAL RESPONSIBILITY OF THE CONTRACTOR AND/OR SUBCONTRACTORS INVOLVED.

11. A CIVIL ENGINEER REGISTERED IN THE STATE OF CALIFORNIA SHALL DESIGN AND BE RESPONSIBLE FOR ANY SUPPLEMENTAL FABRICATION DESIGNS OF BUILDING COMPONENTS. IT SHALL BE THE RESPONSIBILITY OF THE COMPONENT FABRICATOR TO COMPLY WITH ALL APPLICABLE REGULATIONS AND TO OBTAIN APPROVAL FROM THE NECESSARY GOVERNING AGENCIES ON SUCH DESIGNS. PRIOR TO CONSTRUCTION AND/OR FABRICATION OF THE ALTERNATE COMPONENTS, THE DESIGN SHALL BE REVIEWED BY THE STRUCTURAL ENGINEER OF RECORD FOR CONFORMANCE WITH THE STRUCTURAL DESIGN AS APPROVED FOR BUILDING PERMIT.

FOUNDATION

1. SOIL TYPE - SEE SOILS REPORT, #11-5918 PREPARED BY GSI SOILS INC., DATED MARCH 8, 2011.

2. FOUNDATION DESIGN AT AERATION PAD IS BASED ON A MODULUS OF SUBGRADE REACTION OF 50 PCI AND A SOIL BEARING VALUE OF 1500 PSF W/ THE BOTTOM OF FOOTINGS TO BE PLACED AT 24 INCHES MINIMUM INTO PROPERLY COMPACTED FILL OR BEDROCK.

3. MAT FOUNDATION DESIGN AT CLARIFIER IS BASED ON A MODULUS OF SUBGRADE REACTION OF 75 PCI AND A SOIL BEARING VALUE OF 2000 PSF WITH A MINIMUM THICKNESS OF 12".

4. THE SOILS REPORT IS TO BE CONSIDERED A PART OF THESE PLANS AND SHALL BE COMPLIED WITH BY THE CONTRACTOR.

5. IN THE EVENT THAT THE FOUNDATION EXCAVATIONS ARE CARRIED TO A DEPTH GREATER THAN THAT REQUIRED, THE ADDITIONAL DEPTH SHALL BE FILLED WITH THE SAME CONCRETE AS THAT USED FOR THAT FOOTING AT NO ADDL EXPENSE TO THE OWNER. NO UNCONTROLLED FILL WILL BE PERMITTED.

6. THE FOOTING EXCAVATIONS SHALL BE KEPT FREE FROM LOOSE MATERIAL AND STANDING WATER.

7. UNLESS NOTED OTHERWISE BY THE SOILS REPORT, ALL REQUIRED BACKFILL SHALL BE COMPACTED TO AT LEAST 90% OF THE MAXIMUM DENSITY OBTAINABLE BY THE A.S.T.M. DESIGNATION D-1557 (LATEST EDITION) METHOD OF COMPACTION.

8. A COMPACTION REPORT MUST BE SUBMITTED TO AND APPROVED BY THE GOVERNING JURISDICTION PRIOR TO PLACEMENT OF ANY CONCRETE ON FILL.

9. UNLESS NOTED OTHERWISE BY THE SOILS REPORT, ALL UTILITY TRENCHES SHALL BE COMPACTED TO A MINIMUM OF 90% RELATIVE DENSITY.

10. FINISH GRADES SHALL BE SLOPED TO DRAIN SURFACE WATER AWAY FROM BUILDINGS.

11. IT IS REQUIRED THAT THE SOILS ENGINEER SUBMIT VERIFICATION TO THE GOVERNING JURISDICTION THAT FOUNDATION CONSTRUCTION IS IN ACCORDANCE WITH THE RECOMMENDATIONS AND CONCLUSIONS OF HIS REPORT.

12. PRIOR TO REQUESTING A BUILDING DEPARTMENT FOUNDATION INSPECTION, THE SOIL ENGINEER SHALL CERITIFY THAT:

   - THE BUILDING PAD WAS PREPARED IN ACCORDANCE WITH THE SOILS REPORT.
   - THE ACTUAL SOIL CONDITIONS ARE CONSISTENT WITH THE ASSUMPTIONS MADE IN THE SOIL REPORT.
   - THE FOUNDATION EXCAVATIONS ARE TO THE PROPER DEPTH OR BEARING STRATA.

12. FOR PIPING UNDER CONTINUOUS FOOTINGS SEE DETAIL 8/S-3

RECORD DRAWING

THIS RECORD DRAWING IS NOT WARRANTED BUT IS BELIEVED TO REPRESENT CONDITIONS UPON COMPLETION OF CONSTRUCTION WITHIN REASONABLE TOLERANCES, BASED UPON THE INFORMATION FURNISHED TO THE ENGINEER PERTAINING TO CHANGES MADE DURING CONSTRUCTION.

R2H ENGINEERING, INC.
CONSULTING STRUCTURAL ENGINEERS
17150 VIA DEL CAMPO, SUITE 306
SAN DIEGO, CA 92127
PHONE (858) 673-8416
FAX (858) 673-8418

REV	DESCRIPTION	ENGR	DATE	APPD	DATE
1	AS-BUILT	TF/MH	11/2012		

PROGRESS: RECORD DRAWINGS
SUBMITTAL DATE: 11/14/2012
PROJECT MANAGER: D. BROWN
DESIGNED BY: O. INIGUEZ, D. BROWN
DRAWN BY: O. INIGUEZ, J. SULLIVAN
CHECKED BY: D. BROWN

REGISTERED PROFESSIONAL ENGINEER, DEVIN A. [illegible], No. [illegible], Exp. [illegible]/30/12, STRUCTURAL, STATE OF CALIFORNIA

PLANS PREPARED BY:
DUDEK
605 Third Street Encinitas, CA 92024
760.942.5147 Fax 760.942.4508

City of Guadalupe
Public Works Dept.
918 Obispo Street, Guadalupe, California 93434
Tel 805-356-3891 Fax 805-343-5512

WASTEWATER TREATMENT PLANT IMPROVEMENT PROJECT

GENERAL STRUCTURAL NOTES

DWG. S-1
PROJECT NO. 6576

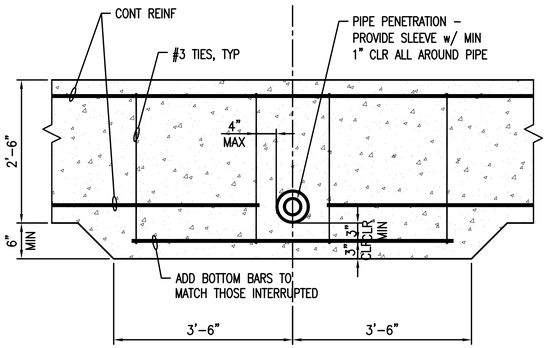

4 S-1A 1" = 1'-0"

1 S-1A 1" = 1'-0"

5 S-1A 1" = 1'-0"

2 S-1A 1" = 1'-0"

6 S-1A 1" = 1'-0"

3 S-1A 1" = 1'-0"

ABBREVIATIONS

A.B.	ANCHOR BOLT	I.F.O.	INTERIOR FACE OF
BD	BOARD	JST	JOIST
BLDG	BUILDING	JNT	JOINT
BLK	BLOCK	K	KIPS (1,000 LB.)
BLKG	BLOCKING	LG	LONG
BM	BEAM	L.L.	LIVE LOAD
B.N.	BOUNDARY NAIL	L.L.H.	LONG LEG HORIZONTAL
BRG	BEARING	L.L.V.	LONG LEG VERTICAL
BTWN	BETWEEN	LT. WT.	LIGHT WEIGHT
C.B.	CARRIAGE BOLT	MAS	MASONRY
C.I.P.	CAST-IN-PLACE	M.B.	MACHINE BOLT
C.J.	CONSTRUCTION JOINT	N.S.	NEAR SIDE
CLG	CEILING	NOM	NOMINAL
C.M.U.	CONCRETE MASONRY UNIT	N.T.S.	NOT TO SCALE
COL	COLUMN	O.C.	ON CENTER
CONC	CONCRETE	O.H.	OPPOSITE HAND
CONN	CONNECTION	OPNG	OPENING
CNTRSNK	COUNTERSINK	P.C.	PRECAST
d	PENNY	PL	PLATE
DBL	DOUBLE	PLY	PLYWOOD
DFL	DOUGLAS FIR/LARCH	PNL	PANEL
DIAG	DIAGONAL	PSF	POUNDS PER SQUARE FOOT
ø	DIAMETER	PSI	POUNDS PER SQUARE INCH
D.L.	DEAD LOAD	P.T.	PRESSURE TREATED
DN	DOWN	R.D.	ROOF DRAIN
DWG	DRAWING	REF	REFERENCE
DWL	DOWEL	REINF	REINFORCED/REINFORCING
EA	EACH	REQD	REQUIRED
E.F.	EACH FACE	RF	ROOF
E.F.O.	EXTERIOR FACE OF	RFTR	RAFTER
EL	ELEVATION	R.S.	ROUGH SAWN
E.N.	EDGE NAIL	SCHED	SCHEDULE
EQ	EQUAL	SECT	SECTION
EQUIP	EQUIPMENT	SHT	SHEET
E.S.	EACH SIDE	SHTG	SHEATHING
E.W.	EACH WAY	SIM	SIMILAR
EXIST	EXISTING	SQ	SQUARE
EXP	EXPANSION	STAGG	STAGGERED
EXT	EXTERIOR	STD	STANDARD
FDN	FOUNDATION	STIFF	STIFFENER
F.F.	FINISH FLOOR	STL	STEEL
F.N.	FIELD NAIL	STRUCT	STRUCTURAL
F.O.	FACE OF	SYM	SYMMETRICAL
FRMG	FRAMING	T&B	TOP AND BOTTOM
F.S.	FAR SIDE	T&G	TONGUE AND GROOVE
FT	FEET	THK	THICK
FTG	FOOTING	THKND	THICKENED
GA	GAUGE	THRU	THROUGH
GALV	GALVANIZED	T.O.	TOP OF
G.I.	GALVANIZED IRON	TYP	TYPICAL
GLB	GLU-LAMINATED BEAM	U.N.O.	UNLESS NOTED OTHERWISE
GRD	GRADE	VERT	VERTICAL
GYP	GYPSUM	W/	WITH
HD	HOLDOWN	W/O	WITHOUT
HDR	HEADER	WD	WOOD
HGR	HANGER	WP	WATERPROOF
HORIZ	HORIZONTAL	WT	WEIGHT
H.S.B.	HIGH STRENGTH BOLT	W.W.F.	WELDED WIRE FABRIC

BUILDING CRITERIA

GOVERNING CODE	2010 CALIFORNIA BUILDING CODE
STATE OF REGISTERED ENGINEER STAMP	CA
OCCUPANCY CATEGORY	II
WIND DESIGN DATA	85 MPH (3 SEC GUST) I = 1.0 EXPOSURE C Internal Pressure Coef = 0.18 DESIGN COMPONENTS AND CLADDING FOR = 20 PSF
SEISMIC DESIGN INFO	Soil Site Class F Ss = 1.313 and S1 = 0.456 Fa = 1 and Fv = 1.544 Sds = 0.875 and Sd1 = 0.469
FLOOD DESIGN DATA	NONE
SOILS DESIGN DATA	ALLOWABLE BEARING PRESSURE = 1500 PSF AT AERATION PAD 2000 PSF AT CLARIFIER 1/3 INCREASE FOR LATERAL MINIMUM FOOTING EMBED DEPTH = 24 in MINIMUM FROST DEPTH (COVER OVER FOOTINGS) = 0 in COEFFICIENT OF FRICTION = 0.35 ALLOWABLE PASSIVE PRESSURE = 250 PSF ACTIVE EQUIVALENT FLUID PRESSURE = 45 PCF
SOILS REPORT	#11-5918 PREPARED BY GSI SOILS INC., DATED MARCH 8, 2011

ALUMINUM

1. ALUMINUM CONSTRUCTION SHALL CONFORM TO THE LATEST EDITION OF THE ALUMINUM CONSTRUCTION MANUAL OF THE ALUMINUM ASSOCIATION.
2. UNLESS OTHERWISE INDICATED, STRUCTURAL ALUMINUM SHALL BE 6061-T6 CONFORMING TO ASTM B-221.
3. WHERE ALUMINUM IS IN CONTACT WITH CONCRETE OR MASONRY SURFACES, CONTACT SURFACES SHALL BE COATED WITH HEAVY ALKALI-RESISTANT BITUMINOUS PAINT.
4. GRATING SHALL BE ALUMINUM UNLESS OTHERWISE NOTED OR OTHERWISE SPECIFIED.
5. UNLESS OTHERWISE INDICATED, ALL GRATING SHALL BE DESIGNED FOR 100 PSF LIVE LOAD AND A LIMITING DEFLECTION OF 1/4".

STAINLESS STEEL

1. STAINLESS STEEL PLATES SHALL CONFORM TO ASTM A276 TYPE 316. STAINLESS STEEL FASTENERS ARE TO BE HILTI KWIK BOLT 3 AND CONFORM TO ICC-ES ERS-1385 OR SIMPSON STRONG BOLT 2 CONFORMING TO ICC-ES ESR-3037, U.N.O.

ALUMINUM GRATING

ALL GRATING SHALL BE SERRATED SURFACE ALUMINUM TYPE 6063-T6.
WITH 1 ¼" x 3/16" BEARING BARS @ 1 3/16" O.C. AND CROSS BARS @ 4" O.C.
LIVE LOAD = 100 PSF DEAD LOAD = 4.1PSF
(McNICHOLS #GAL-125 OR EQUAL).

RECORD DRAWING

THIS RECORD DRAWING IS NOT WARRANTED BUT IS BELIEVED TO REPRESENT CONDITIONS UPON COMPLETION OF CONSTRUCTION WITHIN REASONABLE TOLERANCES, BASED UPON THE INFORMATION FURNISHED TO THE ENGINEER PERTAINING TO CHANGES MADE DURING CONSTRUCTION.

R2H ENGINEERING, INC.
CONSULTING STRUCTURAL ENGINEERS
17150 VIA DEL CAMPO, SUITE 306
SAN DIEGO, CA 92127
PHONE (858) 673-8416
FAX (858) 673-8418

REV	DESCRIPTION	ENGR	DATE	APPD	DATE
1	AS-BUILT	TF/MH	11/2012		

PROGRESS: RECORD DRAWINGS
SUBMITTAL DATE: 11/14/2012
PROJECT MANAGER: D. BROWN
DESIGNED BY: O. INIGUEZ, D. BROWN
DRAWN BY: O. INIGUEZ, J. SULLIVAN
CHECKED BY: D. BROWN

REGISTERED PROFESSIONAL ENGINEER DEVIN A. BROWN No. 6[illegible] Exp. 0[illegible]/12 STRUCTURAL STATE OF CALIFORNIA

PLANS PREPARED BY:
DUDEK
605 Third Street Encinitas, CA 92024
760.942.5147 Fax 760.942.4508

City of Guadalupe
Public Works Dept.
918 Obispo Street, Guadalupe, California 93434
Tel 805-356-3891 Fax 805-343-5512

WASTEWATER TREATMENT PLANT IMPROVEMENT PROJECT

GENERAL STRUCTURAL NOTES & DETAILS

DWG. S-1A
PROJECT NO. 6576
SHT. NO. 21 OF 50

P:\101.Engineering\Guadalupe, City of\6576-Wastewater Treatment Plant\6 Design Data\CAD6576\dwg\As-Builts 8-23-12\structural\10140 S-1A 11/14/2012 11:27 AM

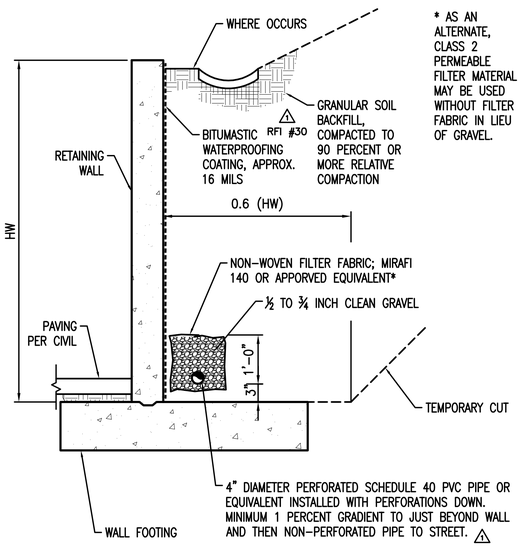

* AS AN ALTERNATE, CLASS 2 PERMEABLE FILTER MATERIAL MAY BE USED WITHOUT FILTER FABRIC IN LIEU OF GRAVEL.

TYPICAL RETAINING WALL DRAIN DETAIL

N.T.S. — 9 / S-2

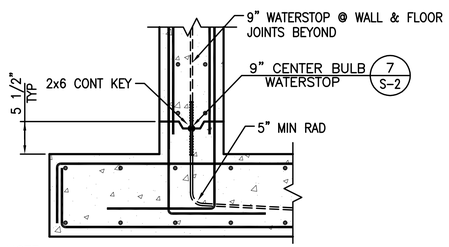

NOTE:
CONTINUE ALL REINFORCING BARS THRU JOINTS.

WATERSTOP AT KEYED WALL JOINTS

1" = 1'-0" — 09/23/09 — PS07-WTRSTP WALL KEY — 6 / S-2

THREADED ROD	
ROD DIAM	EMBED
3/8"	4"
1/2"	4 1/4"
5/8"	5"
3/4"	6 3/4"
7/8"	7 3/4"
1"	9"

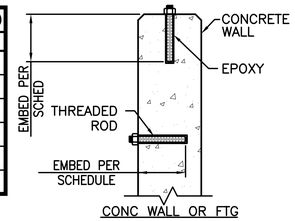

NOTES:

1. THREADED RODS SHALL BE A.S.T.M. A307 (SAE 1018) U.N.O.
2. THREADED RODS SHALL BE PLACED CLEAN & FREE OF OIL, DIRT, RUST OR ANY OTHER DELETERIOUS MATERIALS.
3. INSTALL THREADED ROD ASSEMBLY USING AN APPROVED EPOXY ANCHORING SYSTEM PER THE GENERAL NOTES. MIN EDGE & END DISTANCES AS SPECIFIED BY MANUFACTURER, U.N.O.
4. ROUGHEN AND CLEAN HOLE PRIOR TO PLACING EPOXY.
5. NO CUTTING OF EXISTING REINFORCEMENT SHALL BE ALLOWED IN THE INSTALLATION OF EPOXY ANCHORS UNLESS APPROVED BY THE ENGINEER OF RECORD.
6. SPECIAL INSPECTION OF THREADED ROD INSTALLATION IS REQUIRED.

EPOXY ADHESIVE ANCHORS

1" = 1'-0" — 03/24/04 — PSDE015 — 3 / S-2

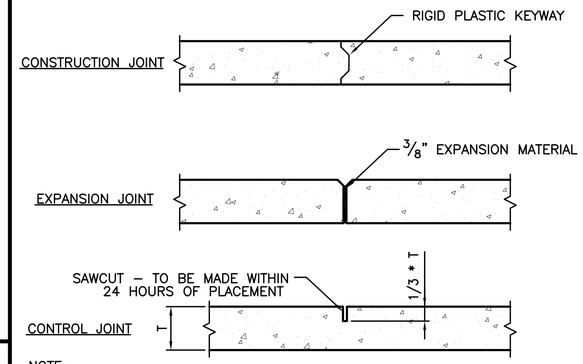

NOTE:
STEEL SHALL PASS THROUGH JOINT WHEN JOINT IS PARALLEL TO PANEL AND 30'-0" OR LESS AWAY FROM ANY PANEL.

CONCRETE SLAB JOINTS

1" = 1'-0" — 1 / S-2

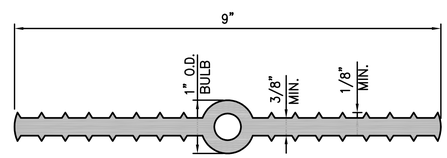

PVC WATERSTOP TYPE #735 BY 'GREENSTREAK, INC.' OR APPROVED EQUAL

9" PVC - CENTER BULB WATERSTOP

N.T.S. — 07/27/2005 — PS23-WATERSTOP 9in — 7 / S-2

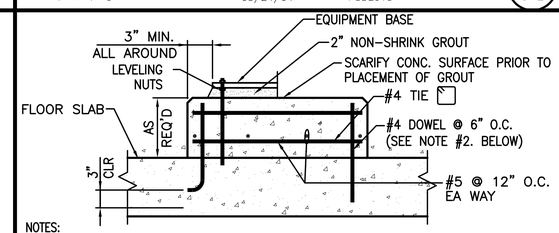

NOTES:

1. EQUIP. PAD DETAIL APPLIES TO EQUIPMENT FURNISHED AND SUPPLIED FOR THIS CONTRACT AND SHALL COMPLY WITH THE DETAIL AND EQUIPMENT MANUFACTURERS RECOMMENDATION AND REQUIREMENTS.
2. IF EQUIP. PAD IS CONSTRUCTED IN CONJUNCTION WITH THE FLOOR SLAB, USE HOOKED DOWELS AND PLACE THE BOLTS PER MANUFACTURERS RECOMMENDATIONS IF EQUIP. PAD IS PLACED AFTER FLOOR SLAB IS COMPLETE, BOLTS AND STRAIGHT DOWELS SHALL BE ANCHORED TO THE SLAB WITH EPOXY GROUT.
3. ANCHOR BOLTS SHALL BE STAINLESS STEEL MATERIAL WITH THE TOP AND BOTTOM 4" THREADED AND SHALL CONFORM WITH THE MANUFACTURERS REQUIREMENTS.
4. USE LEVELING NUTS TO LEVEL EQUIPMENT BASE. DO NOT USE SHIMS.

EQUIPMENT PAD DETAIL

1" = 1'-0" — 4 / S-2

BOLT EMBED	
BOLT DIAM	EMBED
1/2"	4"
5/8"	4"
3/4"	5"
7/8"	6"
1"	7"
1 1/8"	8"

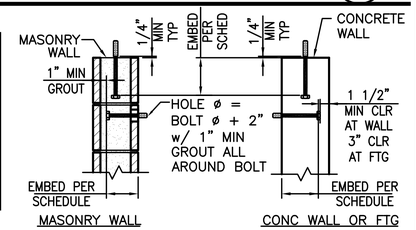

NOTES:

1. FOUNDATION SILL ℄ A.B.'S SHALL HAVE A MIN 7" EMBED.
2. ANCHOR BOLTS LOCATED IN THE TOPS OF COL'S SHALL HAVE A MIN OF 2" EMBEDMENT IN ADDITION TO THAT NOTED IN THE ABOVE SCHEDULE.
3. ALL ANCHOR BOLTS SHALL BE SECURELY TIED IN PLACE PRIOR TO AND WHILE PLACING CONCRETE OR GROUT.
4. A.B.'S SHALL BE A HEADED MACHINE BOLTS.
5. A.S.T.M. A307 QUALITY SHALL BE THE MINIMUM REQD BOLT GRADE.
6. BOLTS SHALL BE PLACED CLEAN & FREE OF OIL, DIRT, RUST, OR ANY OTHER OTHER DELETERIOUS MATERIALS.

EMBEDDED BOLTS

1" = 1'-0" — 05/08/01 — PSDE013 — 2 / S-2

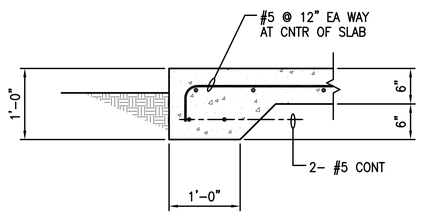

TYPICAL SITE SLAB-ON-GRADE DETAIL

1" = 1'-0" — 10 / S-2

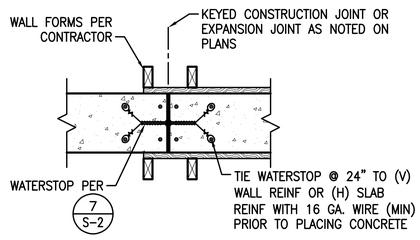

TYP PVC WATERSTOP INSTALLATION

1" = 1'-0" — 05/18/2010 — PS24-WATERSTOP INSTALL — 8 / S-2

REINF STEEL	
BAR SIZE	EMBED
3"	4"
4	4 1/4"
5	5"
6	6 3/4"
7	7 3/4"
8	9"

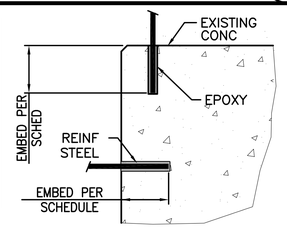

NOTES:

1. REINF STEEL SHALL BE A.S.T.M. A-615-96A GRADE 60 U.N.O.
2. REINF STEEL SHALL BE PLACED CLEAN & FREE OF OIL, DIRT, RUST OR ANY OTHER DELETERIOUS MATERIALS.
3. INSTALL REINF STEEL USING AN APPROVED EPOXY ANCHORING SYSTEM PER THE GENERAL NOTES. MIN EDGE & END DISTANCES AS SPECIFIED BY MANUFACTURER, U.N.O.
4. ROUGHEN AND CLEAN HOLE PRIOR TO PLACING EPOXY.
5. NO CUTTING OF EXISTING REINFORCEMENT SHALL BE ALLOWED IN THE INSTALLATION OF EPOXY ANCHORS UNLESS APPROVED BY THE ENGINEER OF RECORD.
6. SPECIAL INSPECTION OF REINF STEEL INSTALLATION IS REQUIRED.

REINF STEEL SET IN EPOXY

1" = 1'-0" — 03/24/04 — PSDE016 — 5 / S-2

RECORD DRAWING

THIS RECORD DRAWING IS NOT WARRANTED BUT IS BELIEVED TO REPRESENT CONDITIONS UPON COMPLETION OF CONSTRUCTION WITHIN REASONABLE TOLERANCES, BASED UPON THE INFORMATION FURNISHED TO THE ENGINEER PERTAINING TO CHANGES MADE DURING CONSTRUCTION.

R2H ENGINEERING, INC.
CONSULTING STRUCTURAL ENGINEERS
17150 VIA DEL CAMPO, SUITE 306
SAN DIEGO, CA 92127
PHONE (858) 673-8416
FAX (858) 673-8418

REV	DESCRIPTION	ENGR	DATE	APPD	DATE
1	AS-BUILT	TF/MH	11/2012		

PROGRESS: RECORD DRAWINGS
SUBMITTAL DATE: 11/14/2012
PROJECT MANAGER: D. BROWN
DESIGNED BY: O. INIGUEZ, D. BROWN
DRAWN BY: O. INIGUEZ, J. SULLIVAN
CHECKED BY: D. BROWN

REGISTERED PROFESSIONAL ENGINEER — DEVIN A. [illegible] — No. [illegible] — Exp. [illegible]/12 — STRUCTURAL — STATE OF CALIFORNIA

PLANS PREPARED BY:
DUDEK
605 Third Street Encinitas, CA 92024
760.942.5147 Fax 760.942.4508

City of Guadalupe
Public Works Dept.
918 Obispo Street, Guadalupe, California 93434
Tel 805-356-3891 Fax 805-343-5512

WASTEWATER TREATMENT PLANT IMPROVEMENT PROJECT

GENERAL STRUCTURAL DETAILS

DWG. S-2
PROJECT NO. 6576
SHT. NO. 22 OF 50

P:\101.Engineering\Guadalupe, City of\6576-Wastewater Treatment Plant\6 Design Data\CAD6576\dwg\As-Builts 8-23-12\structural\10140 S-2 11/14/2012 11:27 AM

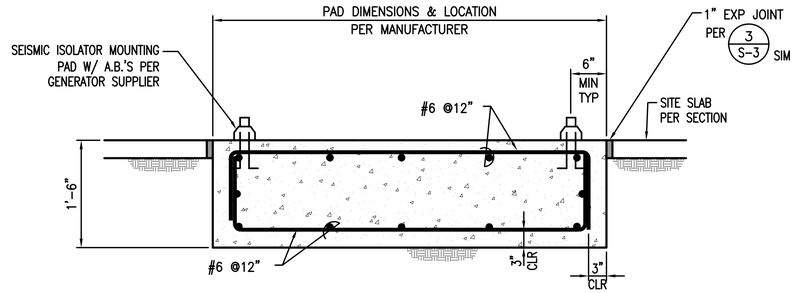

ISOLATED PAD DETAIL

N.T.S.

7 / S-3

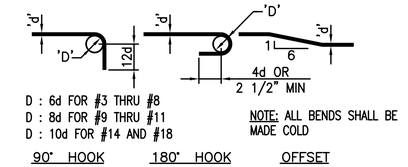

REBAR BENDS & END HOOKS

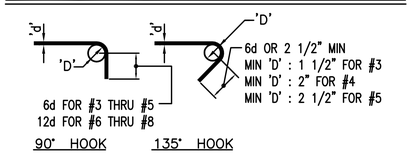

TIE & STIRRUP END HOOKS

1" = 1'-0"

4 / S-3

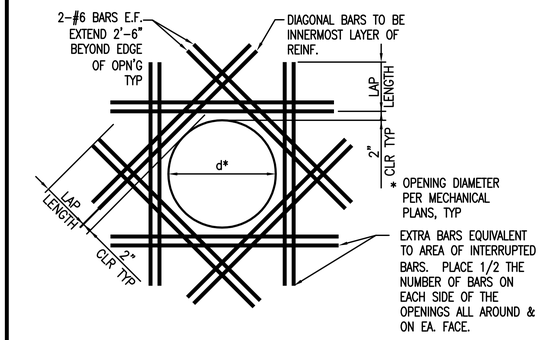

TYP REINF. AT CIRCULAR OPENINGS

3/4" = 1'-0"

1 / S-3

NOTES:

1. WHERE PIPES ARE MORE THAN 4'-0" BELOW BOTTOM OF FOOTING, NO SPECIAL DETAILING IS REQUIRED.
2. PIPES SHALL NOT PASS UNDERNEATH GRADE BEAMS OR COLUMN FOOTINGS.
3. EMBED PIPE IN ABS SLEEVE WITH 1" CLR ALL AROUND OR IN 1" FOAM RUBBER WRAP.
4. MAXIMUM PIPE SIZE IS 10" DIAMETER. LARGER SIZES MUST BE APPROVED BY THE ENGINEER.
5. SEE CIVIL & MECHANICAL DRAWINGS FOR LOCATION & SIZE OF PIPES.
6. FOOTING THICKNESS – NO PIPES SHALL BE PLACED WITHIN THIS HEIGHT.

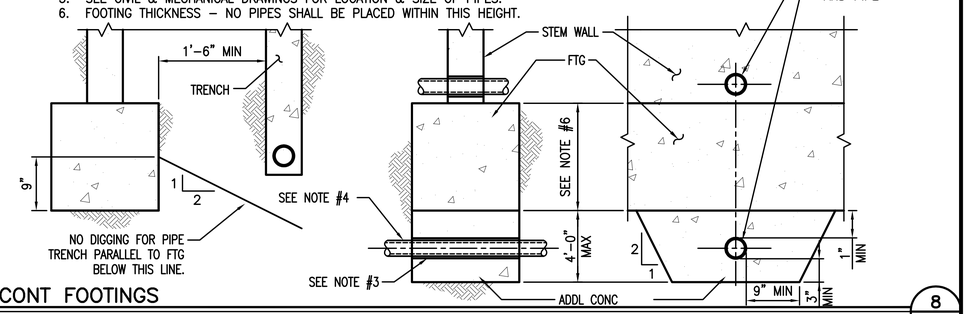

TYP PIPING @ CONT FOOTINGS

1" = 1'-0"

8 / S-3

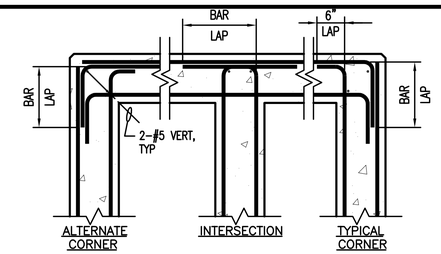

LAP: SEE SHEET S-1.1 REINFORCING STEEL NOTE #4

NOTE: WHERE SINGLE LAYER OF REINFORCING OCCURS, BEND STEEL AS SHOWN FOR OUTSIDE BARS.

REINF AT INTERSECTIONS OF CONC WALLS, FTGS, & BMS

1" = 1'-0"

5 / S-3

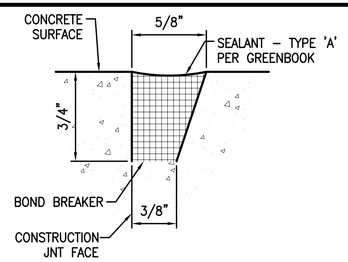

NOTE:

1. WHERE FACE OF JOINT IS TO BE COATED WITH BOND BREAKER AVOID COATING SEALANT GROOVE.
2. ALL FLOOR JOINTS OF HYDRAULIC STRUCTURES (MEMBERS COVERED WITH WATER) SHALL HAVE SEALANT GROOVE

SEALANT GROOVE

N.T.S.

2 / S-3

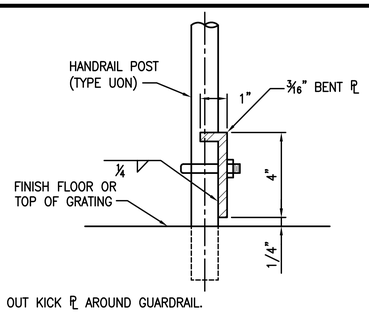

NOTE:

1. COPE OUT KICK PL AROUND GUARDRAIL.
2. MANUFACTURER'S STANDARD 4 IN KICK PLATE MAY BE SUBSTITUTED.
3. PLATE MATERIAL TO MATCH RAIL MATERIAL.

STEEL EDGE

N.T.S.

10 / S-3

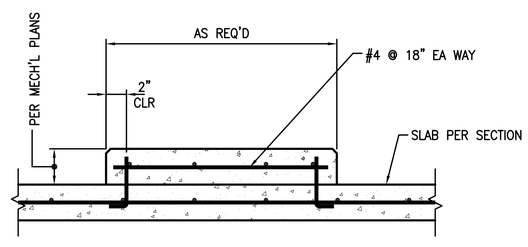

TYPICAL HOUSEKEEPING PAD

1" = 1'-0"

9 / S-3

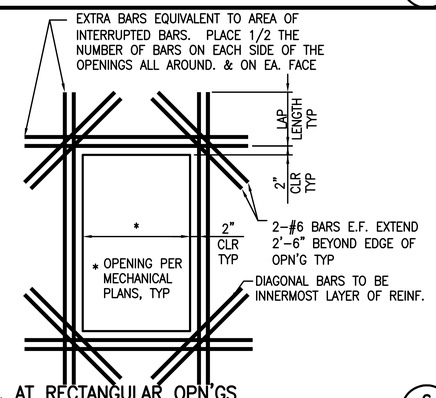

TYP REINF. AT RECTANGULAR OPN'GS

3/4" = 1'-0"

6 / S-3

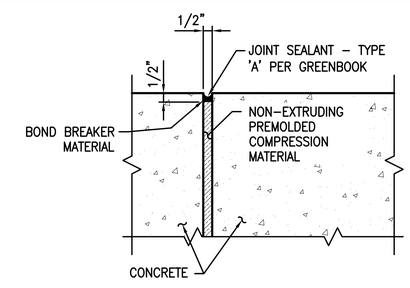

EXPANSION JOINT

3" = 1'-0"

3 / S-3

RECORD DRAWING

THIS RECORD DRAWING IS NOT WARRANTED BUT IS BELIEVED TO REPRESENT CONDITIONS UPON COMPLETION OF CONSTRUCTION WITHIN REASONABLE TOLERANCES, BASED UPON THE INFORMATION FURNISHED TO THE ENGINEER PERTAINING TO CHANGES MADE DURING CONSTRUCTION.

R2H ENGINEERING, INC.
CONSULTING STRUCTURAL ENGINEERS
17150 VIA DEL CAMPO, SUITE 306
SAN DIEGO, CA 92127
PHONE (858) 673-8416
FAX (858) 673-8418

REV	DESCRIPTION	ENGR	DATE	APPD	DATE
1	AS-BUILT	TF/MH	11/2012		

PROGRESS: RECORD DRAWINGS
SUBMITTAL DATE: 11/14/2012
PROJECT MANAGER: D. BROWN
DESIGNED BY: O. INIGUEZ, D. BROWN
DRAWN BY: O. INIGUEZ, J. SULLIVAN
CHECKED BY: D. BROWN

REGISTERED PROFESSIONAL ENGINEER DEVIN A. BROWN No. 5[illegible] Exp. 0[illegible]/12 STRUCTURAL STATE OF CALIFORNIA

PLANS PREPARED BY:
DUDEK
605 Third Street Encinitas, CA 92024
760.942.5147 Fax 760.942.4508

City of Guadalupe
Public Works Dept.
918 Obispo Street, Guadalupe, California 93434
Tel 805-356-3891 Fax 805-343-5512

WASTEWATER TREATMENT PLANT IMPROVEMENT PROJECT

GENERAL STRUCTURAL DETAILS

DWG. S-3
PROJECT NO. 6576
SHT. NO. 23 OF 50

P:\101:Engineering\Guadalupe, City of\6576-Wastewater Treatment Plant\6 Design Data\CAD6576\dwg\As-Builts 8-23-12\structural\10140 S-3 11/14/2012 11:27 AM

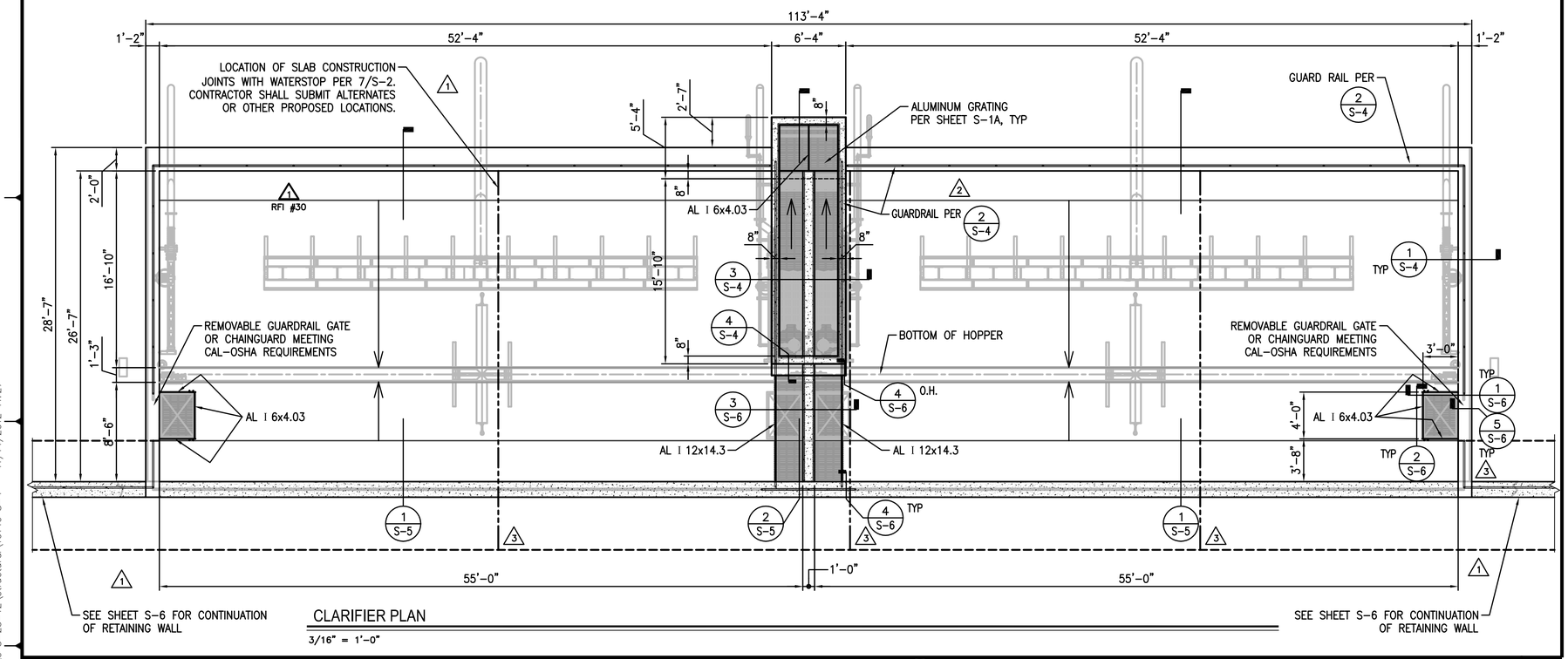

CLARIFIER PLAN

3/16" = 1'-0"

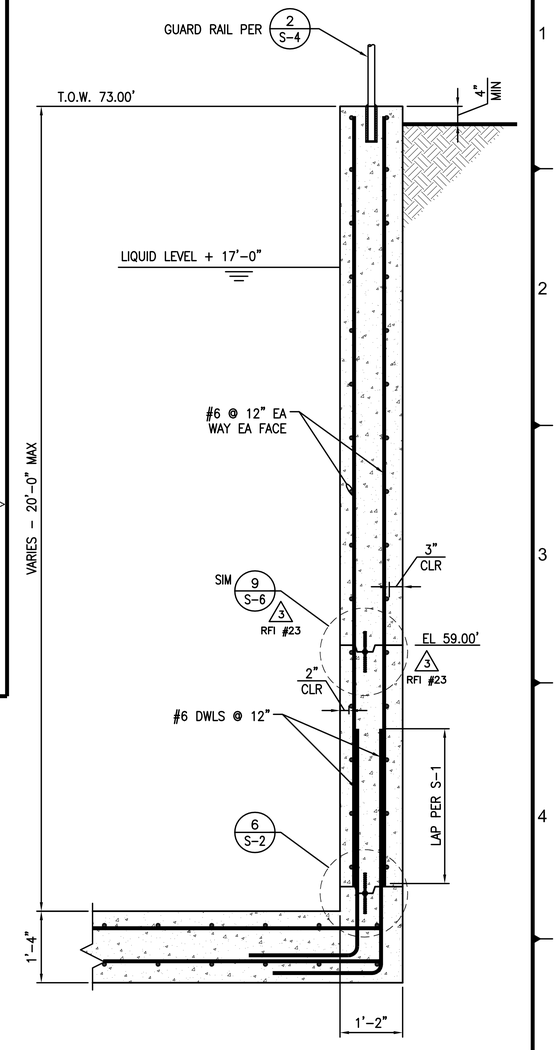

SECTION 1/S-4

3/4" = 1'-0"

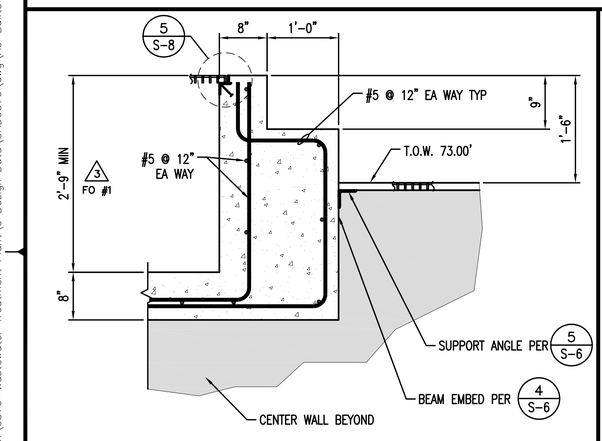

SECTION 4/S-4

1" = 1'-0"

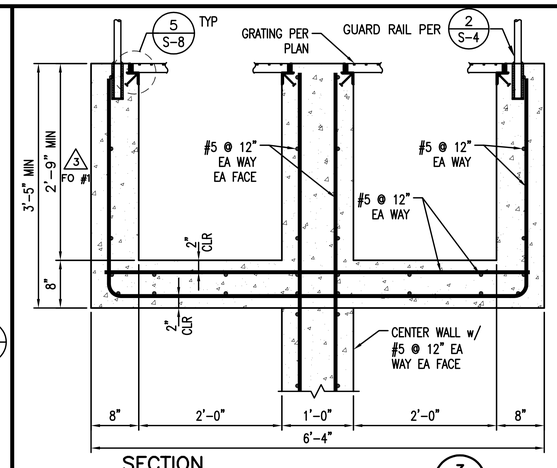

SECTION 3/S-4

1" = 1'-0"

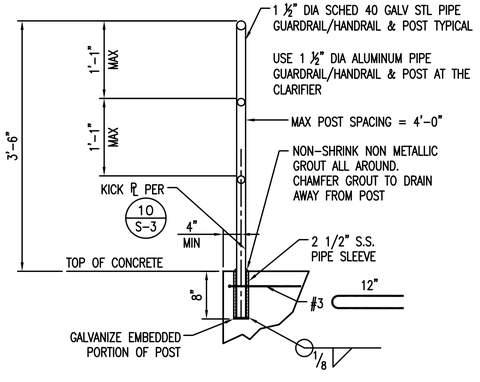

TYPICAL GUARDRAIL DETAIL 2/S-4

1" = 1'-0"

RECORD DRAWING

THIS RECORD DRAWING IS NOT WARRANTED BUT IS BELIEVED TO REPRESENT CONDITIONS UPON COMPLETION OF CONSTRUCTION WITHIN REASONABLE TOLERANCES, BASED UPON THE INFORMATION FURNISHED TO THE ENGINEER PERTAINING TO CHANGES MADE DURING CONSTRUCTION.

R2H ENGINEERING, INC.
CONSULTING STRUCTURAL ENGINEERS
17150 VIA DEL CAMPO, SUITE 306
SAN DIEGO, CA 92127
PHONE (858) 673-8416
FAX (858) 673-8418

REV	DESCRIPTION	ENGR	DATE	APPD	DATE
3	AS-BUILT	TF/MH	11/2012		
2	ADDENDUM #2	DAB	8-8-11		
1	ADDENDUM #1	DAB	8-1-11		

PROGRESS: RECORD DRAWINGS
SUBMITTAL DATE: 11/14/2012
PROJECT MANAGER: D. BROWN
DESIGNED BY: O. INIGUEZ, D. BROWN
DRAWN BY: O. INIGUEZ, J. SULLIVAN
CHECKED BY: D. BROWN

REGISTERED PROFESSIONAL ENGINEER DEVIN A. BROWN No. 6576 Exp. 12/31/12 STRUCTURAL STATE OF CALIFORNIA

PLANS PREPARED BY:
DUDEK
605 Third Street Encinitas, CA 92024
760.942.5147 Fax 760.942.4508

City of Guadalupe
Public Works Dept.
918 Obispo Street, Guadalupe, California 93434
Tel 805-356-3891 Fax 805-343-5512

WASTEWATER TREATMENT PLANT IMPROVEMENT PROJECT

CLARIFIER PLAN

DWG. S-4
PROJECT NO. 6576
SHT. NO. 24 OF 50

P:\101.Engineering\Guadalupe, City of\6576-Wastewater Treatment Plant\6 Design Data\CAD6576\dwg\As-Builts 8-23-12\structural\10140 S-4 11/14/2012 11:27 AM

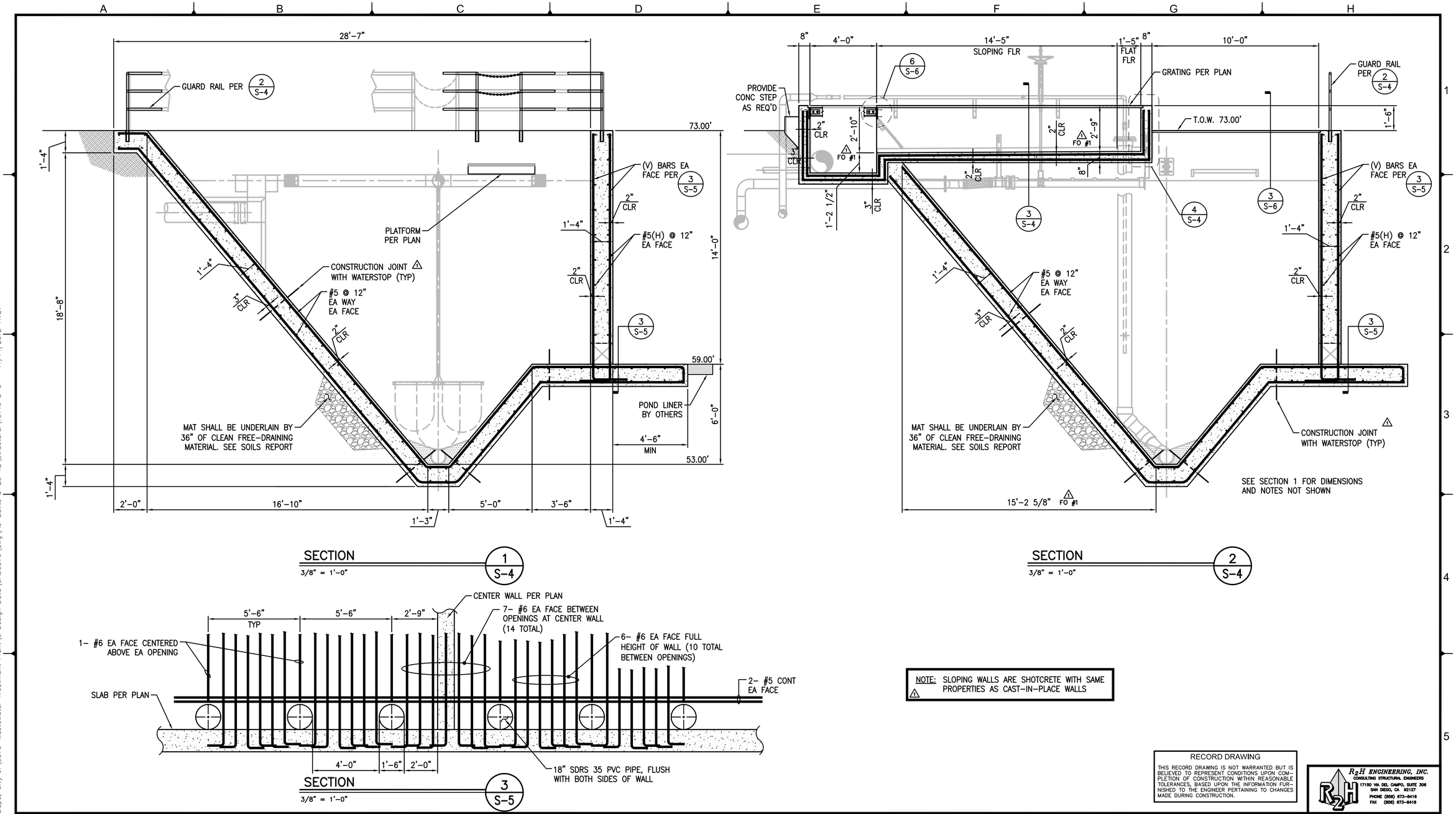

NOTE: SLOPING WALLS ARE SHOTCRETE WITH SAME PROPERTIES AS CAST-IN-PLACE WALLS

RECORD DRAWING

THIS RECORD DRAWING IS NOT WARRANTED BUT IS BELIEVED TO REPRESENT CONDITIONS UPON COMPLETION OF CONSTRUCTION WITHIN REASONABLE TOLERANCES, BASED UPON THE INFORMATION FURNISHED TO THE ENGINEER PERTAINING TO CHANGES MADE DURING CONSTRUCTION.

R2H ENGINEERING, INC.
CONSULTING STRUCTURAL ENGINEERS
17150 VIA DEL CAMPO, SUITE 306
SAN DIEGO, CA 92127
PHONE (858) 673-8416
FAX (858) 673-8418

REV	DESCRIPTION	ENGR	DATE	APPD	DATE
1	AS-BUILT	TF/MH	11/2012		

PROGRESS: RECORD DRAWINGS
SUBMITTAL DATE: 11/14/2012
PROJECT MANAGER: D. BROWN
DESIGNED BY: O. INIGUEZ, D. BROWN
DRAWN BY: O. INIGUEZ, J. SULLIVAN
CHECKED BY: D. BROWN

REGISTERED PROFESSIONAL ENGINEER DEVIN A. BROWN No. 6576 Exp. 06/30/12 STRUCTURAL STATE OF CALIFORNIA

PLANS PREPARED BY:
DUDEK
605 Third Street Encinitas, CA 92024
760.942.5147 Fax 760.942.4508

City of Guadalupe
Public Works Dept.
918 Obispo Street, Guadalupe, California 93434
Tel 805-356-3891 Fax 805-343-5512

WASTEWATER TREATMENT PLANT IMPROVEMENT PROJECT

CLARIFIER SECTIONS

DWG. S-5
PROJECT NO. 6576
SHT. NO. 25 OF 50

P:\101.Engineering\Guadalupe, City of\6576-Wastewater Treatment Plant\6 Design Data\CAD6576\dwg\As-Builts 8-23-12\structural\10140 S-5 11/14/2012 11:27 AM

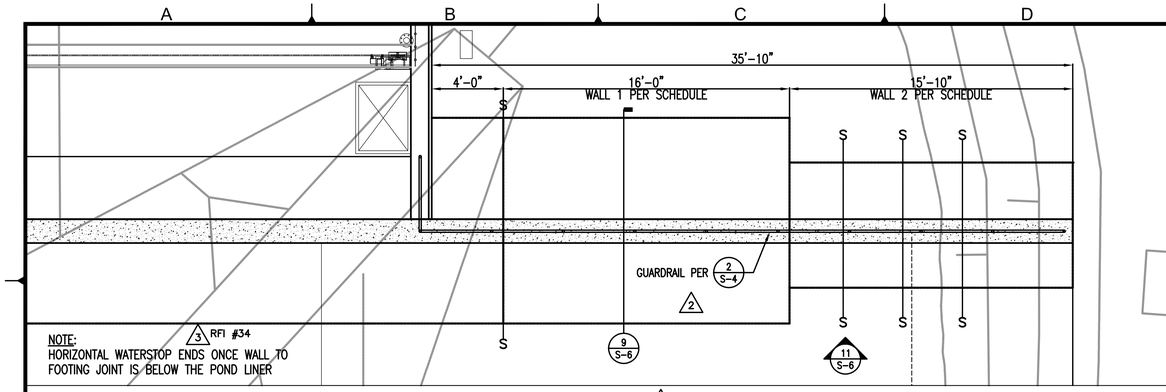

PARTIAL PLAN VIEW - TYPICAL EACH END OF CLARIFIER

1/4" = 1'-0"

7 S-6

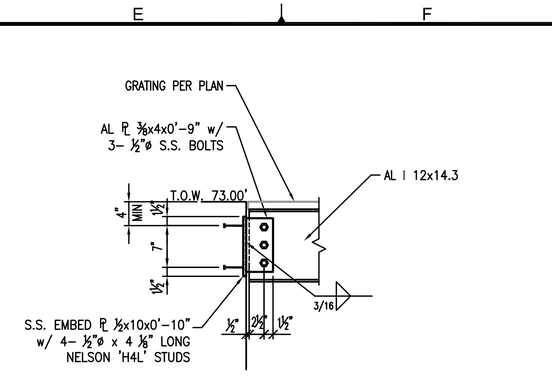

1" = 1'-0"

4 S-4

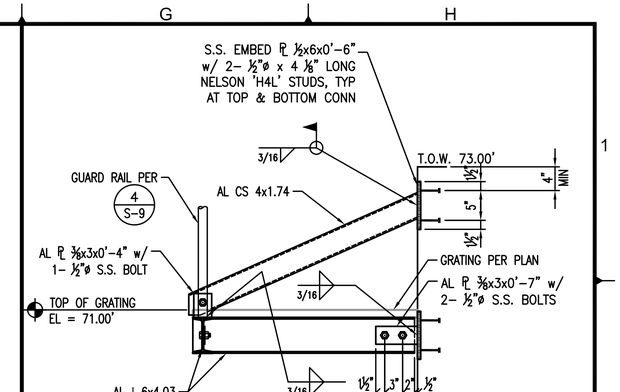

1" = 1'-0"

1 S-4

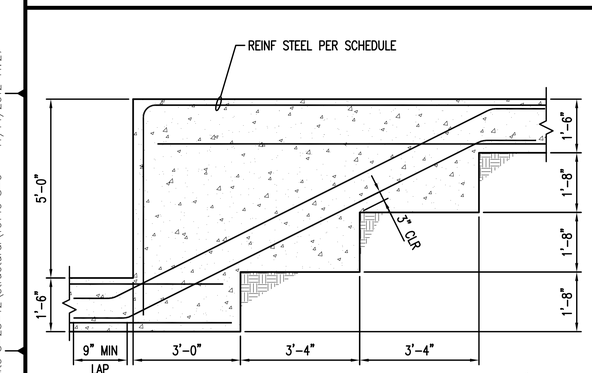

TYPICAL STEPPED FOOTING

1/2" = 1'-0"

11 S-6

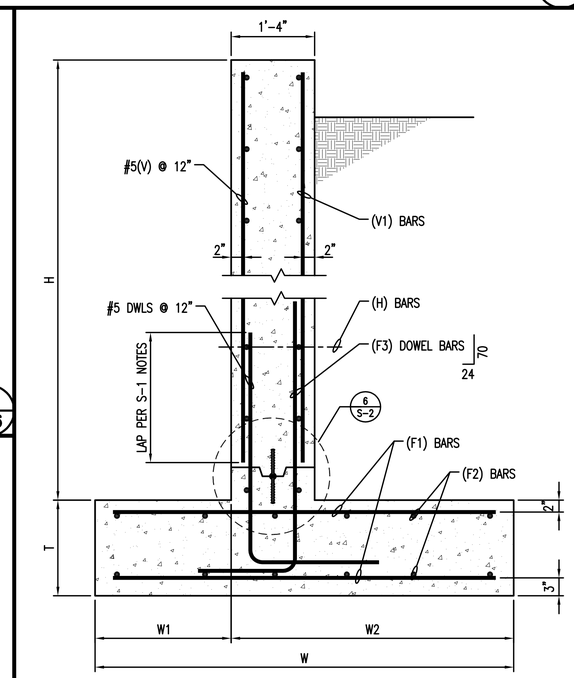

RETAINING WALL SCHEDULE

WALL	W1	W2	W	T	H	(V1) BARS	(H) BARS	(F1) BARS	(F2) BARS	(F3) BARS
WALL 1	4'-6"	7'-0"	11'-6"	1'-6"	12'-0"	#6@9"	#5@12"	#6@9"	#5@12"	#7@9"
WALL 2	2'-6"	4'-6"	7'-0"	1'-6"	7'-0"	#6@12"	#5@12"	#5@12"	#5@12"	#6@12"

9 S-6

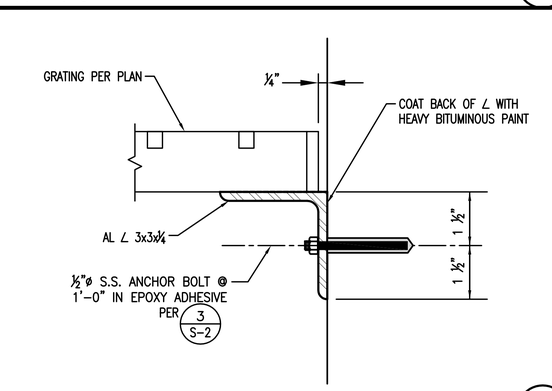

N.T.S.

5 S-4

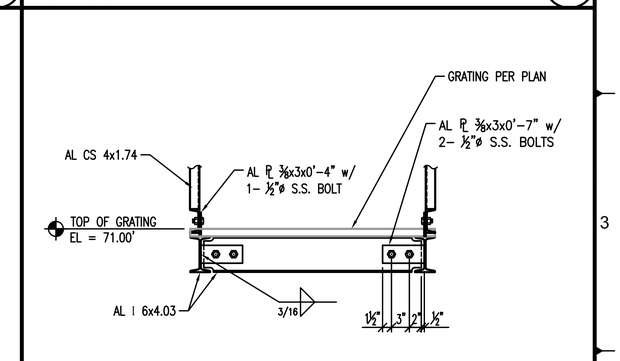

1" = 1'-0"

2 S-4

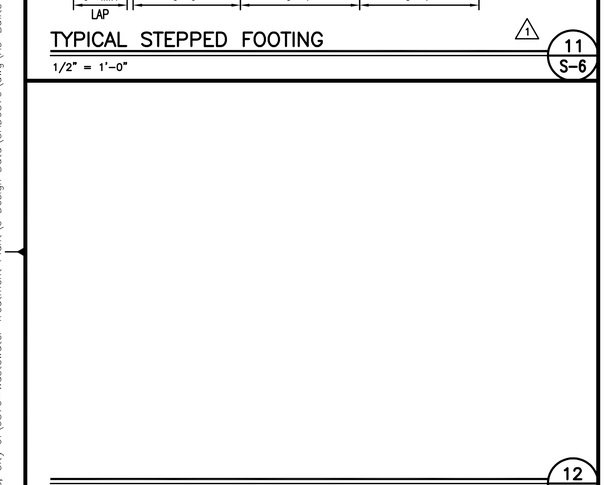

12 S-6

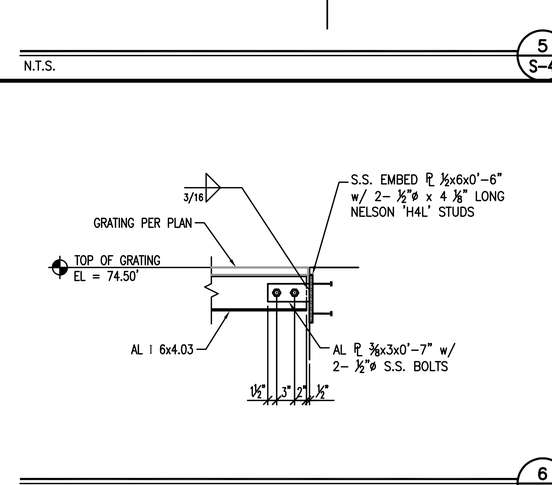

1" = 1'-0"

6 S-6

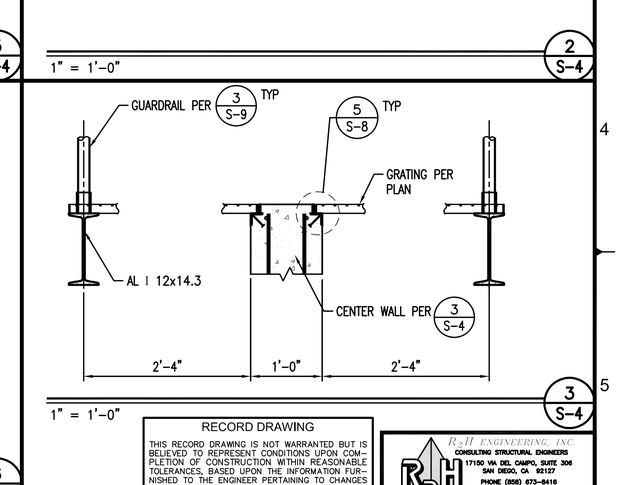

1" = 1'-0"

3 S-4

RECORD DRAWING

THIS RECORD DRAWING IS NOT WARRANTED BUT IS BELIEVED TO REPRESENT CONDITIONS UPON COMPLETION OF CONSTRUCTION WITHIN REASONABLE TOLERANCES, BASED UPON THE INFORMATION FURNISHED TO THE ENGINEER PERTAINING TO CHANGES MADE DURING CONSTRUCTION.

R2H ENGINEERING, INC.
CONSULTING STRUCTURAL ENGINEERS
17150 VIA DEL CAMPO, SUITE 306
SAN DIEGO, CA 92127
PHONE (858) 673-8416
FAX (858) 673-8418

REV	DESCRIPTION	ENGR	DATE	APPD	DATE
3	AS-BUILT	TF/MH	11/2012		
2	ADDENDUM #2	DAB	8-8-11		
1	ADDENDUM #1	DAB	8-1-11		

PROGRESS: RECORD DRAWINGS
SUBMITTAL DATE: 11/14/2012

PROJECT MANAGER: D. BROWN
DESIGNED BY: O. INIGUEZ, D. BROWN
DRAWN BY: O. INIGUEZ, J. SULLIVAN
CHECKED BY: D. BROWN

REGISTERED PROFESSIONAL ENGINEER — DEVIN A. BROWN — No. 54[illegible] — Exp. 06/30/12 — STATE OF CALIFORNIA — STRUCTURAL

PLANS PREPARED BY:

DUDEK
605 Third Street Encinitas, CA 92024
760.942.5147 Fax 760.942.4508

City of Guadalupe
Public Works Dept.

918 Obispo Street, Guadalupe, California 93434
Tel 805-356-3891 Fax 805-343-5512

WASTEWATER TREATMENT PLANT IMPROVEMENT PROJECT

CLARIFIER DETAILS

DWG. S-6
PROJECT NO. 6576
SHT. NO. 26 OF 50

P:\101.Engineering\Guadalupe, City of\6576-Wastewater Treatment Plant\6 Design Data\CAD6576\dwg\As-Builts 8-23-12\structural\10140 S-6 11/14/2012 11:27 AM

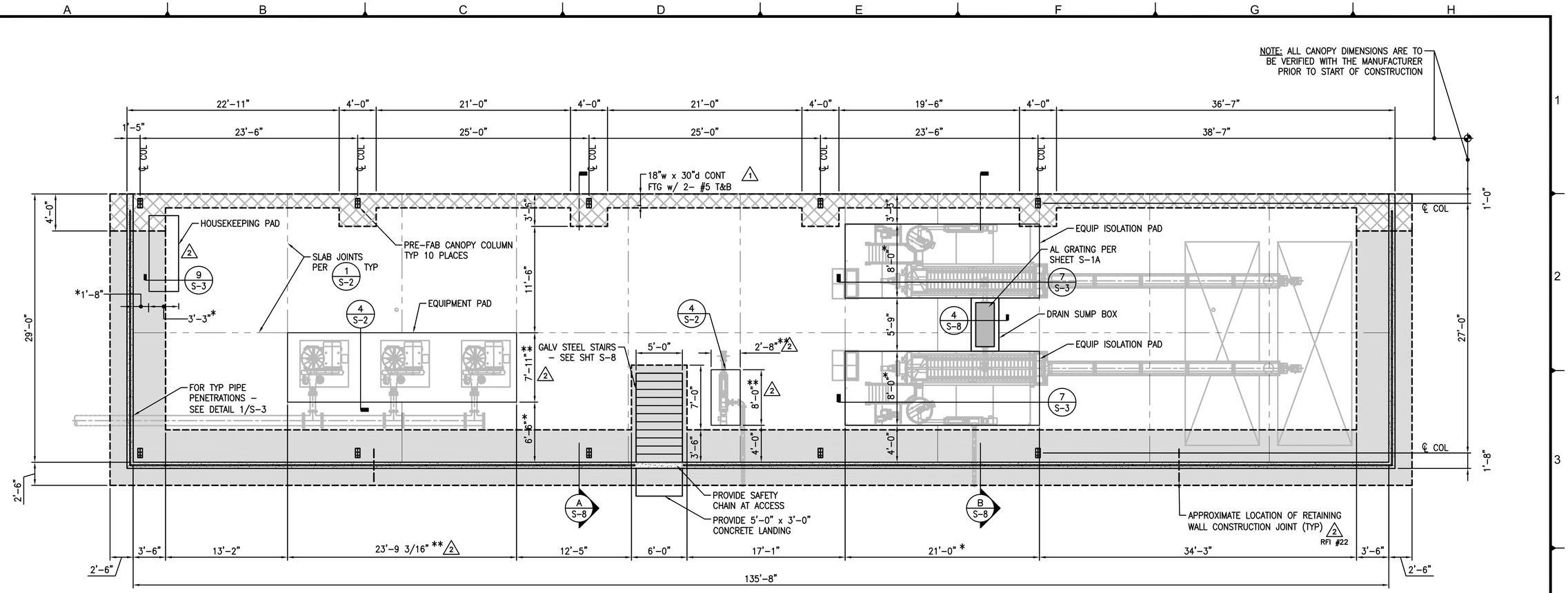

NOTE: ENTIRE SLAB WITH FOOTINGS WAS ONE MONOLITHIC POUR

LEGEND:

- 2'-6" THICK DEEPENED SLAB
- 1'-6" THICK DEEPENED SLAB
- 6'-8" HIGH CONCRETE RETAINING WALL
- EQUIPMENT PAD - COORDINATE SIZE & LOCATION w/ MECH'L
- SLAB JOINTS - SEE DETAIL 1/S-2

NOTE: VERIFY ALL PIPE PENETRATIONS, DRAINS AND EQUIPMENT LOCATIONS WITH CIVIL & MECH'L PLANS. SLOPE SLAB AS REQ'D TO DRAIN.

*PER MANUFACTURER'S DIMENSIONS

**AS-BUILT DIMENSIONS, NOT DRAWN TO SCALE

AERATION PAD PLAN

3/16" = 1'-0"

RECORD DRAWING

THIS RECORD DRAWING IS NOT WARRANTED BUT IS BELIEVED TO REPRESENT CONDITIONS UPON COMPLETION OF CONSTRUCTION WITHIN REASONABLE TOLERANCES, BASED UPON THE INFORMATION FURNISHED TO THE ENGINEER PERTAINING TO CHANGES MADE DURING CONSTRUCTION.

R2H ENGINEERING, INC.
CONSULTING STRUCTURAL ENGINEERS
17150 VIA DEL CAMPO, SUITE 306
SAN DIEGO, CA 92127
PHONE (858) 673-8416
FAX (858) 673-8418

REV	DESCRIPTION	ENGR	DATE	APPD	DATE
2	AS-BUILT	TF/MH	11/2012		
1	ADDENDUM #2	DAB	8-8-11		

PROGRESS: RECORD DRAWINGS
SUBMITTAL DATE: 11/14/2012
PROJECT MANAGER: D. BROWN
DESIGNED BY: O. INIGUEZ, D. BROWN
DRAWN BY: O. INIGUEZ, J. SULLIVAN
CHECKED BY: D. BROWN

REGISTERED PROFESSIONAL ENGINEER DEVIN A. BROWN No. 6[illegible] Exp. 6/30/12 STRUCTURAL STATE OF CALIFORNIA

PLANS PREPARED BY:
DUDEK
605 Third Street Encinitas, CA 92024
760.942.5147 Fax 760.942.4508

City of Guadalupe
Public Works Dept.
918 Obispo Street, Guadalupe, California 93434
Tel 805-356-3891 Fax 805-343-5512

WASTEWATER TREATMENT PLANT IMPROVEMENT PROJECT

AERATION PAD PLAN

DWG. S-7
PROJECT NO. 6576
SHT. NO. 27 OF 50

P:\101.Engineering\Guadalupe, City of\6576-Wastewater Treatment Plant\6 Design Data\CAD\6576\dwg\As-Builts 8-23-12\structural\10140 S-7 11/14/2012 11:27 AM

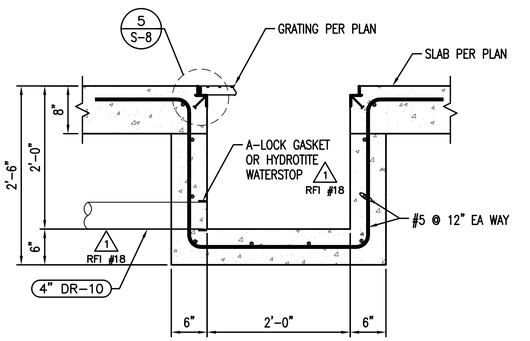

DRAIN SUMP BOX

1" = 1'-0"

4 S-7

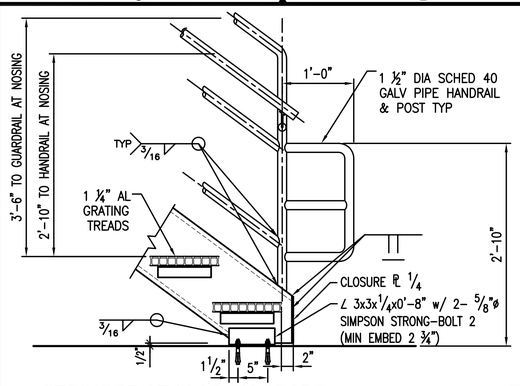

STRINGER AT SLAB ON GRADE

1" = 1'-0"

1 S-8

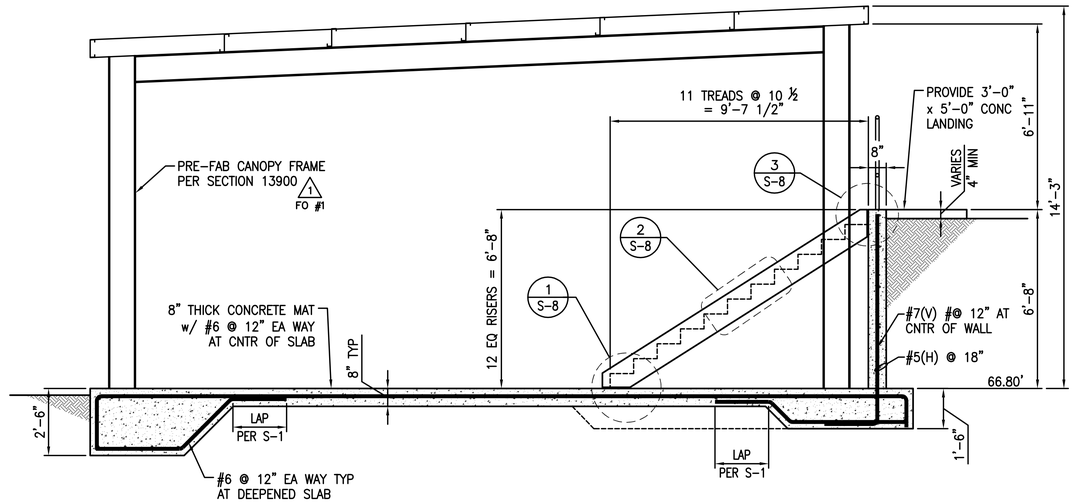

SECTION

3/8" = 1'-0"

A S-7

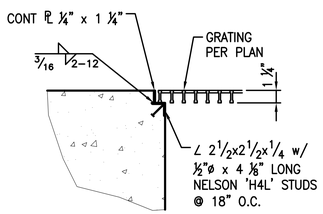

GRATING BEARING DETAIL

1" = 1'-0"

5 S-8

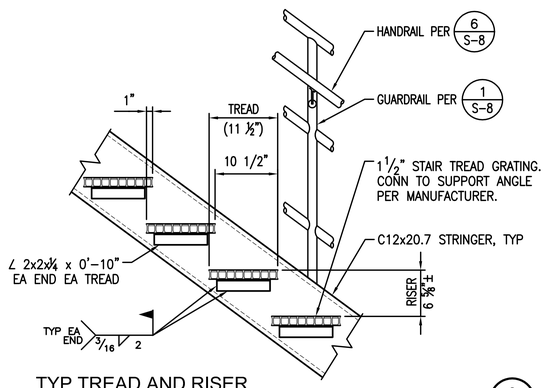

TYP TREAD AND RISER

1" = 1'-0"

2 S-8

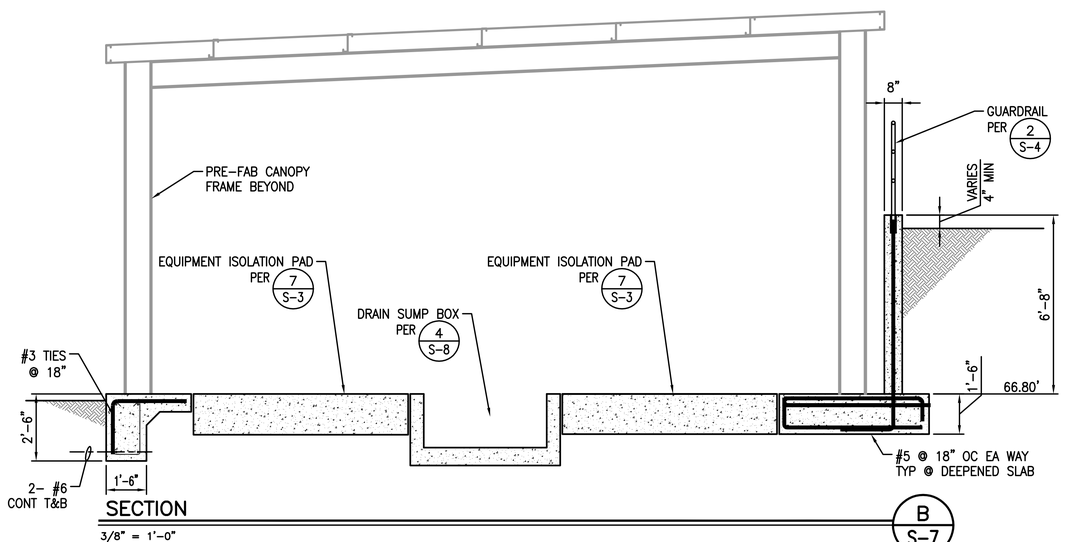

SECTION

3/8" = 1'-0"

B S-7

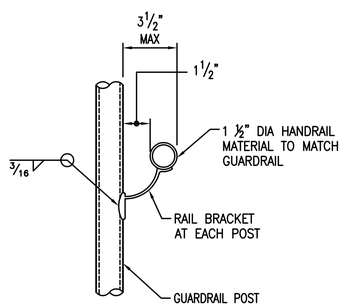

HAND RAIL DETAIL

3" = 1'-0"

6 S-8

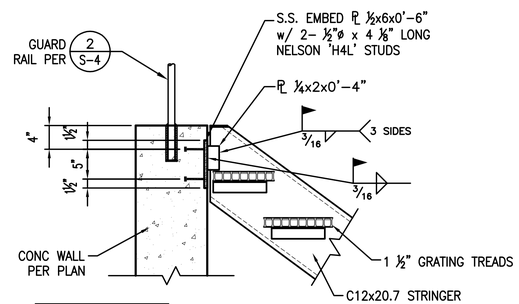

NOTE:
FOR ITEMS NOT SHOWN OR NOTED, SEE DETAIL 2/S-7.

TOP OF STRINGER

1" = 1'-0"

3 S-8

RECORD DRAWING

THIS RECORD DRAWING IS NOT WARRANTED BUT IS BELIEVED TO REPRESENT CONDITIONS UPON COMPLETION OF CONSTRUCTION WITHIN REASONABLE TOLERANCES, BASED UPON THE INFORMATION FURNISHED TO THE ENGINEER PERTAINING TO CHANGES MADE DURING CONSTRUCTION.

R2H ENGINEERING INC.
CONSULTING STRUCTURAL ENGINEERS
17150 VIA DEL CAMPO, SUITE 306
SAN DIEGO, CA 92127
PHONE: (858) 673-8416
FAX (858) 673-8418

REV	DESCRIPTION	ENGR	DATE	APPD	DATE
1	AS-BUILT	TF/MH	11/2012		

PROGRESS: RECORD DRAWINGS
SUBMITTAL DATE: 11/14/2012
PROJECT MANAGER: D. BROWN
DESIGNED BY: O. INIGUEZ, D. BROWN
DRAWN BY: O. INIGUEZ, J. SULLIVAN
CHECKED BY: D. BROWN

REGISTERED PROFESSIONAL ENGINEER
SEVIN A. NAVABI
No. 5844
Exp. 06/30/12
STRUCTURAL
STATE OF CALIFORNIA

PLANS PREPARED BY:
DUDEK
605 Third Street Encinitas, CA 92024
760.942.5147 Fax 760.942.4508

City of Guadalupe
Public Works Dept.
918 Obispo Street, Guadalupe, California 93434
Tel 805-356-3891 Fax 805-343-5512

WASTEWATER TREATMENT PLANT IMPROVEMENT PROJECT

AERATION PAD SECTIONS

DWG. S-8
PROJECT NO. 6576
SHT. NO. 28 OF 50

P:\101.Engineering\Guadalupe, City of\6576-Wastewater Treatment Plant\6 Design Data\CAD\6576\dwg\As-Builts 8-23-12\structural\10140 S-8 11/14/2012 11:27 AM

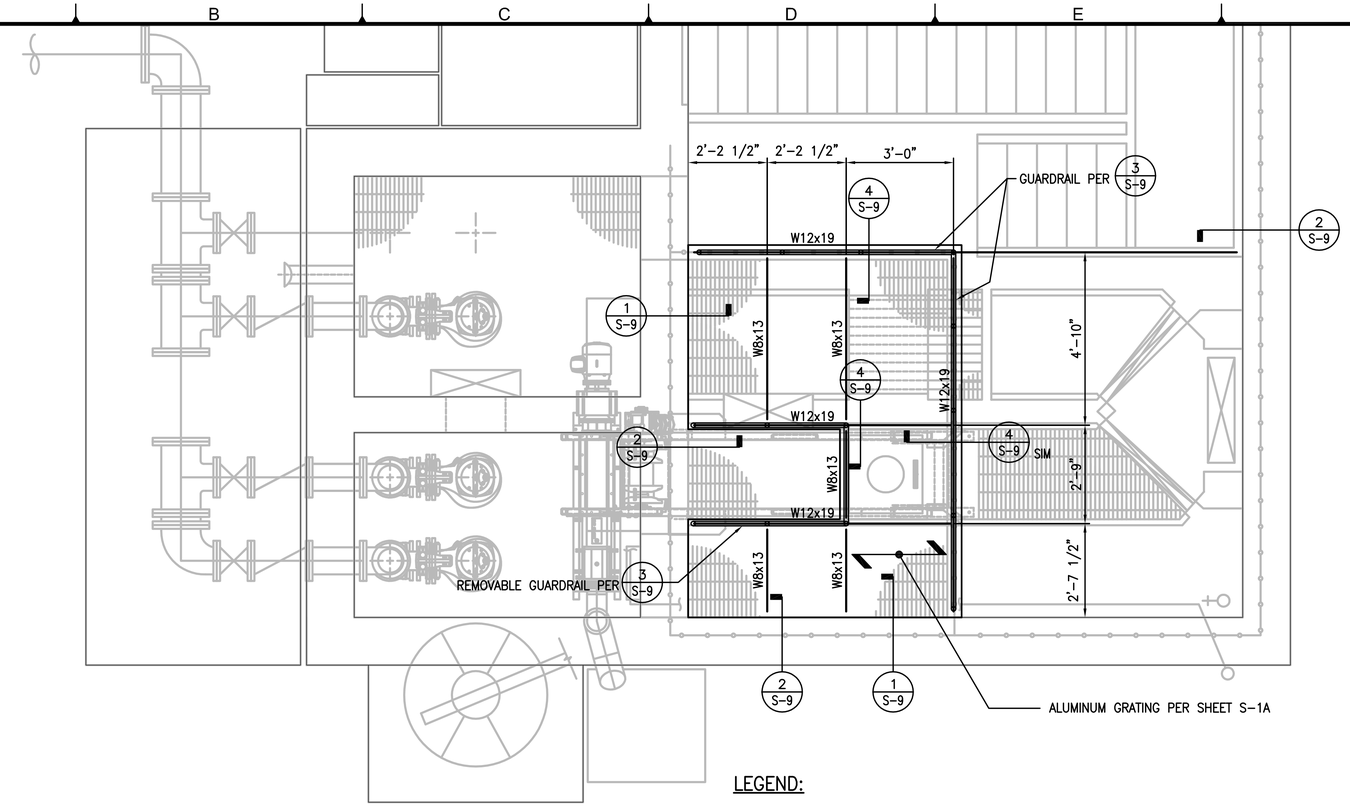

LEGEND:

INDICATES DIRECTION OF GRATING SPAN

HEADWORKS GRATING PLAN

1/2" = 1'-0"

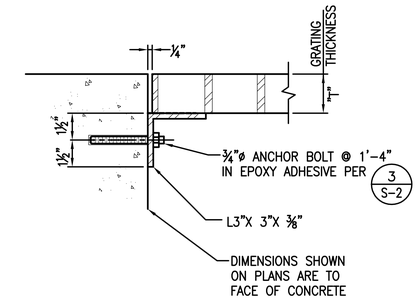

NOTE:
1. CURB ANGLE SHALL BE GALVANIZED STEEL
2. MITRE, WELD & GRIND SMOOTH ANGLES AT ALL CORNERS

SECTION 1 S-9

N.T.S.

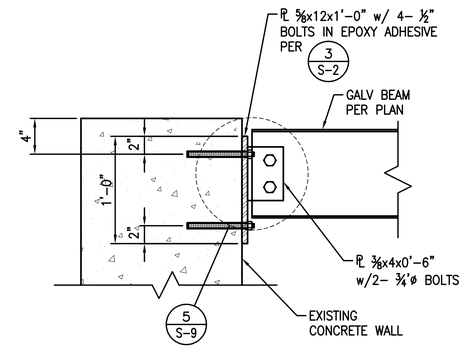

SECTION 2 S-9

1 1/2" = 1'-0"

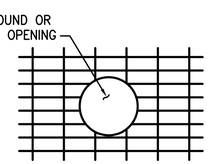

PLAN

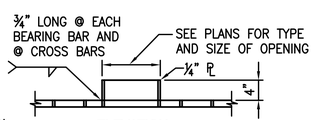

NOTE:
4" PROJECTION AT OPENING IS OPTIONAL

ELEVATION

GRATED OPENING 6 S-9

N.T.S.

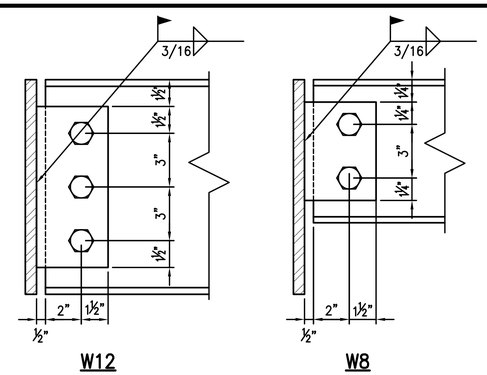

SECTION 5 S-9

3" = 1'-0"

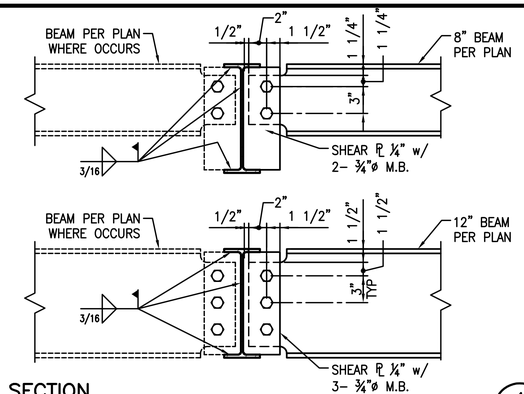

SECTION 4 S-9

1 1/2" = 1'-0"

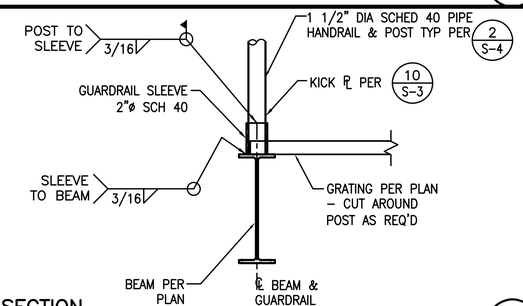

SECTION 3 S-9

1 1/2" = 1'-0"

RECORD DRAWING

THIS RECORD DRAWING IS NOT WARRANTED BUT IS BELIEVED TO REPRESENT CONDITIONS UPON COMPLETION OF CONSTRUCTION WITHIN REASONABLE TOLERANCES, BASED UPON THE INFORMATION FURNISHED TO THE ENGINEER PERTAINING TO CHANGES MADE DURING CONSTRUCTION.

R2H ENGINEERING, INC.
CONSULTING STRUCTURAL ENGINEERS
17150 VIA DEL CAMPO, SUITE 306
SAN DIEGO, CA 92127
PHONE (858) 673-8416
FAX (858) 673-8418

REV	DESCRIPTION	ENGR	DATE	APPD	DATE
1	AS-BUILT	TF/MH	11/2012		

PROGRESS: RECORD DRAWINGS
SUBMITTAL DATE: 11/14/2012

PROJECT MANAGER: D. BROWN
DESIGNED BY: O. INIGUEZ, D. BROWN
DRAWN BY: O. INIGUEZ, J. SULLIVAN
CHECKED BY: D. BROWN

REGISTERED PROFESSIONAL ENGINEER DEVIN A. NOLAN Exp. 6/30/12 STATE OF CALIFORNIA STRUCTURAL

PLANS PREPARED BY:
DUDEK
605 Third Street Encinitas, CA 92024
760.942.5147 Fax 760.942.4508

City of Guadalupe
Public Works Dept.
918 Obispo Street, Guadalupe, California 93434
Tel 805-356-3891 Fax 805-343-5512

WASTEWATER TREATMENT PLANT IMPROVEMENT PROJECT

HEADWORKS PLATFORM FRAMING PLAN

DWG. S-9
PROJECT NO. 6576
SHT. NO. 29 OF 50

P:\101.Engineering\Guadalupe, City of\6576-Wastewater Treatment Plant\6 Design Data\CAD6576\dwg\As-Builts 8-23-12\structural\10140 S-9 11/14/2012 11:27 AM

IMPROVEMENT LEGEND:

1. CONSTRUCT METAL PLATFORM WITH HAND RAILING TO ACCESS SCREEN MOTOR AND CHAIN TENSION DEVICE. SEE STRUCTURAL DRAWINGS.
2. REPLACE EXISTING GRATING AS NECESSARY FOR INSTALLATION OF NEW SCREEN EQUIPMENT. INSTALL GRATING ABOVE MECHANICAL BAR SCREEN AS SHOWN. FURNISH AND INSTALL NEW GRATING SUPPORT MEMBERS AS REQUIRED.
3. CUT (2) 3" DIA HOLES IN EXISTING GRATING PER DTL 6, DWG S-9 TO ACCOMMODATE NEW DRAIN HOSE.
4. ~~REMOVE AND REPLACE VFD FOR P-103 - SEE ELECTRICAL DRAWINGS.~~ NOT IN CONTRACT 1
5. FURNISH AND INSTALL 1.5 CY ROLLING TRASH BIN.
6. CONNECT TO EQUIPMENT DRAIN LINE PER DTL 3, DWG M-11.
7. HOSE BIBB PER DTL 1, DWG M-11.
8. ROUT 2" PLANT WATER PIPE TO CONNECTIONS AT SCREENINGS EQUIPMENT. FURNISH AND INSTALL ALL PIPING, FITTINGS AND SUPPORTS AS NECESSARY.

NOTES:

1. ALL EXISTING ITEMS NOT IDENTIFIED FOR DEMOLITION SHALL BE PROTECTED IN PLACE. CONTRACTOR IS RESPONSIBLE FOR REPAIRING DAMAGE TO ANY EXISTING STRUCTURES OR EQUIPMENT.
2. HEADWORKS AND INFLUENT LIFT STATION SHALL REMAIN IN SERVICE THROUGHOUT CONSTRUCTION. REFER TO SPECIFICATION SECTION 01014 FOR CONSTRUCTION PHASING.
3. 8" EXISTING SEWER FROM GRIT REMOVAL SYSTEM AND ABANDONED DRYING BEDS. CONTRACTOR TO VERIFY.
4. CONTRACTOR TO VERIFY LOCATION OF EXISTING PW LINE IN THIS AREA.

DEMOLITION LEGEND:

1. REMOVE AND DISPOSE OF EXISTING COMMINUTOR. DEMOLISH EXISTING REINFORCED GROUT PAD AT CHANNEL INVERT.
2. ~~REMOVE AND DISPOSE OF EXISTING PUMPS, MOUNTING SYSTEM, GUIDE RAILS AND VERTICAL DISCHARGE PIPING.~~ NOT IN CONTRACT 1
3. ~~REMOVE AND DISPOSE OF EXISTING (8") 90 DEGREE BEND, DUCTILE IRON SPOOL, AND CHECK VALVE.~~ NOT IN CONTRACT 1
4. REMOVE AND DISPOSE OF EXISTING HANDRAIL.
5. DEMOLISH CHANNEL WING WALLS TO MATCH EXISTING CHANNEL WIDTH. REMOVE REBAR A MINIMUM OF 2" BELOW EXISTING WINGWALL FINAL SURFACE. TREAT EXPOSED REBAR WITH CORROSION INHIBITOR. RESTORE CONCRETE SURFACE WITH SP15 SPRAY MORTAR AS MANUFACTURED BY SIKA OR APPROVED EQUAL.
6. REMOVE EXISTING GRATING ON SOUTH SCREENINGS CHANNEL AS NECESSARY TO FIT NEW BAR SCREEN EQUIPMENT.

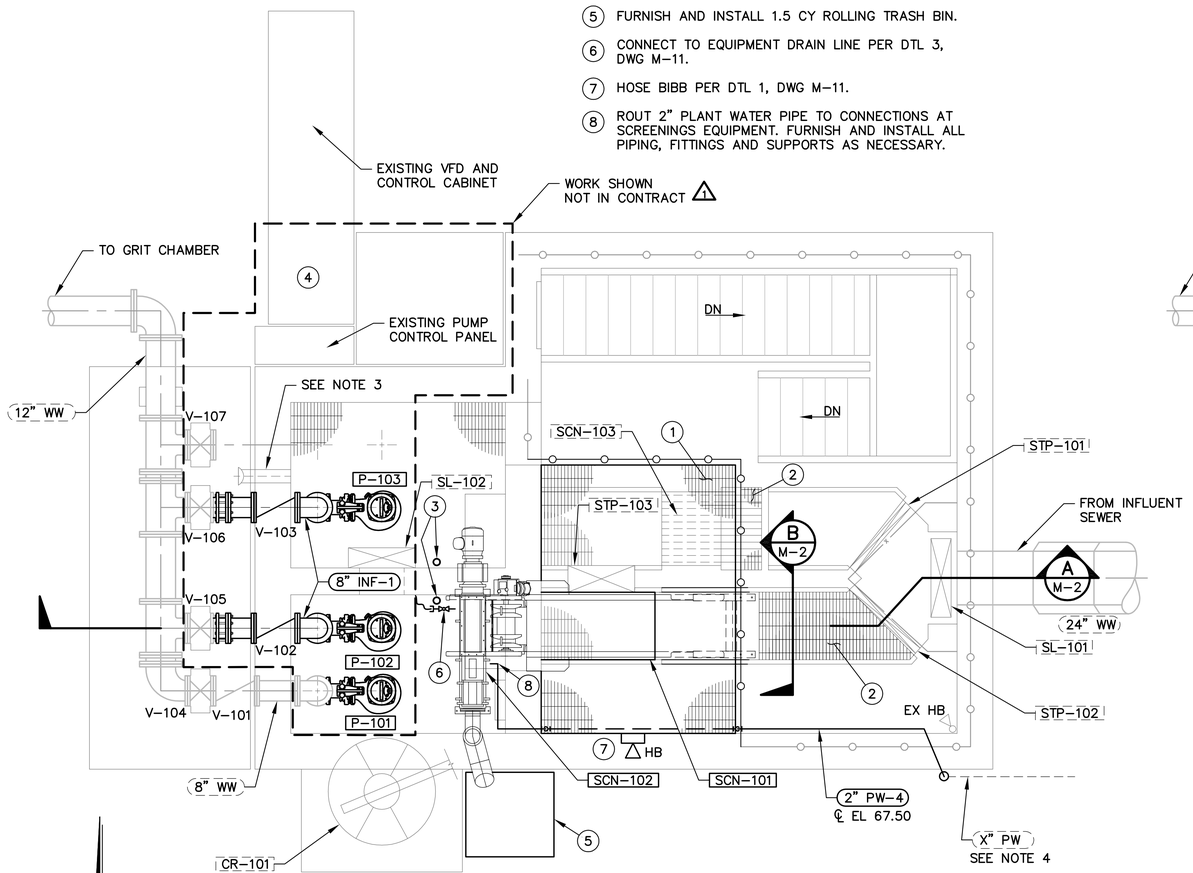

PLAN
SCALE: 3/8"=1'=0"

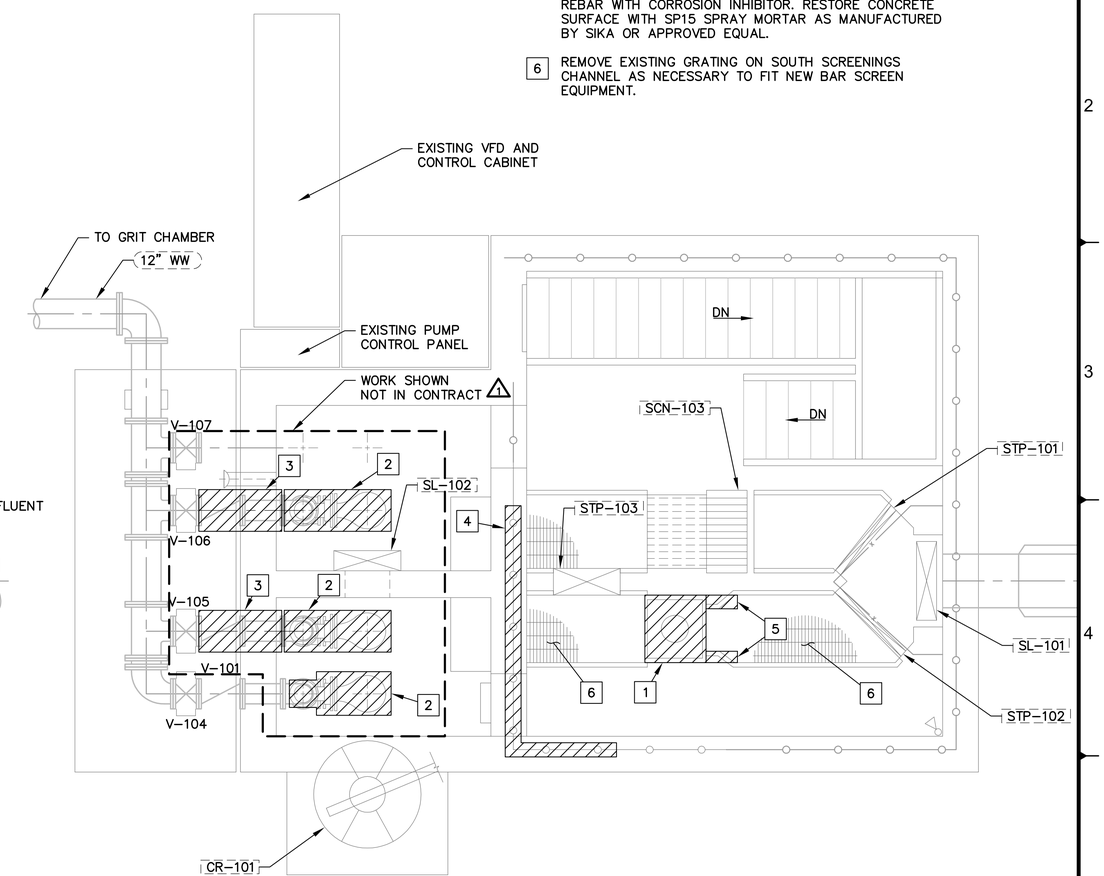

DEMOLITION DETAIL
SCALE: 3/8"=1'=0"

RECORD DRAWING

THIS RECORD DRAWING IS NOT WARRANTED BUT IS BELIEVED TO REPRESENT CONDITIONS UPON COMPLETION OF CONSTRUCTION WITHIN REASONABLE TOLERANCES, BASED UPON THE INFORMATION FURNISHED TO THE ENGINEER PERTAINING TO CHANGES MADE DURING CONSTRUCTION.

GRAPHIC SCALE
0 1' 2' 4' 6'
SCALE: 3/8"=1'-0"

REV	DESCRIPTION	ENGR	DATE	APPD	DATE
1	AS-BUILT	TF/MH	11/2012		

PROGRESS: RECORD DRAWINGS
SUBMITTAL DATE: 11/14/2012
PROJECT MANAGER: T. FALK
DESIGNED BY: K.L.B, A.E.G, M.D.H
DRAWN BY: K.K, C.S, N.H
CHECKED BY: S. DEERING

REGISTERED PROFESSIONAL ENGINEER TOM C. FALK CIVIL STATE OF CALIFORNIA Exp. 6/30/12

PLANS PREPARED BY:
DUDEK
605 Third Street Encinitas, CA 92024
760.942.5147 Fax 760.942.4508

City of Guadalupe
Public Works Dept.
918 Obispo Street, Guadalupe, California 93434
Tel 805-356-3891 Fax 805-343-5512

WASTEWATER TREATMENT PLANT IMPROVEMENT PROJECT

HEADWORKS
PLAN

DWG. M-1
PROJECT NO. 6576
SHT. NO. 30 OF 50

P:\101 Engineering\Guadalupe, City of\6576-Wastewater Treatment Plant\6 Design Data\CAD\6576\dwg\As-Builts 8-23-12\6576 SH30 M-1 11/14/2012 11:28 AM

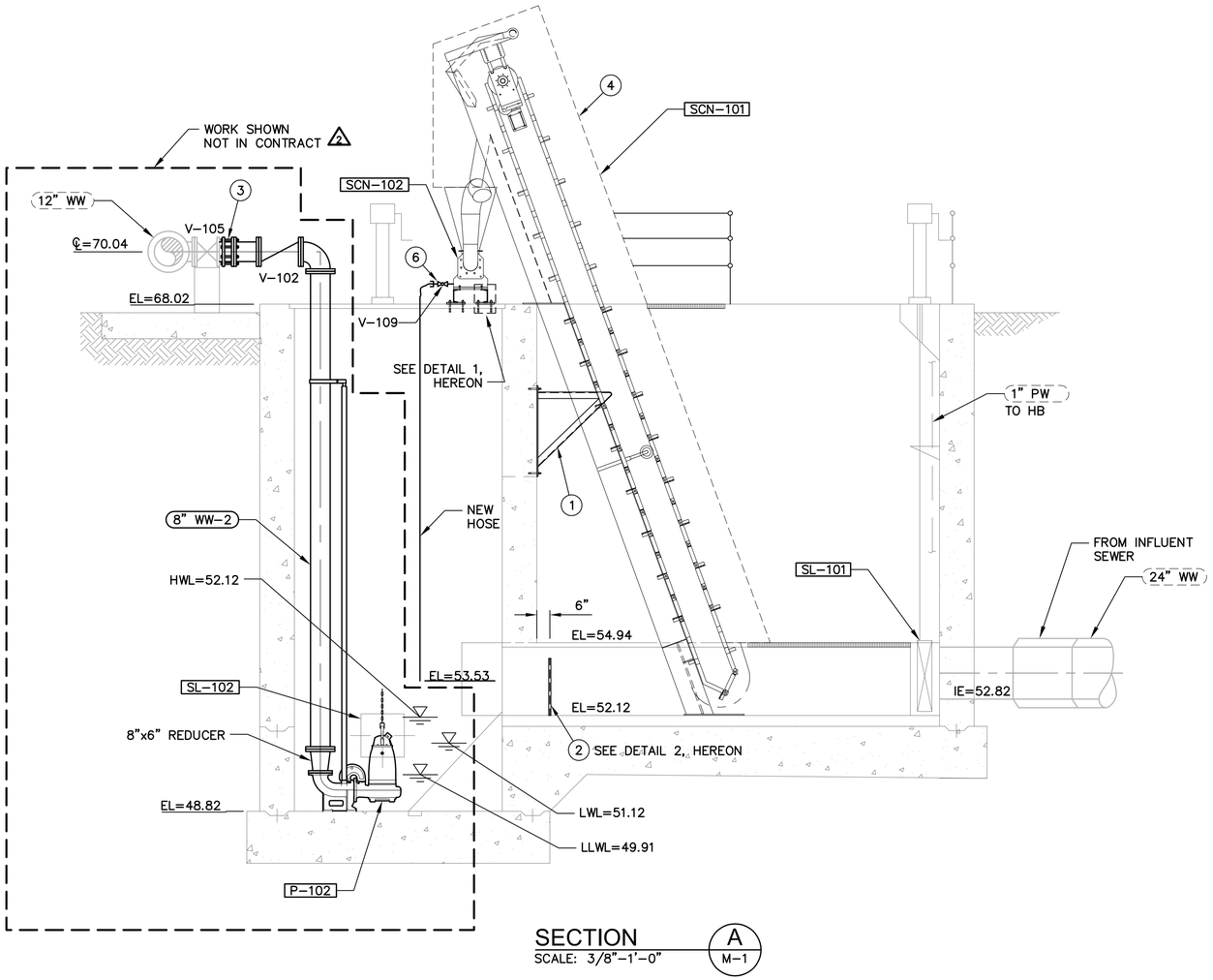

SECTION A / M-1
SCALE: 3/8"=1'-0"

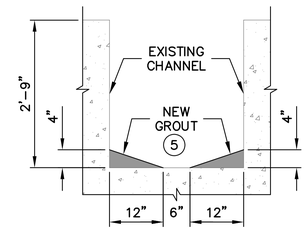

NOTE: SECTION "B" APPLIED TO AREA OF CHANNEL UPSTREAM OF SCREEN ONLY 2 RFI #41

SECTION B / M-1
SCALE: 3/4"=1'-0"

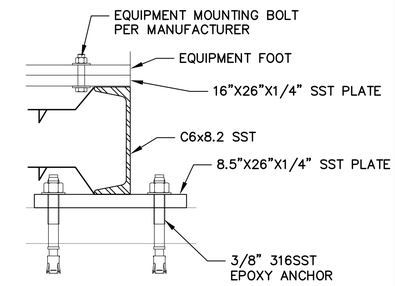

DETAIL 1 / –
NOT TO SCALE

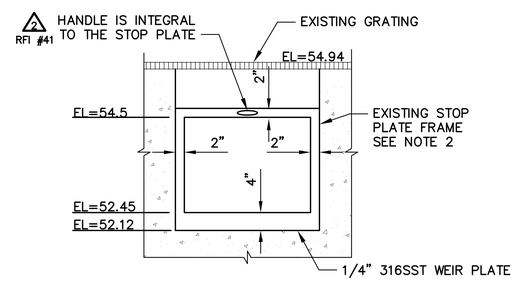

DETAIL 2 / –
NOT TO SCALE

IMPROVEMENT LEGEND

1 (1) INSTALL MANUFACTURER SUPPLIED METAL SUPPORT BRACKET FOR BAR SCREEN.

(2) RECTANGULAR WEIR TO BE INSERTED IN EXISTING STOP PLATE FRAME.

(3) ~~INSTALL A DISMANTLING JOINT BETWEEN CHECK AND GATE VALVE. CHECK VALVE SHALL IMMEDIATELY FOLLOW 90 DEGREE BEND.~~ NOT IN CONTRACT 2

(4) BAR SCREEN SHALL HAVE A FRONT ENCLOSURE EXTENDING FULL HEIGHT OF EQUIPMENT TO THE GRATING ABOVE INFLUENT CHANNEL. SEE SPECIFICATION SECTION 11410.

(5) NEW GROUT IN CHANNEL, SEE NOTE 1

(6) CONNECT TO EQUIPMENT DRAIN LINE PER DTL 3, DWG M-11

NOTES:

1. SAW CUT 1" DEEP TERMINATIONS. REMOVE CONCRETE A MINIMUM OF 1" AND PROVIDE A MINIMUM 1/8" PROFILE. APPLY SIKADUR 32 HIMOD EPOXY BONDING AGENT. WHILE THE BONDING AGENT REMAINS TACKY, FILL AND SLOPE WITH SIKACRETE 211 SCC PLUS, OR EQUAL.
2. CONTRACTOR TO FIELD VERIFY STOP PLATE FRAME DIMENSIONS PRIOR TO FABRICATION.

RECORD DRAWING

THIS RECORD DRAWING IS NOT WARRANTED BUT IS BELIEVED TO REPRESENT CONDITIONS UPON COMPLETION OF CONSTRUCTION WITHIN REASONABLE TOLERANCES, BASED UPON THE INFORMATION FURNISHED TO THE ENGINEER PERTAINING TO CHANGES MADE DURING CONSTRUCTION.

GRAPHIC SCALE
0 1' 2' 4' 6'
SCALE: 3/8"=1'-0"

REV	DESCRIPTION	ENGR	DATE	APPD	DATE
2	AS-BUILT	TF/MH	11/2012		
1	ADDENDUM No. 1		8/1/11		

PROGRESS: RECORD DRAWINGS
SUBMITTAL DATE: 11/14/2012
PROJECT MANAGER: T. FALK
DESIGNED BY: K.L.B, A.E.G, M.D.H
DRAWN BY: K.K, C.S, N.H
CHECKED BY: S. DEERING

REGISTERED PROFESSIONAL ENGINEER TIM C. FALK Exp. 6/30/12 CIVIL STATE OF CALIFORNIA

PLANS PREPARED BY:
DUDEK
605 Third Street Encinitas, CA 92024
760.942.5147 Fax 760.942.4508

City of Guadalupe
Public Works Dept.
918 Obispo Street, Guadalupe, California 93434
Tel 805-356-3891 Fax 805-343-5512

WASTEWATER TREATMENT PLANT IMPROVEMENT PROJECT

HEADWORKS SECTIONS AND DETAILS

DWG. M-2
PROJECT NO. 6576
SHT. NO. 31 OF 50

P:\101.Engineering\Guadalupe, City of\6576-Wastewater Treatment Plant\6 Design Data\CAD6576\dwg\As-Builts 8-23-12\6576 SH31 M-2 11/14/2012 11:28 AM

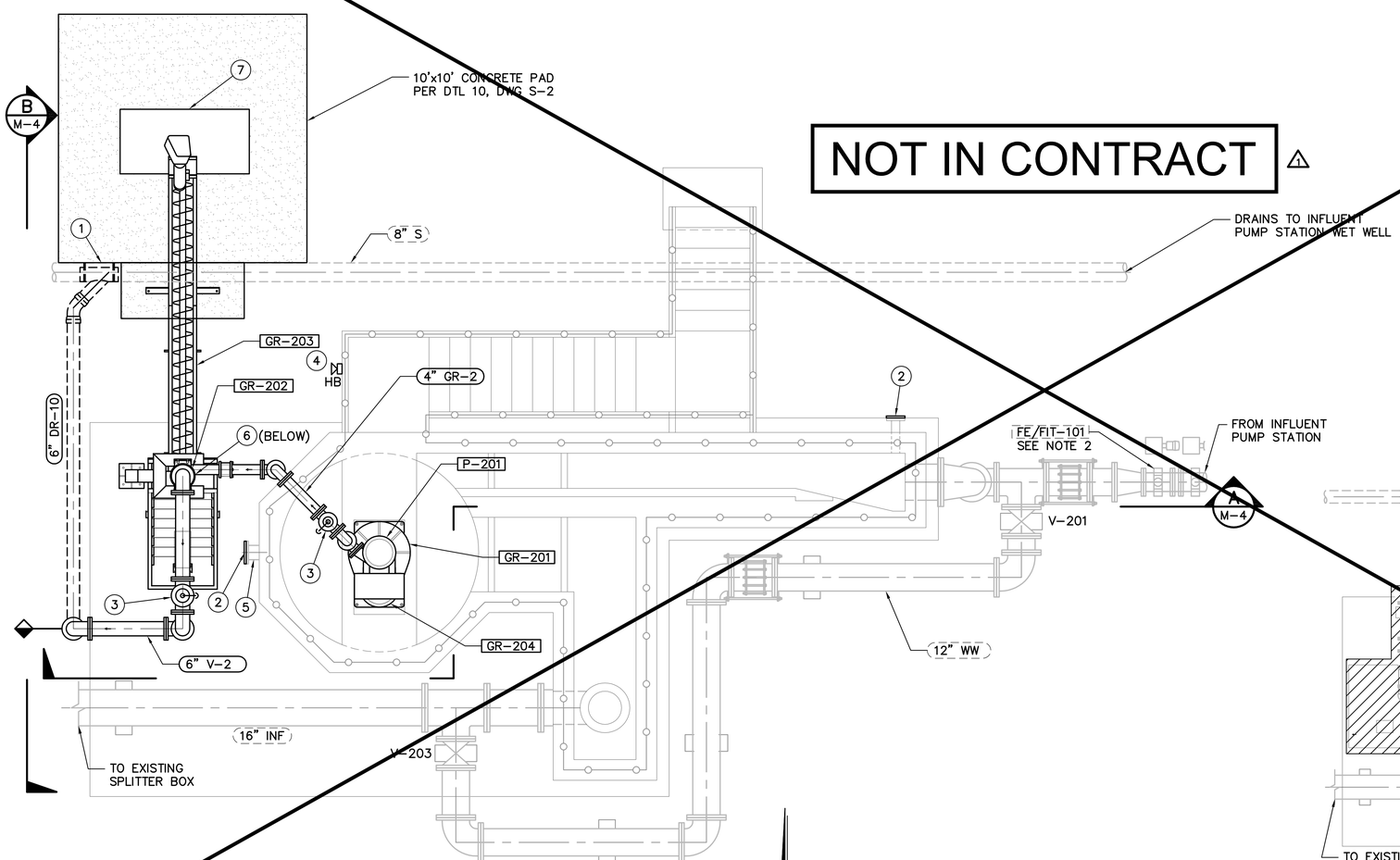

NOT IN CONTRACT

PLAN
SCALE: 3/8"=1'=0"

GRAPHIC SCALE
0 1' 2' 4' 6'
SCALE: 3/8"=1'-0"

DEMOLITION LEGEND:

1. REMOVE AND DISPOSE OF EXISTING GRIT PUMP, MOTOR, DRIVE, PIPING, AND VALVES.
2. REMOVE AND DISPOSE OF EXISTING GRIT PROPELLER DRIVE SYSTEM AND MOTOR.
3. REMOVE AND DISPOSE OF EXISTING GRIT CLASSIFIER AND CONCRETE PEDESTALS.

IMPROVEMENT LEGEND:

1. CONNECT DRAINAGE PIPING TO EXISTING 8" SEWER.
2. INSTALL BLIND FLANGE.
3. SEWAGE AIR RELIEF VALVE PER DTL 4, DWG M-11.
4. HOSE BIBB PER DTL 1, DWG M-11.
5. PLUG EXISTING GRIT PIPE PENETRATION WITH CONCRETE FLUSH WITH SUMP.
6. INSTALL 6" NEOPRENE HOSE TO END OF CONCENTRATOR OUTLET WITH HOSE CLAMP. NEOPRENE HOSE SHALL TERMINATE 6" ABOVE CLASSIFIER HIGH WATER LEVEL.
7. FURNISH AND INSTALL 1.5 CY ROLLING BIN.

NOTES:

1. EXISTING GRIT CHAMBER STRUCTURE TO REMAIN PROTECTED IN PLACE. CONTRACTOR IS RESPONSIBLE FOR REPAIRING DAMAGE TO ANY EXISTING STRUCTURES OR EQUIPMENT.
2. EXISTING FLOWMETER TO BE RELOCATED PER DTL 1, DWG M-4.

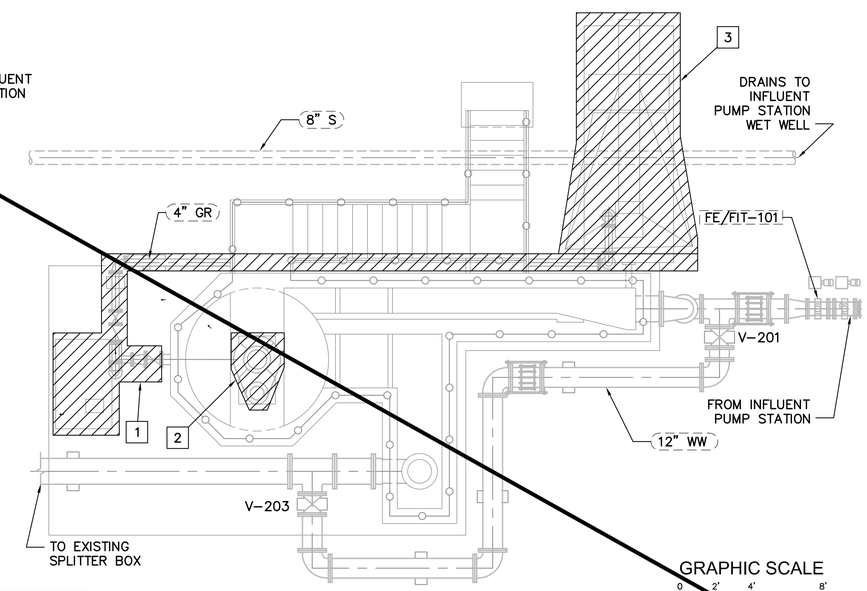

GRAPHIC SCALE
0 2' 4' 8'
SCALE: 1/4"=1'-0"

DEMOLITION DETAIL
SCALE: 1/4"=1'=0"

RECORD DRAWING

THIS RECORD DRAWING IS NOT WARRANTED BUT IS BELIEVED TO REPRESENT CONDITIONS UPON COMPLETION OF CONSTRUCTION WITHIN REASONABLE TOLERANCES, BASED UPON THE INFORMATION FURNISHED TO THE ENGINEER PERTAINING TO CHANGES MADE DURING CONSTRUCTION.

REV	DESCRIPTION	ENGR	DATE	APPD	DATE
1	AS-BUILT	TF/MH	11/2012		

PROGRESS: RECORD DRAWINGS
SUBMITTAL DATE: 11/14/2012
PROJECT MANAGER: T. FALK
DESIGNED BY: K.L.B, A.E.G, M.D.H
DRAWN BY: K.K, C.S, N.H
CHECKED BY: S. DEERING

REGISTERED PROFESSIONAL ENGINEER TOM C. FALK No. 63780 Exp. 6/30/12 CIVIL STATE OF CALIFORNIA

PLANS PREPARED BY:
DUDEK
605 Third Street Encinitas, CA 92024
760.942.5147 Fax 760.942.4508

City of Guadalupe
Public Works Dept.
918 Obispo Street, Guadalupe, California 93434
Tel 805-356-3891 Fax 805-343-5512

WASTEWATER TREATMENT PLANT IMPROVEMENT PROJECT

GRIT REMOVAL PLAN

DWG. M-3
PROJECT NO. 6576
SHT. NO. 32 OF 50

P:\101.Engineering\Guadalupe, City of\6576-Wastewater Treatment Plant\6 Design Data\CAD6576\dwg\As-Builts 8-23-12\6576 SH32 M-3 11/14/2012 11:28 AM

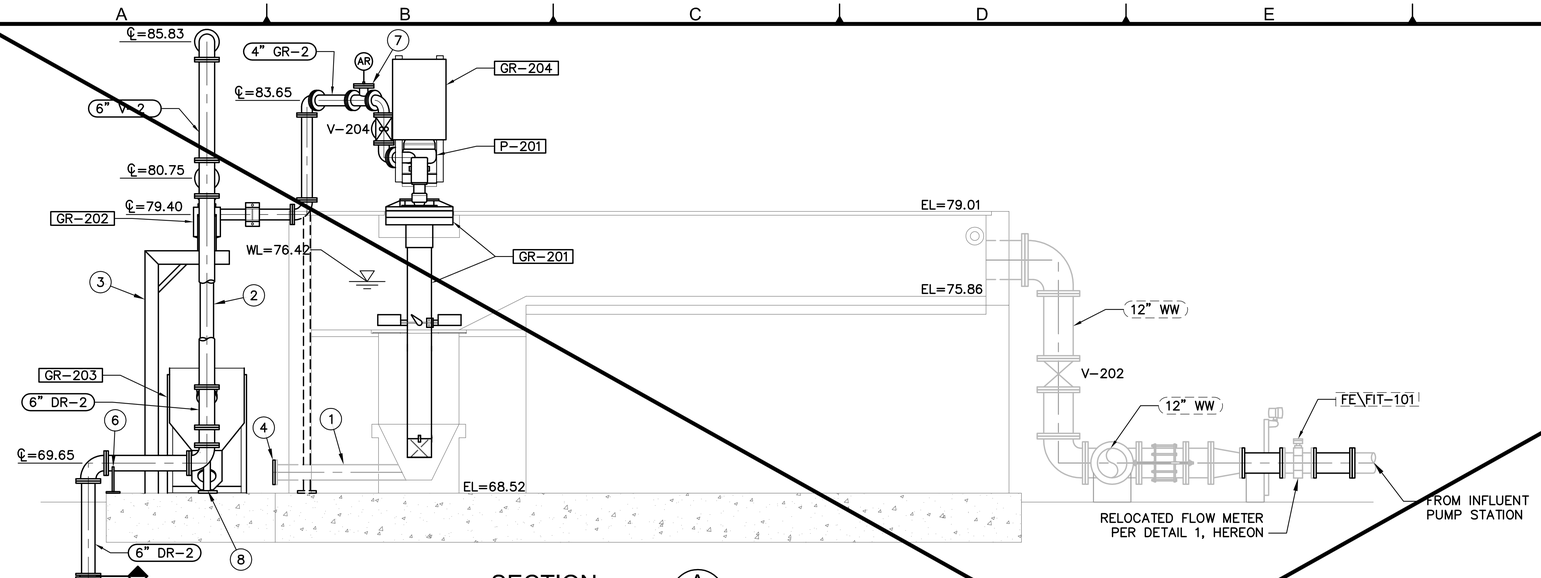

SECTION A M-3
SCALE: 3/8"=1'-0"

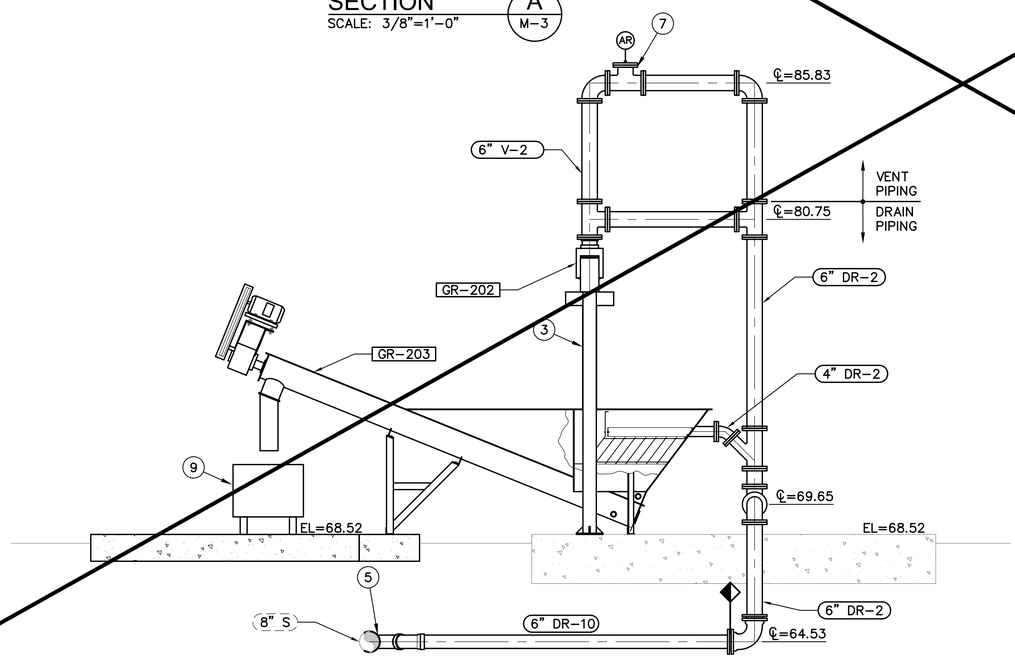

SECTION B M-3
SCALE: 3/8"=1'-0"

IMPROVEMENTS LEGEND

1. PLUG EXISTING GRIT PIPE PENETRATION WITH CONCRETE FLUSH WITH SUMP.
2. INSTALL 6" NEOPRENE HOSE TO END OF CONCENTRATOR OUTLET WITH HOSE CLAMP. NEOPRENE HOSE SHALL TERMINATE 6" ABOVE CLASSIFIER HIGH WATER LEVEL.
3. EQUIPMENT SUPPORT PER MANUFACTURER.
4. INSTALL BLIND FLANGE.
5. CONNECT DRAINAGE PIPING TO EXISTING SEWER.
6. TYPE I PIPE SUPPORT PER DTL 1, DWG M-12.
7. SEWAGE RELIEF VALVE PER DTL 4, DWG M-11.
8. PIPE SUPPORT PER DTL 5, DWG M-12.
9. FURNISH AND INSTALL 1.5 CY ROLLING BIN.

NOT IN CONTRACT △1

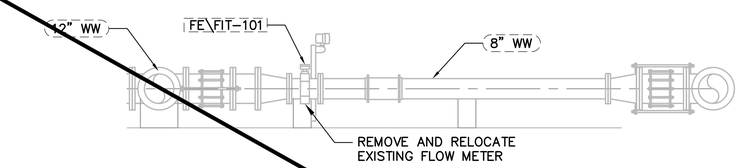

EXISTING FIELD CONDITIONS

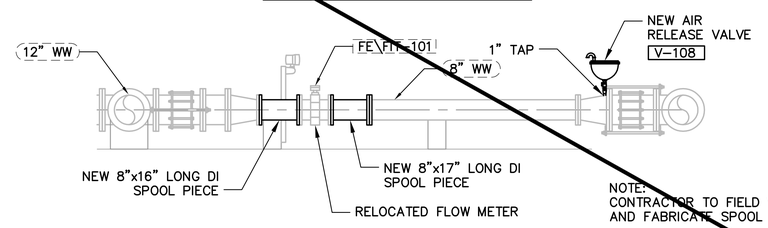

PROPOSED MODIFICATIONS

NOTE:
CONTRACTOR TO FIELD VERIFY EXISTING CONDITIONS AND FABRICATE SPOOL PIECES APPROPRIATELY.

RECORD DRAWING

THIS RECORD DRAWING IS NOT WARRANTED BUT IS BELIEVED TO REPRESENT CONDITIONS UPON COMPLETION OF CONSTRUCTION WITHIN REASONABLE TOLERANCES, BASED UPON THE INFORMATION FURNISHED TO THE ENGINEER PERTAINING TO CHANGES MADE DURING CONSTRUCTION.

DETAIL 1 M-3
NOT TO SCALE

GRAPHIC SCALE
0 1' 2' 4' 6'
SCALE: 3/8"=1'-0"

REV	DESCRIPTION	ENGR	DATE	APPD	DATE
△1	AS-BUILT	TF/MH	11/2012		

PROGRESS: RECORD DRAWINGS
SUBMITTAL DATE: 11/14/2012
PROJECT MANAGER: T. FALK
DESIGNED BY: K.L.B, A.E.G, M.D.H
DRAWN BY: K.K, C.S, N.H
CHECKED BY: S. DEERING

REGISTERED PROFESSIONAL ENGINEER TOM C. FALK No. 69780 Exp. 6/30/12 CIVIL STATE OF CALIFORNIA

PLANS PREPARED BY:
DUDEK
605 Third Street Encinitas, CA 92024
760.942.5147 Fax 760.942.4508

City of Guadalupe
Public Works Dept.
918 Obispo Street, Guadalupe, California 93434
Tel 805-356-3891 Fax 805-343-5512

WASTEWATER TREATMENT PLANT IMPROVEMENT PROJECT

GRIT REMOVAL
SECTIONS AND DETAILS

DWG. M-4
PROJECT NO. 6576
SHT. NO. 33 OF 50

P:\101.Engineering\Guadalupe, City of\6576-Wastewater Treatment Plant\6 Design Data\CAD6576\dwg\As-Builts 8-23-12\6576 SH33 M-4 11/14/2012 11:28 AM

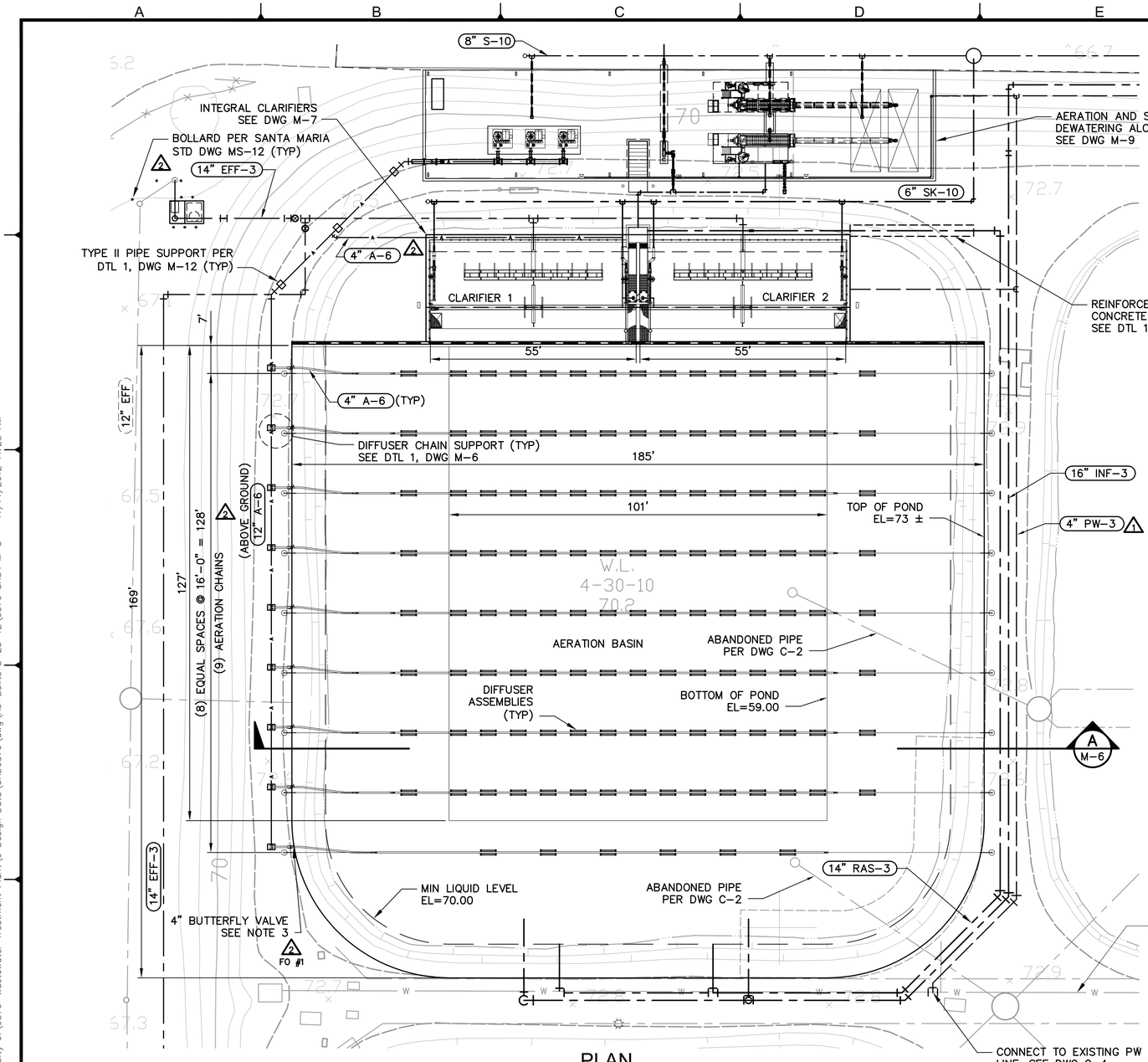

PLAN
SCALE: 1/16"=1'-0"

NOTE:

1. REFER TO MANUFACTURER INSTALLATION DRAWINGS AND SPECIFICATION SECTION 11460 FOR INSTALLATION OF ALL BIOLOGICAL SYSTEM EQUIPMENT AND MATERIALS.
2. FOR GENERAL CIVIL IMPROVEMENTS SEE DWGS C-3 AND C-4.
3. BUTTERFLY VALVES ON AERATION CHAINS 1 THROUGH 8 (CHAINS OVER BASIN FLOOR) SHALL BE INSTALLED WITH ELECTRICAL MOTOR ACTUATORS. BUTTERFLY VALVES ON AERATION CHAIN 9 (CHAIN OVER SOUTHERN BASIN SLOPE) SHALL BE INSTALLED WITH A MANUAL OPERATOR. (2 FO #1)

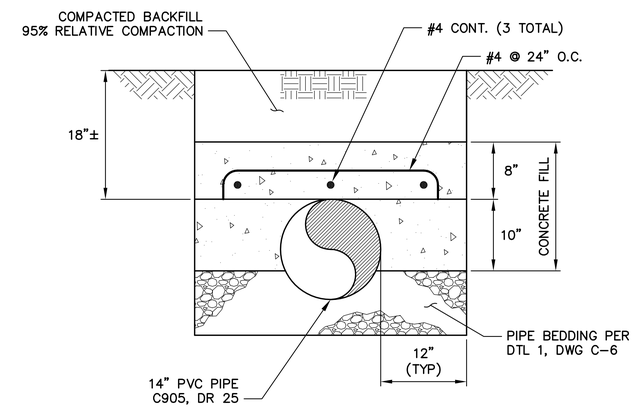

REINFORCED STRUCTURAL CONCRETE CAP
NOT TO SCALE
1 –

GRAPHIC SCALE
0 8' 16' 32'
SCALE: 1/16"=1'-0"

RECORD DRAWING
THIS RECORD DRAWING IS NOT WARRANTED BUT IS BELIEVED TO REPRESENT CONDITIONS UPON COMPLETION OF CONSTRUCTION WITHIN REASONABLE TOLERANCES, BASED UPON THE INFORMATION FURNISHED TO THE ENGINEER PERTAINING TO CHANGES MADE DURING CONSTRUCTION.

REV	DESCRIPTION	ENGR	DATE	APPD	DATE
2	AS-BUILT	TF/MH	11/2012		
1	ADDENDUM No. 2		8/8/11		

PROGRESS: RECORD DRAWINGS
SUBMITTAL DATE: 11/14/2012
PROJECT MANAGER: T. FALK
DESIGNED BY: K.L.B, A.E.G, M.D.H
DRAWN BY: K.K, C.S, N.H
CHECKED BY: S. DEERING

REGISTERED PROFESSIONAL ENGINEER TIM C. FALK Exp. 6/30/12 CIVIL STATE OF CALIFORNIA

PLANS PREPARED BY:
DUDEK
605 Third Street Encinitas, CA 92024
760.942.5147 Fax 760.942.4508

City of Guadalupe
Public Works Dept.
918 Obispo Street, Guadalupe, California 93434
Tel 805-356-3891 Fax 805-343-5512

WASTEWATER TREATMENT PLANT IMPROVEMENT PROJECT

AERATION BASIN PLAN

DWG. M-5
PROJECT NO. 6576
SHT. NO. 34 OF 50

P:\101.Engineering\Guadalupe, City of\6576-Wastewater Treatment Plant\6 Design Data\CAD6576\dwg\As-Builts 8-23-12\6576 SH34 M-5 11/14/2012 11:28 AM

NOTE:

1. REFER TO MANUFACTURER INSTALLATION DRAWINGS AND SPECIFICATION SECTION 11460 FOR INSTALLATION OF ALL BIOLOGICAL SYSTEM EQUIPMENT AND MATERIALS.

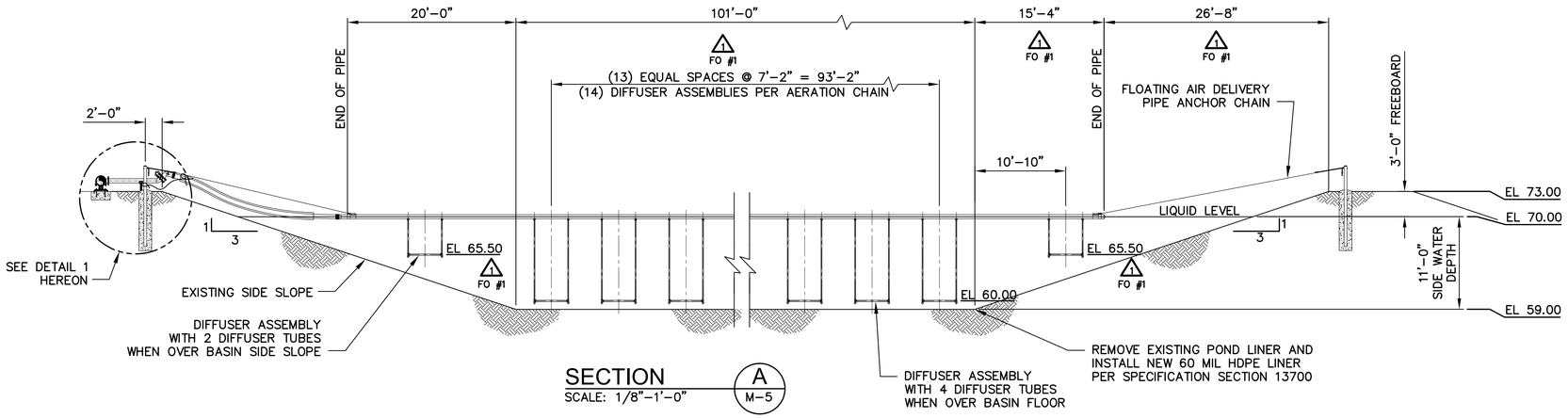

SECTION A/M-5
SCALE: 1/8"-1'-0"

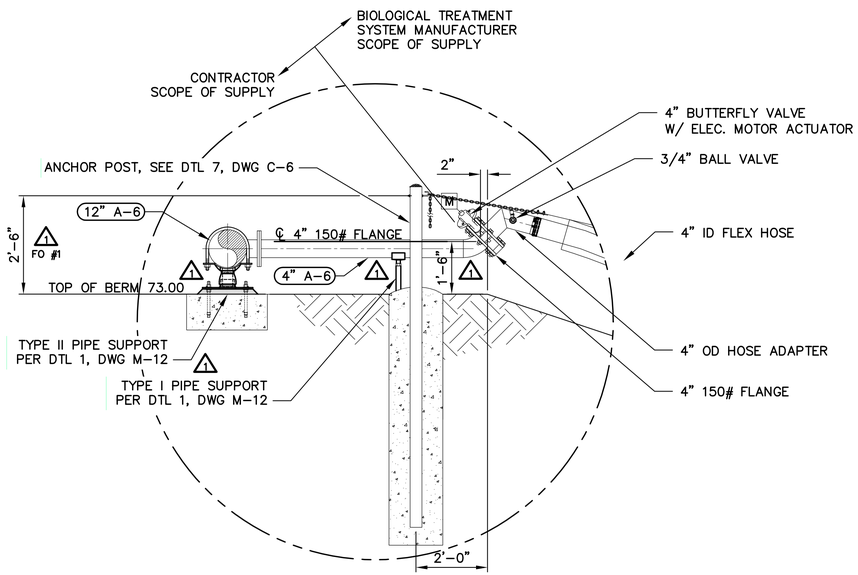

DIFFUSER CHAIN SUPPORT DETAIL 1/-
SCALE: 1/2"-1'-0"

GRAPHIC SCALE
0 4' 8' 16'
SCALE: 1/8"=1'-0"

GRAPHIC SCALE
0 1' 2' 4'
SCALE: 1/2"=1'-0"

RECORD DRAWING

THIS RECORD DRAWING IS NOT WARRANTED BUT IS BELIEVED TO REPRESENT CONDITIONS UPON COMPLETION OF CONSTRUCTION WITHIN REASONABLE TOLERANCES, BASED UPON THE INFORMATION FURNISHED TO THE ENGINEER PERTAINING TO CHANGES MADE DURING CONSTRUCTION.

REV	DESCRIPTION	ENGR	DATE	APPD	DATE
1	AS-BUILT	TF/MH	11/2012		

PROGRESS: RECORD DRAWINGS
SUBMITTAL DATE: 11/14/2012
PROJECT MANAGER: T. FALK
DESIGNED BY: K.L.B, A.E.G, M.D.H
DRAWN BY: K.K, C.S, N.H
CHECKED BY: S. DEERING

REGISTERED PROFESSIONAL ENGINEER TOM C. FALK No. 69780 Exp. 6/30/12 CIVIL STATE OF CALIFORNIA

PLANS PREPARED BY:
DUDEK
605 Third Street Encinitas, CA 92024
760.942.5147 Fax 760.942.4508

City of Guadalupe
Public Works Dept.
918 Obispo Street, Guadalupe, California 93434
Tel 805-356-3891 Fax 805-343-5512

WASTEWATER TREATMENT PLANT IMPROVEMENT PROJECT

AERATION BASIN SECTION AND DETAILS

DWG. M-6
PROJECT NO. 6576
SHT. NO. 35 OF 50

P:\101.Engineering\Guadalupe, City of\6576-Wastewater Treatment Plant\6 Design Data\CAD6576\dwg\As-Builts 8-23-12\6576 SH35 M-6 11/14/2012 11:28 AM

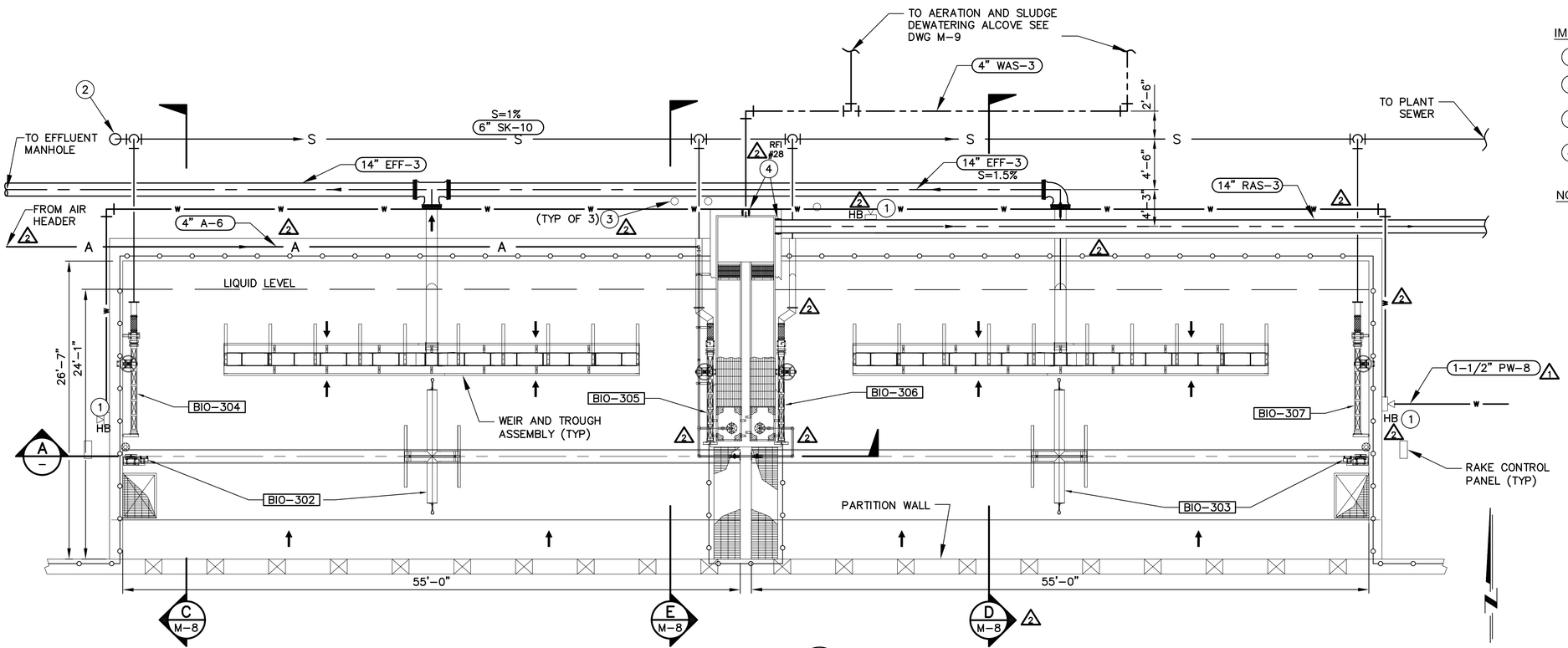

DETAIL 1 / M-5
SCALE: 3/16"=1'-0"

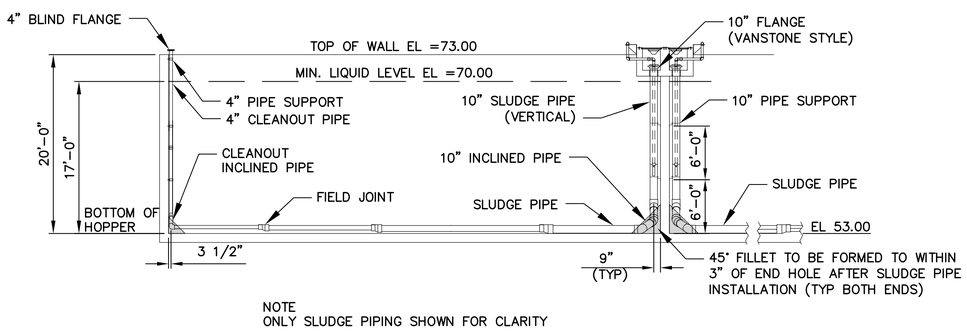

NOTE
ONLY SLUDGE PIPING SHOWN FOR CLARITY

SECTION A / –
SCALE: 1/8"=1'-0"

IMPROVEMENT LEGEND:

1. HOSE BIBB PER DTL 1, DWG M-11.
2. SEWER CLEAN-OUT PER CITY OF SANTA MARIA STANDARD DRAWING SS-12B.
3. BOLLARD PER CITY OF SANTA MARIA STANDARD DRAWING MS-12.
4. WALL SLEEVE PER DTL 2, DWG M-12 RFI #28

NOTES:

1. REFER TO MANUFACTURER INSTALLATION DRAWINGS AND SPECIFICATION SECTION 11460 FOR INSTALLATION OF ALL BIOLOGICAL SYSTEM EQUIPMENT AND MATERIALS.
2. FOR CIVIL IMPROVEMENTS SEE DWGS C-3 AND C-4.

GRAPHIC SCALE
0 4' 8' 16'
SCALE: 1/8"=1'-0"

GRAPHIC SCALE
0 2' 4' 8' 12'
SCALE: 3/16"=1'-0"

RECORD DRAWING
THIS RECORD DRAWING IS NOT WARRANTED BUT IS BELIEVED TO REPRESENT CONDITIONS UPON COMPLETION OF CONSTRUCTION WITHIN REASONABLE TOLERANCES, BASED UPON THE INFORMATION FURNISHED TO THE ENGINEER PERTAINING TO CHANGES MADE DURING CONSTRUCTION.

REV	DESCRIPTION	ENGR	DATE	APPD	DATE
2	AS-BUILT	TF/MH	11/2012		
1	ADDENDUM No. 2		8/8/11		

PROGRESS: RECORD DRAWINGS
SUBMITTAL DATE: 11/14/2012
PROJECT MANAGER: T. FALK
DESIGNED BY: K.L.B, A.E.G, M.D.H
DRAWN BY: K.K, C.S, N.H
CHECKED BY: S. DEERING

REGISTERED PROFESSIONAL ENGINEER TOM C. FALK No. 63780 Exp. 6/30/12 CIVIL STATE OF CALIFORNIA

PLANS PREPARED BY:
DUDEK
605 Third Street Encinitas, CA 92024
760.942.5147 Fax 760.942.4508

City of Guadalupe
Public Works Dept.
918 Obispo Street, Guadalupe, California 93434
Tel 805-356-3891 Fax 805-343-5512

WASTEWATER TREATMENT PLANT IMPROVEMENT PROJECT

CLARIFIER PLAN AND SECTIONS

DWG. M-7
PROJECT NO. 6576
SHT. NO. 36 OF 50

P:\101.Engineering\Guadalupe, City of\6576-Wastewater Treatment Plant\6 Design Data\CAD6576\dwg\As-Builts 8-23-12\6576 SH36 M-7 11/14/2012 11:29 AM

IMPROVEMENT LEGEND:

1. PIPE PENETRATION PER DTL 7, DWG M-11.
2. WALL SLEEVE PER DTL 2, DWG M-12 (RFI #28)

NOTES:

1. REFER TO MANUFACTURER INSTALLATION DRAWINGS AND SPECIFICATION SECTION 11460 FOR INSTALLATION OF ALL BIOLOGICAL SYSTEM EQUIPMENT AND MATERIALS.
2. FOR CIVIL IMPROVEMENTS SEE DWGS C-3 AND C-4.

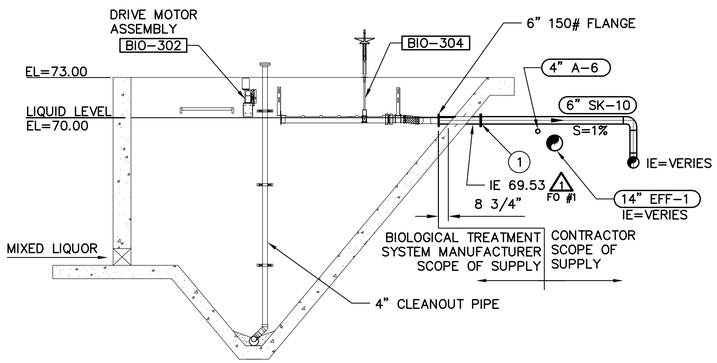

SECTION C / M-7
SCALE: 3/16"-1'-0"

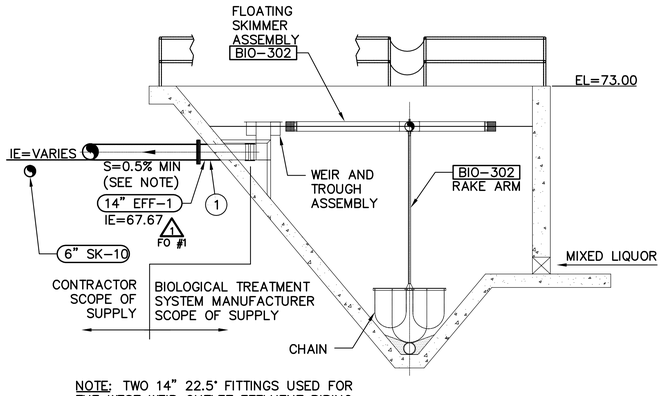

NOTE: TWO 14" 22.5° FITTINGS USED FOR THE WEST WEIR OUTLET EFFLUENT PIPING.

SECTION D / M-7
SCALE: 3/16"-1'-0"

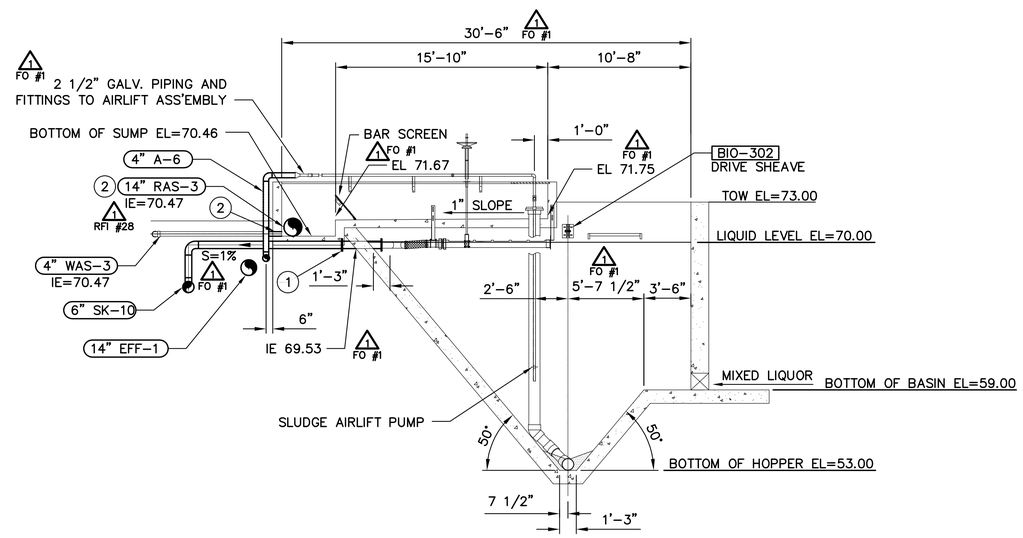

SECTION E / M-7
SCALE: 3/16"-1'-0"

GRAPHIC SCALE
0 2' 4' 8' 12'
SCALE: 3/16"=1'-0"

RECORD DRAWING

THIS RECORD DRAWING IS NOT WARRANTED BUT IS BELIEVED TO REPRESENT CONDITIONS UPON COMPLETION OF CONSTRUCTION WITHIN REASONABLE TOLERANCES, BASED UPON THE INFORMATION FURNISHED TO THE ENGINEER PERTAINING TO CHANGES MADE DURING CONSTRUCTION.

REV	DESCRIPTION	ENGR	DATE	APPD	DATE
1	AS-BUILT	TF/MH	11/2012		

PROGRESS: RECORD DRAWINGS
SUBMITTAL DATE: 11/14/2012
PROJECT MANAGER: T. FALK
DESIGNED BY: K.L.B, A.E.G, M.D.H
DRAWN BY: K.K, C.S, N.H
CHECKED BY: S. DEERING

REGISTERED PROFESSIONAL ENGINEER — TOM C. FALK — CIVIL — STATE OF CALIFORNIA — Exp. 6/30/12

PLANS PREPARED BY:
DUDEK
605 Third Street Encinitas, CA 92024
760.942.5147 Fax 760.942.4508

City of Guadalupe
Public Works Dept.
918 Obispo Street, Guadalupe, California 93434
Tel 805-356-3891 Fax 805-343-5512

WASTEWATER TREATMENT PLANT IMPROVEMENT PROJECT

CLARIFIER SECTIONS AND DETAILS

DWG. M-8
PROJECT NO. 6576
SHT. NO. 37 OF 50

P:\101 Engineering\Guadalupe, City of\6576-Wastewater Treatment Plant\6 Design Data\CAD\6576\dwg\As-Builts 8-23-12\6576 SH37 M-8 11/14/2012 11:29 AM

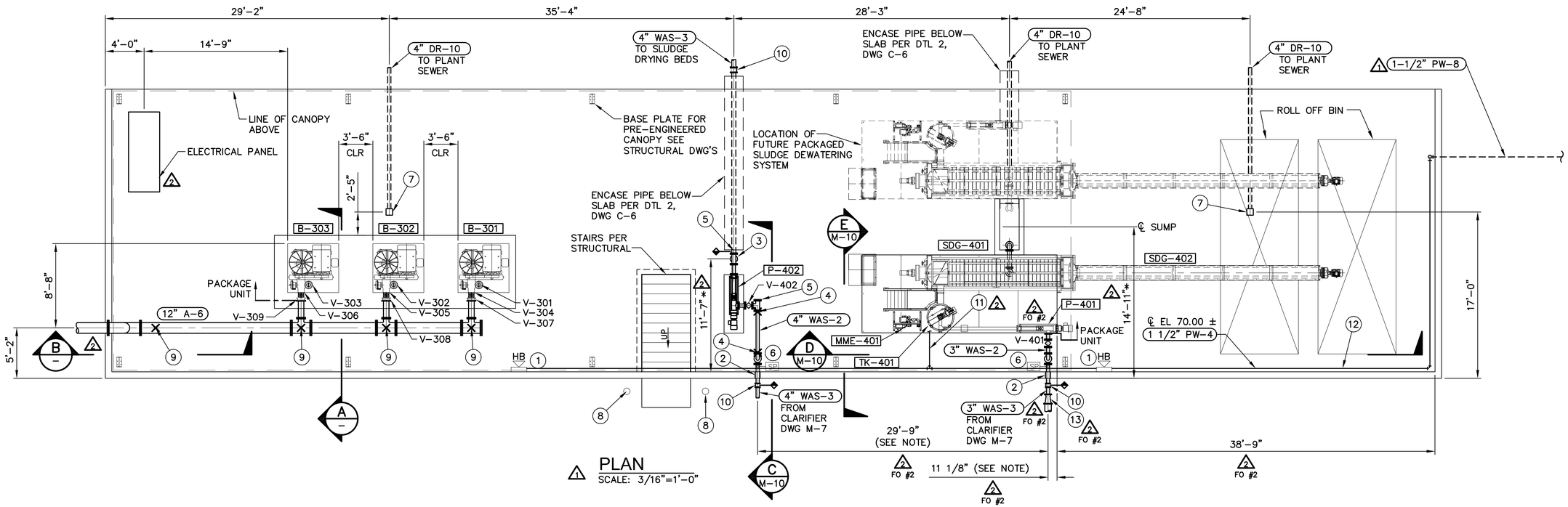

PLAN
SCALE: 3/16"=1'-0"

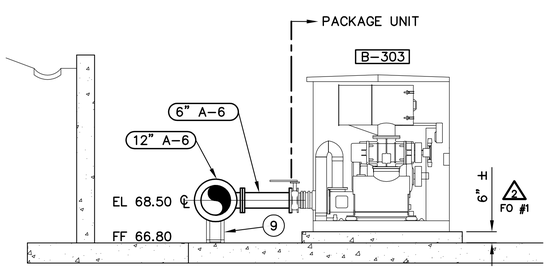

SECTION A
SCALE: 3/8"-1'-0"

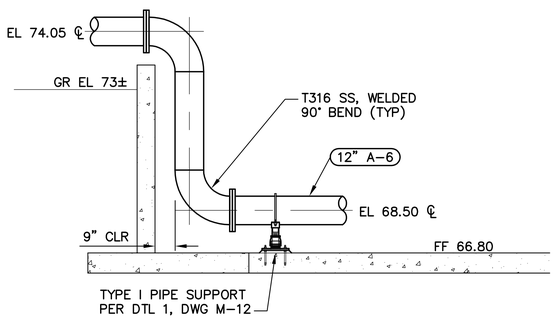

SECTION B
SCALE: 3/8"-1'-0"

IMPROVEMENT LEGEND

1. INSTALL HOSE BIBB PER DTL 1, DWG M-11
2. WALL PENETRATION PER DTL 2, DWG M-12
3. SLAB PENETRATION PER DTL 4, DWG M-12.
4. TYPE III PIPE SUPPORT PER DTL 1, DWG M-12.
5. SLUDGE FLUSHING CONNECTION PER DTL 6, DWG M-11.
6. SLUDGE SAMPLE PORT PER DTL 5, DWG M-11.
7. HEAVY DUTY AREA DRAIN. WADE SQUARE FLOOR DRAIN, MODEL 2350 OR EQUAL.
8. BOLLARD PER CITY OF SANTA MARIA STANDARD DRAWING MS-12.
9. TYPE I PIPE SUPPORT PER DTL 1, DWG M-12.
10. RESTRAINED, INSULATING SLEEVE-TYPE COUPLING.
11. ROUT PLANT WATER PIPE AND CONNECT TO SCREW PRESS EQUIPMENT SKID.
12. SECURE PLANT WATER PIPE TO FACE OF WALL WITH UNISTRUT. MAXIMUM PIPE SUPPORT SPACING TO BE 10 FT.
13. 3"x4" MJ REDUCER (FO #2)

NOTE:
DIMENSIONS TO INLET ℄ OF P-401 BASED ON PACKAGED SLUDGE DEWATERING SYSTEM SHOP DRAWING SUBMITTAL. (FO #2)

* AS-BUILT DIMENSIONS, NOT DRAWN TO SCALE (2)

GRAPHIC SCALE
0 2' 4' 8' 12'
SCALE: 3/16"=1'-0"

RECORD DRAWING
THIS RECORD DRAWING IS NOT WARRANTED BUT IS BELIEVED TO REPRESENT CONDITIONS UPON COMPLETION OF CONSTRUCTION WITHIN REASONABLE TOLERANCES, BASED UPON THE INFORMATION FURNISHED TO THE ENGINEER PERTAINING TO CHANGES MADE DURING CONSTRUCTION.

REV	DESCRIPTION	ENGR	DATE	APPD	DATE
2	AS-BUILT	TF/MH	11/2012		
1	ADDENDUM No. 2 (DIMENSIONS ADDED)				

PROGRESS: RECORD DRAWINGS
SUBMITTAL DATE: 11/14/2012
PROJECT MANAGER: T. FALK
DESIGNED BY: K.L.B, A.E.G, M.D.H
DRAWN BY: K.K, C.S, N.H
CHECKED BY: S. DEERING

REGISTERED PROFESSIONAL ENGINEER TIM C. FALK CIVIL STATE OF CALIFORNIA Exp. 6/30/12

PLANS PREPARED BY:
DUDEK
605 Third Street Encinitas, CA 92024
760.942.5147 Fax 760.942.4508

City of Guadalupe
Public Works Dept.
918 Obispo Street, Guadalupe, California 93434
Tel 805-356-3891 Fax 805-343-5512

WASTEWATER TREATMENT PLANT IMPROVEMENT PROJECT

AERATION AND SLUDGE DEWATERING ALCOVE PLAN

DWG. M-9
PROJECT NO. 6576
SHT. NO. 38 OF 50

P:\101.Engineering\Guadalupe, City of\6576-Wastewater Treatment Plant\6 Design Data\CAD6576\dwg\As-Builts 8-23-12\6576 SH38 M-9 11/14/2012 11:29 AM

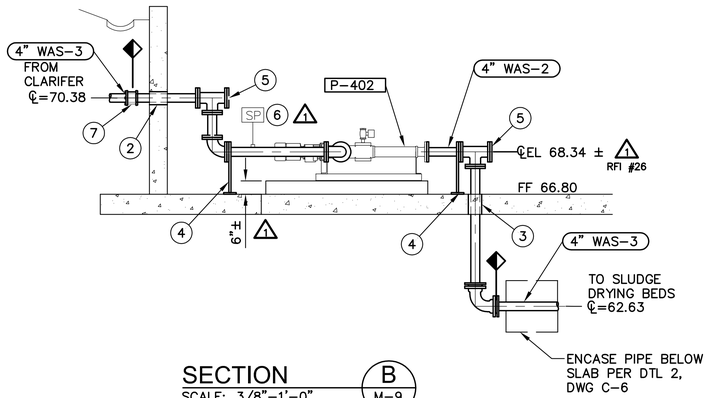

SECTION B / M-9
SCALE: 3/8"-1'-0"

IMPROVEMENT LEGEND

1. BIFORCATED DISCHARGE CHUTE PER SPECIFICATION SECTION 11600.
2. WALL PENETRATION PER DTL 2, DWG M-12
3. SLAB PENETRATION PER DTL 4, DWG M-12
4. TYPE III PIPE SUPPORT PER DTL 1, DWG M-12
5. SLUDGE FLUSHING CONNECTION PER DTL 6, DWG M-11
6. SLUDGE SAMPLE PORT PER DTL 5, DWG M-11.
7. RESTRAINED, INSULATING SLEEVE-TYPE COUPLING.

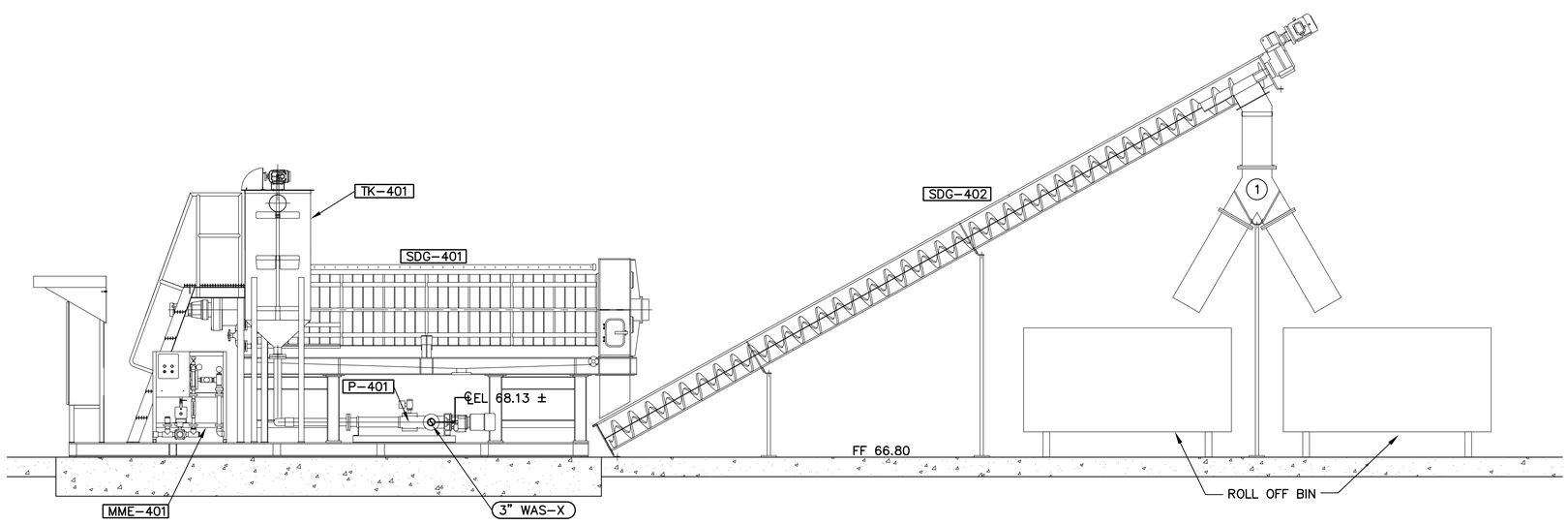

SECTION C / M-9
SCALE: 3/8"-1'-0"

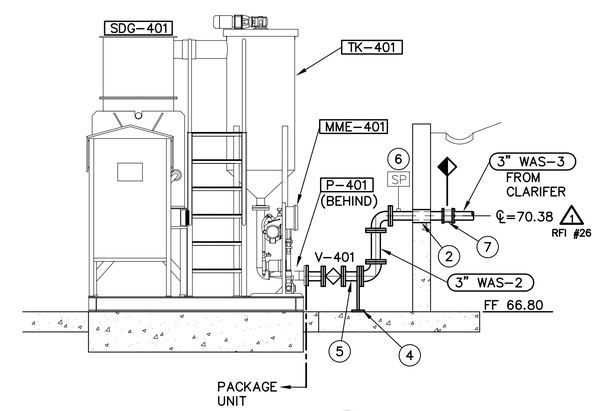

SECTION D / M-9
SCALE: 3/8"-1'-0"

GRAPHIC SCALE
0 1' 2' 4'
SCALE: 1/2"=1'-0"

RECORD DRAWING

THIS RECORD DRAWING IS NOT WARRANTED BUT IS BELIEVED TO REPRESENT CONDITIONS UPON COMPLETION OF CONSTRUCTION WITHIN REASONABLE TOLERANCES, BASED UPON THE INFORMATION FURNISHED TO THE ENGINEER PERTAINING TO CHANGES MADE DURING CONSTRUCTION.

REV	DESCRIPTION	ENGR	DATE	APPD	DATE
1	AS-BUILT	TF/MH	11/2012		

PROGRESS: RECORD DRAWINGS
SUBMITTAL DATE: 11/14/2012
PROJECT MANAGER: T. FALK
DESIGNED BY: K.L.B, A.E.G, M.D.H
DRAWN BY: K.K, C.S, N.H
CHECKED BY: S. DEERING

REGISTERED PROFESSIONAL ENGINEER — TOM C. FALK — Exp. 6/30/12 — CIVIL — STATE OF CALIFORNIA

PLANS PREPARED BY:
DUDEK
605 Third Street Encinitas, CA 92024
760.942.5147 Fax 760.942.4508

City of Guadalupe
Public Works Dept.
918 Obispo Street, Guadalupe, California 93434
Tel 805-356-3891 Fax 805-343-5512

WASTEWATER TREATMENT PLANT IMPROVEMENT PROJECT

AERATION AND SLUDGE
DEWATERING ALCOVE SECTIONS

DWG. M-10
PROJECT NO. 6576
SHT. NO. 39 OF 50

P:\101.Engineering\Guadalupe, City of\6576-Wastewater Treatment Plant\6 Design Data\CAD6576\dwg\As-Builts 8-23-12\6576 SH39 M-10 11/14/2012 11:29 AM

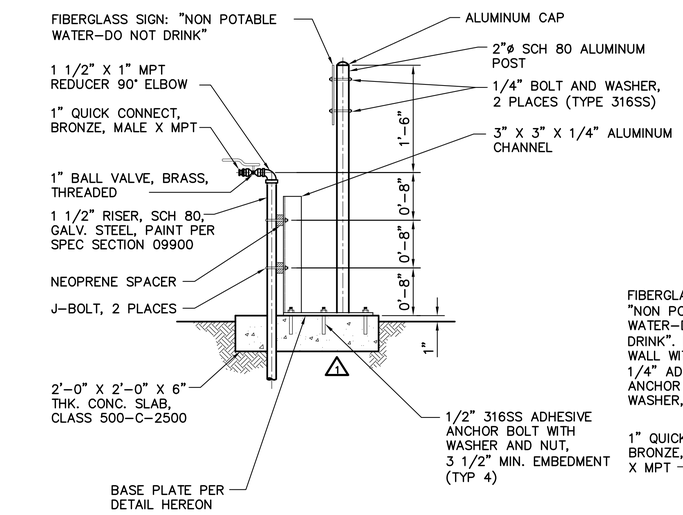

PAD MOUNTED

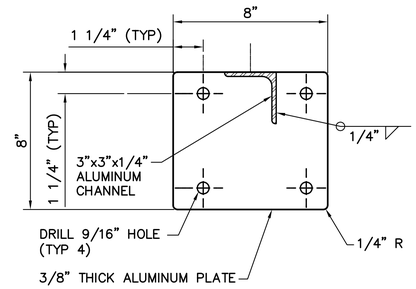

BASE PLATE – PLAN

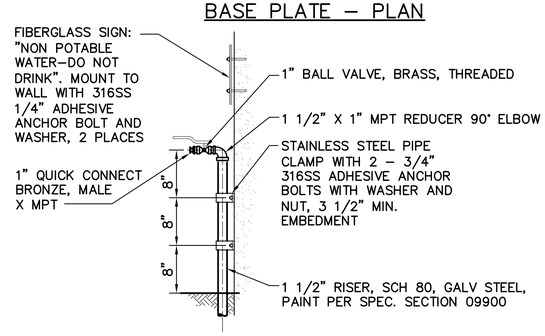

WALL MOUNTED

HOSE BIBB AND SIGN INSTALLATION DETAIL (1 / VAR)

NOT TO SCALE

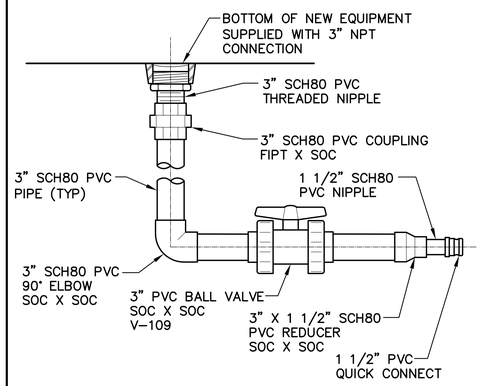

EQUIPMENT DRAIN LINE (3 / VAR)

NOT TO SCALE

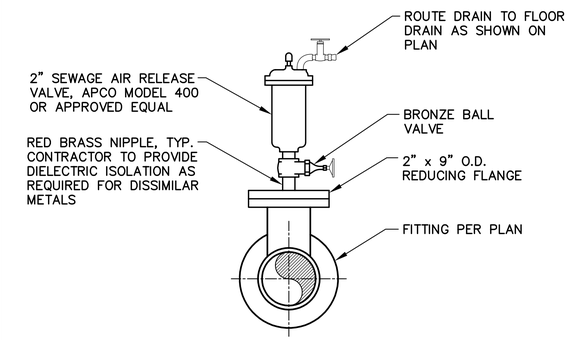

SEWAGE AIR RELEASE VALVE DETAIL (4 / VAR)

NOT TO SCALE

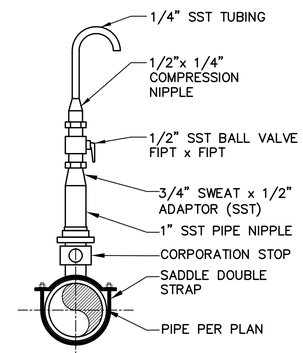

SAMPLE PORT (5 / VAR)

NOT TO SCALE

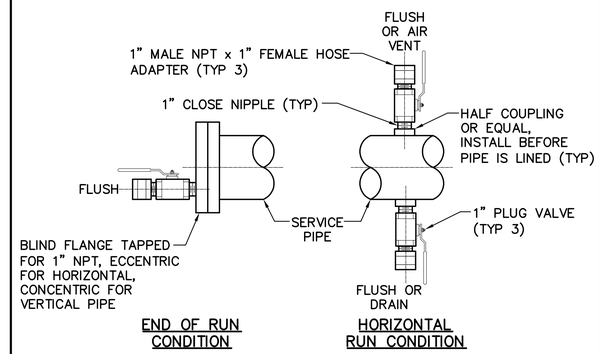

FLUSHING CONNECTION (6 / VAR)

NOT TO SCALE

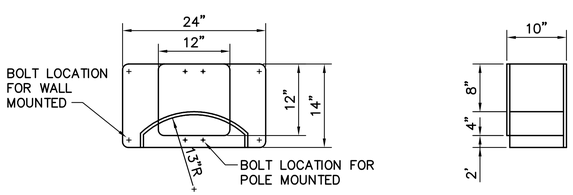

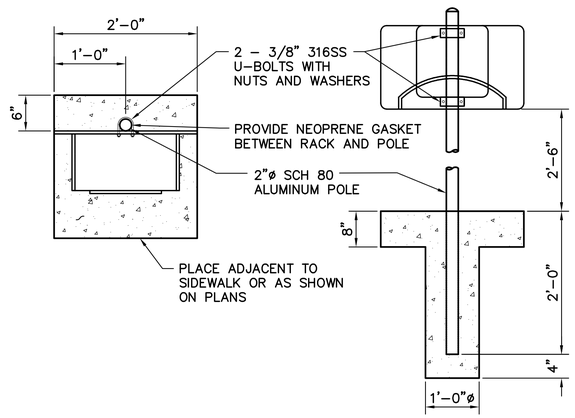

NOTES:

1. FABRICATE UNITS FROM 1/8" 6061–T6 ALUMINUM ALLOY PLATE. USE TYPE A U.O.N. ON DRAWINGS.

WALL MOUNTED – ATTACH TO CONCRETE WALL WITH 4 – 3/8" 316 SS EPOXY ANCHORS, 3 1/2" MIN. EMBEDMENT

POLE MOUNTED – INCLUDES POSTS, HANDRAILS, STANCHIONS, ETC. SEE BELOW (INCLUDES HANDRAIL MOUNTING)

HOSE RACK (2 / VAR)

NOT TO SCALE

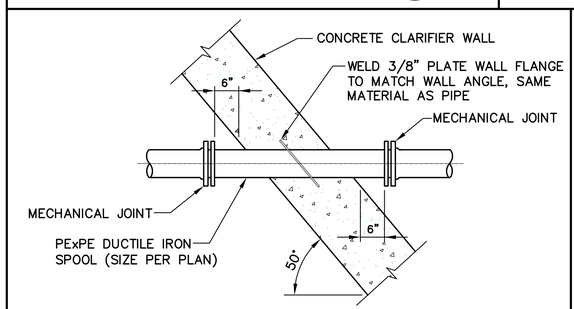

WALL PENETRATION W/ SEEP RING (7 / M–8)

NOT TO SCALE

RECORD DRAWING

THIS RECORD DRAWING IS NOT WARRANTED BUT IS BELIEVED TO REPRESENT CONDITIONS UPON COMPLETION OF CONSTRUCTION WITHIN REASONABLE TOLERANCES, BASED UPON THE INFORMATION FURNISHED TO THE ENGINEER PERTAINING TO CHANGES MADE DURING CONSTRUCTION.

REV	DESCRIPTION	ENGR	DATE	APPD	DATE
1	AS–BUILT	TF/MH	11/2012		

PROGRESS: RECORD DRAWINGS
SUBMITTAL DATE: 11/14/2012
PROJECT MANAGER: T. FALK
DESIGNED BY: K.L.B, A.E.G, M.D.H
DRAWN BY: K.K, C.S, N.H
CHECKED BY: S. DEERING

REGISTERED PROFESSIONAL ENGINEER – TOM C. FALK – No. 41780 Exp. 6/30/12 – CIVIL – STATE OF CALIFORNIA

PLANS PREPARED BY:
DUDEK
605 Third Street Encinitas, CA 92024
760.942.5147 Fax 760.942.4508

City of Guadalupe
Public Works Dept.
918 Obispo Street, Guadalupe, California 93434
Tel 805-356-3891 Fax 805-343-5512

WASTEWATER TREATMENT PLANT IMPROVEMENT PROJECT

MECHANICAL DETAILS 1

DWG. M-11
PROJECT NO. 6576
SHT. NO. 40 OF 50

P:\101.Engineering\Guadalupe, City of\6576–Wastewater Treatment Plant\6 Design Data\CAD6576\dwg\As–Builts 8–23–12\6576 SH40 M–11 11/14/2012 11:29 AM

PIPE SIZE (INCHES)	A (INCHES)	B* (INCHES)	C (INCHES)	D (INCHES)	E* (INCHES)	
					MIN.	MAX.
2 1/2	2 1/2	3 1/2	7 1/2	1 1/2	8	13
3	2 1/2	3 3/4	7 1/2	1 1/2	8 1/2	13 1/4
3 1/2	2 1/2	4	7 1/2	1 1/2	8 1/2	13 1/2
4	3	4 1/4	9	2 1/2	9 1/4	14
5	3	4 7/8	9	2 1/2	10	14 3/4
6	3	4 7/8	9	2 1/2	10 1/2	15 1/4
8	3	6 7/8	9	2 1/2	11 3/4	16 1/2
10	3	8 1/2	9	2 1/2	13 1/2	18 1/4
12	3	9 15/16	9	2 1/2	15	19 3/4
14	4	10 15/16	11	3	16 1/4	20 3/4
16	4	12 3/8	11	3	17 3/4	22 1/4
18	6	13 7/8	13 1/2	3 1/2	19 1/2	24
20	6	15 3/8	13 1/2	3 1/2	21	25 1/2
24	6	17 15/16	13 1/2	4	23 3/4	28 1/4

*DIMENSIONS GIVEN FOR REFERENCE ONLY. CONTRACTOR TO VERIFY ALL DIMENSIONS PRIOR TO INSTALLATION.

LEGEND

1. GALVANIZED U-BOLT, NUTS AND WASHER (SIZE PER PIPE SIZE)
2. PIPE SADDLE SUPPORT (TOLCO FIG 317, GRINNEL FIG 258, OR APPROVED EQUAL)
3. 5/8" STAINLESS STEEL WEDGE ANCHOR W/ STAINLESS STEEL LEVELING NUT AND WASHER, 5 1/2" MINIMUM EMBED (TYP)
4. 1 1/2" MINIMUM NON-SHRINK GROUT
5. HEIGHT TO BE DETERMINED IN FIELD
6. FLANGE SUPPORT (TOLCO FIG 314) OR APPROVED EQUAL
7. PIPE SADDLE W/ STEEL YOKE (TOLCO FIG 318, GRINNELL FIG 259, OR APPROVED EQUAL)
8. 3/8" THICK STEEL PLATE, SIZE PER TABLE
9. THREADED PIPE STAND (TOLCO FIG 316T OR APPROVED EQUAL), SIZE PER TABLE, SEE NOTES
10. THREADED PIPE WITH ADJUSTER (TOLCO FIG 319 OR APPROVED EQUAL), SIZE PER TABLE, SEE NOTES

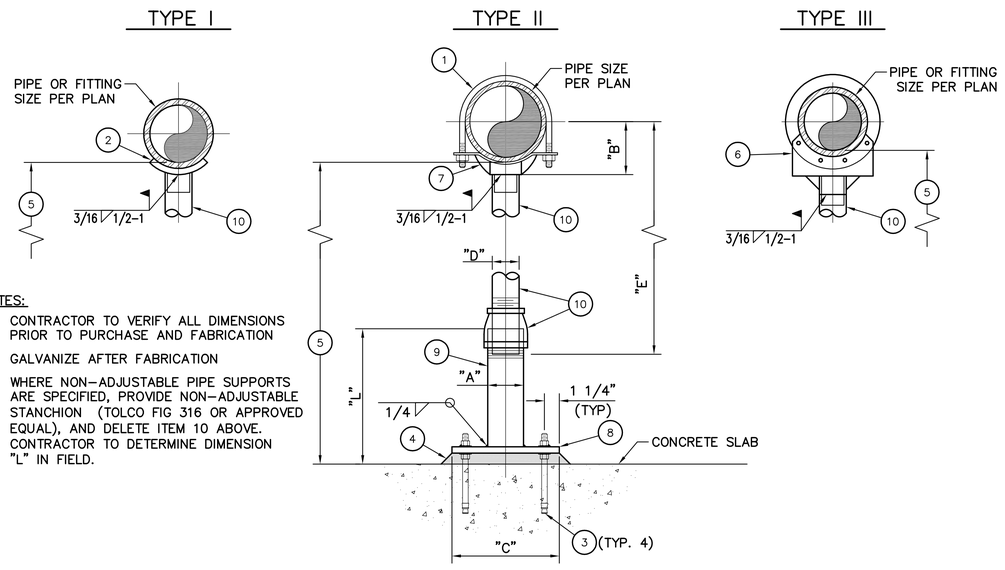

NOTES:

1. CONTRACTOR TO VERIFY ALL DIMENSIONS PRIOR TO PURCHASE AND FABRICATION
2. GALVANIZE AFTER FABRICATION
3. WHERE NON-ADJUSTABLE PIPE SUPPORTS ARE SPECIFIED, PROVIDE NON-ADJUSTABLE STANCHION (TOLCO FIG 316 OR APPROVED EQUAL), AND DELETE ITEM 10 ABOVE. CONTRACTOR TO DETERMINE DIMENSION "L" IN FIELD.

PIPE SUPPORT DETAIL 1 VAR

SCALE: 1 1/2" = 1'-0"

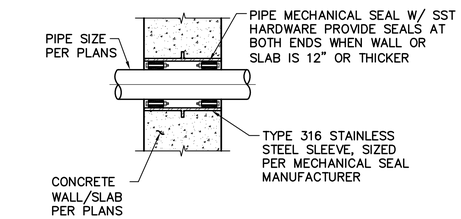

WALL/SLAB SLEEVE DETAIL 2 VAR

NOT TO SCALE

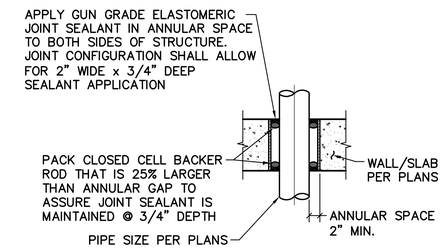

WALL/SLAB SLEEVE DETAIL 3 VAR

NOT TO SCALE

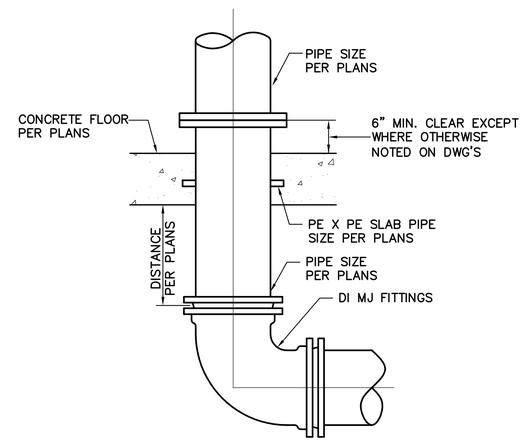

SLAB PIPE DETAIL 4 VAR

NOT TO SCALE

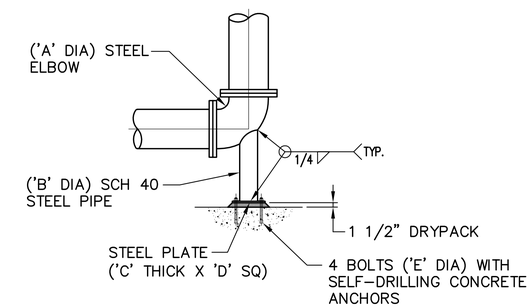

STEEL ELBOW

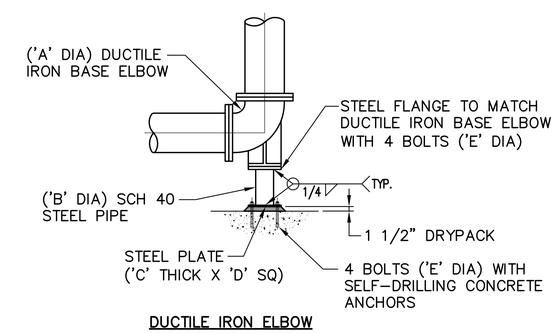

DUCTILE IRON ELBOW

ELBOW SUPPORT TABLE				
DIMENSION IN INCHES				
ELBOW 'A' DIA	B DIAMETER	C THICK	D SQUARE	E DIAMETER
4	2	3/8	6	5/8
6	2 1/2	3/8	7	5/8
8	4	1/2	9	5/8
10	4	1/2	9	5/8
12	6	1/2	11	3/4
14	6	1/2	11	3/4
16	6	1/2	11	3/4
18	8	1/2	13 1/2	3/4
20	8	1/2	13 1/2	3/4
24	8	1/2	13 1/2	3/4
30	10	3/4	16	7/8
36	12	3/4	19	7/8
42	16	3/4	23 1/2	1
48	18	3/4	25	1 1/8

ELBOW SUPPORT DETAIL 5 VAR

NOT TO SCALE

RECORD DRAWING

THIS RECORD DRAWING IS NOT WARRANTED BUT IS BELIEVED TO REPRESENT CONDITIONS UPON COMPLETION OF CONSTRUCTION WITHIN REASONABLE TOLERANCES, BASED UPON THE INFORMATION FURNISHED TO THE ENGINEER PERTAINING TO CHANGES MADE DURING CONSTRUCTION.

REV	DESCRIPTION	ENGR	DATE	APPD	DATE
1	AS-BUILT	TF/MH	11/2012		

PROGRESS: RECORD DRAWINGS
SUBMITTAL DATE: 11/14/2012
PROJECT MANAGER: T. FALK
DESIGNED BY: K.L.B, A.E.G, M.D.H
DRAWN BY: K.K, C.S, N.H
CHECKED BY: S. DEERING

REGISTERED PROFESSIONAL ENGINEER CIM C. FALK No. 61790 Exp. 6/30/12 CIVIL STATE OF CALIFORNIA

PLANS PREPARED BY:
DUDEK
605 Third Street Encinitas, CA 92024
760.942.5147 Fax 760.942.4508

City of Guadalupe
Public Works Dept.
918 Obispo Street, Guadalupe, California 93434
Tel 805-356-3891 Fax 805-343-5512

WASTEWATER TREATMENT PLANT IMPROVEMENT PROJECT

MECHANICAL DETAILS 2

DWG. M-12
PROJECT NO. 6576
SHT. NO. 41 OF 50

P:\101.Engineering\Guadalupe, City of\6576-Wastewater Treatment Plant\6 Design Data\CAD6576\dwg\As-Builts 8-23-12\6576 SH41 M-12 11/14/2012 11:29 AM

CONDUIT PLAN	SINGLE LINE DIAGRAM	SCHEMATIC DIAGRAM	DESCRIPTION
	50A 3P		CIRCUIT BREAKER. UPPER NUMBER IS TRIP RATING. LOWER NUMBER IS NUMBER OF POLES
■			THREE POSITION SWITCH. MAINTAINED CONTACT FUNCTION MAY VARY AS NOTED ON DIAGRAMS. CENTER POSITION IS OFF
■			TWO POSITION SWITCH. MAINTAINED CONTACT FUNCTION MAY VARY AS NOTED ON DIAGRAMS
■			MOMENTARY CONTACT PUSHBUTTON. FUNCTION MAY VARY AS NOTED ON DIAGRAMS
■ LOS		LOS	MOMENTARY CONTACT PUSHBUTTON WITH PROVISION FOR LOCKOUT.
			LOCKABLE DISCONNECT SWITCH. RATING AND DETAILS AS NOTED ON DRAWINGS.
■ ZS			LIMIT SWITCH. NORMALLY OPEN
■ ZS			LIMIT SWITCH. NORMALLY CLOSED
		NOTO	TIME DELAY RELAY CONTACT. OFF DELAY, NORMALLY OPEN, TIME OPEN
		NCTC	TIME DELAY RELAY CONTACT. OFF DELAY, NORMALLY CLOSED, TIME CLOSED
		NOTC	TIME DELAY RELAY CONTACT. ON DELAY, NORMALLY OPEN, TIME CLOSED
		NCTO	TIME DELAY RELAY CONTACT. ON DELAY, NORMALLY CLOSED, TIME OPEN
■ SOV			SOLENOID OPERATED VALVE
			MOTOR CONTROL CENTER DRAWOUT STABS
⊠	2		MOTOR STARTER WITH THERMAL OVERLOADS. NUMBER INDICATES NEMA SIZE
		OL	MOTOR OVERLOAD CONTACT
2	2	2	MOTOR, NUMBER INDICATES HORSEPOWER
			INDICATING LIGHT, PUSH-TO-TEST. LETTER INDICATES COLOR. R=RED B=BLUE G=GREEN A=AMBER W=WHITE
		M	CONTACTOR OR RELAY COIL. LETTER OR NUMBER IS DESIGNATION
		M	NORMALLY CLOSED CONTACT. LETTER OR NUMBER IS DESIGNATION
		M	NORMALLY OPEN CONTACT. LETTER OR NUMBER IS DESIGNATION
		RTM	RUNNING TIME METER, NON-RESETTABLE
	20A	5A	FUSE, NUMBER INDICATES RATING
			CONTROL TRANSFORMER. RATING AS NOTED ON DRAWINGS OR AS REQUIRED BASED ON LOAD SERVED.
	KW		KILOWATT METER
■ PS			PRESSURE SWITCH. CONTACT ACTION AS NOTED ON DRAWINGS

CONDUIT PLAN	SINGLE LINE DIAGRAM	SCHEMATIC DIAGRAM	DESCRIPTION
T			POWER TRANSFORMER. RATINGS AS NOTED ON DRAWINGS
			DUPLEX RECEPTACLE. 20A, SPEC GRADE GROUNDING TYPE. UNLESS OTHERWISE NOTED ON DRAWINGS.
			TELEPHONE OUTLET
J			JUNCTION BOX OR CONDUIT FITTING AS NOTED OR REQUIRED. (SHOWN WITH CONDUIT TURNING UP)
■ LS			LEVEL SWITCH, CONTACT ACTION AS NOTED ON DRAWINGS
			CONTROL PANEL OR EQUIPMENT AS NOTED
■ FS			FLOW SWITCH, CONTACT ACTION AS NOTED ON DRAWINGS
$			FLUSH TOGGLE SWITCH, SINGLE POLE, SINGLE THROW
$3			FLUSH TOGGLE SWITCH, THREE WAY
			FLUORESCENT FIXTURE. SEE LIGHTING SCHEDULE.
			LIGHTING FIXTURE, WALL MOUNTED SEE LIGHTING SCHEDULE
PB			MH-MANHOLE PB-PULLBOX HH-HANDHOLE OR AS NOTED ON DRAWINGS
T			TELEPHONE CONDUIT. SIZE AS NOTED
G			GROUNDING GRID OR GROUNDING CONDUCTOR SIZE AS REQUIRED OR AS NOTED ON DRAWINGS
G P			GROUND PIGTAIL. SIZE AS NOTED ON DRAWINGS
			EXOTHERMIC GROUND CONNECTION
			BOLTED GROUND CONNECTION
			CONDUIT BENDING UP
			CONDUIT BENDING DOWN
			UNDERGROUND OR CONCEALED CONDUIT, 1" MINIMUM
			EXPOSED CONDUIT, 3/4" MINIMUM.
PB1 1,3,5			HOMERUN CONDUIT WITH 3 CONDUCTORS, NEUTRAL AND GROUND, CIRCUITS 1,3,5 PANEL PB1, NO HASHMARKS INDICATE 2 CONDUCTORS AND GROUND
			DRIVEN GROUND ROD/TEST WELL 3/4" X 10' Cu CLAD STEEL
			PANELBOARD OR AS NOTED ON DRAWING
			LIQUIDTIGHT FLEXIBLE CONDUIT
XXX	XXX		CONDUIT NUMBER 'XXX', REFER TO CONDUIT SCHEDULE FOR DESCRIPTION

CONDUIT PLAN	SINGLE LINE DIAGRAM	SCHEMATIC DIAGRAM	DESCRIPTION
$M			MANUAL MOTOR STARTER
			GROUND
			HEATER, RATING AS NOTED ON DRAWING
			HORN OR AUDIBLE SIGNAL
Ø	Ø	Ø	PHASE
			TERMINAL, INTERNAL WIRING
			TERMINAL, FIELD WIRING
DS			INTRUSION (DOOR) SWITCH
			CONDUIT STUB OUT
F XX	XX		DISCONNECT SWITCH, F = FUSED NF = NON-FUSED XX = AMP RATING
		T	TELEMETRY INPUT POINT
		P	PLC INPUT POINT AT RTU

STANDARD ABBREVIATIONS

A	AMPERES
AC	ALTERNATING CURRENT
AF	AMPERE FRAME
AFC	ABOVE FINISHED CONCRETE
AFF	ABOVE FINISHED FLOOR
AFG	ABOVE FINISHED GRADE
AT	AMPERE TRIP
ATS	AUTOMATIC TRANSFER SWITCH
AUX	AUXILIARY
AUTO	AUTOMATIC
AWG	AMERICAN WIRE GAUGE
BC	BARE COPPER
BD	BOARD
BKR	BREAKER
C	CONDUIT
CAB	CABINET
CB	CIRCUIT BREAKER
CKT	CIRCUIT
CLG	CEILING
C.O.	CONDUIT ONLY
COMPT	COMPARTMENT
COND	CONDUCTOR
CONT	CONTROL
CONTD	CONTINUED
CPT	CONTROL POWER TRANSFORMER
CP	CONTROL PANEL
CT	CURRENT TRANSFORMER
CU	COPPER
CR	CONTROL RELAY
DC	DIRECT CURRENT
DISC	DISCONNECT
DISC SW	DISCONNECT SWITCH
DPDT	DOUBLE POLE DOUBLE THROW
DPST	DOUBLE POLE SINGLE THROW
DWG	DRAWING
DS	DOOR SWITCH
EL,ELEV	ELEVATION
EMT	ELECTRICAL METALLIC TUBING
EO	ELECTRICALLY OPERATED
EXIST	EXISTING
FBO	FURNISHED BY OWNER
FDR	FEEDER
FIN	FINISHED
FLA	FULL LOAD AMPS
FLEX	FLEXIBLE
FM	FLOW METER
FS	FLOW SWITCH
FT OR '	FEET OR FOOT
FT	FLOW TRANSMITTER
FUT	FUTURE
FVNR	FULL VOLTAGE NON REVERSING
GALV	GALVANIZED
GD	GAS DETECTORS
GFI	GROUND FAULT INTERRUPTER
GFP	GROUND FAULT PROTECTION
GND OR G	GROUND
HH	HANDHOLE
HOA	HAND/OFF/AUTO
HTR	HEATER
IC	INTERRUPTING CURRENT
IN OR "	INCHES OR INCH
IND	INDICATING
INST	INSTANTANEOUS
INSTR	INSTRUMENT
INTLK	INTERLOCK
JB OR J	JUNCTION BOX, CONDULET OR FITTING AS REQUIRED BY NEC. UNLESS OTHERWISE NOTED
KW	KILOWATTS
LCL	LONG CONTINUOUS LOAD
LCP	LOCAL CONTROL PANEL
LEV	LEVEL
LIM	LIMIT
LR	LOCAL/REMOTE
LOS	LOCKOUT STOP STATION
LS	LEVEL OR LIMIT SWITCH
LSIG	LONG TIME, SHORT TIME, INSTANTANEOUS AND GROUND FAULT ADJUSTMENTS
LT	LIGHT
LTG	LIGHTING
LV	LOW VOLTAGE
MA	MILLIAMPERE
MAINT	MAINTAINED
MAN	MANUAL
MAX	MAXIMUM
MC	MAINTAINED CONTACT
MCC	MOTOR CONTROL CENTER
MCM	THOUSAND CIRCULAR MILS
MCP	MOTOR CIRCUIT PROTECTOR
MH	MANHOLE
MIN	MINIMUM OR MINUTE
MLO	MAIN LUGS ONLY
MOV	MOTOR OPERATED VALVE ACTUATOR
MSB	MAIN SWITCHBOARD
MTG	MOUNTING
MTR	MOTOR
N	NEUTRAL
NA	NON-AUTOMATIC
NC	NORMALLY CLOSED
NCIO	NORMALLY CLOSED, INSTANTANEOUS OPEN
NCTC	NORMALLY CLOSED, TIME CLOSE
NCTO	NORMALLY CLOSE, TIME OPEN
NEC	NATIONAL ELECTRIC CODE
NIC	NOT IN CONTRACT
No	NUMBER
NO	NORMALLY OPEN
NOIC	NORMALLY OPEN, INSTANTANEOUS CLOSE
NOTC	NORMALLY OPEN, TIME CLOSE
NOTO	NORMALLY OPEN, TIME OPEN
NP	NAMEPLATE
NTS	NOT TO SCALE
OL	OVERLOAD
OTT	OVERTEMP SWITCH
PB	PUSHBUTTON
PB	PULLBOX
PC	PHOTOCELL
PCV	PUMP CONTROL VALVE
PMR	POWER MONITOR RELAY
PNL	PANEL
POS	POSITION
PR	PAIR
PRI	PRIMARY
PS	PRESSURE SWITCH
PT	POTENTIAL TRANSFORMER
PVC	POLYVINYL CHLORIDE
PVC/RGS	PVC JACKETED RIGID GALVANIZED STEEL CONDUIT
PW	PART WINDING
RECEP	RECEPTACLE
RCP	REMOTE CONTROL PANEL
RGS	RIGID GALVANIZED STEEL CONDUIT
RTU	REMOTE TERMINAL UNIT
RVAT	REDUCED VOLTAGE AUTO TRANSFORMER
RVYD	REDUCED VOLTAGE WYE DELTA
SCE	SOUTHERN CALIFORNIA EDISON
SEC	SECONDARY
SEL	SELECTOR
SP	SPARE
SPEC	SPECIFICATION
SPDT	SINGLE POLE DOUBLE THROW
SPST	SINGLE POLE SINGLE THROW
SS	STAINLESS STEEL
SSRV	SOLID STATE REDUCED VOLTAGE STARTER
ST	SHUNT TRIP
STA	STATION
STL	STEEL
STP	SHIELDED TWISTED PAIR
STR	STARTER
STT	SHIELDED TWISTED TRIPLET
SV	SOLENOID VALVE
SW	SWITCH
SWBD	SWITCHBOARD
TB	TERMINAL BOX
TCP	TELEMETRY CONTROL PANEL
TEL	TELEPHONE
TEMP	TEMPERATURE
TERM	TERMINAL
TM	TELEMETRY
TS	TEMPERATURE SWITCH
TS2W	TWO SPEED TWO WINDING
TVSS	TRANSIENT VOLTAGE SURGE SUPPRESSOR
TW/SH	TWISTED SHIELDED
TYP	TYPICAL
UG	UNDERGROUND
UON	UNLESS OTHERWISE NOTED
	VOLTS
W	WATTS
W/	WITH
W/O	WITHOUT
WP	WEATHERPROOF
XFMR	TRANSFORMER
XP	EXPLOSION PROOF
ZS	POSITION SWITCH OR LIMIT SWITCH
3W	THREE WIRE
4W	FOUR WIRE

MORAES/PHAM & ASSOCIATES
CONSULTING ELECTRICAL & MECHANICAL ENGINEERS
2131 PALOMAR AIRPORT RD., STE. 120
CARLSBAD CA. 92011
(760) 431-7177

RECORD DRAWING

THIS RECORD DRAWING IS NOT WARRANTED BUT IS BELIEVED TO REPRESENT CONDITIONS UPON COMPLETION OF CONSTRUCTION WITHIN REASONABLE TOLERANCES, BASED UPON THE INFORMATION FURNISHED TO THE ENGINEER PERTAINING TO CHANGES MADE DURING CONSTRUCTION.

REV	DESCRIPTION	ENGR	DATE	APPD	DATE
1	AS-BUILT	TF/MH	11/2012		

PROGRESS: RECORD DRAWINGS
SUBMITTAL DATE: 11/14/2012
PROJECT MANAGER: T. FALK
DESIGNED BY: J. MORAES
DRAWN BY: CAD
CHECKED BY: JMM

REGISTERED PROFESSIONAL ENGINEER JOSEPH M. MORAES No. E11023 Exp. 6/30/13 ELECTRICAL STATE OF CALIFORNIA

PLANS PREPARED BY:
DUDEK
605 Third Street Encinitas, CA 92024
760.942.5147 Fax 760.942.4508

City of Guadalupe Public Works Dept.
918 Obispo Street, Guadalupe, California 93434
Tel 805-356-3891 Fax 805-343-5512

WASTEWATER TREATMENT PLANT IMPROVEMENT PROJECT

STANDARD ELECTRICAL SYMBOLS AND ABBREVIATIONS

DWG. E-1
PROJECT NO. 6576
SHT. NO. 42 OF 50

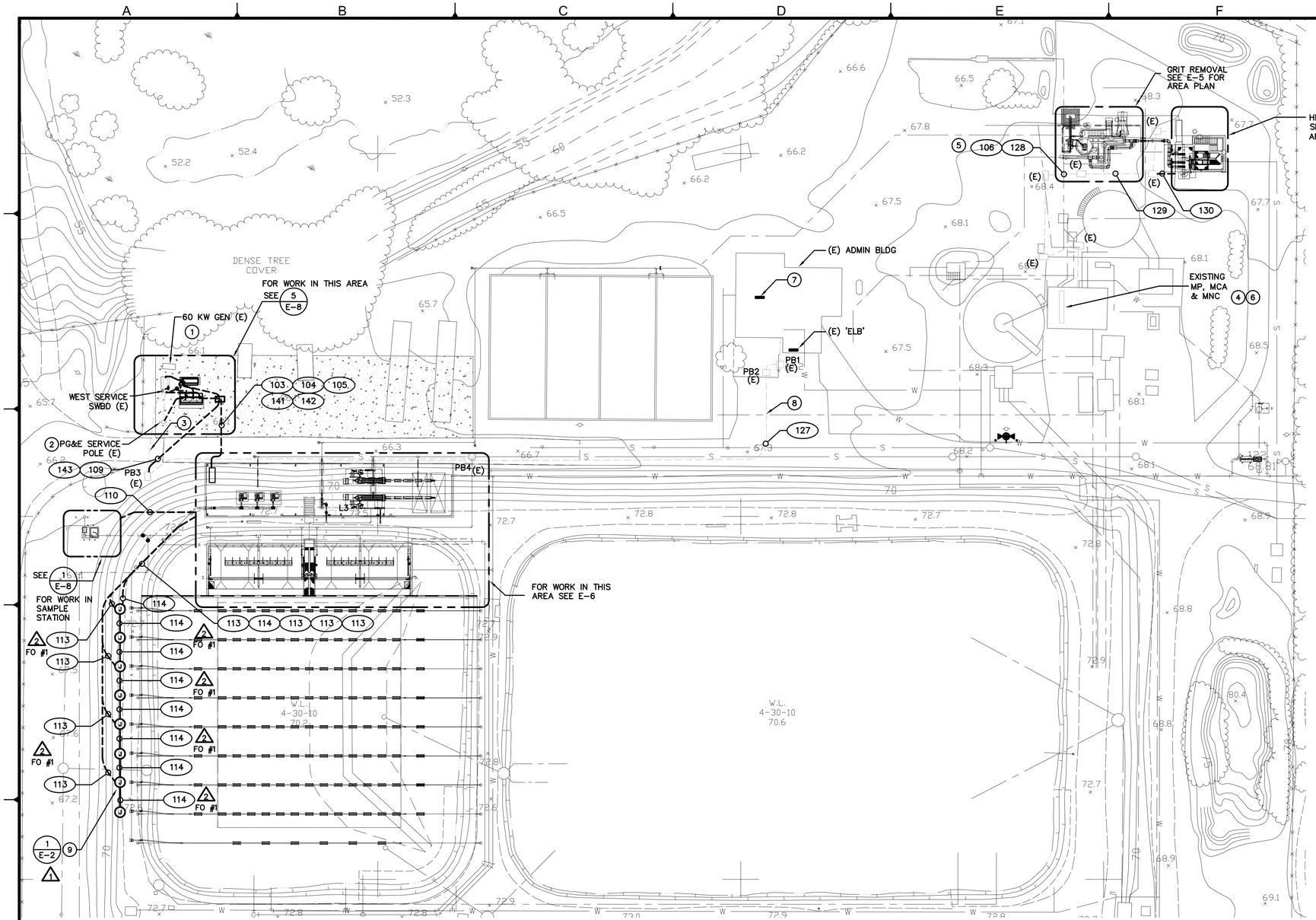

NOTES

1. REMOVE AND SALVAGE 60KW GENERATOR.
2. REROUTE 480V SERVICE TO NEW METER LOCATION. COORDINATE WITH PG&E.
3. EXISTING DUCT BANK. PROTECT IN PLACE.
4. ADD MCC BUCKET TO MCA. SEE SINGLE LINE DIAGRAM (E-3).
5. PULL NEW CONDUCTORS IN EXISTING CONDUITS TO MCA.
6. FIELD VERIFY AND UTILIZE EXISTING (ABANDONED) ALARM CONDUCTORS BETWEEN 'MCA' AND ADMIN ALARM PANEL. REFER TO P&ID'S FOR ALARM POINTS.
7. INSTALL AUTODIALER ADJACENT TO ALARM PANEL. POWER ANNUNCIATOR FROM LOCAL PANEL 'ELB'.
8. USE SPARE CONDUIT FOR ROUTING NEW ALARM SIGNALS TO ANNUNCIATOR.
9. AERATION MOTOR OPERATORS (QTY – 9). PROVIDE POWER JUNCTION BOX WITH 120 VAC MANUAL STARTER FOR EACH OPERATOR. PROVIDE JUNCTION BOX WITH DEVICENET TEE FOR EACH OPERATOR. PROVIDE (2) FLEX CONDUITS PER OPERATOR.
10. △1 PROVIDE 3' x3' x6"D CONCRETE SLAB.

NEW
(E) EXISTING
DEMO

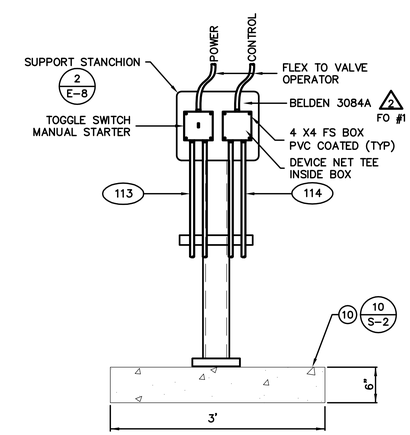

△1 STANCHION AT AERATION MOTOR OPERATORS 1 E-2
NTS

MORAES/PHAM & ASSOCIATES
CONSULTING ELECTRICAL & MECHANICAL ENGINEERS
2131 PALOMAR AIRPORT RD., STE. 120
CARLSBAD CA. 92011 (760) 431-7177

PLAN
SCALE: 1"=30'

GRAPHIC SCALE
0 30' 60'
SCALE: 1" = 30'

RECORD DRAWING
THIS RECORD DRAWING IS NOT WARRANTED BUT IS BELIEVED TO REPRESENT CONDITIONS UPON COMPLETION OF CONSTRUCTION WITHIN REASONABLE TOLERANCES, BASED UPON THE INFORMATION FURNISHED TO THE ENGINEER PERTAINING TO CHANGES MADE DURING CONSTRUCTION.

REV	DESCRIPTION	ENGR	DATE	APPD	DATE
△2	AS-BUILT	TF/MH	11/2012		
△1	ADDEMDUM No 2 – ADDED DETAIL	JM	8/8/11		

PROGRESS: RECORD DRAWINGS
SUBMITTAL DATE: 11/14/2012
PROJECT MANAGER: T. FALK
DESIGNED BY: J. MORAES
DRAWN BY: CAD
CHECKED BY: JMM

REGISTERED PROFESSIONAL ENGINEER JOSEPH M. MORAES No. E110235 Exp. 6/30/13 ELECTRICAL STATE OF CALIFORNIA

PLANS PREPARED BY:
DUDEK
605 Third Street Encinitas, CA 92024
760.942.5147 Fax 760.942.4508

City of Guadalupe
Public Works Dept.
918 Obispo Street, Guadalupe, California 93434
Tel 805-356-3891 Fax 805-343-5512

WASTEWATER TREATMENT PLANT IMPROVEMENT PROJECT

PARTIAL ELECTRICAL SITE PLAN

DWG. E-2
PROJECT NO. 6576
SHT. NO. 43 OF 50

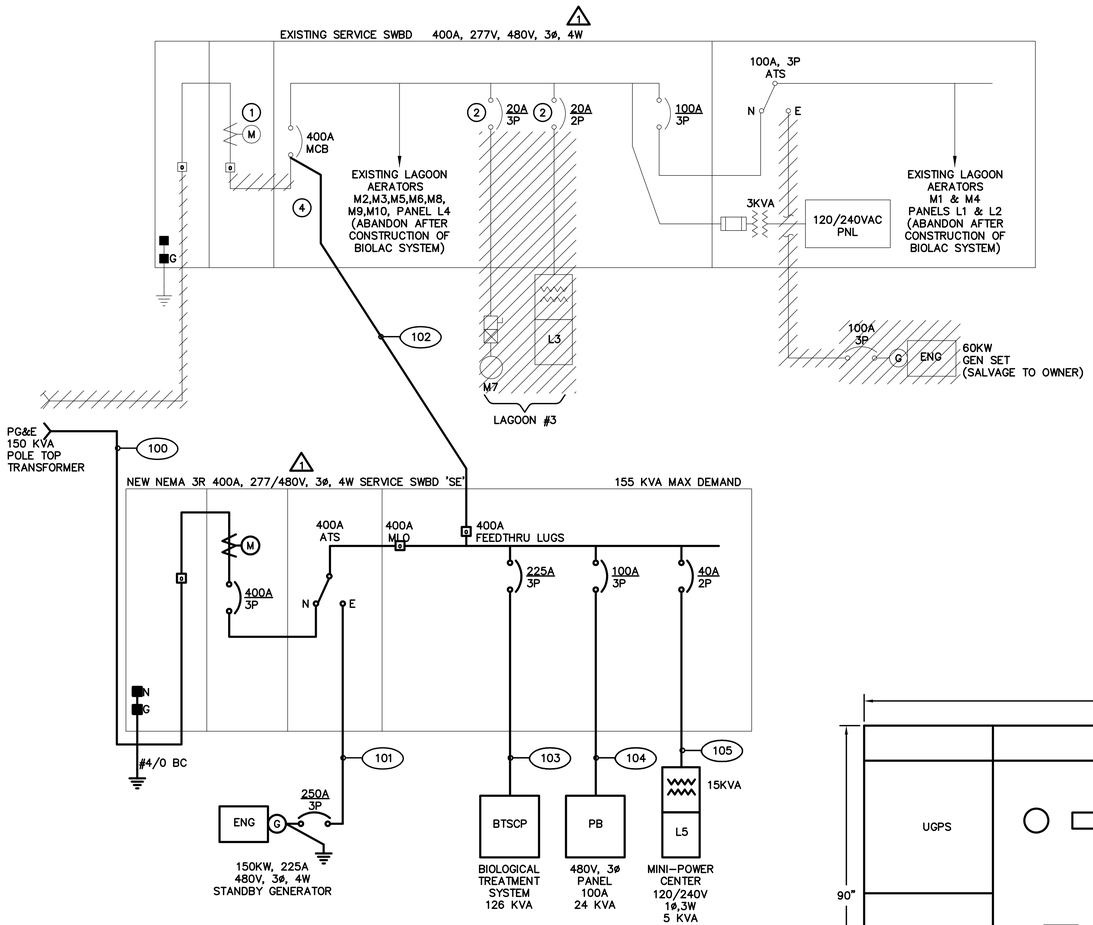

WEST SERVICE SINGLE LINE DIAGRAM

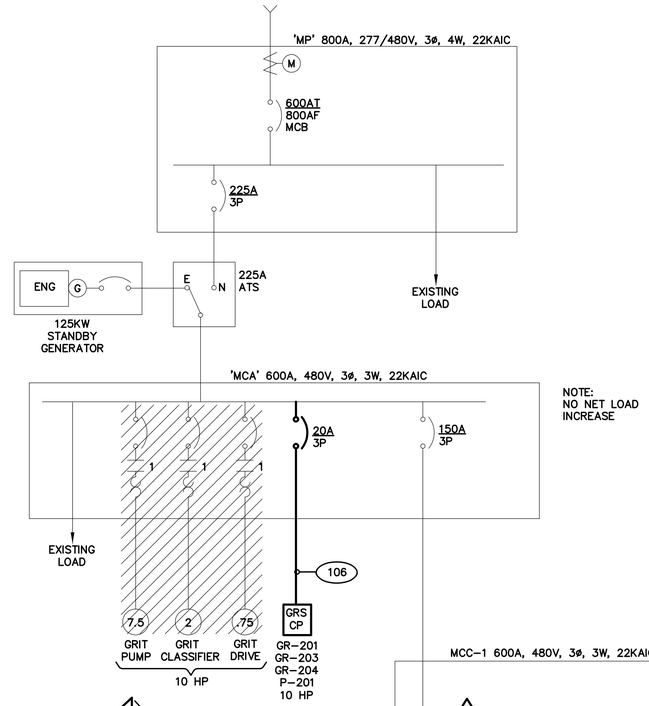

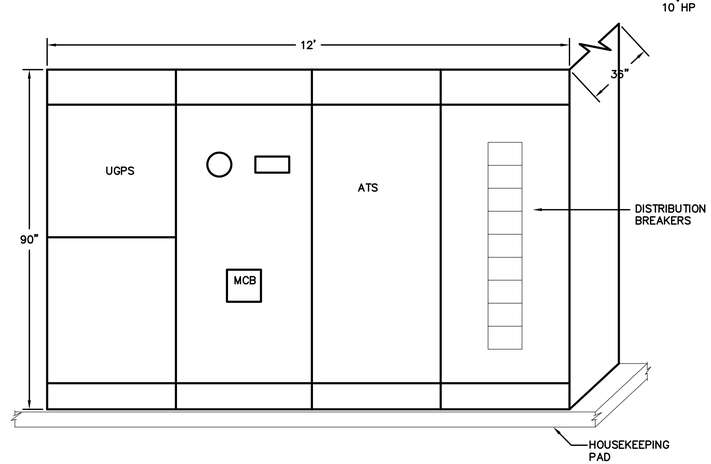

A E-3 'SE' ELEVATION
NEMA 3R NTS

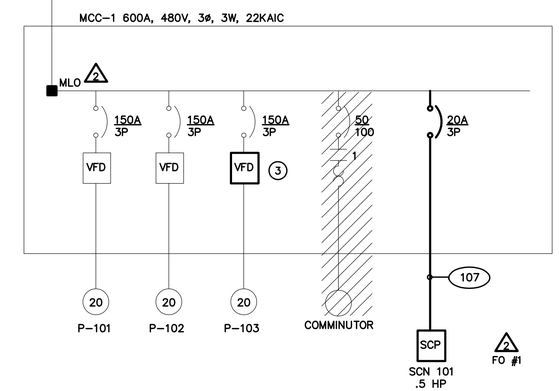

EAST SERVICE SINGLE LINE DIAGRAM

NOTES

1. SALVAGE METER TO PG&E.
2. RELABEL 'SPARE'.
3. REPLACE VFD.
4. ADD 400A LUGS TO EXISTING MCB.

EXISTING
NEW
DEMO

MORAES/PHAM & ASSOCIATES
CONSULTING ELECTRICAL & MECHANICAL ENGINEERS
2131 PALOMAR AIRPORT RD., STE. 120
CARLSBAD CA. 92011 (760) 431-7177

RECORD DRAWING

THIS RECORD DRAWING IS NOT WARRANTED BUT IS BELIEVED TO REPRESENT CONDITIONS UPON COMPLETION OF CONSTRUCTION WITHIN REASONABLE TOLERANCES, BASED UPON THE INFORMATION FURNISHED TO THE ENGINEER PERTAINING TO CHANGES MADE DURING CONSTRUCTION.

REV	DESCRIPTION	ENGR	DATE	APPD	DATE
2	AS-BUILT	TF/MH	11/2012		
1	ADDENDUM No. 1	JM	8/1/11		

PROGRESS: RECORD DRAWINGS
SUBMITTAL DATE: 11/14/2012
PROJECT MANAGER: T. FALK
DESIGNED BY: J. MORAES
DRAWN BY: CAD
CHECKED BY: JMM

REGISTERED PROFESSIONAL ENGINEER JOSEPH M. MORAES No. E110235 Exp. 6/30/13 ELECTRICAL STATE OF CALIFORNIA

PLANS PREPARED BY:
DUDEK
605 Third Street Encinitas, CA 92024
760.942.5147 Fax 760.942.4508

City of Guadalupe Public Works Dept.
918 Obispo Street, Guadalupe, California 93434
Tel 805-356-3891 Fax 805-343-5512

WASTEWATER TREATMENT PLANT IMPROVEMENT PROJECT

SINGLE LINE DIAGRAMS

DWG. E-3
PROJECT NO. 6576
SHT. NO. 44 OF 50

NOTES

1. DEMO COMMINUTOR AND ASSOCIATED LCP. REMOVE AND CAP CONDUITS. CLOSE OFF ALL CONDUIT PENETRATIONS.
2. ~~REMOVE EXISTING MFR CABLES BETWEEN WETWELL AND MCC. INSTALL NEW PUMP CABLES.~~ NOT IN CONTRACT 1
3. ADD TWO NEW MCC BUCKETS WITH 20A/3P BREAKER.
4. ~~FIELD VERIFY EXISTING CONTROLS AND INTERFACE. MATCH EXISTING.~~ NOT IN CONTRACT 1
5. SEE M-1 FOR MECHANICAL DEMO PLANS.
6. ~~REPLACE OBSCURED VIEWING WINDOW FOR LEVEL CONTROLLER AND PROVIDE UV PROTECTION COVER.~~ NOT IN CONTRACT 1
7. AREA BELOW GRADE IS CLASS 1, DIVISION 1 LOCATION. AREA 18" ABOVE GRADE WITHIN 3' ABOVE AND BEYOND PIT AND WETWELL IS CLASS 1, DIVISION 2 LOCATION. PROVIDE MATERIALS AND CONDUIT SEALS AS REQUIRED PER NEC ART 500.
8. ROUTE CONDUIT IN PIT ALONG WALL. PREVENT TRIP HAZARD.\
9. INTRINSICALLY SAFE CONDUITS. 1 FO #1

NEW
EXISTING
DEMO

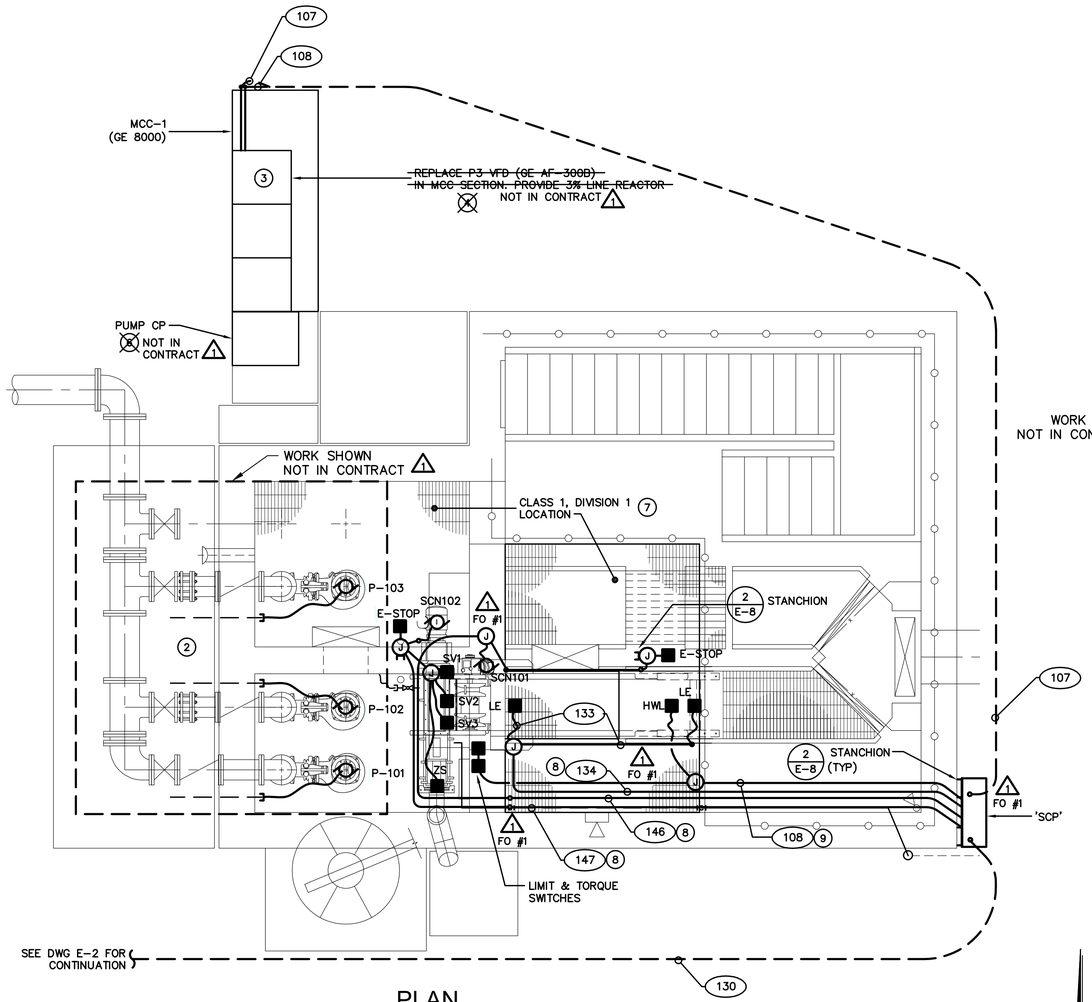

PLAN
SCALE: 3/8"=1'=0"

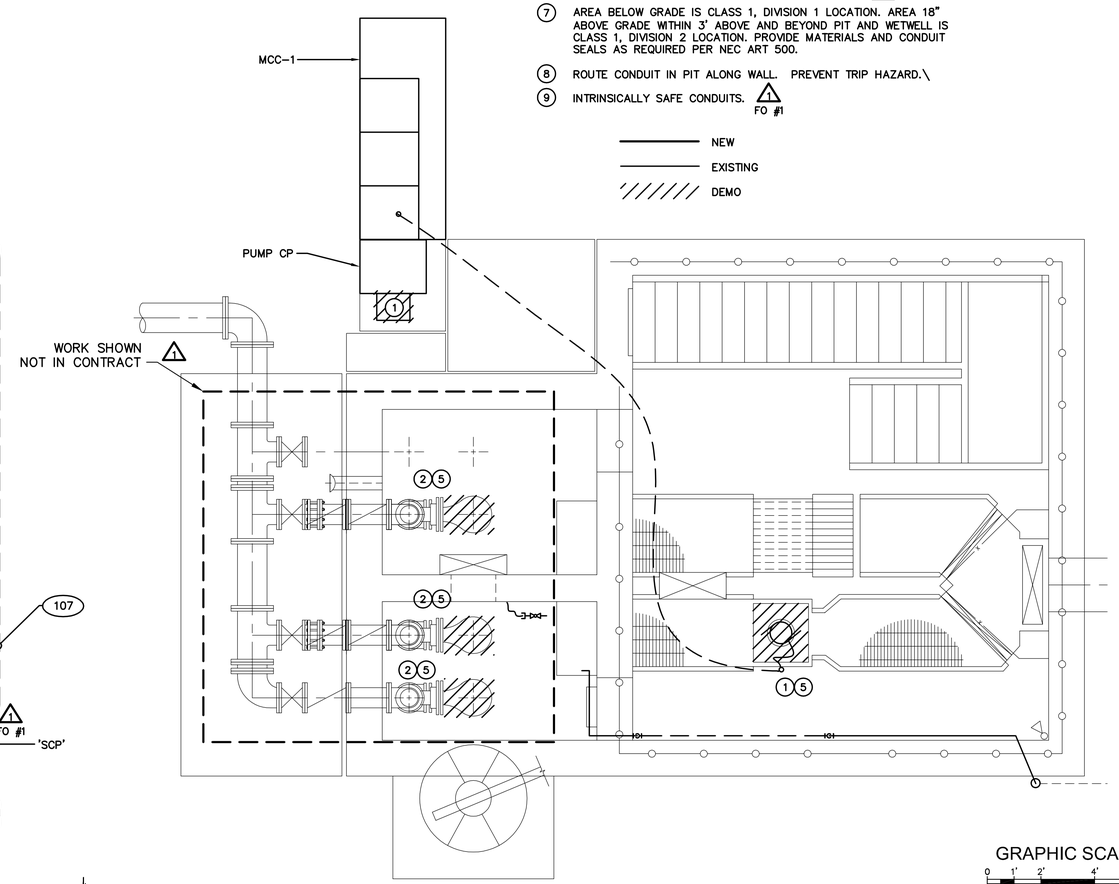

DEMOLITION DETAIL
SCALE: 3/8"=1'=0"

GRAPHIC SCALE
0 1' 2' 4' 6'
SCALE: 3/8"=1'-0"

RECORD DRAWING
THIS RECORD DRAWING IS NOT WARRANTED BUT IS BELIEVED TO REPRESENT CONDITIONS UPON COMPLETION OF CONSTRUCTION WITHIN REASONABLE TOLERANCES, BASED UPON THE INFORMATION FURNISHED TO THE ENGINEER PERTAINING TO CHANGES MADE DURING CONSTRUCTION.

MORAES/PHAM & ASSOCIATES
CONSULTING ELECTRICAL & MECHANICAL ENGINEERS
2131 PALOMAR AIRPORT RD., STE. 120
CARLSBAD CA. 92011 (760) 431-7177

REV	DESCRIPTION	ENGR	DATE	APPD	DATE
1	AS-BUILT	TF/MH	11/2012		

PROGRESS: RECORD DRAWINGS
SUBMITTAL DATE: 11/14/2012
PROJECT MANAGER: T. FALK
DESIGNED BY: J. MORAES
DRAWN BY: CAD
CHECKED BY: JMM

REGISTERED PROFESSIONAL ENGINEER JOSEPH M. MORAES No. E11023 Exp. 6/30/13 ELECTRICAL STATE OF CALIFORNIA

PLANS PREPARED BY:
DUDEK
605 Third Street Encinitas, CA 92024
760.942.5147 Fax 760.942.4508

City of Guadalupe
Public Works Dept.
918 Obispo Street, Guadalupe, California 93434
Tel 805-356-3891 Fax 805-343-5512

WASTEWATER TREATMENT PLANT IMPROVEMENT PROJECT

HEADWORKS
ELECTRICAL PLAN

DWG. E-4
PROJECT NO. 6576
SHT. NO. 45 OF 50

NOTES

1. UTILIZE EXISTING CONDUIT TO CONTINUE '106' TO 'MCA'.
2. SEE M-3 FOR MECHANICAL DEMO PLANS.
3. DISCONNECT AND RELOCATE FLOWMETER SENSOR. PROVIDE FLEX CONDUIT AND CORD AS REQUIRED. SEE M-4.
4. PROVIDE RAILING MOUNT FOR LOS.
5. REMOVE ALL CONDUCTORS BACK TO SOURCE. LABEL STARTERS & CIRCUITS AS 'SPARE'.
6. AREA WITHIN TANK AND AREA 18" ABOVE TANK AND WITHIN 10' OR TANK WALL AND WITHIN 10' RADIUS OF TANK TO 18" ABOVE GRADE IS CLASS 1, DIVISION 2 LOCATION. PROVIDE MATERIALS AND CONDUIT SEALS PER NEC ART 500.
7. BOTTOM OF LCP SHALL BE +24"AFF MINIMUM.
8. SEE DWG E-2 FOR CONTINUATION.

NOT IN CONTRACT △2

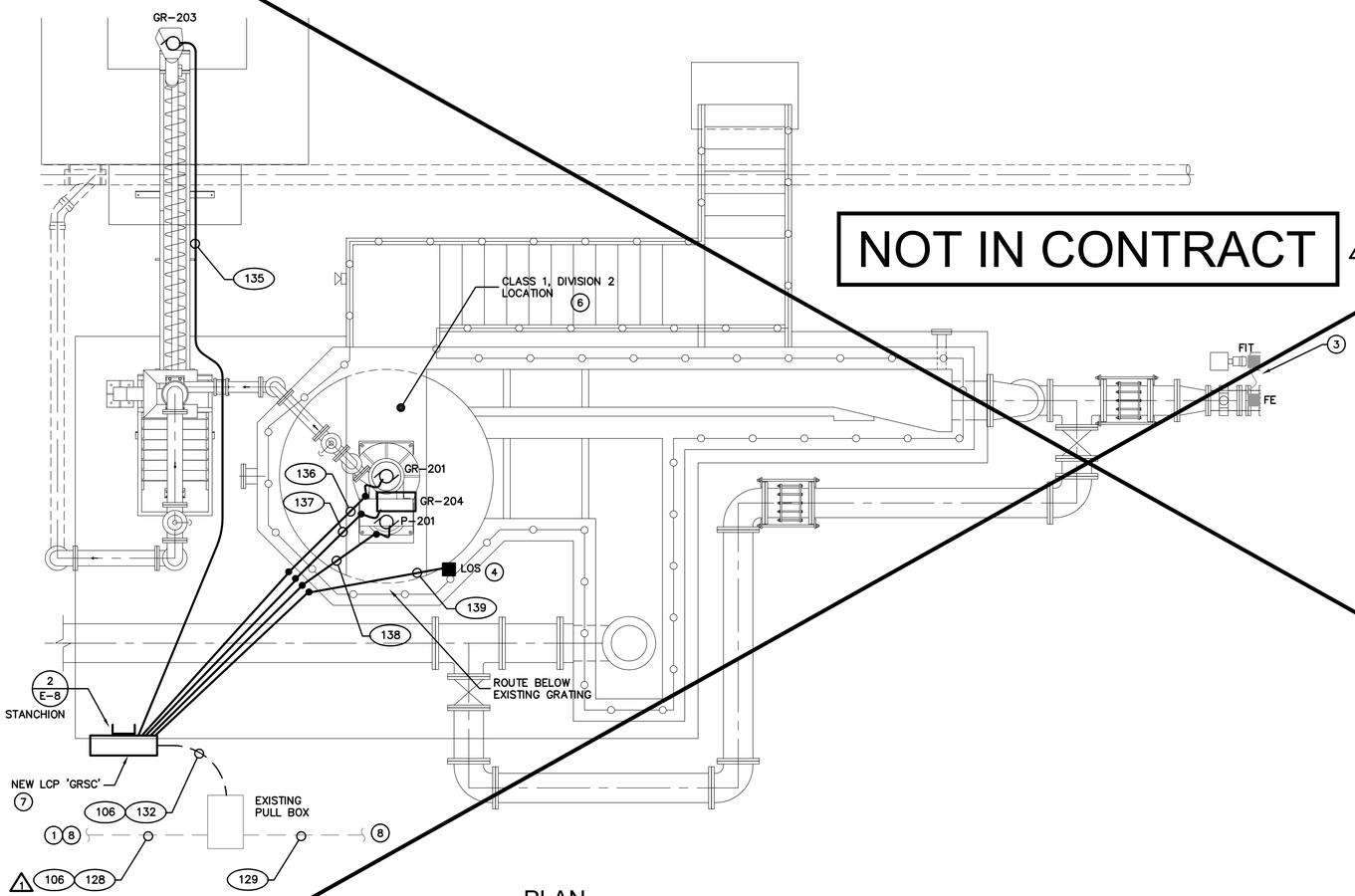

PLAN

SCALE: 3/8"=1'-0"

GRAPHIC SCALE

0 1' 2' 4' 6'

SCALE: 3/8"=1'-0"

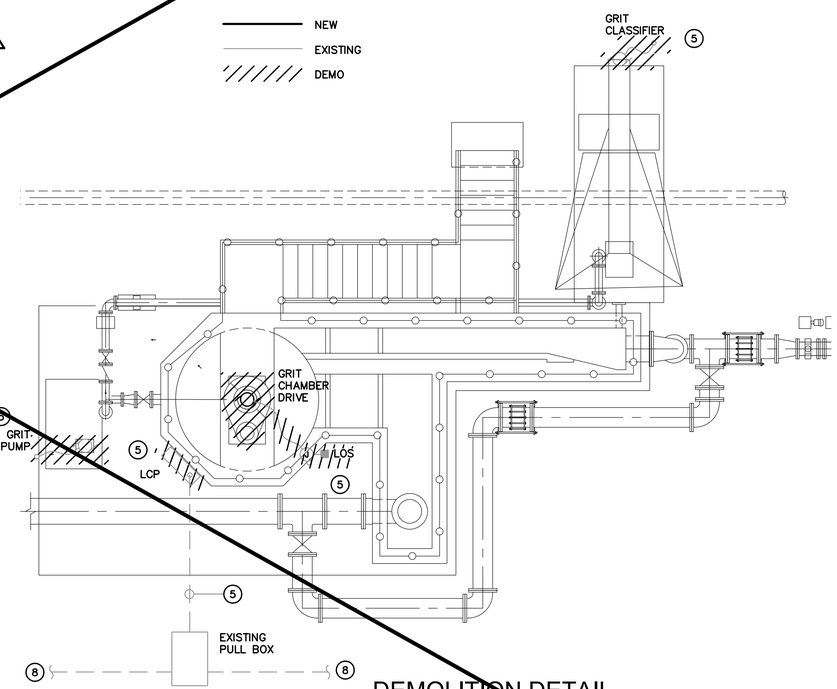

DEMOLITION DETAIL

SCALE: 1/4"=1'-0"

GRAPHIC SCALE

0 2' 4' 8'

SCALE: 1/4"=1'-0"

N

RECORD DRAWING

THIS RECORD DRAWING IS NOT WARRANTED BUT IS BELIEVED TO REPRESENT CONDITIONS UPON COMPLETION OF CONSTRUCTION WITHIN REASONABLE TOLERANCES, BASED UPON THE INFORMATION FURNISHED TO THE ENGINEER PERTAINING TO CHANGES MADE DURING CONSTRUCTION.

MPA MORAES/PHAM & ASSOCIATES
CONSULTING ELECTRICAL & MECHANICAL ENGINEERS
2131 PALOMAR AIRPORT RD., STE. 120
CARLSBAD CA. 92011 (760) 431-7177

REV	DESCRIPTION	ENGR	DATE	APPD	DATE
2	AS-BUILT	TF/MH	11/2012		
1	ADDENDUM No 2 – ADDED CONDUIT #106		8/5/11		

PROGRESS: RECORD DRAWINGS
SUBMITTAL DATE: 11/14/2012
PROJECT MANAGER: T. FALK
DESIGNED BY: J. MORAES
DRAWN BY: CAD
CHECKED BY: JMM

REGISTERED PROFESSIONAL ENGINEER JOSEPH M. MORAES No. E11023 Exp. 6/30/13 ELECTRICAL STATE OF CALIFORNIA

PLANS PREPARED BY:
DUDEK
605 Third Street Encinitas, CA 92024
760.942.5147 Fax 760.942.4508

City of Guadalupe Public Works Dept.
918 Obispo Street, Guadalupe, California 93434
Tel 805-356-3891 Fax 805-343-5512

WASTEWATER TREATMENT PLANT IMPROVEMENT PROJECT

GRIT REMOVAL ELECTRICAL PLAN

DWG. E-5
PROJECT NO. 6576
SHT. NO. 46 OF 50

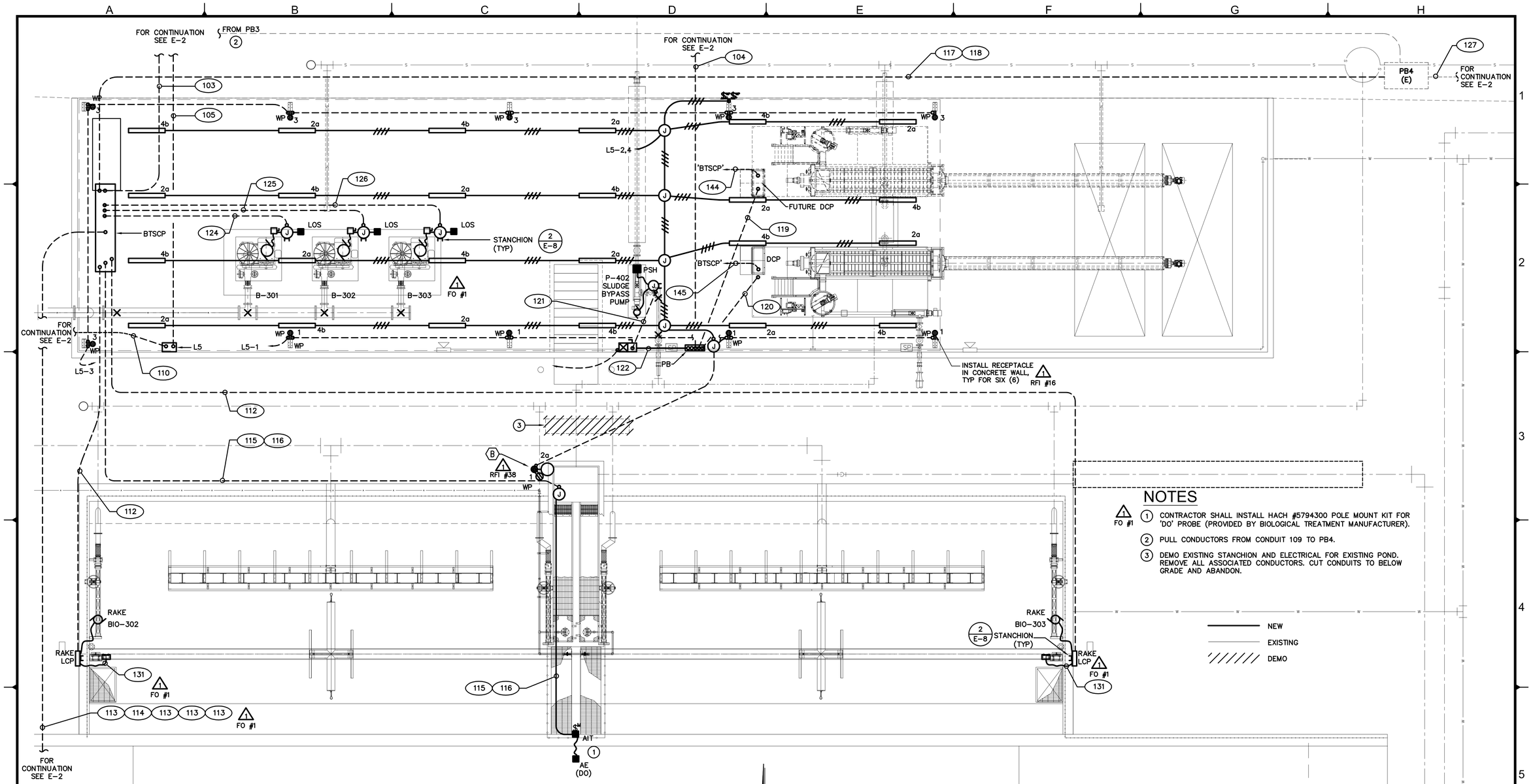

NOTES

FO #1

1. CONTRACTOR SHALL INSTALL HACH #5794300 POLE MOUNT KIT FOR 'DO' PROBE (PROVIDED BY BIOLOGICAL TREATMENT MANUFACTURER).
2. PULL CONDUCTORS FROM CONDUIT 109 TO PB4.
3. DEMO EXISTING STANCHION AND ELECTRICAL FOR EXISTING POND. REMOVE ALL ASSOCIATED CONDUCTORS. CUT CONDUITS TO BELOW GRADE AND ABANDON.

NEW
EXISTING
DEMO

MORAES/PHAM & ASSOCIATES
CONSULTING ELECTRICAL & MECHANICAL ENGINEERS
2131 PALOMAR AIRPORT RD., STE. 120
CARLSBAD CA. 92011 (760) 431-7177

GRAPHIC SCALE
0 2' 4' 8' 12'
SCALE: 3/16"=1'-0"

AREA PLAN 1 / M-5
SCALE: 3/16"-1'-0"

RECORD DRAWING
THIS RECORD DRAWING IS NOT WARRANTED BUT IS BELIEVED TO REPRESENT CONDITIONS UPON COMPLETION OF CONSTRUCTION WITHIN REASONABLE TOLERANCES, BASED UPON THE INFORMATION FURNISHED TO THE ENGINEER PERTAINING TO CHANGES MADE DURING CONSTRUCTION.

REV	DESCRIPTION	ENGR	DATE	APPD	DATE
1	AS-BUILT	TF/MH	11/2012		

PROGRESS: RECORD DRAWINGS
SUBMITTAL DATE: 11/14/2012
PROJECT MANAGER: T. FALK
DESIGNED BY: J. MORAES
DRAWN BY: CAD
CHECKED BY: JMM

REGISTERED PROFESSIONAL ENGINEER JOSEPH M. MORAES No. E110235 Exp. 6/30/13 ELECTRICAL STATE OF CALIFORNIA

PLANS PREPARED BY:
DUDEK
605 Third Street Encinitas, CA 92024
760.942.5147 Fax 760.942.4508

City of Guadalupe Public Works Dept.
918 Obispo Street, Guadalupe, California 93434
Tel 805-356-3891 Fax 805-343-5512

WASTEWATER TREATMENT PLANT IMPROVEMENT PROJECT

AERATION AND SLUDGE DEWATERING ELECTRICAL PLANS

DWG. E-6
PROJECT NO. 6576
SHT. NO. 47 OF 50

CONDUIT NO.	CONDUIT SIZE	FROM	TO	CABLE QTY.	CABLE SIZE	CABLE GND.*	VOLTAGE		REMARKS
100	4"	PG&E	SERVICE SWBD 'SE'				480	POWER	PER PG&E REQUIREMENTS
101	3"	GENERATOR	SERVICE SWBD 'SE' (ATS)	3	#250 KCMIL	#4	480	POWER	
102	3"	SERVICE SWBD 'SE'	EXISTING SWBD	3	#500 KCMIL	#3	480	POWER	
103	3"	SERVICE SWBD 'SE'	'BTSCP'	3	#250 KCMIL	#4	480	POWER	
104	1.5"	SERVICE SWBD 'SE'	'PB'	3	#2	#8	480	POWER	
105	1"	SERVICE SWBD 'SE'	'L5'	2	#6	#10	480	POWER	
106	1"	'MCA'	'GRS-CP'	3	#10	#10	480	POWER	USE EXISTING CONDUIT
				2	#14	#14	120	CONTROL	ALARM
107	1"	'MCC-1'	'SCP'	3	#10	#10	480	POWER	
					1 FO #1			1 FO #1	
108	3/4"	'SCP' 1 FO #1	'SCN-101' 1 FO #1	6	FO #1 #14	–	–	CONTROL	INTRINSIC CKTS 1 FO #1
109	(2)2"	SERVICE SWBD 'SE'	PB3	–	–	–	480	POWER	SPARE CONDUITS
110	1"	'L-5'	FIT & SAMPLER	2	#10	#10	120	POWER	L5-5
111	1"	FIT	FE-1 & FE-2	2	COAX	–	–	SIGNAL	MFR CABLES
112	1"	'BTSCP'	RAKE	3	#12	#12	480	POWER	
				3	#14	#14	120	CONTROL	
113	1"	'BTSCP'	AERATION BASIN VALVES 1 FO #1	4	#10	#10	120	POWER	
114	1"	'BTSCP'	AERATION BASIN VALVES	1	CABLE	–	–	COMM	(DEVICENET) BELDEN 3082A 1 FO #1
115	1"	'BTSCP'	AIT	2	#12	#12	120	POWER	
116	1"	'BTSCP'	AIT	1	#18STP	–	24	SIGNAL	
117	1"	'BTSCP'	PB4	–	–	–	–	–	SPARE CONDUIT
118	1"	'BTSCP'	PB4	7	#14	#14	120	CONTROL	ANNUNCIATOR ALARMS
119	1"	FUTURE DCP	'PB'	–	–	–	480	POWER	C.O.
					1 FO #1				
120	1"	DCP	'PB'	3	#6	#10	480	POWER	
121	1"	STARTER	P-402	3	#12	#12	480	POWER	
				6	#14	#14	120	CONTROL	
122	1"	'PB'	STARTER	3	#12	#12	480	POWER	
123	1'	STARTER	'BTSCP'	–	–	–	120	CONTROL	C.O.
124	1 1/4"	B-301	'BTSCP'	3	#2	#6	480	POWER	
			FO #1 1	6	#14	#14	120	CONTROL	
125	1 1/4"	B-302	'BTSCP'	3	#2	#6	480	POWER	
			FO #1 1	6	#14	#14	120	CONTROL	
126	1 1/4"	B-303	'BTSCP'	3	#2	#6	480	POWER	
				8	#14	#14	120	CONTROL	
127	1"	PB4	ADMIN ANNUNCIATOR	10	#14	#14	120	CONTROL	USE EXISTING CONDUITS (ANNUNCIATOR)
128	1"	PB	'MCA'	4	#14	#14	120	CONTROL	EXISTING CONDUIT TO 'MCA'
129	1"	PB	PB	3	#14	#14	120	CONTROL	EXISTING CONDUIT TO 'MCA'
130	1"	'SCP' 1 FO #1	PB	2	#14	#14	120	CONTROL	ALARMS TO ANNUNCIATOR 'MCA'
				1 FO #1					
131	3/4"	'RAKE LCP' 1 FO #1	'J-BOX' 1 FO #1	8	#14	#14	120	CONTROL	1 FO #1
132	1"	'GRSC'	PB	2	#14	#14	120	CONTROL	ALARM TO ANNUNCIATOR 'MCA'

* – ONE GROUND CONDUCTOR PER CONDUIT

MORAES/PHAM & ASSOCIATES
CONSULTING ELECTRICAL & MECHANICAL ENGINEERS
2131 PALOMAR AIRPORT RD., STE. 120
CARLSBAD CA. 92011 (760) 431-7177

CONDUIT NO.	CONDUIT SIZE	FROM	TO	CABLE QTY.	CABLE SIZE	CABLE GND.*	VOLTAGE		REMARKS
133	3/4"	'SCP'	LE	1	MFR CABLE	–	–	SIGNAL	
134	1-1/2"	'SCP'	J-BOX	2	MFR CABLES	–	–	SIGNAL	LEVELS
135	3/4"	'GRSC'	GR-203	3	#12	#12	480	POWER	
				2	#14	#14	120	CONTROL	
136	3/4"	'GRSC'	GR-201	3	#12	#12	480	POWER	
				2	#14	#14	120	CONTROL	
137	3/4"	'GRSC'	GR-204	10	#14	#14	120	CONTROL	
138	3/4"	'GRSC'	P-201	3	#12	#12	480	POWER	
				2	#14	#14	120	CONTROL	
139	3/4"	'GRSC'	LOS	2	#14	#14	120	CONTROL	
140	1"	SERVICE SWBD 'ATS'	GENERATOR	2	#14	#14	–	CONTROL	START/STOP
141	1"	'L5'	SERVICE SWBD 'SE'	2	#10	#10	120	POWER	L5-6
142	1"	'L5'	GENERATOR	2	#8	#8	120	POWER	L5-8
143	1"	PB	ADMIN ANNUNCIATOR	3	#12	#12	120	CONTROL	USE EXISTING DUCT BANK
144	1"	'BTSCP'	FUTURE DCP	–	–	–	120	CONTROL	C,O.
145	1"	'BTSCP'	DCP	2	#14	#14	120	CONTROL	
146	1"	'SCP'	SCN-101	3	#12	#12	480	POWER	
			FO #1 1	6	#14	#14	120	CONTROL	
147	1"	'SCP' 1 FO #1	SCN-102	3	#12	#12	480	POWER	
			FO #1 1	12	#14	#14	120	CONTROL	

PANEL 'PB'

MOUNTING SURFACE NEMA 3R — 480 VOLT — 3 PHASE — 3 WIRE — MAIN 100A — 22,000 A.I.C. SYM. — BUS 100A

LOCATION	WATTAGE ØA	WATTAGE ØB	WATTAGE ØC	REC	LTG	POLE	BKR	CKT NO.	ØA ØB ØC	CKT NO.	BKR	POLE	LTG	REC	WATTAGE ØA	WATTAGE ØB	WATTAGE ØC	LOCATION
SLUDGE DEWATERING	10500	1 FO #1				3	60	1		2								
SKID		10500	1 FO #1			–	–	3		4								
			10500			–	–	5		6								
SPARE (FUTURE SKID)			1 FO #1			3	60	7		8								
						–	–	9		10								
						–	–	11		12								
P-402 SLDG BYPASS	1400					3	20	13		14								
PUMP		1400				–	–	15		16								
			1400			–	–	17		18								
								19		20								
								21		22								
								23		24								
	11900	11900	11900	1 FO #1					WATTS/LINE									

ØA= 11900 1 FO #1 — ØB= 11900 1 FO #1 — FO #1 1 ØC= 11900

TOTAL WATTS= 35700 — AMPS/LINE= 43 — LCL AMPS=

PANEL L5

MOUNTING SURFACE NEMA 1 — 120/240 VOLT — 1 PHASE — 3 WIRE — MAIN 80A MCB — 10000 A.I.C. SYM. — BUS 100A Cu

LOCATION	WATTAGE ØA	WATTAGE ØB	REC	LTG	POLE	BKR	CKT NO.	ØA ØB	CKT NO.	BKR	POLE	LTG	REC	WATTAGE ØA	WATTAGE ØB	LOCATION
RECPT	1080		6		1	20	1		2	20	1	13		1277		LTS
RECPT		900	6		1	20	3		4	20	1	12			1152	LTS
SAMPLER	200				1	20	5		6	20	1			500		SWBD LTS/RECEPT/HTR
							7		8	20	1				2400	GENERATOR CHGR/HTR
							9		10							
							11		12							
							13		14							
							15		16							
							17		18							
	1280	900						WATTS/LINE						1777	3552	

ØA= 3057 — ØB= 4452

TOTAL WATTS= 7509 — AMPS/LINE= 32 — LCL AMPS=

RECORD DRAWING

THIS RECORD DRAWING IS NOT WARRANTED BUT IS BELIEVED TO REPRESENT CONDITIONS UPON COMPLETION OF CONSTRUCTION WITHIN REASONABLE TOLERANCES, BASED UPON THE INFORMATION FURNISHED TO THE ENGINEER PERTAINING TO CHANGES MADE DURING CONSTRUCTION.

REV	DESCRIPTION	ENGR	DATE	APPD	DATE
1	AS-BUILT	TF/MH	11/2012		

PROGRESS: RECORD DRAWINGS
SUBMITTAL DATE: 11/14/2012
PROJECT MANAGER: T. FALK
DESIGNED BY: J. MORAES
DRAWN BY: CAD
CHECKED BY: JMM

REGISTERED PROFESSIONAL ENGINEER JOSEPH M. MORAES No. E11023 Exp. 6/30/13 ELECTRICAL STATE OF CALIFORNIA

PLANS PREPARED BY:
DUDEK
605 Third Street Encinitas, CA 92024
760.942.5147 Fax 760.942.4508

City of Guadalupe
Public Works Dept.
918 Obispo Street, Guadalupe, California 93434
Tel 805-356-3891 Fax 805-343-5512

WASTEWATER TREATMENT PLANT IMPROVEMENT PROJECT

SCHEDULES

DWG. E-7
PROJECT NO. 6576
SHT. NO. 48 OF 50

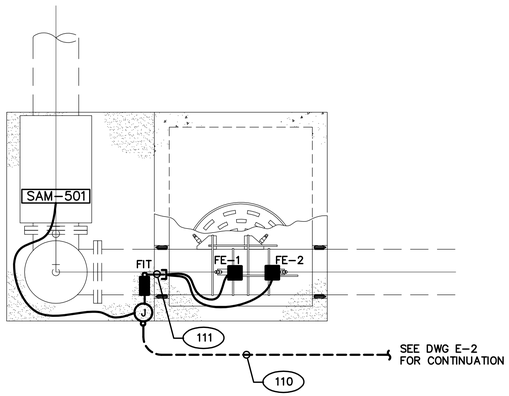

SAMPLER AREA 1 / E-8
SCALE: 1/2"=1'-0"

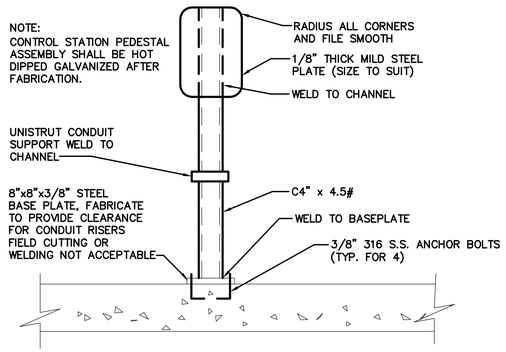

STANCHION 2 / E-8
NTS

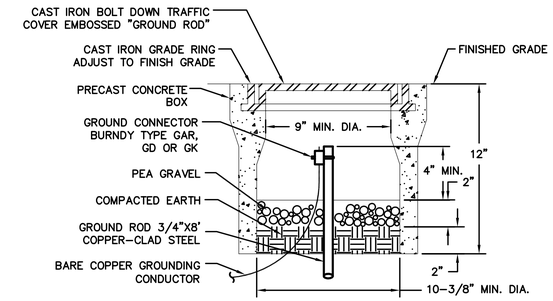

GROUND ROD AND BOX INSTALLATION 3 / E-8
NTS

NOTES

1. REMOVE AND SALVAGE 60KW GENERATOR.
2. REROUTE 480V SERVICE TO NEW METER LOCATION. COORDINATE WITH PG&E.
3. EXISTING DUCT BANK. PROTECT IN PLACE.
4. BOND #4/0 BC GROUND TO EXISTING GROUND GRID.

NEW
(E) EXISTING
DEMO

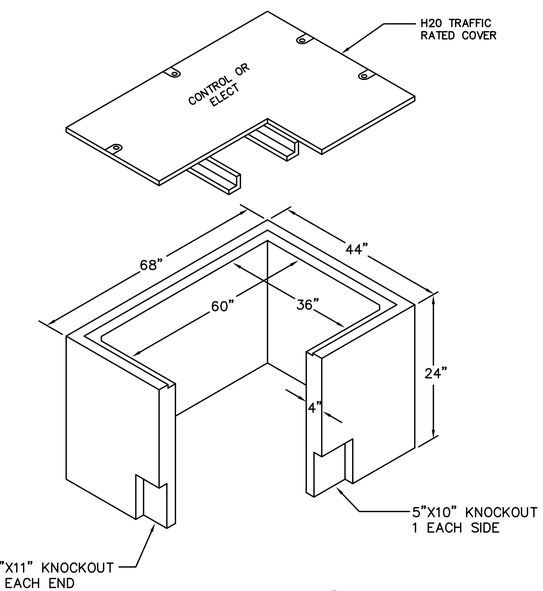

3' x 5' PULLBOX 4 / E-8
NTS

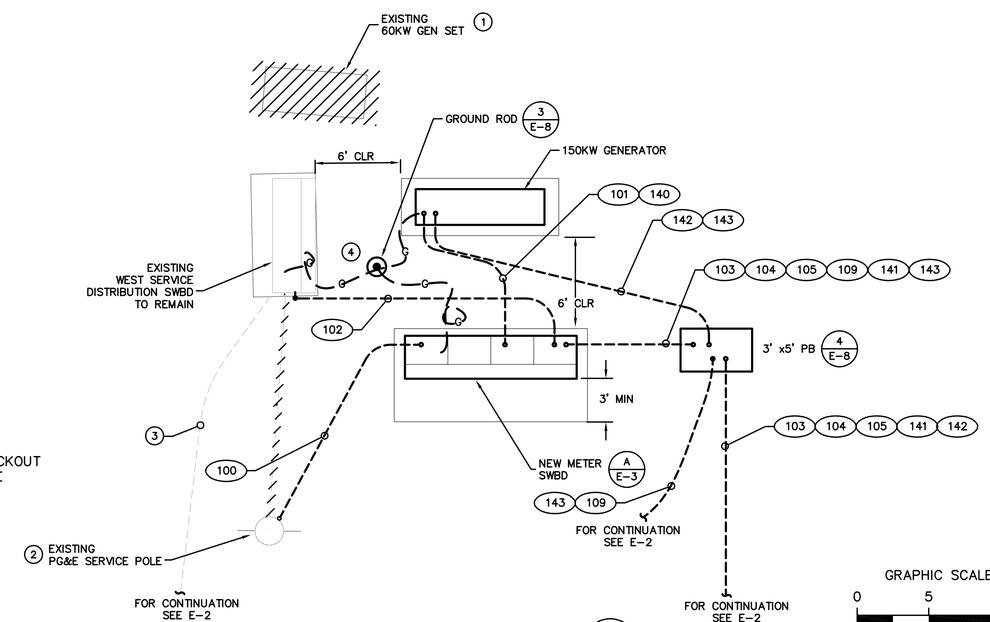

NEW AREA DETAIL 5 / E-8
SCALE: 1"=5'

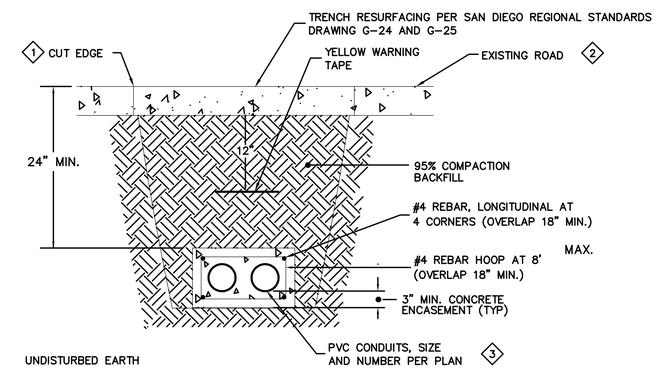

DUCT BANK CROSS SECTION 6 / E-8
NTS

1. SAWCUT EXISTING SURFACE, SAW CUT TO BE STRAIGHT AND FULL DEPTH.
2. TACK COAT TO CUT EDGE. CUT TO BE 1" BEYOND EDGE OF PIT
3. REFER TO SPECIFICATIONS FOR CONDUIT REQUIREMENTS AND SEPARATION.

GRAPHIC SCALE (FEET) 0 5 10 15
SCALE: 1"=5'

GRAPHIC SCALE (FEET) 0 2 4 6
SCALE: 1/2"=1'-0"

RECORD DRAWING
THIS RECORD DRAWING IS NOT WARRANTED BUT IS BELIEVED TO REPRESENT CONDITIONS UPON COMPLETION OF CONSTRUCTION WITHIN REASONABLE TOLERANCES, BASED UPON THE INFORMATION FURNISHED TO THE ENGINEER PERTAINING TO CHANGES MADE DURING CONSTRUCTION.

MORAES/PHAM & ASSOCIATES
CONSULTING ELECTRICAL & MECHANICAL ENGINEERS
2131 PALOMAR AIRPORT RD., STE. 120
CARLSBAD CA. 92011 (760) 431-7177

REV	DESCRIPTION	ENGR	DATE	APPD	DATE
1	AS-BUILT	TF/MH	11/2012		

PROGRESS: RECORD DRAWINGS
SUBMITTAL DATE: 11/14/2012
PROJECT MANAGER: T. FALK
DESIGNED BY: J. MORAES
DRAWN BY: CAD
CHECKED BY: JMM

REGISTERED PROFESSIONAL ENGINEER JOSEPH M. MORAES No. E11023 Exp. 6/30/13 ELECTRICAL STATE OF CALIFORNIA

PLANS PREPARED BY:
DUDEK
605 Third Street Encinitas, CA 92024
760.942.5147 Fax 760.942.4508

City of Guadalupe Public Works Dept.
918 Obispo Street, Guadalupe, California 93434
Tel 805-356-3891 Fax 805-343-5512

WASTEWATER TREATMENT PLANT IMPROVEMENT PROJECT

DETAILS

DWG. E-8
PROJECT NO. 6576
SHT. NO. 49 OF 50

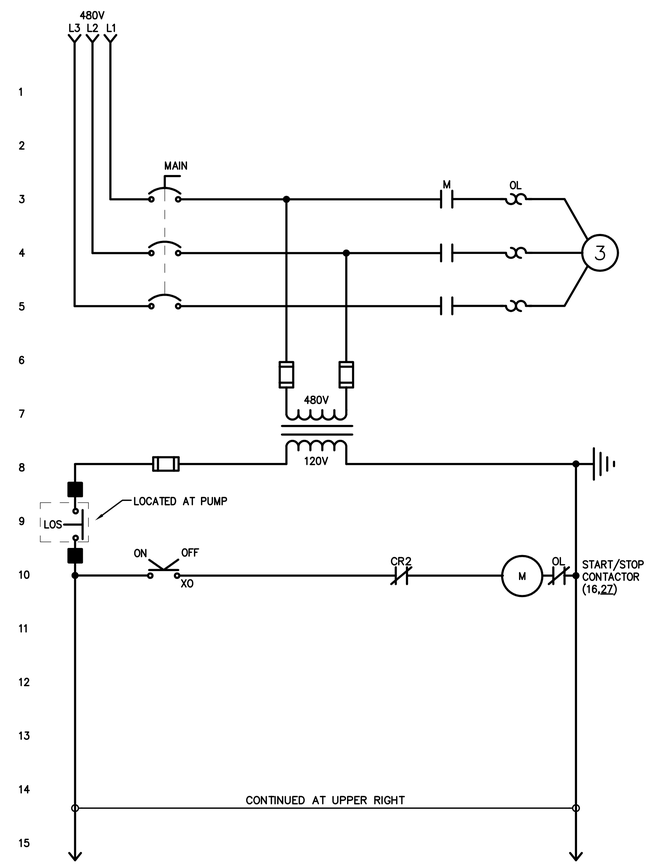

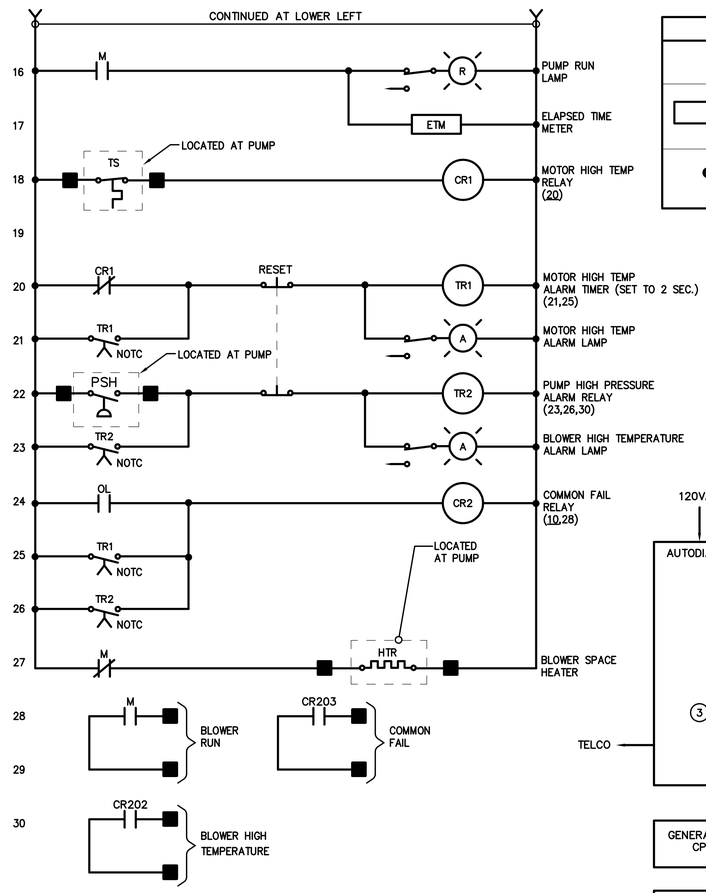

SLUDGE BYPASS PUMP P-402

LIGHTING FIXTURE SCHEDULE

SYMBOL	TAG	DESCRIPTION	FIXTURE WATTS / VOLTAGE	LAMP TYPE NO. OF LAMPS / WATTS	MOUNTING	MANUFACTURER CATALOG NO.
	A	4' FLUORESCENT FIXTURE, REINFORCED POLYESTER HOUSING, IMPACT RESISTANT, UV RESISTANT ACRYLIC DIFFUSER, FULLY GASKETED, ELECTRONIC BALLAST UL WET LOCATION.	72W 120VAC	FLUORESCENT (2) 32W T8	CEILING	COLUMBIA LIGHTING LUN4-232-E120-DR
	B	AREA/ROADWAY FIXTURE. TAMPERPROOF MOUNTING HARDWARE. UL LISTED. CONTRACTOR TO PROVIDE ALL NECESSARY HARDWARE FOR MOUNTING.INCLUDE LAMP AND WP RECEPTACLE	125W 120VAC	HIGH PRESSURE SODIUM (1) (100W)	POLE	SPAULDING CR1-A-S10-H3-F-T-DB-PR1 SSS-10-40-1-TA-DB-Q18 (10' POLE)

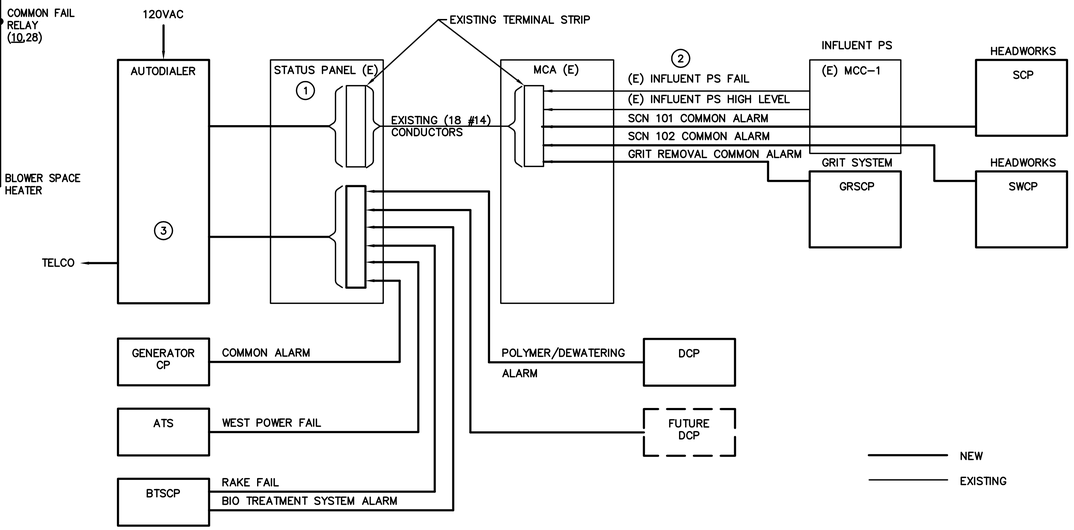

ANNUNCIATOR BLOCK DIAGRAM

NOTES

1. EXISTING PANEL. INDICATORS TO BE ABANDONED.
2. USE EXISTING ABANDONED CONDUCTORS. FIELD LOCATE AND VERIFY.
3. VERBATIM VSS AUTODIALER WITH 16 DI OPTION.

RECORD DRAWING

THIS RECORD DRAWING IS NOT WARRANTED BUT IS BELIEVED TO REPRESENT CONDITIONS UPON COMPLETION OF CONSTRUCTION WITHIN REASONABLE TOLERANCES, BASED UPON THE INFORMATION FURNISHED TO THE ENGINEER PERTAINING TO CHANGES MADE DURING CONSTRUCTION.

MORAES/PHAM & ASSOCIATES
CONSULTING ELECTRICAL & MECHANICAL ENGINEERS
2131 PALOMAR AIRPORT RD., STE. 120
CARLSBAD CA. 92011 (760) 431-7177

REV	DESCRIPTION	ENGR	DATE	APPD	DATE
1	AS-BUILT	TF/MH	11/2012		

PROGRESS: RECORD DRAWINGS
SUBMITTAL DATE: 11/14/2012
PROJECT MANAGER: T. FALK
DESIGNED BY: J. MORAES
DRAWN BY: CAD
CHECKED BY: JMM

REGISTERED PROFESSIONAL ENGINEER JOSEPH M. MORAES No. E11023 Exp. 6/30/13 ELECTRICAL STATE OF CALIFORNIA

PLANS PREPARED BY:
DUDEK
605 Third Street Encinitas, CA 92024
760.942.5147 Fax 760.942.4508

City of Guadalupe Public Works Dept.
918 Obispo Street, Guadalupe, California 93434
Tel 805-356-3891 Fax 805-343-5512

WASTEWATER TREATMENT PLANT IMPROVEMENT PROJECT

CONTROLS/SCHEDULES

DWG. E-9
PROJECT NO. 6576
SHT. NO. 50 OF 50