Hi-Desert Water District, Water Reclamation Facility Preliminary Design Report, Volume 2 – Drawings, January 2009

Att7_IG2_TechJust_4of8

Hi- Desert Water District

Hi-Desert Water Reclamation Facility
Preliminary Design Report

Volume 2 – Drawings

January 5, 2009

MWH

DWG NO.	DESCRIPTION
00-1	PROPERTY PLAN
00-2	SITE PLAN
00-3	HYDRAULIC PROFILE
00-4	PROPOSED BORING LOCATIONS
00-5	YARD PIPING
01-1	PAXTON PUMP STATION PLAN AND SECTION
01-2	PAXTON PUMP STATION SITE PLAN
02-1	HEADWORKS - PLAN
03-1	OXIDATION DITCH - PLAN
04-1	SECONDARDY CLARIFIER - PLAN
04-2	MIXED LIQUOR SPLITTER BOX - PLAN
05-1	RAS/WAS PUMP STATION - PLAN
06-1	FILTERS - PLAN
07-1	UV SYSTEM AND UTILITY WATER PUMP STATION - PLAN
10-1	SOLIDS HANDLING BUILDING - PLAN
11-1	PLANT DRAIN PUMP STATION - PLAN
12-1	BIOFILTER - PLAN
13-1	OPERATIONS BUILDING - PLAN
14-1	GENERATOR - PLAN

File: DWG 00 List of Drawings.dgn Model: Default ColorTable: bw.ctb DesignScript: MWH_Iplot_Pentable_v85.pen PlotScale: 1:1 User: sjmunger Plot Date: 05-JAN-2009 11:55

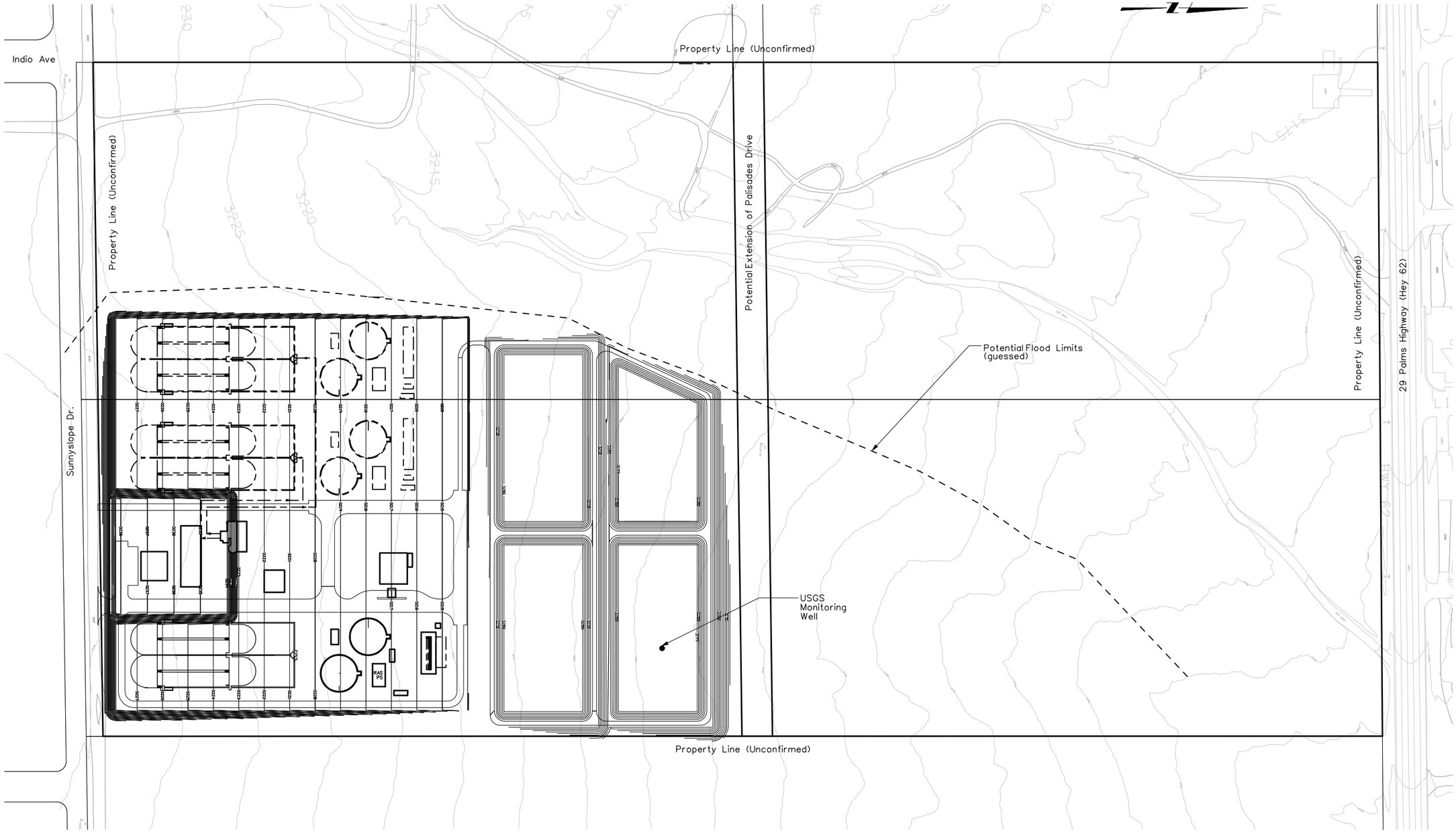

SCALE				DRAWING
1"=200'	MWH Pasadena California	Hi-Desert Water Reclamation Facility Preliminary Design Report	PROPERTY PLAN	00-1

File: DWG 00-1 Property Plan.dgn Model: Default ColorTable: bw.ctb DesignScript: MWH_Iplot_Pentable_v85.pen PlotScale: 200:1 User: sjmunger Plot Date: 05-JAN-2009 11:55

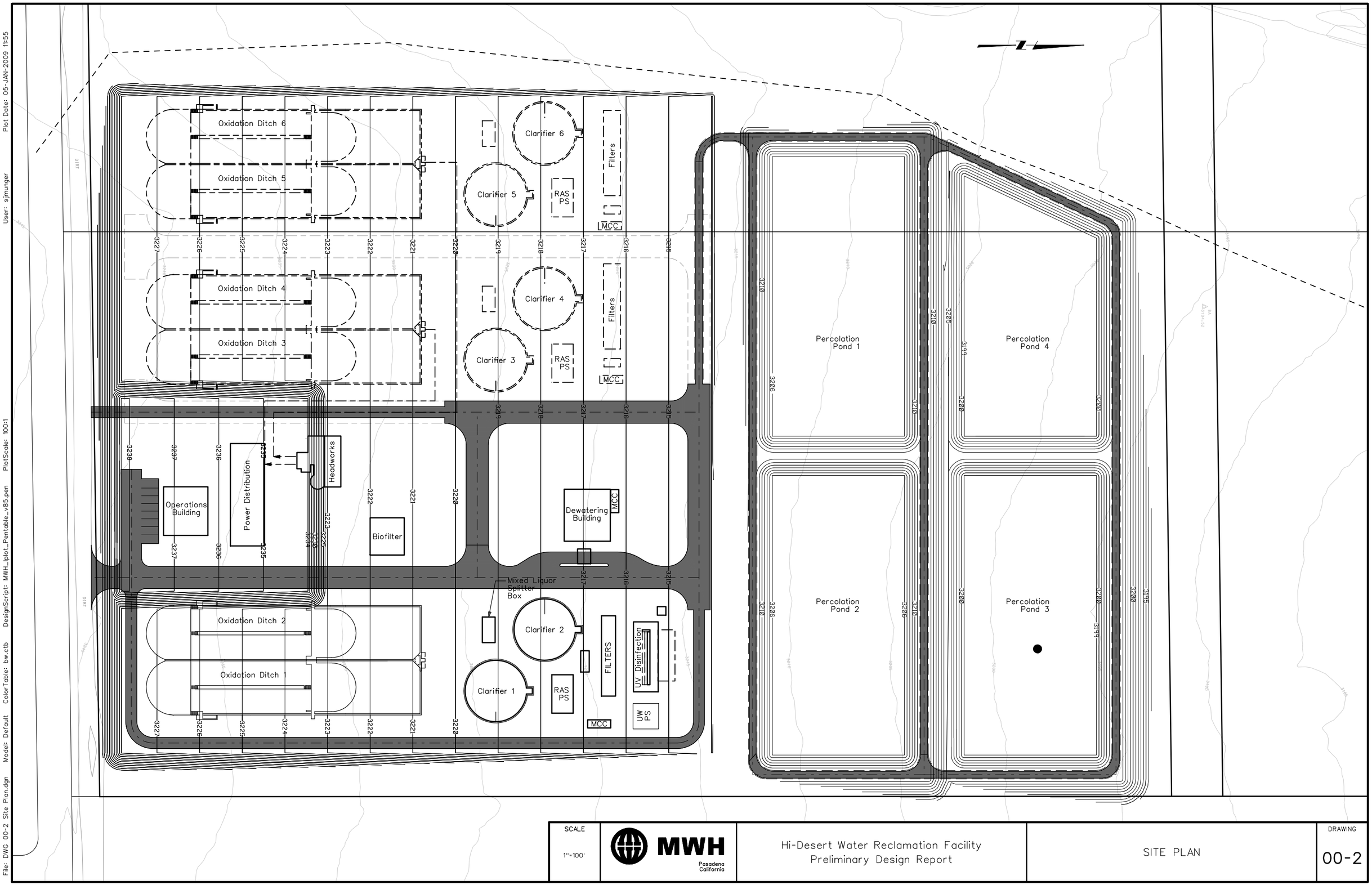

SCALE			DRAWING
1"=100'	MWH Pasadena California	Hi-Desert Water Reclamation Facility Preliminary Design Report	SITE PLAN	00-2

File: DWG 00-2 Site Plan.dgn Model: Default ColorTable: bw.ctb DesignScript: MWH_Iplot_Pentable_v85.pen PlotScale: 100:1 User: sjmunger Plot Date: 05-JAN-2009 11:55

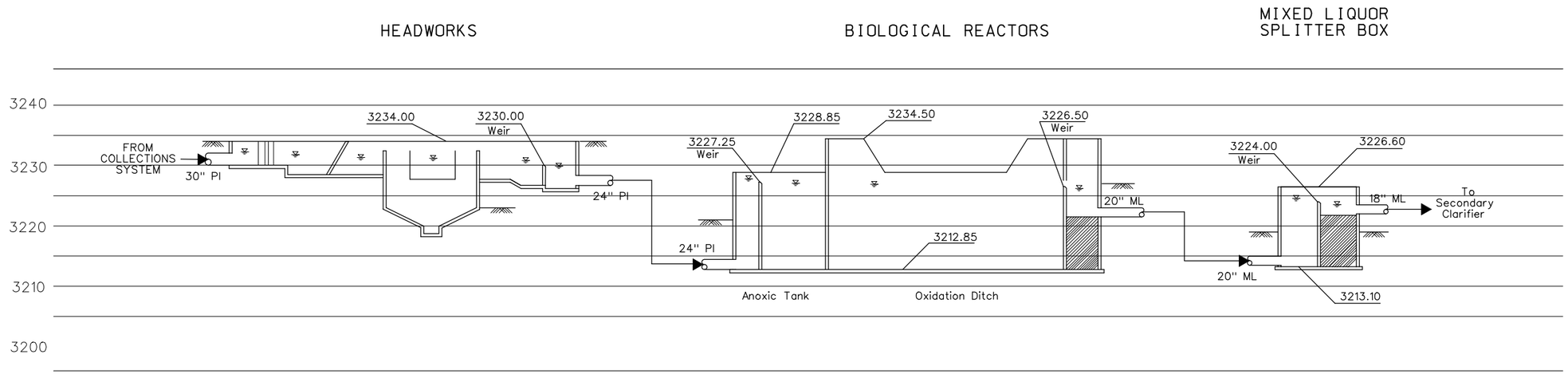

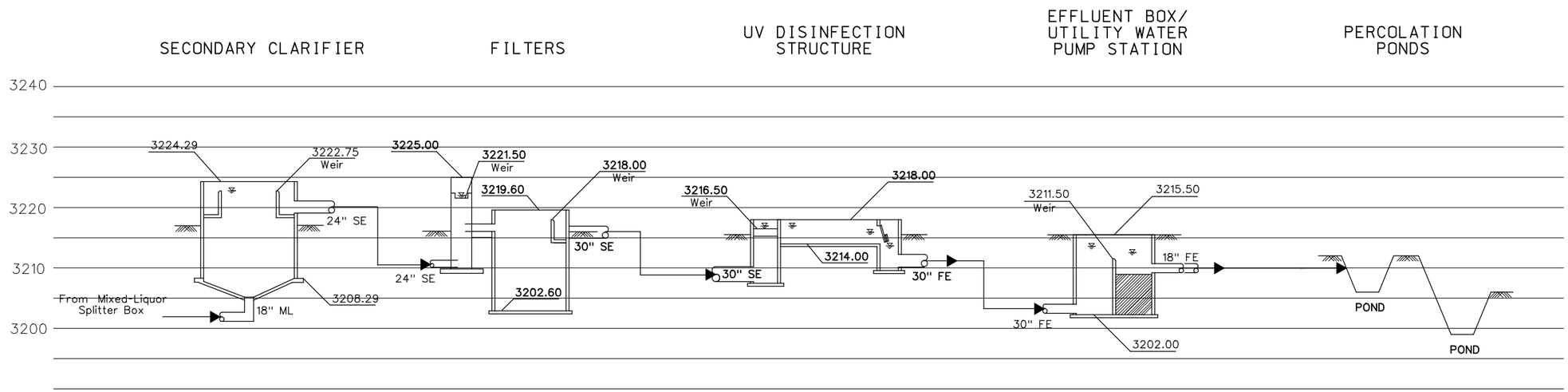

PIPE ABBREVIATION LEGEND

FE - FILTERED EFFLUENT
ML - MIXED LIQUOR
PI - PRIMARY INFLUENT
SE - SECONDARY EFFLUENT

SCALE			DRAWING
NTS	MWH Pasadena California	Hi-Desert Water Reclamation Facility Preliminary Design Report	HYDRAULIC PROFILE	00-3

File: DWG 00-3 Hyd Profile.dgn Model: Default ColorTable: bw.ctb DesignScript: MWH_lplot_Pentable_v85.pen PlotScale: 20:1 User: sjmunger Plot Date: 05-JAN-2009 11:55

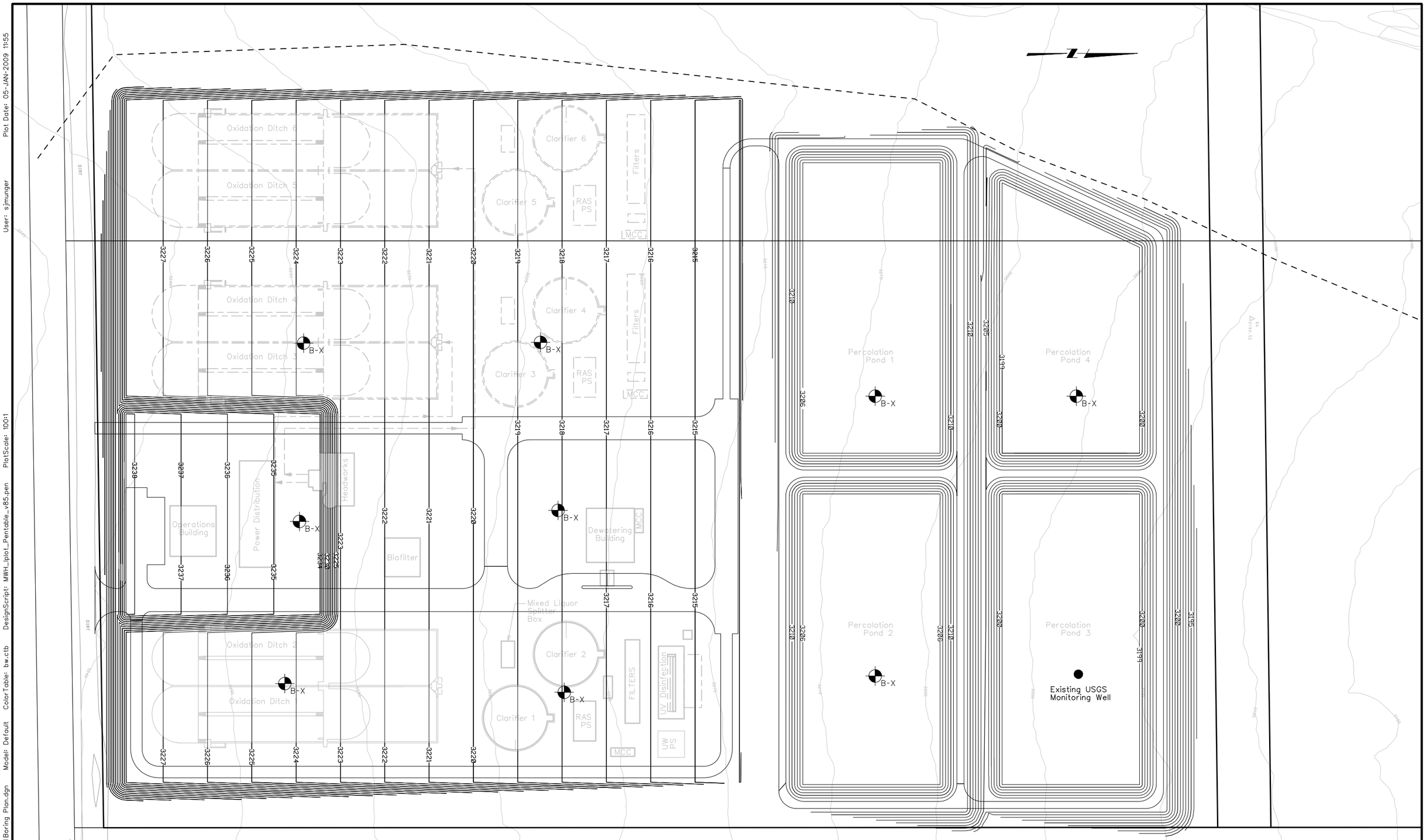

SCALE			DRAWING
1"=100'	MWH Pasadena California	Hi-Desert Water Reclamation Facility Preliminary Design Report	PROPOSED BORING LOCATIONS	00-4

File: DWG 00-4 SoilBoring Plan.dgn Model: Default ColorTable: bw.ctb DesignScript: MWH_lplot_Pentable_v85.pen PlotScale: 100:1 User: sjmunger Plot Date: 05-JAN-2009 11:55

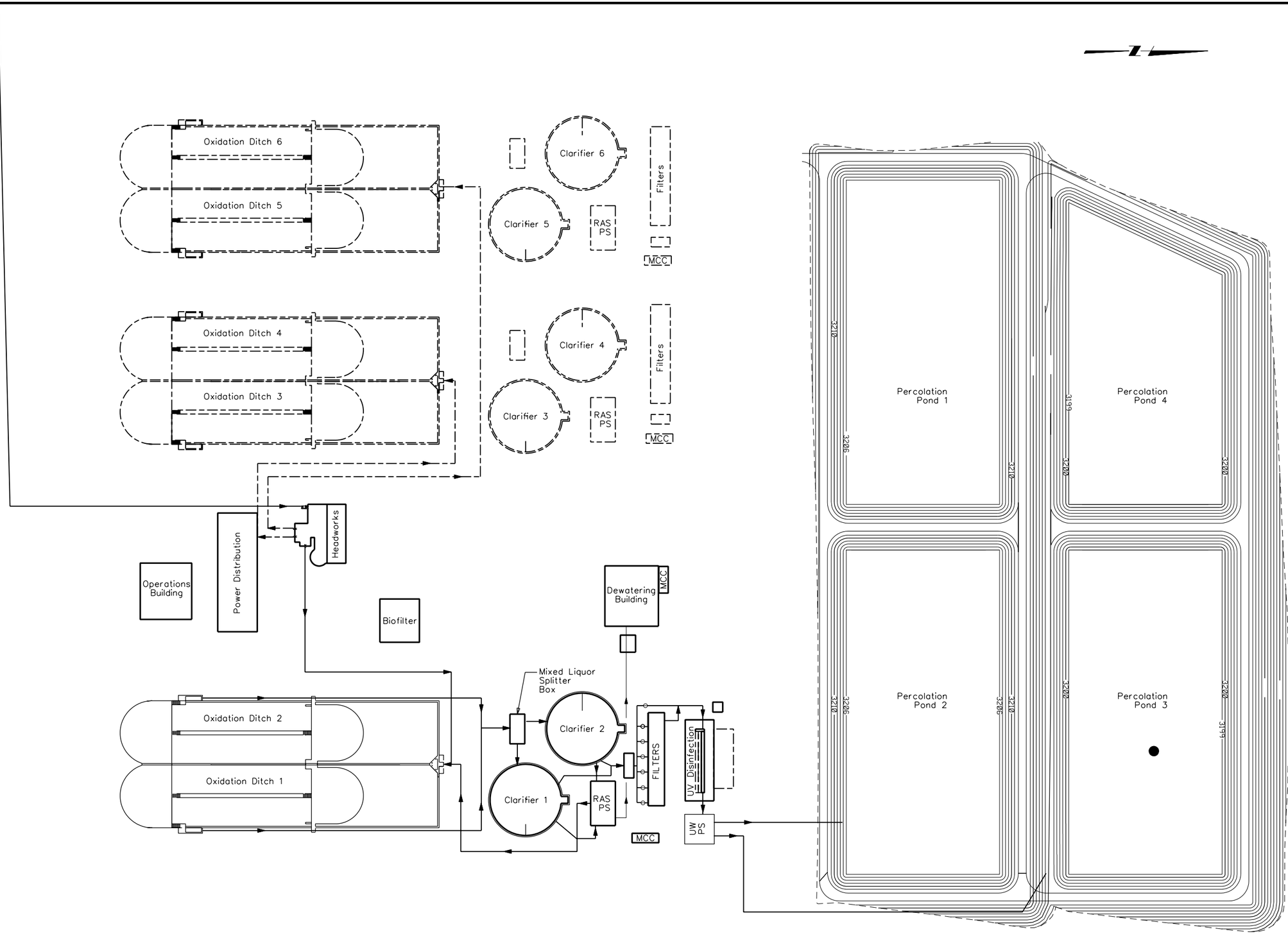

PIPING SHOWN TO BE INSTALLED BELOWGRADE

SCALE			DRAWING
1"=100'	MWH Pasadena California	Hi-Desert Water Reclamation Facility Preliminary Design Report	YARD PIPING LAYOUT	00-5

$$$$DATE$$$$
$$$$USER$$$$
$$$$FILENAME$$$$

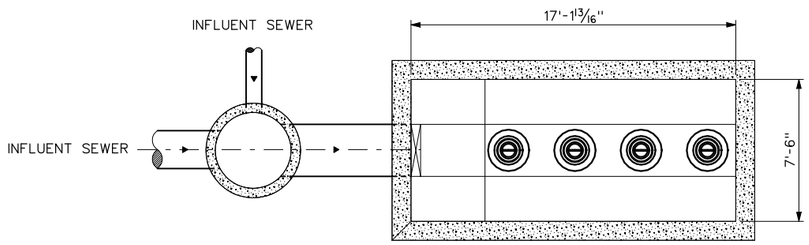

PLAN VIEW
(BELOW GROUND)

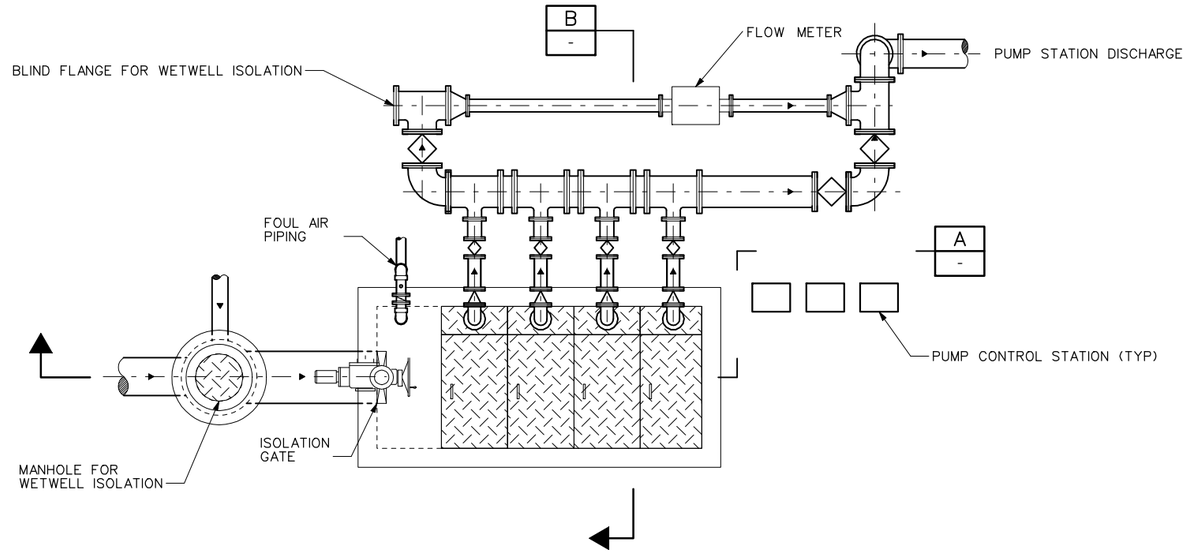

PLAN VIEW
(GROUND LEVEL)

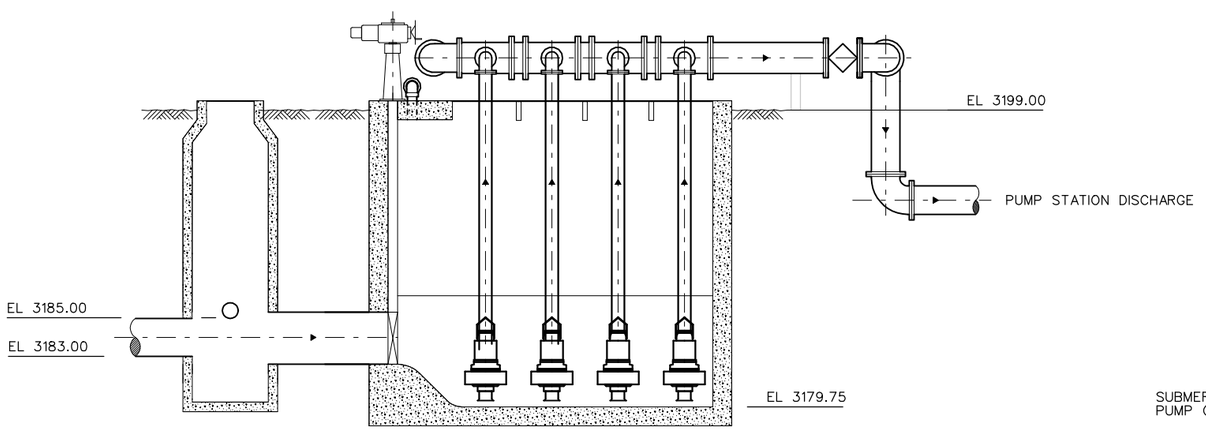

SECTION A

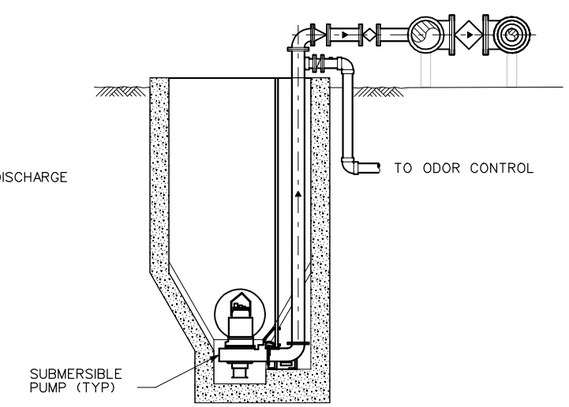

SECTION B

SCALE				DRAWING
1/8" = 1'-0"	MWH Pasadena California	Hi-Desert Water Reclamation Facility Preliminary Design Report	PAXTON PUMP STATION PLAN AND SECTIONS	01-1

File: DWG 01.1 Paxton Pump Station.dgn Model: Default ColorTable: bw.ctb DesignScript: MWH_lplot_Pentable_v85.pen PlotScale: 8:1 User: sjmunger Plot Date: 05-JAN-2009 11:55

NOTE: SITE PLAN GENERATED FOR GENERAL REQUIRED SITE DIMENSIONS ONLY. SITE PLAN LAYOUT AND PIPING TO BE UPDATED ONCE PARCEL SELECTED AND SITE ORIENTATION AND DIMENSIONS ARE KNOWN.

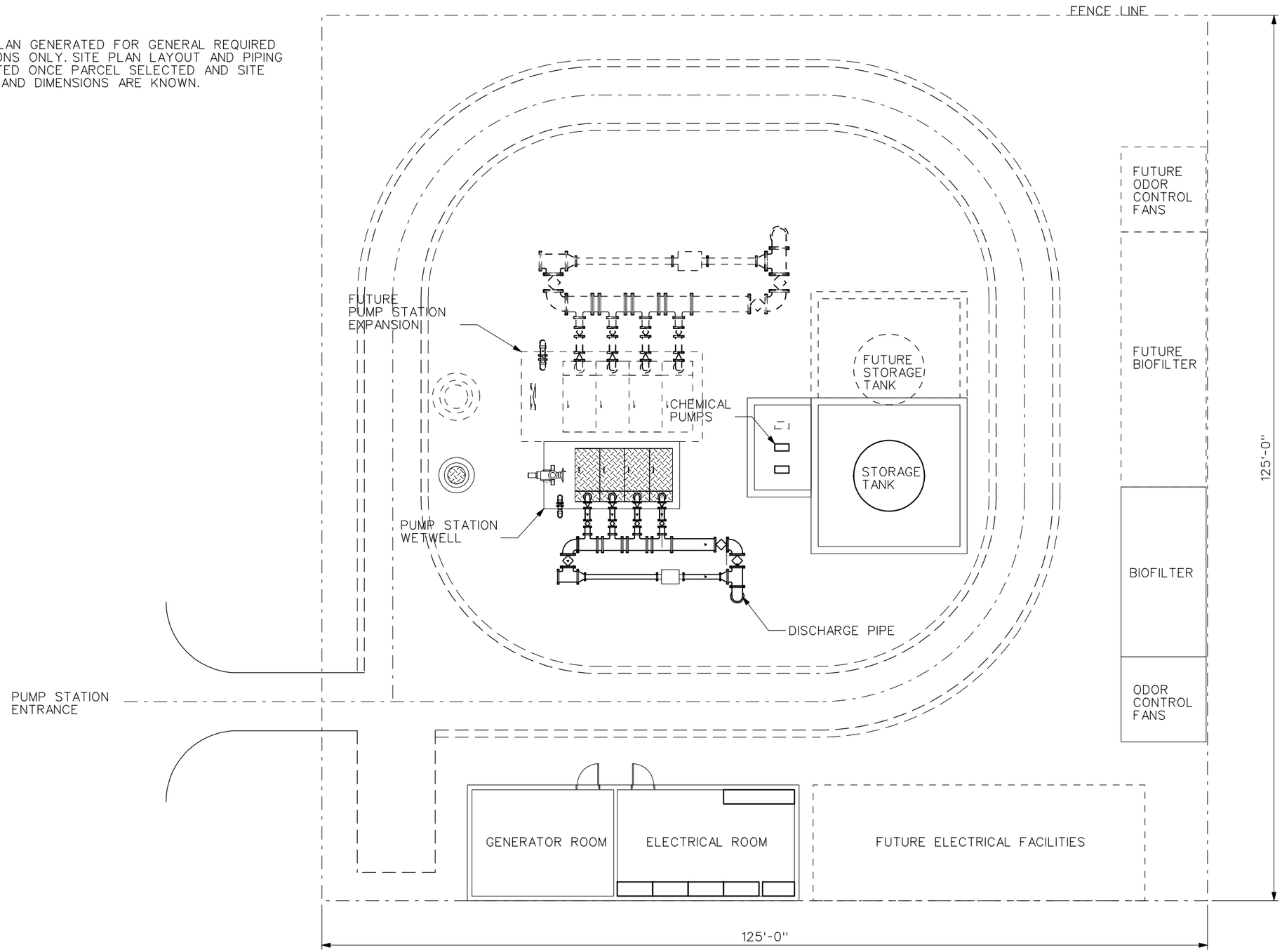

SCALE				DRAWING
1" = 15'	MWH Pasadena California	Hi-Desert Water Reclamation Facility Preliminary Design Report	PAXTON PUMP STATION SITE PLAN	01-2

File: DWG 01.2 PPS Site Plan.dgn Model: Default ColorTable: bw.ctb DesignScript: MWH_Iplot_Pentable_v85.pen PlotScale: 15:1 User: sjmunger Plot Date: 05-JAN-2009 11:55

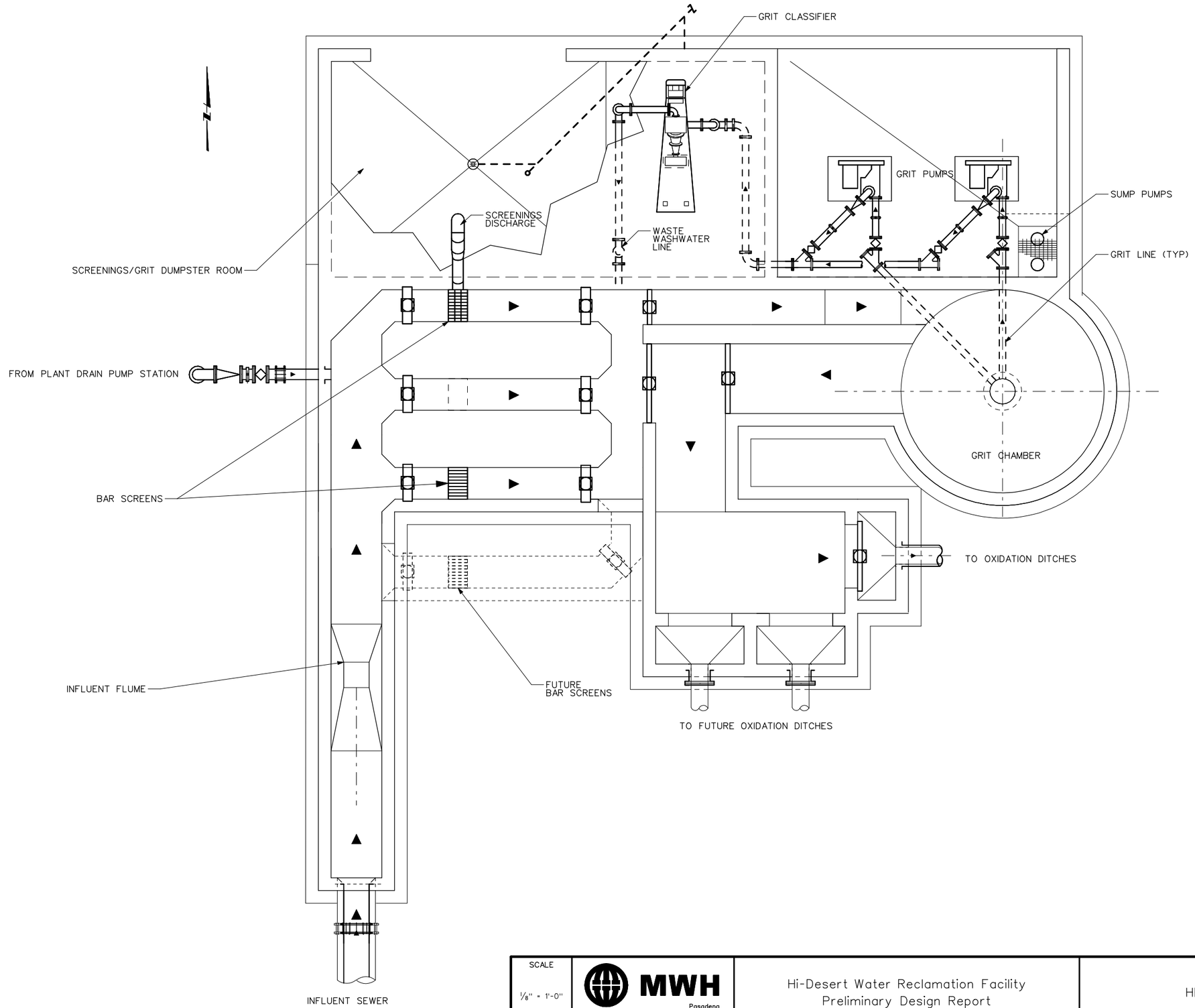

SCALE			DRAWING
1/8" = 1'-0"	MWH Pasadena California	Hi-Desert Water Reclamation Facility Preliminary Design Report	HEADWORKS - PLAN	02-1

File: DWG 02 Headworks.dgn Model: Default ColorTable: bw.ctb DesignScript: MWH_Iplot_Pentable_v85.pen PlotScale: 8:1 User: sjmunger Plot Date: 05-JAN-2009 11:55

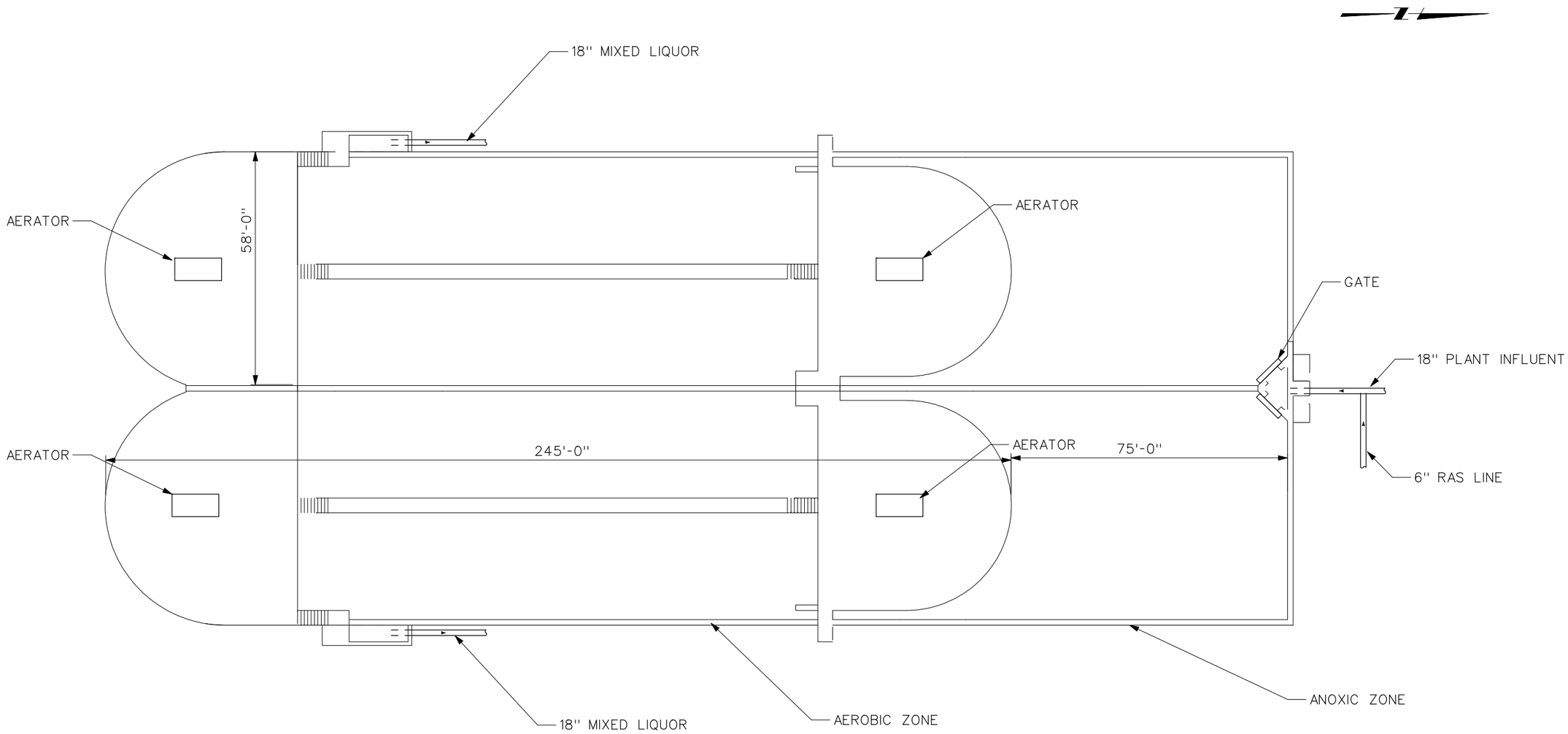

SCALE				DRAWING
1" = 30'	MWH Pasadena California	Hi-Desert Water Reclamation Facility Preliminary Design Report	OXIDATION DITCH - PLAN	03-1

File: DWG 03 Bioreactor.dgn Model: Default ColorTable: bw.ctb DesignScript: MWH_Iplot_Pentable_v85.pen PlotScale: 30:1 User: sjmunger Plot Date: 05-JAN-2009 11:55

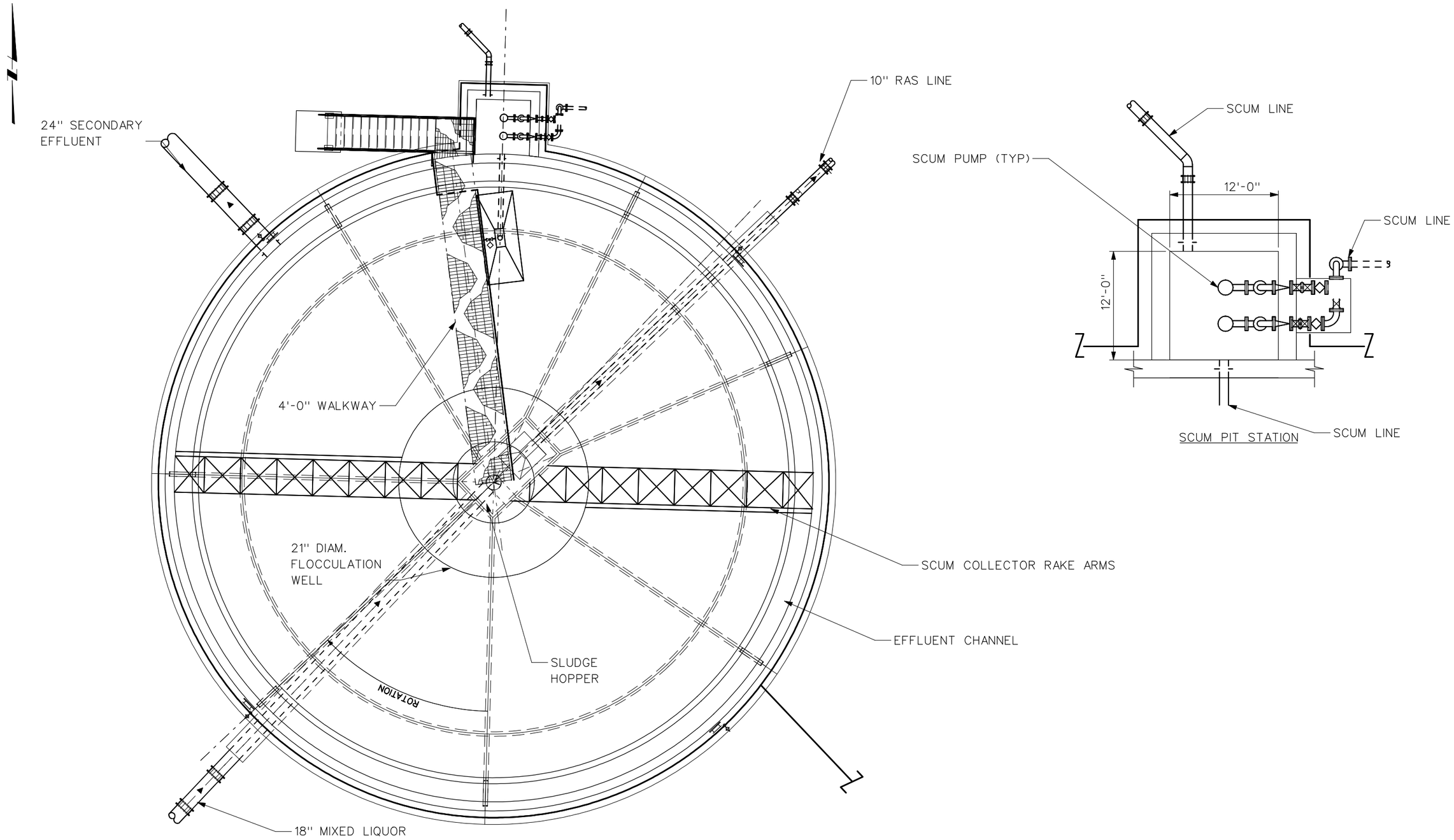

PIPING IS REPRESENTATIVE OF CLARIFIER NO. 1

SCALE				DRAWING
3/32" = 1'-0"	MWH Pasadena California	Hi-Desert Water Reclamation Facility Preliminary Design Report	SECONDARY CLARIFIER - PLAN	04-1

File: DWG 04 Clarifier.dgn Model: Default ColorTable: bw.ctb DesignScript: MWH_lplot_Pentable_v85.pen PlotScale: 10.666667:1 User: sjmunger Plot Date: 05-JAN-2009 11:55

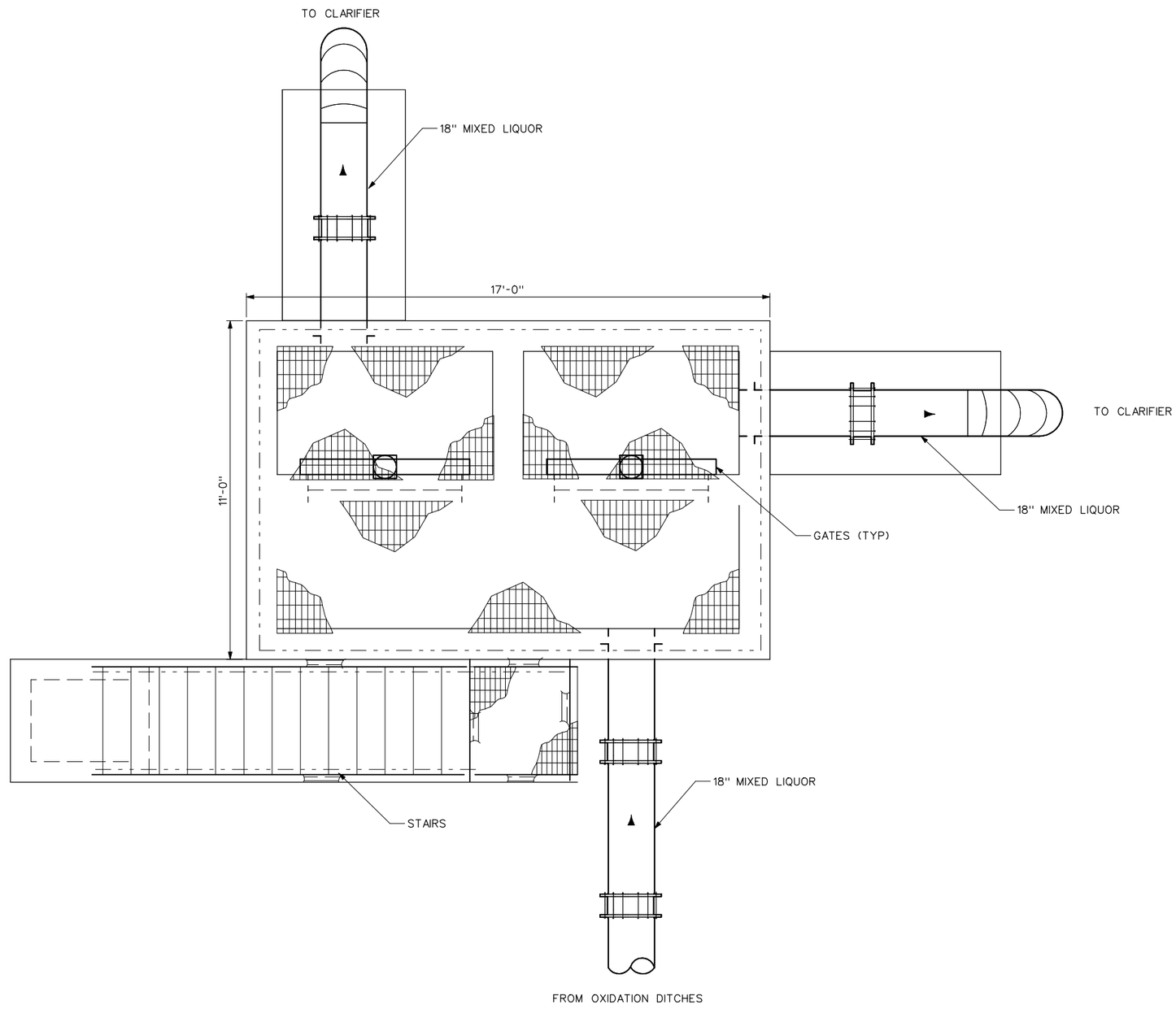

SCALE				DRAWING
1/4" = 1'-0"	MWH Pasadena California	Hi-Desert Water Reclamation Facility Preliminary Design Report	MIXED LIQUOR SPLITTER BOX - PLAN	04-2

File: DWG 04 Splitter.dgn Model: Default ColorTable: bw.ctb DesignScript: MWH_iplot_Pentable_v85.pen PlotScale: 4:1 User: sjmunger Plot Date: 05-JAN-2009 11:55

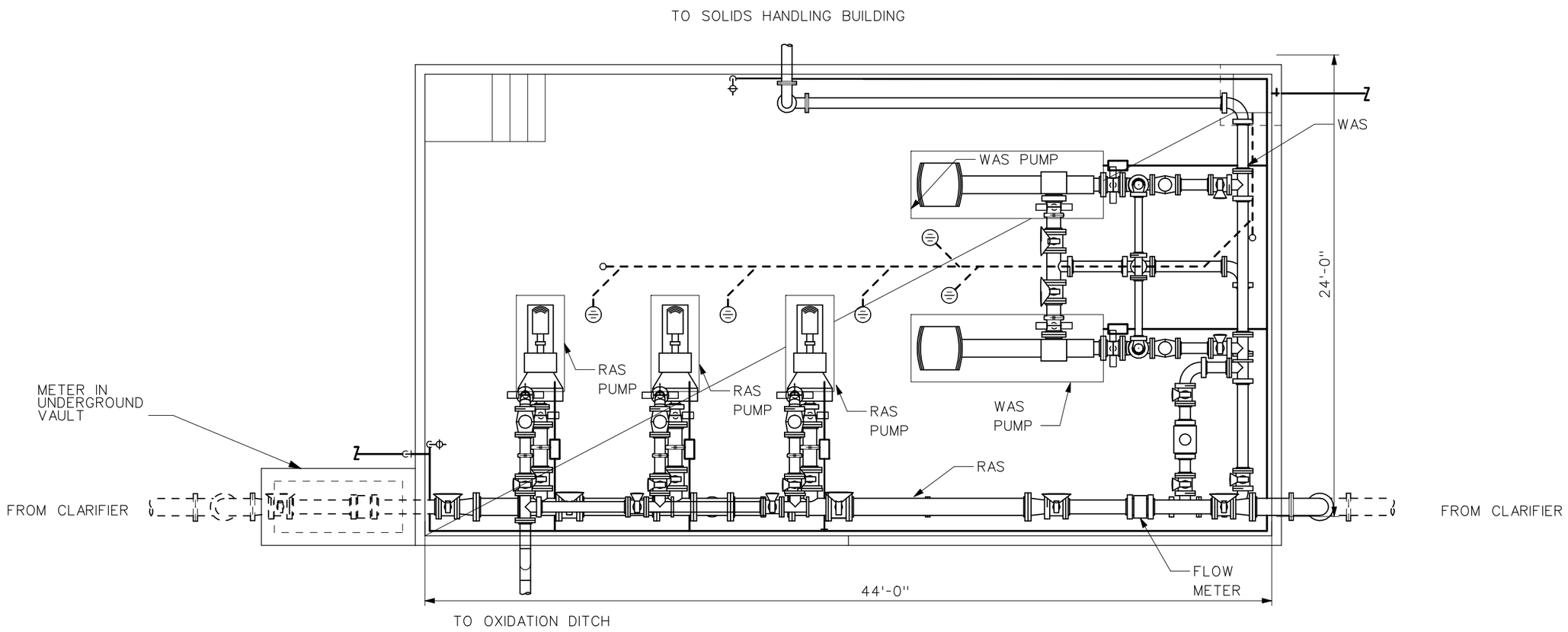

SCALE			DRAWING
3/16" - 1'-0"	MWH Pasadena California	Hi-Desert Water Reclamation Facility Preliminary Design Report	RAS/WAS PUMP STATION - PLAN	05-1

File: DWG 05 RAS.dgn Model: Default ColorTable: bw.ctb DesignScript: MWH_lplot_Pentable_v85.pen PlotScale: 5.996954:1 User: sjmunger Plot Date: 05-JAN-2009 11:56

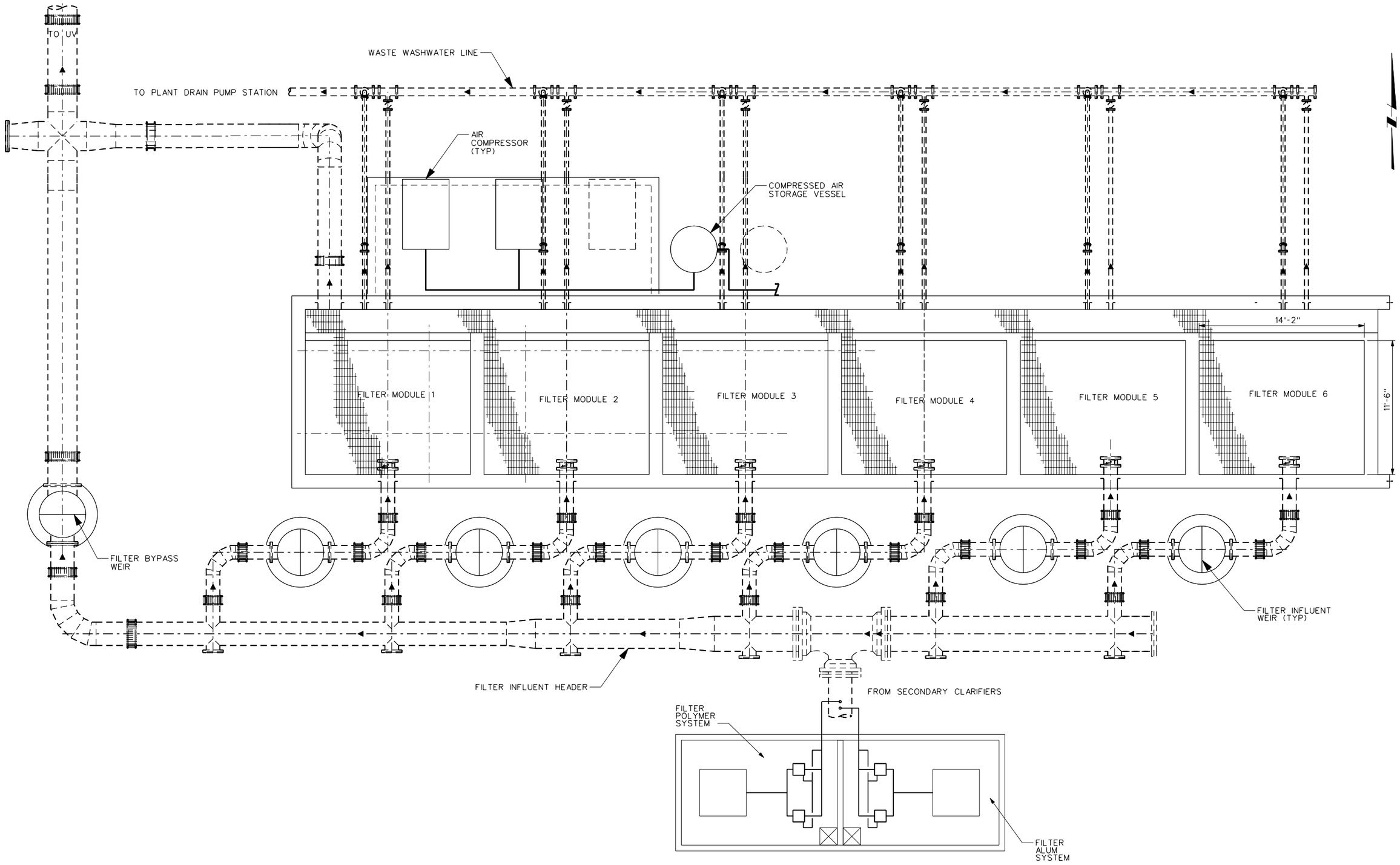

SCALE			DRAWING
1/8" = 1'-0"	MWH Pasadena California	Hi-Desert Water Reclamation Facility Preliminary Design Report	FILTERS	06-1

$$$$DATE$$$$

$$$$USER$$$$

$$$$FILENAME$$$$

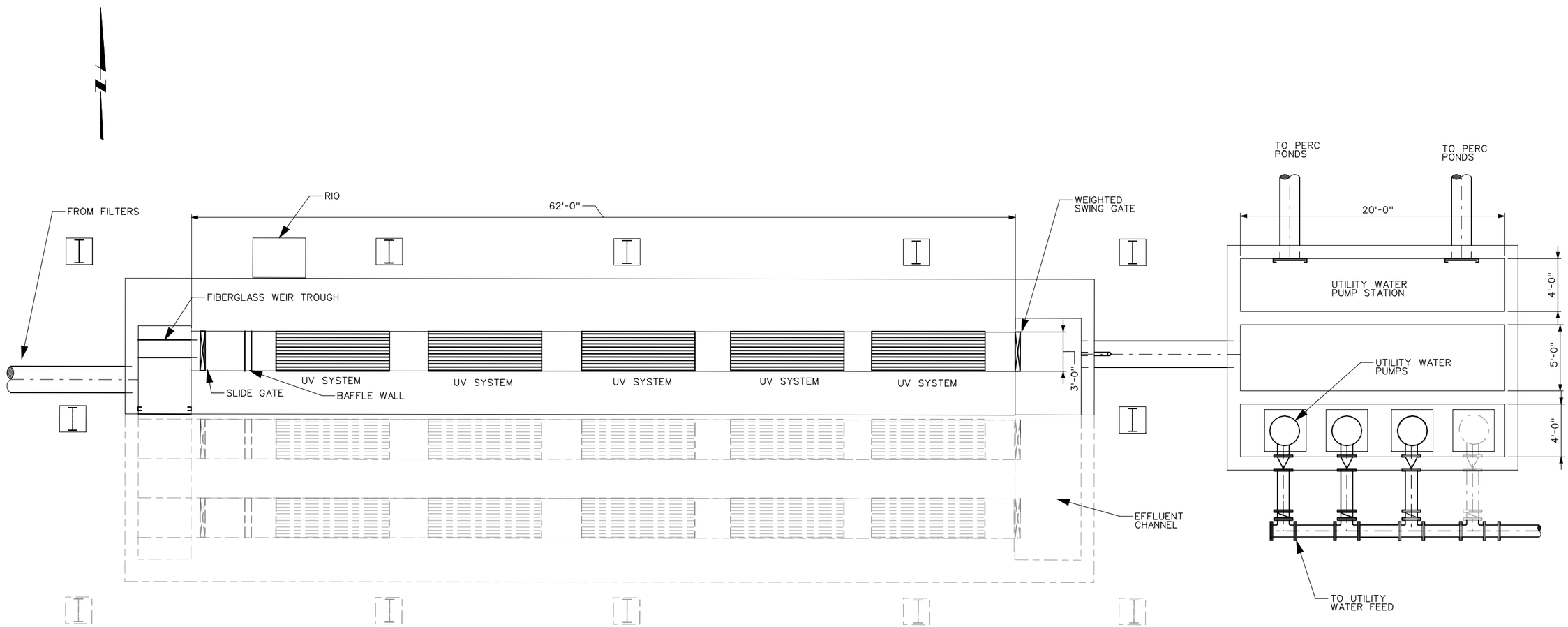

SCALE				DRAWING
1/8"=1'-0"	MWH Pasadena California	Hi-Desert Water Reclamation Facility Preliminary Design Report	UV REACTOR & UTILITY WATER PUMP STATION PLAN	07-1

File: DWG 07 UV.dgn Model: Default ColorTable: bw.ctb DesignScript: MWH_Iplot_Pentable_v85.pen PlotScale: 8:1 User: sjmunger Plot Date: 05-JAN-2009 11:56

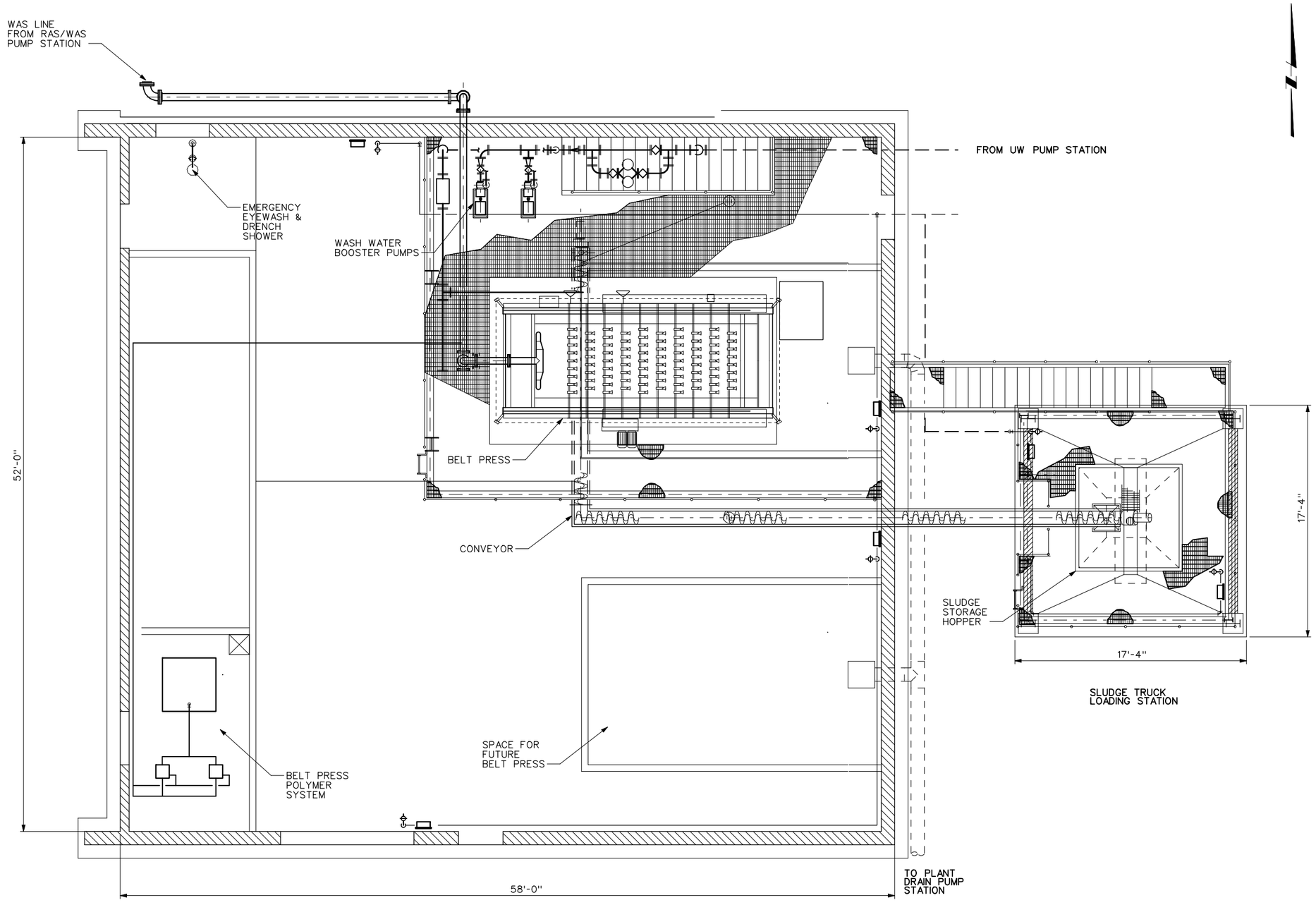

SCALE				DRAWING
1/8" = 1'	MWH Pasadena California	Hi-Desert Water Reclamation Facility Preliminary Design Report	SOLIDS HANDLING BUILDING - PLAN	10-1

File: DWG 10 Solids.dgn Model: Default ColorTable: bw.ctb DesignScript: MWH_Iplot_Pentable_v85.pen PlotScale: 8:1 User: sjmunger Plot Date: 05-JAN-2009 11:56

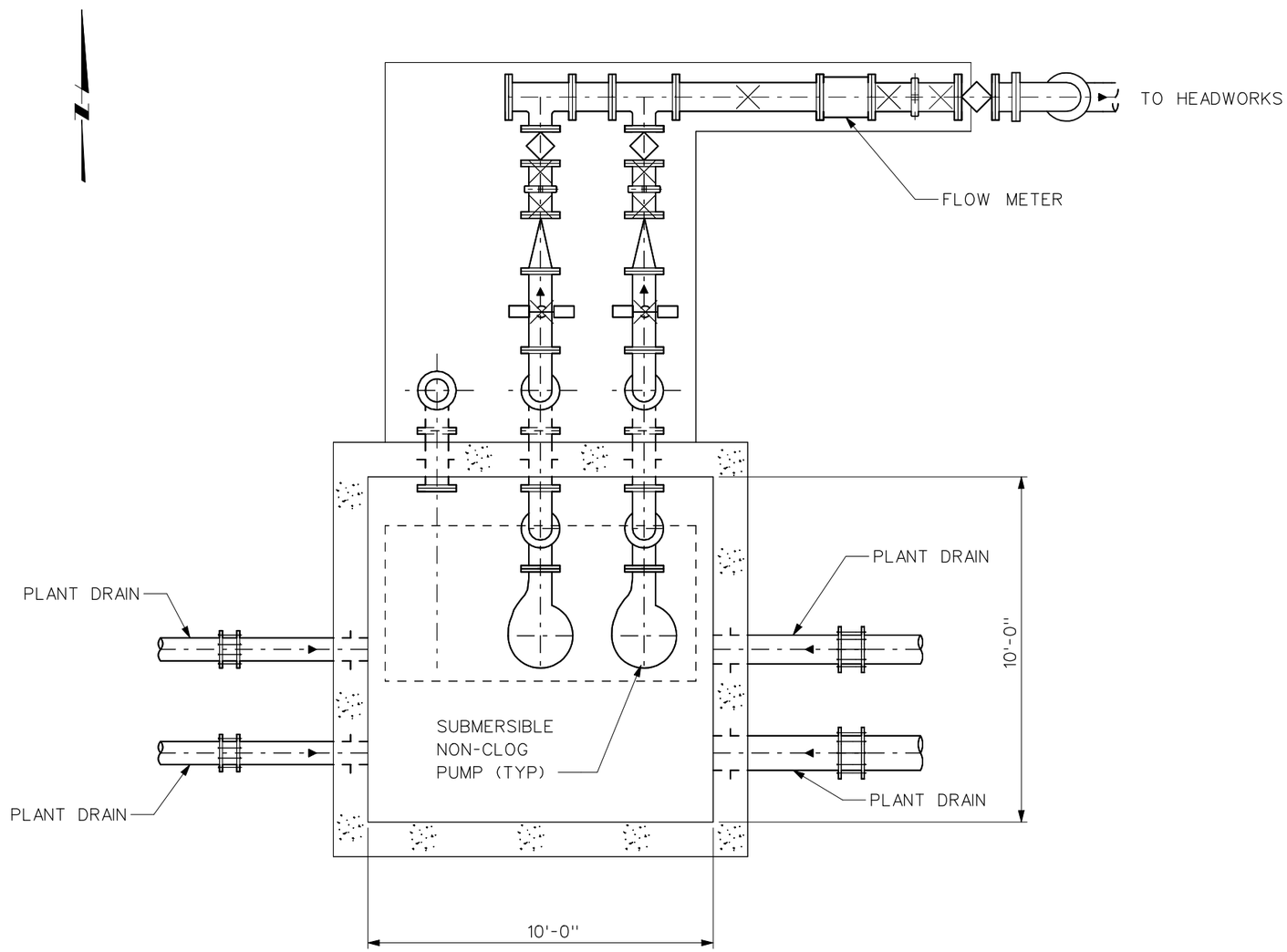

SCALE			DRAWING
¼" = 1'-0"	MWH Pasadena California	Hi-Desert Water Reclamation Facility Preliminary Design Report	PLANT DRAIN PUMP STATION - PLAN	11-1

File: DWG 11 PDS.dgn Model: Default ColorTable: bw.ctb DesignScript: MWH_Iplot_Pentable_v85.pen PlotScale: 4:1 User: sjmunger Plot Date: 05-JAN-2009 11:56

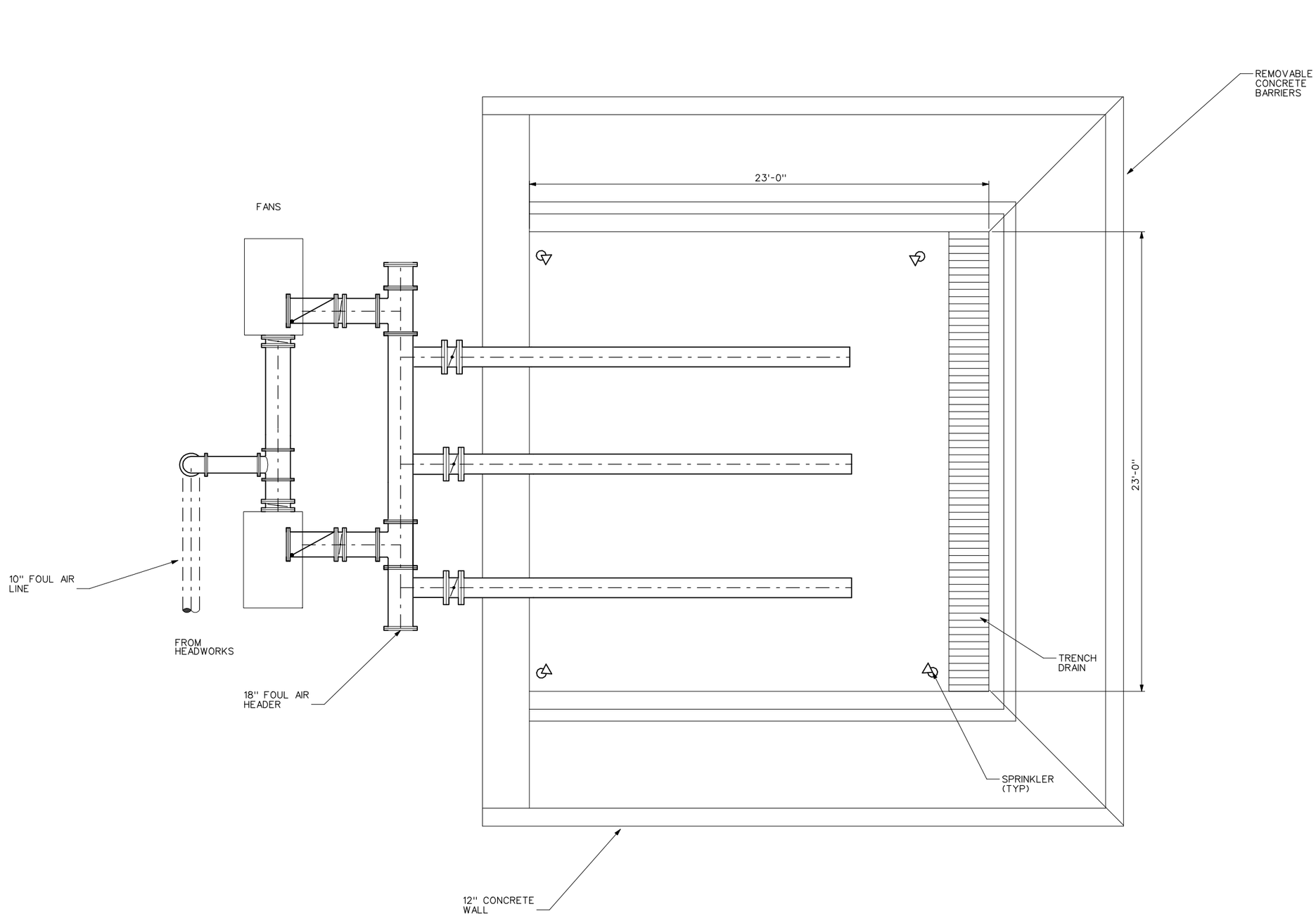

SCALE			DRAWING
3/16" = 1'-0"	MWH Pasadena California	Hi-Desert Water Reclamation Facility Preliminary Design Report	BIOFILTER - PLAN	12-1

File: DWG 12 Biofilter.dgn Model: Default ColorTable: bw.ctb DesignScript: MWH_Iplot_Pentable_v85.pen PlotScale: 5.33333331 User: sjmunger Plot Date: 05-JAN-2009 11:56

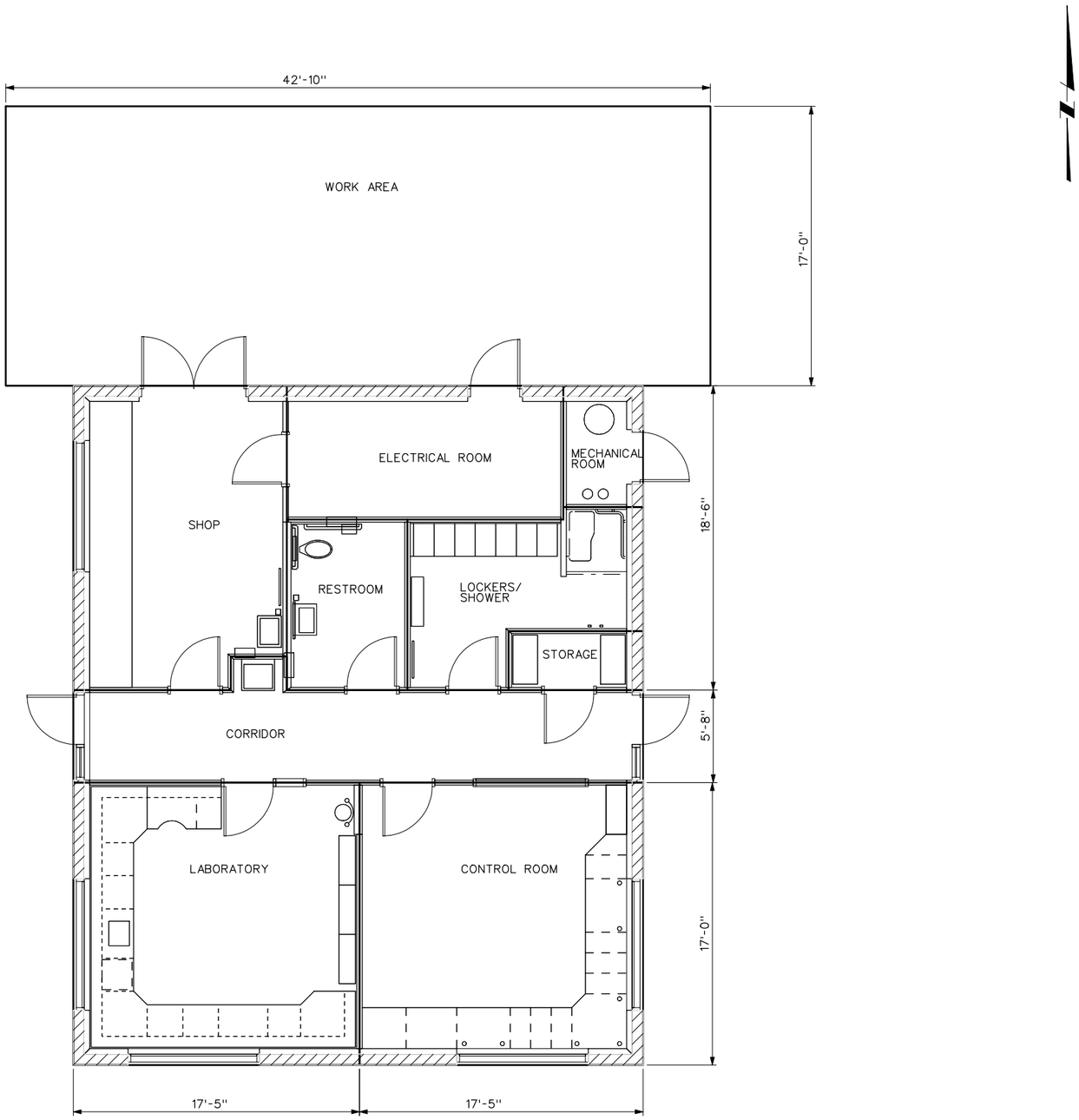

SCALE			DRAWING
1/8" = 1'-0"	MWH Pasadena California	Hi-Desert Water Reclamation Facility Preliminary Design Report	OPERATIONS BUILDING - PLAN	13-1

File: DWG 13 Ops Bldg.dgn Model: Default ColorTable: bw.ctb DesignScript: MWH_lplot_Pentable_v85.pen PlotScale: 8:1 User: sjmunger Plot Date: 05-JAN-2009 11:56

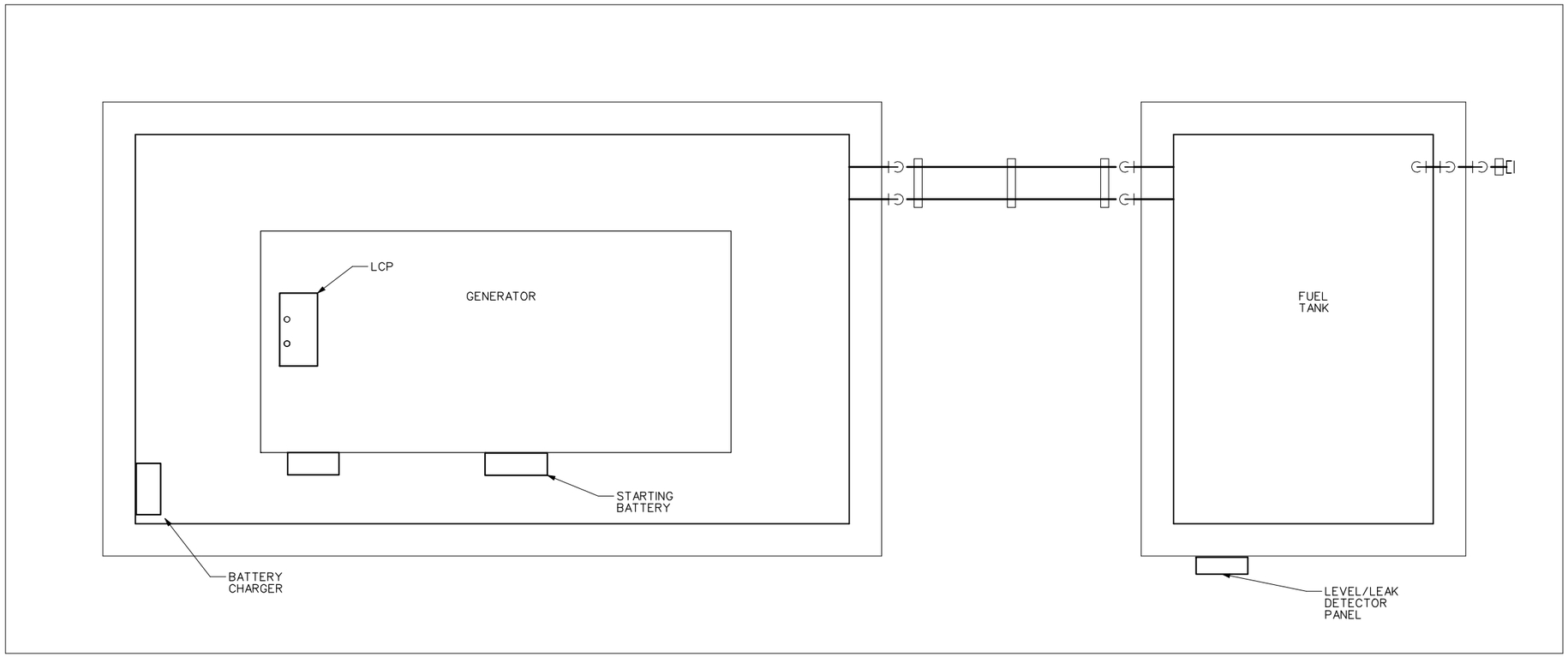

SCALE			DRAWING
1/4" = 1'-0"	MWH Pasadena California	Hi-Desert Water Reclamation Facility Preliminary Design Report	GENERATOR - PLAN	14-1

File: DWG 14 Power.dgn Model: Default ColorTable: bw.ctb DesignScript: MWH_Iplot_Pentable_v85.pen PlotScale: 4:1 User: sjmunger Plot Date: 05-JAN-2009 11:56