CONSTRUCTION PLANS
FOR
IRVINE RANCH WATER DISTRICT

BAKER WATER TREATMENT PLANT
100% SUBMITTAL

VOLUME 3A

SHEET 1 THROUGH SHEET 388 OF 632
GENERAL–DEMOLITION–CIVIL–ARCHITECTURAL–STRUCTURAL–MECHANICAL

PROJECT NUMBER 11218 (1417)

PROJECT PARTNERS

MUNICIPAL WATER DISTRICT OF ORANGE COUNTY
EL TORO WATER DISTRICT
Moulton Niguel Water
Santa Margarita Water District
TRABUCO CANYON WATER DISTRICT

IRVINE RANCH WATER DISTRICT

FEBRUARY 2012

SUBMITTED BY:

CINDY L. MILLER R.C.E. 58116 PROJECT MANAGER DATE

SUBMITTED BY:

JAMES A. MEYERHOFER R.C.E. 48451 PROJECT MANAGER DATE

APPROVED:
IRVINE RANCH WATER DISTRICT
DIRECTOR OF ENGINEERING AND CONSTRUCTION

KEVIN L. BURTON R.M.E. M28832 DATE

No.	DATE	REVISIONS	APPROVED

RBF CONSULTING
PLANNING ■ DESIGN ■ CONSTRUCTION
14725 ALTON PARKWAY
IRVINE, CALIFORNIA 92618-2027
949.472.3505 • FAX 949.472.8373 • www.RBF.com

carollo

DRAWING G001
SHEET 1 OF 632

BAKER WATER TREATMENT PLANT - PROJECT NO. 11218 (1417) / CODE 5573
FILENAME: 6232-G001.dwg
LAST UPDATED: 01/30/2012 02:47 PM
LAST SAVED BY: ewalker

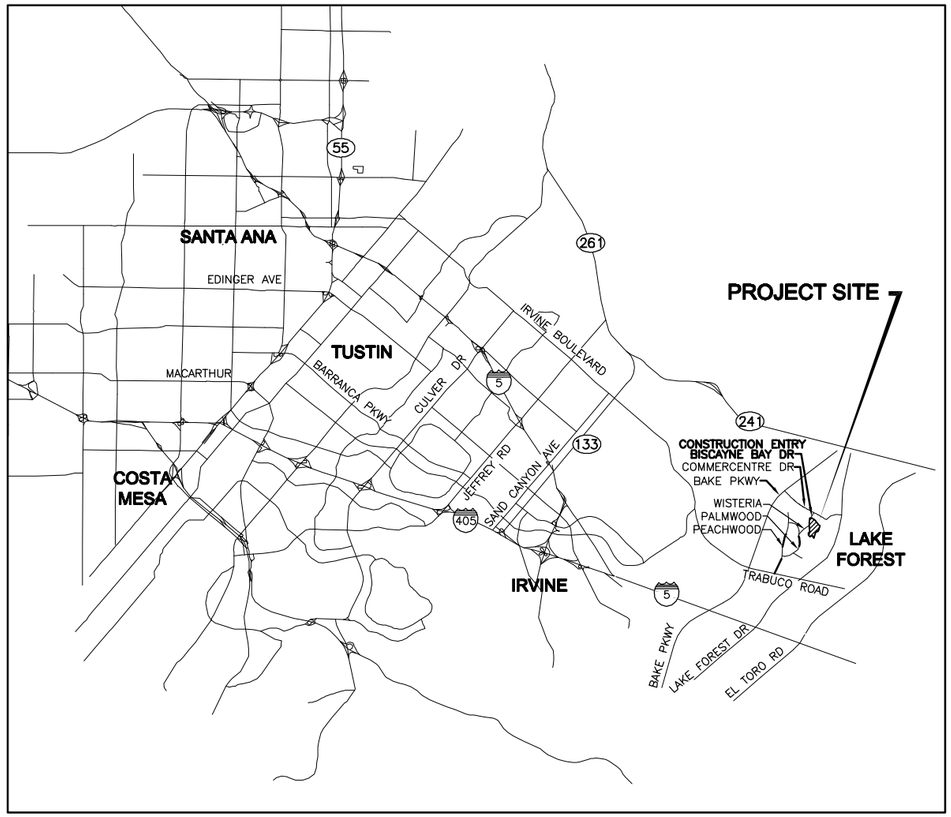

LOCATION MAP
NTS

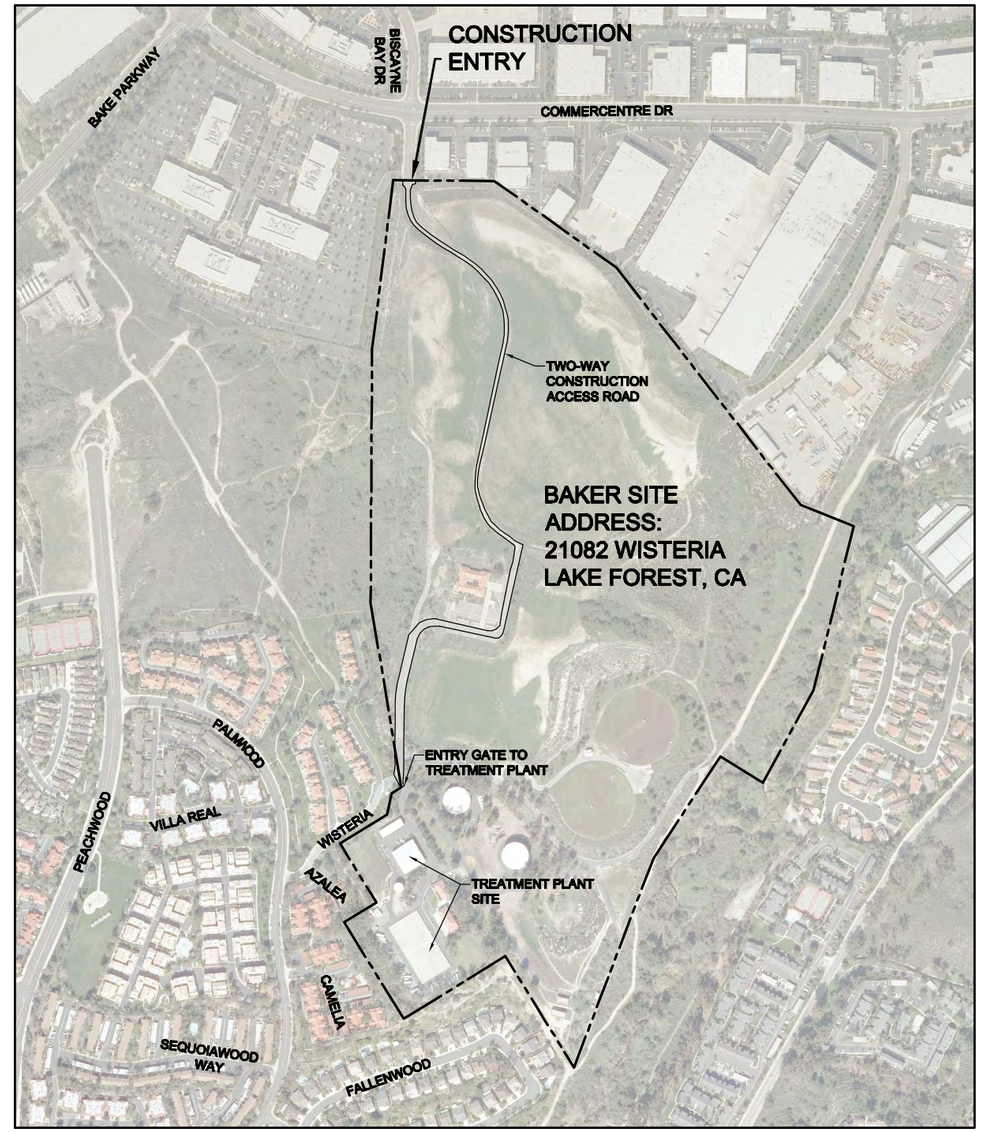

VICINITY MAP
NTS

No.	DATE	REVISIONS	APPROVED

DESIGNED: CBH
DRAWN: DDT
CHECKED: CLM

RBF CONSULTING

carollo

IRVINE RANCH WATER DISTRICT

COREY HESS	RCE NO. 68499	PROJECT ENGINEER	DATE
CINDY MILLER	RCE NO. 58116	PROJECT MANAGER	DATE
PATRICIA UEMATSU	RCE NO. 36762	PRINCIPAL ENGINEER	DATE

IRVINE RANCH WATER DISTRICT
BAKER WATER TREATMENT PLANT
PROJECT NO. 11218

LOCATION AND VICINITY MAP

DRAWING
G002
SHEET
2 OF 632

LAST SAVED BY: ewalker LAST UPDATED: 01/23/2012 02:09 PM FILENAME: 6232-G002.dwg

GENERAL

SHEET	DRAWING	DESCRIPTION
1.	G001	TITLE SHEET - VOLUME I
2.	G002	LOCATION AND VICINITY MAP
3.	G003	LIST OF DRAWINGS I
4.	G004	LIST OF DRAWINGS II
5.	G005	ABBREVIATION LIST, SECTION AND DETAIL NUMBERING SYSTEM
6.	G006	INDEX MAP, STANDARD NOTES, UTILITY AGENCY INDEX SECTION AND NUMBERING
7.	G007	DESIGN CRITERIA
8.	G008	DESIGN CRITERIA II
9.	G009	DESIGN CRITERIA III CHEMICALS
10.	G010	PROCESS FLOW DIAGRAM
11.	G011	HYDRAULIC PROFILE I MAIN PROCESS
12.	G012	HYDRAULIC PROFILE II
13.	G013	HYDRAULIC PROFILE II BACKWASH RECOVERY
14.	G014	KEY MAP OF NEW FACILITIES

DEMOLITION

SHEET	DRAWING	DESCRIPTION
15.	D001A	DEMOLITION KEY PLAN, GENERAL NOTES & LEGEND
16.	D001B	PIPE DEMOLITION SCHEDULE
17.	D002A	CONTRACTOR ACCESS AND SITE USE
18.	D002B	UTILITY RELOCATIONS
19.	D003A	DEMOLITION PLAN AREA-1 ABOVE AND AT GRADE
20.	D003B	DEMOLITION PLAN AREA-1 BELOW GRADE
21.	D004A	DEMOLITION PLAN AREA-2 ABOVE AND AT GRADE
22.	D004B	DEMOLITION PLAN AREA-2 BELOW GRADE
23.	D005A	DEMOLITION PLAN AREA-3 ABOVE AND AT GRADE
24.	D005B	DEMOLITION PLAN AREA-3 BELOW GRADE
25.	D006A	DEMOLITION PLAN AREA-4 ABOVE AND AT GRADE
26.	D006B	DEMOLITION PLAN AREA-4 BELOW GRADE
27.	D007A	DEMOLITION PLAN AREA-5 ABOVE AND AT GRADE
28.	D008A	DEMOLITION PLAN AREA-6 ABOVE AND AT GRADE

CIVIL

SHEET	DRAWING	DESCRIPTION
29.	C001	TYPICAL SYMBOLS, LEGEND, PIPE DESIGNATION AND SCHEDULE
30.	C002	CIVIL KEY MAP
31.	C003A	ROUGH GRADING PLAN WATER TREATMENT PLANT AREA 1
32.	C003B	ROUGH GRADING PLAN CROSS SECTIONS AREA 1
33.	C004A	ROUGH GRADING PLAN ACCESS ROAD AREA 2
34.	C004B	ROUGH GRADING PLAN ACCESS ROAD AREA 2
35.	C004C	ROUGH GRADING PLAN ACCESS ROAD AREA 2
36.	C004D	ROUGH GRADING PLAN ACCESS ROAD AREA 2
37.	C004E	ROUGH GRADING PLAN ACCESS ROAD AREA 2
38.	C004F	ROUGH GRADING PLAN ACCESS ROAD AREA 2
39.	C004G	ROUGH GRADING PLAN ACCESS ROAD AREA 2
40.	C005	ROUGH GRADING PLAN FLOW CONTROL FACILITY & TCWD PUMP STATION - AREA 2
41.	C006	ROUGH GRADING PLAN TCWD PUMP STATION AREA 2
42.	C007	ROUGH GRADING PLAN PRODUCT WATER PUMP STATION AREA 3 (NOT A PART)
43.	C008	STOCKPILE PLAN
44.	C009	PRECISE GRADING PLAN WATER TREATMENT PLANT AREA 1
45.	C010A	PRECISE GRADING PLAN ACCESS ROAD AREA 2
46.	C010B	PRECISE GRADING PLAN ACCESS ROAD AREA 2
47.	C010C	PRECISE GRADING PLAN ACCESS ROAD AREA 2
48.	C010D	PRECISE GRADING PLAN ACCESS ROAD AREA 2
49.	C010E	PRECISE GRADING AND PAVING PLAN ACCESS ROAD AREA 2
50.	C010F	PRECISE GRADING AND PAVING PLAN ACCESS ROAD AREA 2
51.	C010G	PRECISE GRADING PLAN ACCESS ROAD AREA 2
52.	C011	PRECISE GRADING PLAN FLOW CONTROL FACILITY AREA 2
53.	C012	PRECISE GRADING PLAN TCWD PUMP STATION AREA 2
54.	C013	PRECISE GRADING PLAN PRODUCT WATER PUMP STATION AREA 3 (NOT A PART)
55.	C014	HORIZONTAL CONTROL PLAN WATER TREATMENT PLANT AREA 1
56.	C015A	HORIZONTAL CONTROL PLAN ACCESS ROAD AREA 2
57.	C015B	HORIZONTAL CONTROL PLAN ACCESS ROAD AREA 2
58.	C015C	HORIZONTAL CONTROL PLAN ACCESS ROAD AREA 2
59.	C015D	HORIZONTAL CONTROL PLAN ACCESS ROAD AREA 2
60.	C015E	HORIZONTAL CONTROL PLAN ACCESS ROAD AREA 2
61.	C015F	HORIZONTAL CONTROL PLAN ACCESS ROAD AREA 2
62.	C015G	HORIZONTAL CONTROL PLAN ACCESS ROAD AREA 2
63.	C016	HORIZONTAL CONTROL PLAN FLOW CONTROL FACILITY AREA 2
64.	C017	HORIZONTAL CONTROL PLAN PRODUCT WATER PUMP STATION AREA 3 (NOT A PART)
65.	C018	RETAINING WALL PLAN & PROFILE FOREBAY
66.	C019A	RETAINING WALL PLAN & PROFILE TCWD PUMP STATION
67.	C019B	RETAINING WALL PLAN & PROFILE PRODUCT WATER PUMP STATION
68.	C020	SITE FENCING AND GATE PLAN
69.	C021	CIVIL DETAILS I
70.	C021A	CIVIL DETAILS II
71.	C022	CIVIL DETAILS III
72.	C023	PIPING DETAILS I
73.	C024	PIPING DETAILS II
74.	C025	YARD PIPING KEY MAP
75.	C026	YARD PIPING PLAN WATER TREATMENT PLANT AREA 1
76.	C027	YARD PIPING PLAN RW AND MFWW PIPING AREA 1
77.	C028	YARD PIPING PLAN BAKER PIPELINE, FCF AND TCWD PS AREA 2
78.	C029	YARD PIPING PLAN PRODUCT WATER PUMP STATION AREA 3 (NOT A PART)
79.	C030	YARD PIPING PLAN CLEARWELLS INLET/OUTLET AREA 4
80.	C031A	DRAIN PIPING PLAN AREA 1
81.	C031B	DRAIN PIPING PLAN AREA 3

CIVIL

SHEET	DRAWING	DESCRIPTION
82.	C032A	SEWER PIPING PLAN AREA 1
83.	C032B	SEWER PIPING PLAN AREA 3
84.	C033A	FIRE AND UTILITY WATER PLAN AREA 1 & 2
85.	C033B	FIRE AND UTILITY WATER PLAN AREA 3
86.	C034A	CHEMICAL PIPING PLAN AREA1
87.	C034B	CHEMICAL PIPING SCHEMATICS AND SECTIONS
88.	C034C	CHEMICAL PIPING PULL BOXES I
89.	C034D	CHEMICAL PIPING PULL BOXES II
90.	C034E	CHEMICAL PIPING DETAILS
91.	C035	SAMPLE PIPING PLAN AREA1
92.	C036	YARD PIPING PROFILES I
93.	C037	YARD PIPING PROFILES II
94.	C038	YARD PIPING PROFILES III
95.	C039	YARD PIPING PROFILES IV
96.	C040	YARD PIPING PROFILES V
97.	C041	YARD PIPING PROFILES VI
98.	C042	YARD PIPING PROFILES VII
99.	C043	YARD PIPING PROFILES VIII
100.	C044	OVERFLOW DRAINAGE PROFILE I
101.	C045	OVERFLOW DRAINAGE PROFILE II
102.	C046	SEWER PIPELINE PROFILES
103.	C047	NRW SEWER PLAN AND PROFILE I (NOT A PART)
104.	C048	NRW SEWER PLAN AND PROFILE II (NOT A PART)
105.	C049	NRW SEWER PLAN AND PROFILE III (NOT A PART)
106.	C050	FIRE PROTECTION WATER PROFILES-I
107.	C051	FIRE PROTECTION WATER PROFILES-II
108.	C070	PRODUCT WATER PIPELINE I (NOT A PART)
109.	C071	PRODUCT WATER PIPELINE II (NOT A PART)
110.	C072	PRODUCT WATER PIPELINE III (NOT A PART)
111.	C073	PRODUCT WATER PIPELINE IV (NOT A PART)
112.	C074	PRODUCT WATER PAVING REPLACEMENT PLAN (NOT A PART)
113.	C075	PW PIPELINE PAVEMENT REPLACEMENT PLAN (NOT A PART)

ARCHITECTURAL

SHEET	DRAWING	DESCRIPTION
114.	A001	ARCHITECTURAL GENERAL NOTES
115.	A002	ACCESSIBILITY DETAILS
116.	A003	ACCESSIBILITY DETAILS
117.	A004	TYPICAL DOOR & OPENING DETAILS
118.	A005	TYPICAL DOOR & OPENING DETAILS
119.	A006	TYPICAL DOOR & OPENING DETAILS
120.	A007	TYPICAL ROOF DETAILS
121.	A008	ROOF AND WALL DETAILS
122.	A009	EXTERIOR DETAILS
123.	A010	INTERIOR DETAILS
124.	A101	FCF BUILDING & TCWD PUMP STATION BUILDING FIRST FLOOR PLAN AND EXITING
125.	A102	FCF BUILDING & TCWD PUMP STATION BUILDING ROOF PLAN
126.	A103	TCWD PUMP STATION & FLOW CONTROL FACILITY EXTERIOR ELEVATIONS
127.	A104	TCWD PUMP STATION & FLOW CONTROL FACILITY BUILDING SECTIONS
128.	A105	TCWD PUMP STATION & FLOW CONTROL FACILITY DOOR, OPENING, & FINISH SCHEDULE
129.	A201	MF FEED PUMP STATION FIRST FLOOR PLAN & EXITING
130.	A202	MF FEED PUMP STATION MONITOR LEVEL PLAN
131.	A203	MF FEED PUMP STATION ROOF PLAN
132.	A204	MF FEED PUMP STATION EXTERIOR ELEVATIONS I
133.	A205	MF FEED PUMP STATION EXTERIOR ELEVATIONS II
134.	A206	MF FEED PUMP STATION BUILDING SECTIONS
135.	A207	FOREBAY DOOR, OPENING, & FINISH SCHEDULE
136.	A301	TREATMENT BUILDING LOWER FLOOR PLAN
137.	A302	TREATMENT BUILDING FIRST FLOOR PLAN & EXITING
138.	A303	TREATMENT BUILDING REFLECTED CEILING PLAN
139.	A304	TREATMENT BUILDING MONITOR PLAN
140.	A305	TREATMENT BUILDING ROOF PLAN
141.	A306	TREATMENT BUILDING ENLARGED PLAN
142.	A307	TREATMENT BUILDING ENLARGED REFLECTED CEILING PLAN
143.	A308	TREATMENT BUILDING ENLARGED STAIR PLANS & SECTIONS
144.	A309	TREATMENT BUILDING EXTERIOR ELEVATIONS I
145.	A310	TREATMENT BUILDING EXTERIOR ELEVATIONS II
146.	A311	TREATMENT BUILDING SECTION I
147.	A312	TREATMENT BUILDING SECTION II
148.	A313	TREATMENT BUILDING DOOR AND OPENING SCHEDULE
149.	A314	TREATMENT BUILDING FINISH SCHEDULE
150.	A315	TREATMENT BUILDING INTERIOR ELEVATIONS
151.	A316	TREATMENT BUILDING DETAILS
152.	A317	TREATMENT BUILDING DETAILS
153.	A318	TREATMENT BUILDING DETAILS - CANOPY
154.	A501	PRODUCT WATER PUMP STATION FIRST FLOOR PLAN (NOT A PART)
155.	A502	PRODUCT WATER PUMP STATION MONITOR FLOOR PLAN (NOT A PART)
156.	A503	PRODUCT PUMP STATION ROOF PLAN (NOT A PART)
157.	A504	PRODUCT PUMP STATION EXTERIOR ELEVATIONS (NOT A PART)
158.	A505	PRODUCT PUMP STATION BUILDING SECTIONS (NOT A PART)
159.	A506	PRODUCT PUMP STATION DOOR, OPENING, & FINISH SCHEDULE (NOT A PART)
160.	A701	CHEMICAL BUILDING FIRST FLOOR PLAN AND EXITING
161.	A702	CHEMICAL BUILDING MONITOR FLOOR PLAN
162.	A703	CHEMICAL BUILDING REFLECTED CEILING PLAN
163.	A704	CHEMICAL BUILDING ROOF PLAN
164.	A705	CHEMICAL BUILDING EXTERIOR ELEVATIONS I
165.	A706	CHEMICAL BUILDING EXTERIOR ELEVATIONS II

ARCHITECTURAL

SHEET	DRAWING	DESCRIPTION
166.	A707	CHEMICAL BUILDING SECTIONS I
167.	A708	CHEMICAL BUILDING BUILDING AND WALL SECTIONS II
168.	A709	CHEMICAL BUILDING DOOR, OPENING, & FINISH SCHEDULE

STRUCTURAL

SHEET	DRAWING	DESCRIPTION
169.	S001	STRUCTURAL STANDARD DETAILS - 1
170.	S002	STRUCTURAL STANDARD DETAILS - 2
171.	S003	STRUCTURAL STANDARD DETAILS - 3
172.	S004	STRUCTURAL STANDARD DETAILS - 4
173.	S005	STRUCTURAL STANDARD DETAILS - 5
174.	S006	STRUCTURAL STANDARD DETAILS - 6
175.	S007	STRUCTURAL STANDARD DETAILS - 7
176.	S008	STRUCTURAL STANDARD DETAILS - 8
177.	S009	STRUCTURAL STANDARD DETAILS - 9
178.	S010	STRUCTURAL STANDARD DETAILS - 10
179.	S011	STRUCTURAL STANDARD DETAILS - 11
180.	S020	RETAINING WALLS STRUCTURAL DETAILS
181.	S021	RETAINING WALLS STRUCTURAL SECTIONS
182.	S101	FLOW CONTROL FACILITY FOUNDATION AND PLATFORM PLANS
183.	S102	FLOW CONTROL FACILITY ROOF PLAN AND SECTIONS
184.	S103	FLOW CONTROL FACILITY SECTIONS
185.	S104	FLOW CONTROL FACILITY ELEVATIONS
186.	S105	FLOW CONTROL FACILITY SECTIONS AND DETAILS
187.	S106	FLOW CONTROL FACILITY TRUSS DETAILS I
188.	S107	FLOW CONTROL FACILITY TRUSS DETAILS II
189.	S108	FLOW CONTROL FACILITY MISC. SECTIONS AND DETAILS
190.	S109	TCWD PUMP STATION FOUNDATION/FLOOR PLAN
191.	S110	TCWD PUMP STATION ROOF PLAN
192.	S111	TCWD PUMP STATION ROOF PLAN - BOTTOM CHORD
193.	S112	TCWD PUMP STATION SECTIONS
194.	S113	TCWD PUMP STATION ELEVATIONS
195.	S114	TCWD PUMP STATION TRUSS DETAILS I
196.	S115	TCWD PUMP STATION TRUSS DETAILS II
197.	S116	TCWD PUMP STATION MISC. SECTIONS AND DETAILS I
198.	S201	FOREBAY FOUNDATION
199.	S202	FOREBAY PLAN AT EL 636.00
200.	S203	FOREBAY ROOF FRAMING PLAN
201.	S204	FOREBAY SECTION - A AND B
202.	S205	FOREBAY SECTION - C, D AND E
203.	S206	FOREBAY SECTION - F AND G
204.	S207	FOREBAY DETAIL - 1
205.	S208	FOREBAY DETAIL - 2
206.	S209	FOREBAY DETAIL - 3
207.	S210	FOREBAY DETAIL - 4
208.	S211	FOREBAY DETAIL - 5
209.	S212	FOREBAY DETAIL - 6
210.	S213	FOREBAY DETAIL - 7
211.	S214	FOREBAY DETAIL - 8
212.	S215	FOREBAY DETAIL - 9
213.	S216	FOREBAY DETAIL - 10
214.	S217	FOREBAY DETAIL - 11
215.	S218	FOREBAY DETAIL - 12
216.	S219	FOREBAY DETAIL - 13
217.	S220	FOREBAY DETAIL - 14
218.	S221	FOREBAY DETAIL - 15
219.	S222	FOREBAY DETAIL - 16
220.	S223	FOREBAY DETAIL - 17
221.	S224	FOREBAY DETAIL - 18
222.	S225	FOREBAY DETAIL - 19
223.	S226	FOREBAY SECTION - J
224.	S227	FOREBAY MISCELLANEOUS DETAILS
225.	S301	TREATMENT BUILDING LOWER LEVEL PLAN AT EL 614.50
226.	S302	TREATMENT BUILDING FOUNDATION & FLOOR PLAN AT EL 629.50
227.	S303	TREATMENT BUILDING LOWER ROOF PLAN
228.	S304	TREATMENT BUILDING HIGHER ROOF PLAN
229.	S305	TREATMENT BUILDING SECTION - A, B, C, AND D
230.	S306	TREATMENT BUILDING SECTION - E AND F
231.	S307	TREATMENT BUILDING SECTION - G AND H
232.	S308	TREATMENT BUILDING DETAIL - 1
233.	S309	TREATMENT BUILDING DETAIL - 2
234.	S310	TREATMENT BUILDING DETAIL - 3
235.	S311	TREATMENT BUILDING DETAIL - 4
236.	S312	TREATMENT BUILDING DETAIL - 5
237.	S313	TREATMENT BUILDING DETAIL - 6
238.	S314	TREATMENT BUILDING DETAIL - 7
239.	S315	TREATMENT BUILDING DETAIL - 8
240.	S316	TREATMENT BUILDING DETAIL - 9
241.	S317	TREATMENT BUILDING DETAIL - 10
242.	S318	TREATMENT BUILDING DETAIL - 11 & SECTION - M
243.	S319	TREATMENT BUILDING DETAIL - 12
244.	S320	TREATMENT BUILDING DETAIL - 13
245.	S321	TREATMENT BUILDING DETAIL - 14
246.	S322	TREATMENT BUILDING DETAIL - 15
247.	S323	TREATMENT BUILDING DETAIL - 16
248.	S324	TREATMENT BUILDING DETAIL - 17
249.	S325	TREATMENT BUILDING MISCELLANEOUS DETAILS

STRUCTURAL

SHEET	DRAWING	DESCRIPTION
250.	S326	TREATMENT BUILDING SECTION - J
251.	S327	TREATMENT BUILDING SECTION - K & L
252.	S328	TREATMENT BUILDING SECTION & DETAILS
253.	S401	CT BASIN FOUNDATION PLAN
254.	S402	CT BASIN TOP PLAN
255.	S403	CT BASIN SECTION - A
256.	S404	CT BASIN SECTION - B & C
257.	S405	CT BASIN SECTION - D & E
258.	S406	CT BASIN SECTION - F
259.	S407	CT BASIN SECTION - G
260.	S408	CT BASIN SECTION - H & I
261.	S501	PRODUCT WATER CLEARWELLS INLET PIPING MODIFICATIONS PLAN AND NOTES
262.	S502	PRODUCT WATER CLEARWELLS INLET PIPING MODIFICATIONS SECTIONS AND DETAILS
263.	S503	PRODUCT WATER CLEARWELLS INLET PIPING VAULT FOUNDATION AND ROOF PLANS
264.	S504	PRODUCT WATER CLEARWELLS INLET PIPING VAULT SECTIONS AND DETAILS
265.	S510	PRODUCT PUMP STATION FOUNDATION/FLOOR PLAN (NOT A PART)
266.	S511	PRODUCT PUMP STATION MONITOR ROOF PLAN (NOT A PART)
267.	S512	PRODUCT PUMP STATION ROOF PLANS (NOT A PART)
268.	S513	PRODUCT PUMP STATION ROOF PLAN - BOTTOM CHORD (NOT A PART)
269.	S514	PRODUCT PUMP STATION LONGITUDINAL SECTIONS (NOT A PART)
270.	S515	PRODUCT PUMP STATION TRANSVERSE SECTIONS (NOT A PART)
271.	S516	PRODUCT PUMP STATION TRUSS DETAILS (NOT A PART)
272.	S517	PRODUCT PUMP STATION MISC. SECTIONS AND DETAILS (NOT A PART)
273.	S520	PRODUCT WATER METERING VAULT PLANS AND SECTIONS (NOT A PART)
274.	S521	PWP SCP VALVE VAULT FOUNDATION AND ROOF PLAN (NOT A PART)
275.	S522	PWP SCP VALVE VAULT SECTIONS (NOT A PART)
276.	S523	PWP SCP VALVE VAULT SECTIONS AND DETAILS (NOT A PART)
277.	S701	CHEMICAL BUILDING FOUNDATION PLAN AND DETAILS
278.	S702	CHEMICAL BUILDING ROOF FRAMING PLAN
279.	S703	CHEMICAL BUILDING SECTION - A
280.	S704	CHEMICAL BUILDING SECTION - B
281.	S705	CHEMICAL BUILDING SECTION - C
282.	S706	CHEMICAL BUILDING SECTION - D

MECHANICAL

SHEET	DRAWING	DESCRIPTION
283.	M001	MECHANICAL NOTES AND SYMBOLS
284.	M002	MECHANICAL PIPE SCHEDULE AND MATERIAL SCHEDULE - I
285.	M003	MECHANICAL PIPE SCHEDULE AND MATERIAL SCHEDULE - II
286.	M004	EQUIPMENT SCHEDULE - I (NOT A PART)
287.	M005	EQUIPMENT SCHEDULE - II (NOT A PART)
288.	M006	SAMPLE WATER SCHEMATICS
289.	M007	MECHANICAL TYPICAL DETAILS - I
290.	M008	MECHANICAL TYPICAL DETAILS - II
291.	M009	MECHANICAL TYPICAL DETAILS - III
292.	M010	MECHANICAL TYPICAL DETAILS - IV
293.	M011	MECHANICAL TYPICAL DETAILS - V
294.	M012	MECHANICAL TYPICAL DETAILS - VI
295.	M013	MECHANICAL TYPICAL DETAILS - VII
296.	M014	MECHANICAL TYPICAL DETAILS - VIII
297.	M015	MECHANICAL TYPICAL DETAILS - IX
298.	M016	MECHANICAL TYPICAL DETAILS - X
299.	M017	MECHANICAL TYPICAL DETAILS - XI
300.	M018	MECHANICAL TYPICAL DETAILS - XII
301.	M019	MECHANICAL TYPICAL DETAILS - XIII
302.	M020	MECHANICAL TYPICAL DETAILS - XIV
303.	M021	MECHANICAL TYPICAL DETAILS - XV
304.	M022	MECHANICAL TYPICAL DETAILS - XVI
305.	M105	FLOW CONTROL FACILITY MECHANICAL PLAN, AND SECTION
306.	M106	FLOW CONTROL FACILITY TOP SLAB AND MEZZANINE PLAN
307.	M107	FLOW CONTROL FACILITY MECHANICAL SECTIONS
308.	M108	TRABUCO CANYON WATER DISTRICT PUMP STATION MECHANICAL PLAN
309.	M109	TRABUCO CANYON WATER DISTRICT PUMP STATION MECHANICAL SECTIONS
310.	M110	TRABUCO CANYON WATER DISTRICT PUMP STATION MECHANICAL SECTIONS
311.	M111	CHLORINE DIOXIDE VAULT
312.	M200	RW VALVE VAULTS NO.1 & NO.2 FOREBAY INLETS PLAN AND SECTION
313.	M201	FOREBAY, MF PUMP STATION, STRAINERS, AND MFWW CLARIFIER KEY PLAN
314.	M202	FOREBAY AND MF PUMP STATION BOTTOM PLAN
315.	M203	FOREBAY AND MF PUMP STATION TOP PLAN
316.	M204	FOREBAY AND MF PUMP STATION SECTION
317.	M205	FOREBAY AND MF PUMP STATION SECTION
318.	M206	FOREBAY AND MF PUMP STATION SECTIONS
319.	M207	FOREBAY AND MF PUMP STATION SECTION AND DETAIL
320.	M208	MFWW CLARIFIER BOTTOM PLAN
321.	M209	MFWW CLARIFIER TOP PLAN
322.	M210	MFWW CLARIFIER SECTION
323.	M211	MFWW CLARIFIER SECTION
324.	M212	FOREBAY, MF PUMP STATION, STRAINERS, AND MFWW CLARIFIER DETAILS
325.	M213	FOREBAY AND MF PUMP STATION DECHLORINATION PASSIVE SYSTEM
326.	M300	TREATMENT BUILDING LOWER LEVEL PIPE GALLERY PLAN
327.	M301	TREATMENT BUILDING UPPER LEVEL KEY PLAN
328.	M302	TREATMENT BUILDING MF RACKS AND PIPE GALLERY SECTION
329.	M303	TREATMENT BUILDING MF FEED RACKS SECTION
330.	M304	TREATMENT BUILDING MF FEED RACK ENLARGED PLAN
331.	M305	TREATMENT BUILDING MF FEED RACK ISOMETRIC VIEW
332.	M306	TREATMENT BUILDING MFWW EQUALIZATION BASIN ENLARGED PLAN AND SECTION
333.	M307	TREATMENT BUILDING MFWW EQUALIZATION BASIN SECTION

FILENAME: 6232-G003.dwg

LAST UPDATED: 01/23/2012 10:15 AM

LAST SAVED BY: aretana

No.	DATE	REVISIONS	APPROVED

DESIGNED: CBH
DRAWN: DDT
CHECKED: CLM

RBF CONSULTING

carollo

IRVINE RANCH WATER DISTRICT

COREY HESS	RCE NO. 68499	PROJECT ENGINEER	DATE
CINDY MILLER	RCE NO. 58116	PROJECT MANAGER	DATE
PATRICIA UEMATSU	RCE NO. 36762	PRINCIPAL ENGINEER	DATE

IRVINE RANCH WATER DISTRICT
BAKER WATER TREATMENT PLANT
PROJECT NO. 11218

LIST OF DRAWINGS I

DRAWING
G003

Att5_IG2_WorkPlan_4of7

Attachment 3

SOC WMA

MECHANICAL

SHEET	DRAWING	DESCRIPTION
334.	M308	TREATMENT BUILDING BLOWER/COMPRESSOR ROOM ENLARGED PLAN AND SECTION
335.	M309	TREATMENT BUILDING BLOWER/COMPRESSOR ROOM SECTIONS
336.	M312	TREATMENT BUILDING UV DISINFECTION AREA ENLARGED PLAN
337.	M313	TREATMENT BUILDING UV DISINFECTION AREA SECTION
338.	M314	TREATMENT BUILDING UV DISINFECTION AREA SECTIONS
339.	M315	TREATMENT BUILDING UV DISINFECTION AREA SECTION
340.	M316	TREATMENT BUILDING UV DISINFECTION AREA SECTIONS
341.	M317	TREATMENT BUILDING CIP AREA ENLARGED PLAN
342.	M318	TREATMENT BUILDING CIP AREA SECTIONS
343.	M319	TREATMENT BUILDING CIP AREA SECTION
344.	M320	TREATMENT BUILDING CIP AREA SECTIONS
345.	M321	TREATMENT BUILDING MF RACKS AND PIPE GALLERY SECTIONS AND DETAILS
346.	M322	TREATMENT BUILDING UV PIPE SUPPORT - ELEVATION SECTIONS AND DETAILS
347.	M401	CT BASIN LOWER PLAN
348.	M402	CT BASIN TOP PLAN
349.	M403	CT BASIN SECTION
350.	M404	CT BASIN DECHLORINATION PASSIVE SYSTEM
351.	M500	PRODUCT WATER CLEARWELLS INLET PIPING MODIFICATIONS MECHANICAL ORIENTATION PLAN
352.	M501	PRODUCT WATER CLEARWELLS INLET PIPING MODIFICATIONS PLAN VIEW
353.	M502	PRODUCT WATER CLEARWELLS INLET PIPING MODIFICATIONS SECTION VIEW
354.	M503	PRODUCT WATER CLEARWELLS INLET PIPING VALVE VAULT OVERFLOW PIPING MODIFICATIONS
355.	M504	PRODUCT WATER CLEARWELLS OUTLET PIPING MODIFICATIONS DEMOLITION AND LAYOUT
356.	M510	PRODUCT WATER PUMP STATION MECHANICAL PLAN (NOT A PART)
357.	M511	PRODUCT WATER PUMP STATION MECHANICAL SECTIONS (NOT A PART)
358.	M520	PRODUCT WATER METER VAULT PLAN AND SECTION (NOT A PART)
359.	M521	PWP SCP VALVE VAULT PLAN AND SECTION (NOT A PART)
360.	M701	CHEMICAL BUILDING CHLORINE DIOXIDE CHEMICAL SCHEMATIC
361.	M703	CHEMICAL BUILDING PRIMARY COAGULANT CHEMICAL SCHEMATIC
362.	M704	CHEMICAL BUILDING SODIUM HYPOCHLORITE CHEMICAL SCHEMATIC
363.	M705	CHEMICAL BUILDING CAUSTIC SODA CHEMICAL SCHEMATIC
364.	M706	CHEMICAL BUILDING AQUEOUS AMMONIA (AA) CHEMICAL SCHEMATIC
365.	M707	CHEMICAL BUILDING CITRIC ACID CHEMICAL SCHEMATIC
366.	M708	CHEMICAL BUILDING SODIUM BISULFITE CHEMICAL SCHEMATIC
367.	M710	CHEMICAL BUILDING KEY PLAN
368.	M711	CHEMICAL BUILDING MECHANICAL ROOM ENLARGED PLAN AND SECTION
369.	M720	CHEMICAL BUILDING CHLORINE DIOXIDE ENLARGED PLAN AND SECTION
370.	M723	CHEMICAL BUILDING SODIUM CHLORITE ENLARGED PLAN AND SECTION
371.	M724	CHEMICAL BUILDING HYDROCHLORIC ACID ENLARGED PLAN AND SECTION
372.	M730	CHEMICAL BUILDING PRIMARY COAGULANT ENLARGED PLAN AND SECTION
373.	M731	CHEMICAL BUILDING PRIMARY COAGULANT SECTIONS
374.	M740	CHEMICAL BUILDING SODIUM HYPOCHLORITE ENLARGED PLAN AND SECTION
375.	M741	CHEMICAL BUILDING SODIUM HYPOCHLORITE SECTIONS
376.	M750	CHEMICAL BUILDING AQUEOUS AMMONIA ENLARGED PLAN AND SECTION
377.	M751	CHEMICAL BUILDING AQUEOUS AMMONIA SECTIONS
378.	M752	CHEMICAL BUILDING AQUEOUS AMMONIA - SCRUBBER PLAN, SECTION, AND DETAIL
379.	M760	CHEMICAL BUILDING CAUSTIC SODA ENLARGED PLAN AND SECTION
380.	M761	CHEMICAL BUILDING CAUSTIC SODA SECTIONS
381.	M770	CHEMICAL BUILDING CITRIC ACID ENLARGED PLAN AND SECTION
382.	M771	CHEMICAL BUILDING CITRIC ACID SECTIONS
383.	M775	CHEMICAL BUILDING SODIUM BISULFITE ENLARGED PLAN AND SECTION
384.	M776	CHEMICAL BUILDING SODIUM BISULFITE SECTIONS
385.	M780	CHEMICAL BUILDING CHEMICAL METERING PUMP TYPICAL INSTALLATION
386.	M781	CHEMICAL BUILDING TRANSFER PUMP TYPICAL INSTALLATION
387.	M782	CHEMICAL BUILDING MISCELLANEOUS DETAILS I
388.	M783	CHEMICAL BUILDING MISCELLANEOUS DETAILS II

GENERAL

SHEET	DRAWING	DESCRIPTION
389.	G001B	TITLE SHEET - VOLUME II

PLUMBING

SHEET	DRAWING	DESCRIPTION
390.	P201	FOREBAY AND MF PUMP STATION FOUNDATION PLAN
391.	P202	FOREBAY AND MF PUMP STATION PLAN
392.	P301	TREATMENT BUILDING PIPE GALLERY PLAN
393.	P302	TREATMENT BUILDING FOUNDATION PLAN
394.	P303	TREATMENT BUILDING UPPER LEVEL PLAN
395.	P304	TREATMENT BUILDING WASTE & VENT/WATER ISOMETRIC
396.	P701	CHEMICAL BUILDING PLAN
397.	P702	CHEMICAL BUILDING ISOMETRIC

HVAC

SHEET	DRAWING	DESCRIPTION
398.	H001	HVAC NOTES AND LEGEND
399.	H002	HVAC EQUIPMENT SCHEDULES I
400.	H003	HVAC EQUIPMENT SCHEDULES II
401.	H004	HVAC EQUIPMENT SCHEDULES III
402.	H005	HVAC WIRING & CONTROLS I
403.	H006	HVAC WIRING & CONTROLS II
404.	H007	HVAC WIRING & CONTROLS III
405.	H008	HVAC CONTROLS IV
406.	H009	HVAC DETAILS I
407.	H010	HVAC DETAILS II
408.	H011	HVAC DETAILS III
409.	H012	HVAC DETAILS IV

HVAC

SHEET	DRAWING	DESCRIPTION
410.	H013	HVAC PIPING DIAGRAM
411.	H101	FLOW CONTROL FACILITY VENTILATION PLAN, AND SECTION
412.	H102	TRABUCO CANYON WATER DISTRICT PUMP STATION HVAC PLAN
413.	H103	TRABUCO CANYON WATER DISTRICT PUMP STATION - SECTIONS I
414.	H104	TRABUCO CANYON WATER DISTRICT PUMP STATION - SECTIONS II
415.	H201	FOREBAY VENTILATION PLAN
416.	H202	FOREBAY SECTION
417.	H301	TREATMENT BUILDING VENTILATION PLAN
418.	H302	TREATMENT BUILDING DAIKIN SYSTEM PIPING PLAN
419.	H303	TREATMENT BUILDING BOILER ROOM PLAN
420.	H304	TREATMENT BUILDING SECTIONS I
421.	H305	TREATMENT BUILDING SECTIONS II
422.	H501	PRODUCT WATER PUMP STATION VENTILATION PLAN (NOT A PART)
423.	H502	PRODUCT WATER PUMP STATION SECTION (NOT A PART)
424.	H503	PRODUCT WATER CLEARWELLS VENTILATION PLAN
425.	H701	CHEMICAL BUILDING VENTILATION PLAN

ELECTRICAL

SHEET	DRAWING	DESCRIPTION
426.	E001	ELECTRICAL SYMBOLS, NOTES, AND ABBREVIATIONS
427.	E002	FIXTURE SCHEDULE
428.	E003	DUCTBANK DETAILS I
429.	E004	DUCTBANK DETAILS II
430.	E005	ELECTRICAL DETAILS I
431.	E006	ELECTRICAL DETAILS II
432.	E007	ELECTRICAL DETAILS III
433.	E008	ELECTRICAL DETAILS IV
434.	E010	SITE LIGHTING PLAN
435.	E011	OVERALL SITE PLAN 1
436.	E012	OVERALL SITE PLAN 2
437.	E013	SCE INFRASTRUCTURE 1
438.	E014	SCE INFRASTRUCTURE 2
439.	E015	CONSTRUCTION MANAGEMENT / EXISTING STORAGE BUILDING
440.	E016	CHEMICAL FEED SYSTEM VAULTS ELECTRICAL PLAN (NOT A PART)
441.	E017	OVERALL SITE CONDUIT & CABLE SCHEDULES
442.	E018	MAIN SWITCHBOARD SINGLE LINE DIAGRAM
443.	E019	MAIN SWITCHBOARD ELEVATIONS
444.	E020	DOOR ACCESS BLOCK DIAGRAM
445.	E021	SCE INFRASTRUCTURE BLOCK DIAGRAM
446.	E022	ATS, GENERATOR PANEL AND LIGHTING CONNECTION DIAGRAM
447.	E023	LIGHTING CONTROL BLOCK DIAGRAM
448.	E101	FLOW CONTROL FACILITY ELECTRICAL PLAN AND SECTION
449.	E102	FLOW CONTROL FACILITY SCHEMATIC CONTROL DIAGRAM
450.	E103	TCWD PUMP STATION SINGLE LINE DIAGRAM
451.	E104	TCWD PUMP STATION EQUIPMENT ELEVATIONS
452.	E105	TCWD PUMP STATION POWER PLAN
453.	E106	TCWD PUMP STATION LIGHTING & GROUNDING PLAN
454.	E107	TCWD PUMP STATION CONDUIT, CABLE & PANELBOARD SCHEDULE
455.	E108	TCWD PUMP STATION SCHEMATIC CONTROL DIAGRAM (SHEET 1 OF 2)
456.	E109	TCWD PUMP STATION SCHEMATIC CONTROL DIAGRAM (SHEET 2 OF 2)
457.	E201	FEED WATER PUMP STATION SINGLE LINE DIAGRAM 1
458.	E202	FEED WATER PUMP STATION SINGLE LINE DIAGRAM 2
459.	E203	FEED WATER PUMP STATION EQUIPMENT ELEVATIONS
460.	E204	FEED WATER PUMP STATION OVERALL ELECTRICAL PLAN
461.	E205	FEED WATER PUMP STATION OVERALL POWER PLAN
462.	E206	FEED WATER PUMP STATION PUMP ROOM POWER PLAN
463.	E207	FEED WATER PUMP STATION PUMP ROOM SECTION PLAN
464.	E208	FEED WATER PUMP STATION ELECTRICAL ROOM POWER PLAN
465.	E209	FEED WATER PUMP STATION MFWW AREA POWER PLAN
466.	E210	FEED WATER PUMP STATION LIGHTING & GROUNDING PLAN I
467.	E211	FEED WATER PUMP STATION LIGHTING & GROUNDING PLAN II
468.	E212	FEED WATER PUMP STATION HVAC PLAN
469.	E213	FWPS CONDUIT, CABLE & PANELBOARD SCHEDULES I
470.	E214	FWPS CONDUIT, CABLE & PANELBOARD SCHEDULES II
471.	E215	FWPS SCHEMATIC CONTROL DIAGRAM I (SHEET 1 OF 2)
472.	E216	FWPS SCHEMATIC CONTROL DIAGRAM I (SHEET 2 OF 2)
473.	E217	FEED WATER PUMP STATION SCHEMATIC CONTROL DIAGRAM II
474.	E218	FEED WATER PUMP STATION SCHEMATIC CONTROL DIAGRAM III
475.	E219	FEED WATER PUMP STATION SCHEMATIC CONTROL DIAGRAM IV
476.	E301	TREATMENT BUILDING SINGLE LINE DIAGRAM I
477.	E302	TREATMENT BUILDING SINGLE LINE DIAGRAM 2
478.	E303	TREATMENT BUILDING EQUIPMENT ELEVATIONS
479.	E304	TREATMENT BUILDING OVERALL ELECTRICAL PLAN
480.	E305	TREATMENT BUILDING OVERALL POWER PLAN
481.	E306	TREATMENT BUILDING OVERALL POWER SECTION
482.	E307	TREATMENT BUILDING MF FEED RACK ENLARGED PLAN
483.	E308	TREATMENT BUILDING MFWW EQUALIZATION BASIN ENLARGED PLAN
484.	E309	TREATMENT BUILDING ELECTRICAL ROOM ENLARGED PLAN
485.	E310	TREATMENT BUILDING BLOWER/COMPRESSOR ROOM ELECTRICAL ENLARGED PLAN
486.	E311	TREATMENT BUILDING UV DISINFECTION AREA ELECTRICAL ENLARGED PLAN
487.	E312	TREATMENT BUILDING UV DISINFECTION AREA SECTIONS
488.	E313	TREATMENT BUILDING CIP AREA ELECTRICAL ENLARGE PLAN I
489.	E314	TREATMENT BUILDING CIP AREA ELECTRICAL ENLARGED PLAN II
490.	E315	TREATMENT BUILDING CIP AREA SECTION PLAN
491.	E316	TREATMENT BUILDING GROUNDING PLAN
492.	E317	TREATMENT BUILDING LIGHTING PLAN 1
493.	E318	TREATMENT BUILDING LIGHTING PLAN 2

ELECTRICAL

SHEET	DRAWING	DESCRIPTION
494.	E319	TREATMENT BUILDING HVAC & SECURITY PLAN
495.	E320	TREATMENT BUILDING SECURITY PLAN
496.	E321	TREATMENT BUILDING CONDUIT BLOCK DIAGRAM
497.	E322	TREATMENT BUILDING CONDUIT & CABLE SCHEDULES I
498.	E323	TREATMENT BUILDING CONDUIT & CABLE SCHEDULES II
499.	E324	TREATMENT BUILDING CONDUIT & CABLE SCHEDULES III
500.	E325	TREATMENT BUILDING CONDUIT, CABLE & PANELBOARD SCHEDULES
501.	E326	TREATMENT BUILDING SCHEMATIC CONTROL DIAGRAM I
502.	E327	TREATMENT BUILDING SCHEMATIC CONTROL DIAGRAM II
503.	E328	TREATMENT BUILDING SCHEMATIC CONTROL DIAGRAM III
504.	E329	TREATMENT BUILDING SCHEMATIC CONTROL DIAGRAM IV
505.	E330	TREATMENT BUILDING SCHEMATIC CONTROL DIAGRAM V
506.	E331	TREATMENT BUILDING SCHEMATIC CONTROL DIAGRAM VI
507.	E332	TREATMENT BUILDING SCHEMATIC CONTROL DIAGRAM VII
508.	E401	CT BASIN ELECTRICAL PLAN
509.	E501	PRODUCT WATER CLEARWELLS SINGLE LINE DIAGRAM AND SCHEDULES
510.	E502	PRODUCT WATER CLEARWELLS ELECTRICAL PLAN
511.	E503	PRODUCT WATER CLEARWELLS VAULT ELECTRICAL PLAN & SECTION
512.	E504	PRODUCT WATER CLEARWELLS SCHEMATIC CONTROL DIAGRAM
513.	E510	PRODUCT WATER PUMP STATION SINGLE LINE DIAGRAM (NOT A PART)
514.	E511	PRODUCT WATER PUMP STATION EQUIPMENT ELEVATIONS (NOT A PART)
515.	E512	PRODUCT WATER PUMP STATION SITE PLAN (NOT A PART)
516.	E513	PRODUCT WATER PUMP STATION POWER PLAN (NOT A PART)
517.	E514	PRODUCT WATER PUMP STATION LIGHTING & GROUNDING PLAN (NOT A PART)
518.	E515	PRODUCT WATER PUMP STATION PANELBOARD SCHEDULES (NOT A PART)
519.	E516	PRODUCT WATER PUMP STATION SCHEMATIC DIAGRAM I (SHEET 1 OF 2) (NOT A PART)
520.	E517	PRODUCT WATER PUMP STATION SCHEMATIC DIAGRAM I (SHEET 2 OF 2) (NOT A PART)
521.	E518	PRODUCT WATER PUMP STATION SCHEMATIC DIAGRAM II (NOT A PART)
522.	E519	PRODUCT WATER PUMP STATION BLOCK DIAGRAMS (NOT A PART)
523.	E530	PRODUCT WATER SOUTH COUNTY PIPELINE VAULT SINGLE LINE DIAGRAM & ELEVATIONS (NOT A PART)
524.	E531	PRODUCT WATER SOUTH COUNTY PIPELINE VAULT ELECTRICAL PLAN & SECTION (NOT A PART)
525.	E532	PRODUCT WATER SOUTH COUNTY PIPELINE VAULT SCHEMATIC CONTROL DIAGRAM (NOT A PART)
526.	E533	PRODUCT WATER SOUTH COUNTY PIPELINE VAULT VAULT VAULT, CONDUIT, CABLE AND CONTROL PANELBOARD SCHEDULE (NOT A PART)
527.	E701	CHEMICAL BUILDING SINGLE LINE DIAGRAM
528.	E702	CHEMICAL BUILDING EQUIPMENT ELEVATIONS
529.	E703	CHEMICAL BUILDING OVERALL PLAN
530.	E704	CHEMICAL BUILDING OVERALL POWER PLAN
531.	E705	CHEMICAL BUILDING LIGHTING & GROUNDING PLAN
532.	E706	CHEMICAL BUILDING HVAC & SECURITY PLAN
533.	E707	CHEMICAL BUILDING HVAC SYSTEM BLOCK DIAGRAM
534.	E708	CHEMICAL BUILDING CONDUIT & CABLE SCHEDULES I
535.	E709	CHEMICAL BUILDING CONDUIT & CABLE SCHEDULES II
536.	E710	CHEMICAL BUILDING PANELBOARD SCHEDULE
537.	E711	CHEMICAL BUILDING MECHANICAL ROOM POWER PLAN
538.	E712	CHEMICAL BUILDING ELECTRICAL ROOM POWER
539.	E720	CHEMICAL BUILDING CHLORINE DIOXIDE ENLARGED PLAN
540.	E723	CHEMICAL BUILDING SODIUM CHLORITE & HYDROCHLORITE ACID ENLARGED PLAN
541.	E730	CHEMICAL BUILDING PRIMARY COAGULANT ENLARGED PLAN
542.	E740	CHEMICAL BUILDING SODIUM HYPOCHLORITE ENLARGED PLAN
543.	E750	CHEMICAL BUILDING AQUEOUS AMMONIA ENLARGED PLAN
544.	E760	CHEMICAL BUILDING CAUSTIC SODA ENLARGED PLAN
545.	E770	CHEMICAL BUILDING CITRIC ACID ENLARGED PLAN
546.	E775	CHEMICAL BUILDING SODIUM BISULFITE ENLARGED PLAN

INSTRUMENTATION

SHEET	DRAWING	DESCRIPTION
547.	I001	INSTRUMENTATION ABBREVIATIONS & SYMBOLS-1
548.	I002	INSTRUMENTATION ABBREVIATIONS & SYMBOLS-2
549.	I003	INSTRUMENTATION ABBREVIATIONS & SYMBOLS-3
550.	I004	INSTRUMENTATION ABBREVIATIONS & SYMBOLS-4
551.	I005	INSTRUMENTATION PROCESS EQUIPMENT TAGGING
552.	I006	INSTRUMENTATION TYPICAL DETAILS - 1
553.	I007	INSTRUMENTATION TYPICAL DETAILS - 2
554.	I008	INSTRUMENTATION TYPICAL DETAILS - 3
555.	I011	INSTRUMENTATION SCADA BLOCK DIAGRAM - 1
556.	I012	INSTRUMENTATION SCADA BLOCK DIAGRAM - 2
557.	I013	INSTRUMENTATION SCADA BLOCK DIAGRAM - 3
558.	I014	RAW WATER FLOW SCHEMATIC
559.	I015	FOREBAY FLOW SCHEMATIC
560.	I016	TREATMENT BUILDING FLOW SCHEMATIC
561.	I017	TREATED WATER FLOW SCHEMATIC
562.	I018	MFWW FLOW SCHEMATICS
563.	I019	INSTRUMENTATION LOCAL CONTROL PANELS
564.	I020	INSTRUMENTATION INSTRUMENT MOUNTING PANELS - 1
565.	I021	INSTRUMENTATION INSTRUMENT MOUNTING PANELS - 2
566.	I022	INSTRUMENTATION INSTRUMENT MOUNTING PANELS - 3
567.	I023	INSTRUMENTATION INSTRUMENT MOUNTING PANELS - 4
568.	I024	INSTRUMENTATION EXAMPLE LOOP WIRING DIAGRAM - 1
569.	I025	INSTRUMENTATION EXAMPLE LOOP WIRING DIAGRAM - 2
570.	I026	INSTRUMENTATION EXAMPLE LOOP WIRING DIAGRAM - 3
571.	I027	INSTRUMENTATION EXAMPLE POWER MONITOR CONNECTIONS
572.	I041	P&ID POWER MONITORING
573.	I042	P&ID MISCELLANEOUS SIGNALS - 1

INSTRUMENTATION

SHEET	DRAWING	DESCRIPTION
574.	I043	P&ID MISCELLANEOUS SIGNALS - 2
575.	I044	P&ID MISCELLANEOUS SIGNALS - 3
576.	I045	P&ID MISCELLANEOUS SIGNALS - 4
577.	I046	P&ID ENGINE GENERATOR
578.	I047	P&ID SUMP PUMPS - 1
579.	I048	P&ID SUMP PUMPS - 2
580.	I049	P&ID SUMP PUMPS - 3
581.	I050	P&ID POTABLE AND UTILITY WATER
582.	I105	P&ID FLOW CONTROL FACILITY
583.	I106	P&ID TCWD PUMP STATION - 1
584.	I107	P&ID TCWD PUMP STATION - 2
585.	I201	P&ID FOREBAY-1
586.	I202	P&ID FOREBAY-2
587.	I203	P&ID FEED WATER PUMP STATION-1
588.	I204	P&ID FEED WATER PUMP STATION-2
589.	I205	P&ID FEED WATER PUMP STATION-3
590.	I206	P&ID FEED WATER PUMP STATION-4
591.	I207	P&ID STRAINERS-1
592.	I208	P&ID STRAINERS-2
593.	I209	P&ID STRAINERS-3
594.	I210	P&ID FLASH MIX
595.	I301	P&ID UV DISINFECTION REACTOR NO. 1
596.	I302	P&ID UV DISINFECTION REACTOR NO. 2
597.	I303	P&ID UV DISINFECTION REACTORS CIP SYSTEM
598.	I304	P&ID BOILER SYSTEM-1
599.	I305	P&ID BOILER SYSTEM-2
600.	I401	P&ID CT BASIN
601.	I501	P&ID STORAGE RESERVOIRS
602.	I502	P&ID PRODUCT WATER PUMP STATION-1 (NOT A PART)
603.	I503	P&ID PRODUCT WATER PUMP STATION-2 (NOT A PART)
604.	I504	P&ID PRODUCT WATER PUMP STATION-3 (NOT A PART)
605.	I505	P&ID PRODUCT WATER PUMP STATION-4 (NOT A PART)
606.	I601	P&ID MF WASTE WASHWATER EQ BASIN-1
607.	I602	P&ID MF WASTE WASHWATER EQ BASIN-2
608.	I603	P&ID MF WASTE WASHWATER FLASH MIX
609.	I604	P&ID MF WASTE WASHWATER CLARIFIERS-1
610.	I605	P&ID MF WASTE WASHWATER CLARIFIERS-2
611.	I606	P&ID MF WASTE WASHWATER CLARIFIERS-3
612.	I607	P&ID MF WASTE WASHWATER CLARIFIERS-4
613.	I608	P&ID MF WASTE WASHWATER CLARIFIERS-5
614.	I609	P&ID MF WASTE WASHWATER CLARIFIERS-6
615.	I610	P&ID MF WASTE WASHWATER CLARIFIER SLUDGE VALVES
616.	I701	P&ID CHLORINE DIOXIDE FEED SYSTEM
617.	I702	P&ID PRIMARY COAGULANT FEED SYSTEM-1
618.	I703	P&ID PRIMARY COAGULANT FEED SYSTEM-2
619.	I704	P&ID PRIMARY COAGULANT FEED SYSTEM-3
620.	I705	P&ID SODIUM HYPOCHLORITE FEED SYSTEM-1
621.	I706	P&ID SODIUM HYPOCHLORITE FEED SYSTEM-2
622.	I707	P&ID SODIUM HYPOCHLORITE FEED SYSTEM-3
623.	I708	P&ID CAUSTIC SODA FEED SYSTEM-1
624.	I709	P&ID CAUSTIC SODA FEED SYSTEM-2
625.	I710	P&ID CAUSTIC SODA FEED SYSTEM-3
626.	I711	P&ID AQUEOUS AMMONIA FEED SYSTEM-1
627.	I712	P&ID AQUEOUS AMMONIA FEED SYSTEM-2
628.	I713	P&ID CITRIC ACID FEED SYSTEM-1
629.	I714	P&ID CITRIC ACID FEED SYSTEM-2
630.	I715	P&ID SODIUM BISULFITE FEED SYSTEM-1
631.	I716	P&ID SODIUM BISULFITE FEED SYSTEM-2
632.	I717	P&ID CHEMICAL CLEANING TRANSFER PUMP AIR SYSTEM

FILENAME: 6232-G004.dwg LAST UPDATED: 01/23/2012 11:00 AM LAST SAVED BY: aretana

No.	DATE	REVISIONS	APPROVED

DESIGNED: CBH
DRAWN: DDT
CHECKED: CLM

RBF CONSULTING

carollo

IRVINE RANCH WATER DISTRICT

COREY HESS	RCE NO. 68499	PROJECT ENGINEER	DATE
CINDY MILLER	RCE NO. 58116	PROJECT MANAGER	DATE
PATRICIA UEMATSU	RCE NO. 36762	PRINCIPAL ENGINEER	DATE

IRVINE RANCH WATER DISTRICT
BAKER WATER TREATMENT PLANT
PROJECT NO. 11218

LIST OF DRAWINGS II

DRAWING **G004**

SHEET **4** OF **632**

ABBREVIATIONS

NOTE: DISCIPLINE SPECIFIC ABBREVIATIONS ARE ALSO PROVIDED FOR ARCHITECTURAL (A001), ELECTRICAL (E001), AND INSTRUMENTATION I002.

AA	AQUEOUS AMMONIA
AB	AGGREGATE BASE
AC	ASPHALT CONCRETE
ACP	ASPHALT CONCRETE PAVEMENT
AD	AREA DRAIN
ADJ	ADJUSTABLE
AL	ALUMINUM
ALT	ALTERNATE
AMP	ALLEN McCOLLOCH PIPELINE
ANT	ANTENNA
AP	ANGLE POINT
APPROX	APPROXIMATE
APVD	APPROVED
ARCH	ARCHITECTURAL
ASSY	ASSEMBLY
ATS	AUTOMATIC TRANSFER SWITCH
AWWA	AMERICAN WATER WORKS ASSOCIATION
B & S	BELL AND SPIGOT
BC	BEGIN CURVE
BCR	BEGIN CURVE RETURN
BD	BOTTOM DRAIN
BDRY	BOUNDARY
BE	BEVEL END
BF	BLIND FLANGE
BFP	BACK FLOW PREVENTER
BLDG	BUILDING
BLT	BOLT
BM	BENCH MARK
BO	BLOW-OFF ASSEMBLY
BOP	BOTTOM OF PIPE
BOT	BOTTOM
BP	BYPASS
BPL	BAKER PIPELINE
BS	BUTT STRAP
BVC	BEGIN VERTICAL CURVE
BWV	BACK WATER VALVE
C & G	CURB AND GUTTER
CA	CITRIC ACID
CA	CONCRETE ANCHOR
CAB	CRUSHED AGGREGATE BASE
CB	CATCH BASIN
CCP	CONCRETE CYLINDER PIPE
CDO	CHLORINE DIOXIDE
CEB	CHEMICAL ENHANCED BACKWASH
CEM	CEMENT
CF	CURB FACE
CHKD PL	CHECKERED PLATE
CI	CAST IRON
CIP	CLEAN IN PLACE
CIPAF	CLEAN IN PLACE ACID FEED
CIPAR	CLEAN IN PLACE ACID RETURN
CIPCF	CLEAN IN PLACE CAUSTIC FEED
CIPCR	CLEAN IN PLACE CAUSTIC RETURN
CIPP	CAST IN PLACE
CJ	CARNEGIE JOINT
CL	CLASS OR CENTERLINE
CLG	CEILING
CLR	CLEAR
CLW	CLEAR WATER WASTE
CMC	CEMENT MORTAR COATING
CML&C	CEMENT MORTAR LINED & COATED
CMP	CORRUGATED METAL PIPE
CMU	CONCRETE MASONRY UNIT
CNCTRC	CONCENTRIC
CO	CLEANOUT
CONC	CONCRETE
CONN	CONNECTION
CONST	CONSTRUCTION
CONT	CONTINUED
COORD	COORDINATE
COP	COPPER
CPLG	COUPLING
CS	CARBON STEEL
CS	CAUSTIC SODA
C TO C	CENTER TO CENTER
CT	CONTACT TIME
CTF	CUT TO FIT IN FIELD
CTR	CENTER
CTV	CABLE TELEVISION
CTX	COAL TAR EPOXY
CU	CUBIC
CW	COLD WATER
CY	CUBIC YARD
DAFT	DISSOLVED AIR FLOTATION THICKENER
D	DRAIN
DI	DUCTILE IRON
DIP	DUCTILE IRON PIPE
DIA	DIAMETER
DIAG	DIAGONAL
DIAPH	DIAPHRAGM
DISC	DISCONNECT
DISCH	DISCHARGE
DPW	DECARBONATED PRODUCT WATER
DR	DRAIN
DW	DOMESTIC WATER
DWG	DRAWING
DWY	DRIVEWAY
E	EAST
EA	EACH
EB	EXPANSION BOLT (ANCHOR)
EC	END CURVE
ECC	ECCENTRIC
ECR	END CURB RETURN
EF	EXHAUST FAN
EFF	EFFLUENT SUPPLY
EG	EDGE OF GUTTER, OR EXISTING GRADE
EJ	EXPANSION JOINT
EL	ELEVATION
ELB	ELBOW
EMBED	EMBEDMENT
EP	EDGE OF PAVEMENT
EQPT	EQUIPMENT
ESMT	EASEMENT
EVC	END VERTICAL CURVE
EW	EYEWASH
EX	EXISTING
EXP	EXPANSION
FC	FERRIC CHLORIDE
FC	FLEXIBLE COUPLING
FCA	FLANGE COUPLING ADAPTER
FCF	FLOW CONTROL FACILITY
FCO	FLOOR CLEANOUT
FD	FLOOR DRAIN
FDC	FIRE DEPARTMENT CONNECTION
FDN	FOUNDATION
FE	FLANGED END/ FLOW ELEMENT
FF	FINISHED FLOOR
FG	FINISHED GRADE
FH	FIRE HYDRANT
FIG	FIGURE
FL	FLOW LINE
FLG	FLANGED
FLW	FILTERED WATER
FPS	FIRE PROTECTION SYSTEM
FS	FINISHED SURFACE
FT	FEET
FTG	FOOTING
FW	FIELD WELD
FX	FUSION EPOXY
FXF	FLANGE BY FLANGE
GA	GAGE, GAUGE
GAL	GALLONS
GALV	GALVANIZED
GM	GAS METER
GPD	GALLONS PER DAY
GPH	GALLONS PER HOUR
GPM	GALLONS PER MINUTE
GR	GRADE, GROUND
GRC	GRADE BREAK, GRADE CHANGE
GRTG	GRATING
GS OR GSP	GALVANIZED STEEL, GALVANIZED STEEL PIPE
H/P	PIPE HIGH POINT
HB	HOSE BIBB
HCL	HYDROCHLORIC ACID
HDR	HEADER
HEX	HEXAGONAL OR HEAT EXCHANGER
HGT	HEIGHT
HH	HAND HOLE
HORIZ	HORIZONTAL
HP	HORSEPOWER
HR	HANDRAIL
HSS	HOLLOW STEEL STRUCTURAL MEMBER
HW	HOT WATER
HWL	HIGH WATER LEVEL
HWR	HOT WATER RETURN
HWS	HOT WATER SUPPLY
HVAC	HEATING, VENTILATING AND AIR CONDITIONING
ID	INSIDE DIAMETER
IE	INVERT ELEVATION
ILP	IRVINE LAKE PIPELINE
INF	INFLUENT SUPPLY
INFL	INFLUENT
INV	INVERT ELEVATION
IP	IRON PIPE
LB(S)	POUND(S)
LPG	LIQUID PROPANE GAS
LR	LONG RADIUS
MAX	MAXIMUM
MCC	MOTOR CONTROL CENTER
MFWW	MEMBRANE FILTRATION WASTE WASHWATER
MFWWT	MEMBRANE FILTRATION WASTE WASHWATER TREATMENT
MF	MICROFILTRATION
MG	MILLION GALLONS
MGD	MILLION GALLONS PER DAY
MH	MANHOLE
MISC	MISCELLANEOUS
MIN	MINIMUM
MON	MONUMENT
MOT	MOTOR
MOV	MOTOR OPERATED VALVE
MPG	MEDIUM PRESSURE GAS
MWD	METROPOLITAN WATER DISTRICT
N	NORTH
NIC	NOT IN CONTRACT
NO	NUMBER
NPS	NOMINAL PIPE SIZE (FORMERLY I.P.S.)
NPT	NATIONAL PIPE THREAD
NRW	NON-RECLAIMABLE WASTEWATER
NTS	NOT TO SCALE
OC	ON CENTER
OD	OUTSIDE DIAMETER
OF	OVERFLOW
OPNG	OPENING
PA	PLANT AIR
PAVMT	PAVEMENT
PC	POINT OF CURVATURE
PC	PRIMARY COAGULANT
PCC	PORTLAND CEMENT CONCRETE
PCR	PERMEATE CLEANING RETURN
PE	PLAIN END
PEF	PRIMARY EFFLUENT
PI	POINT OF INTERSECTION,
PL	PROPERTY LINE, PLATE (STEEL OR ALUMINUM)
PP	POWER POLE
PRV	PRESSURE RELIEF VALVE
PS	PUMP STATION
PSI	POUNDS PER SQUARE INCH
PSF	POUNDS PER SQUARE FOOT
PVC	POLYVINYL CHLORIDE, POINT OF VERTICAL CURVATURE
PVCP	POLYVINYL CHLORIDE PIPE
PVMT	PAVEMENT
PVT	POINT OF VERTICAL TANGENCY
PW	PRODUCT WATER
PWR	POWER
R	RADIUS
RC OR RCP	REINFORCED CONCRETE, REINFORCED CONCRETE PIPE
RDCR	REDUCER
REQD	REQUIRED
REW	RECYCLED WATER
ROW	RIGHT OF WAY
RPM	REVOLUTIONS PER MINUTE
RW	RAW WATER
S/W	SIDEWALK
SA	SAMPLE, SERVICE AIR
SB	SODIUM BISULFITE
SC	SODIUM CHLORITE
SCE	SOUTHERN CALIFORNIA EDISON
SCHD	SCHEDULE
SD	STORM DRAIN
SDR	STANDARD DIMENSION RATIO
SH	SODIUM HYPOCHLORITE
SIM	SIMILAR
SPECS	SPECIFICATIONS
SQ	SQUARE
SR	SHORT RADIUS
SS	SANITARY SEWER
SS OR SST	STAINLESS STEEL
STA	STATION
STD	STANDARD
STL	STEEL
STRUCT	STRUCTURAL
TAN	TANGENT
TBA	TO BE ABANDONED
TBD	TO BE DEMOLISHED
TBM	TEMPORARY BENCH MARK
TC	TOP OF CURB
TCWD	TRABUCO CANYON WATER DISTRICT
TD	TANK DRAIN
TDH	TOTAL DYNAMIC HEAD
TEL	TELEPHONE
TEMP	TEMPERATURE
TF	TOP OF FOOTING
TOS	TOP OF SLAB
TOW	TOP OF WALL
TP	TELEPHONE POLE
TSL	THICKENED SLUDGE
TST	TOTAL SUSPENDED SOLIDS
TW	TREATED WATER OR TOP OF WALL
TYP	TYPICAL
UBC	UNIFORM BUILDING CODE
UMC	UNIFORM MECHANICAL CODE
UV	ULTRAVIOLET
UW	UTILITY WATER
VB	VALVE BOX
VC	VERTICAL CURVE
VERT	VERTICAL
VFD	VARIABLE FREQUENCY DRIVE
VGB	VERTICAL GRADE BREAK
VSD	VARIABLE SPEED DRIVE
VTR	VENT THROUGH ROOF
WCO	WALL CLEANOUT
WM	WATER METER
WS	WATER SURFACE
WSP	WELDED STEEL PIPE
WT	WEIGHT
WTR	WATER
WWM	WELDED WIRE MESH
XSEC	CROSS SECTION

SOC WMA

SECTION AND DETAIL NUMBERING SYSTEM

SECTION CUT ON PLAN

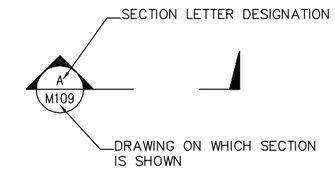

SECTION SHOWN

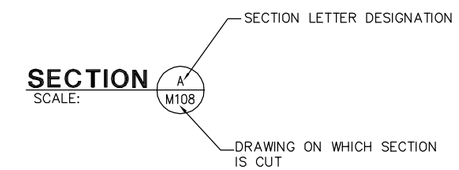

DETAIL NUMBERING SYSTEM

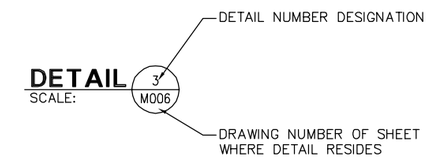

NOTES

1. DETAIL NUMBERING IS IDENTICAL, EXCEPT NUMBER DESIGNATION ARE USED IN LIEU OF LETTERS.
2. "VAR" IN DRAWING DESIGNATION AREA INDICATES DETAIL APPLIES TO MORE THAN ONE DRAWING.
3. "–" IN DRAWING AREA INDICATES THAT SECTION OR DETAIL IS SHOWN ON THE SAME DRAWING THAT IT IS CUT FROM OR REFERRED TO.

FILENAME: 6232-G005.dwg LAST UPDATED: 01/23/2012 02:54 PM LAST SAVED BY: ewalker

No.	DATE	REVISIONS	APPROVED

DESIGNED: CBH
DRAWN: DDT
CHECKED: CLM

RBF CONSULTING

carollo

IRVINE RANCH WATER DISTRICT

COREY HESS	RCE NO. 68499	PROJECT ENGINEER	DATE
CINDY MILLER	RCE NO. 58116	PROJECT MANAGER	DATE
PATRICIA UEMATSU	RCE NO. 36762	PRINCIPAL ENGINEER	DATE

IRVINE RANCH WATER DISTRICT
BAKER WATER TREATMENT PLANT
PROJECT NO. 11218

ABBREVIATION LIST, SECTION AND DETAIL NUMBERING SYSTEM

DRAWING G005

GENERAL NOTES:

1. ALL WORK SHALL BE IN ACCORDANCE WITH THE LATEST EDITION OF THE STANDARD SPECIFICATIONS FOR PUBLIC WORKS CONSTRUCTION AND CONFORM TO THE DISTRICT'S "PROCEDURAL GUIDELINES AND GENERAL DESIGN REQUIREMENTS" AND "CONSTRUCTION MANUAL", AS LAST REVISED.
2. THE CONTRACTOR WORKING ON IRWD WATERLINES AND SEWERLINES MUST HAVE A C-34 LICENSE OR A CLASS A GENERAL CONTRACTORS LICENSE.
3. THE CONTRACTOR SHALL HAVE COPIES OF THE PLANS AND SPECIFICATIONS ON THE SITE AT ALL TIMES.
4. THE DISTRICT ENGINEERING OFFICE SHALL BE CALLED FOR INSPECTION FOUR (4) WORKING DAYS BEFORE START OF WORK AT (949) 453-5300 OR (949) 453-5615.
5. A PRE-CONSTRUCTION CONFERENCE OF REPRESENTATIVES FROM AFFECTED AGENCIES AND THE CONTRACTOR SHALL BE HELD ON THE JOB SITE 48-HOURS PRIOR TO START OF WORK.
6. CONTRACTOR MUST COMPLY WITH ALL REQUIREMENTS OF THE N.P.D.E.S. STORM WATER DISCHARGE PERMIT, INCLUDING ANY MONITORING PROGRAM.
7. DAMAGE TO EXISTING UTILITIES, STRUCTURES, PAVEMENT, LANDSCAPED AREAS, AND IRRIGATION SYSTEMS AS A RESULT OF CONSTRUCTION OR CONSTRUCTION ACCESS, WILL BE REQUIRED TO BE REPAIRED OR REPLACED SAME IN KIND, AS DIRECTED BY THE DISTRICT, CITY OF LAKE FOREST, OR UTILITY AGENCY.
8. LOCATIONS OF EXISTING UTILITIES SHOWN ON THE PLANS ARE BASED ON EXISTING RECORDS. IT IS THE CONTRACTOR'S RESPONSIBILITY TO CONTACT UNDERGROUND SERVICE ALERT OF SOUTHERN CALIFORNIA (800) 422-4133 TO FIELD VERIFY.
9. CONTRACTOR TO POTHOLE EXISTING WATER MAINS AND UTILITIES TO VERIFY LOCATION, SIZE AND TYPE BEFORE SUBMITTING LAY DRAWINGS.
10. THE CONTRACTOR SHALL IDENTIFY AND OBTAIN ALL CITY / COUNTY ENCROACHMENT PERMITS NECESSARY FOR WORK ON LAND NOT OWNED BY IRVINE RANCH WATER DISTRICT.
11. CONTRACTOR SHALL MINIMIZE CONSTRUCTION NOISE, AND FOLLOW CITY OF LAKE FOREST AND COUNTY OF ORANGE NOISE REQUIREMENTS.
12. THE WALL AND FACE OF ALL TRENCHES GREATER THAN FIVE (5) FEET SHALL BE EFFECTIVELY GUARDED BY A SHORING SYSTEM. EXCAVATIONS LESS THAN FIVE (5) FEET SHALL BE SHORED WHEN EXAMINATION INDICATES A POTENTIAL FOR HAZARDOUS GROUND MOVEMENT.
13. THE CONTRACTOR SHALL OBTAIN PERMITS FROM CAL-OSHA.
14. SURPLUS OR MATERIAL REMOVED THAT IS NOT SUITABLE FOR USE IN THE PROJECT SHALL BECOME THE PROPERTY OF THE CONTRACTOR AND SHALL BE DISPOSED OF AWAY FROM THE JOB SITE IN A MANNER AND LOCATION ACCEPTABLE TO ALL GOVERNING AGENCIES.
15. THE CONTRACTOR TO PROVIDE A FULL VIDEO TAPE OF THE SITES INCLUDING CULTURE PRIOR TO THE START OF CONSTRUCTION, INCLUDING DIGITAL STILL PHOTOS AT KEY LOCATIONS.
16. THE CONTRACTOR TO MAINTAIN ACCESS TO AND AROUND EXISTING ON-SITE DOMESTIC AND NON-POTABLE WATER RESERVOIRS AND PUMP STATIONS, AND ALL OTHER ON-SITE FACILITIES OR VAULTS BY OTHER AGENCIES (INCLUDING SCE, MWD AND TCWD).

IRWD WATER NOTES:

1. ALL MAIN LINE VALVES SHALL BE MAINTAINED SO AS TO BE ACCESSIBLE DURING CONSTRUCTION, AND ALL VALVE STEM TOPS HAVING OVER 48-INCHES OF COVER WILL REQUIRE AN EXTENSION AS PER IRWD STANDARD DRAWING W-23.
2. NO TAPS OR OTHER CONNECTIONS SHALL BE MADE TO EXISTING DISTRICT WATER MAINS PRIOR TO CONDUCTING AN APPROVED PRESSURE TEST ON THE NEW WATER DISTRIBUTION SYSTEM. TAPPING SLEEVES SHALL BE PRESSURE TESTED IN AN APPROVED MANNER IN THE FIELD, IN THE PRESENCE OF THE DISTRICT INSPECTOR, PRIOR TO TAPPING THE MAIN LINE. TAPPING OF THE MAIN LINE SHALL NOT PROCEED UNLESS A DISTRICT INSPECTOR IS PRESENT.
3. WHERE METERS AND METER BOXES ARE LOCATED WITHIN SLOPES, THE ANGLE METER STOPS SHALL BE SO LOCATED THAT THE METERS AND BOXES WILL BE PARALLEL AND FLUSH, RESPECTIVELY, WITH THE FINISHED SURFACE.
4. CURBS SHALL BE INSCRIBED BY USE OF A 4" GRINDER WITH TIE DOWNS FOR ALL VALVE LOCATIONS.
5. THE CONTRACTOR SHALL EXPOSE ALL JOIN POINTS TO THE EXISTING DOMESTIC WATER SYSTEM FOR VERIFICATION OF HORIZONTAL AND VERTICAL LOCATION BEFORE CONSTRUCTION.
6. FINAL INSPECTION FOR WATERLINES MUST INCLUDE WATER SAMPLES THAT WILL BE TESTED FOR CONDUCTIVITY, TURBIDITY AND ODOR. THE TURBIDITY MUST BE LESS THAN 2.5 NTU AND THE ODOR MUST BE LESS THAN 1.0 TON, NOT TO INCLUDE CHLORINE ODOR, TO BE ACCEPTABLE.
7. CONTRACTOR SHALL OBTAIN AND SHOW PROOF OF A DEWATERING PERMIT FROM THE STATE OF CALIFORNIA, REGIONAL WATER QUALITY CONTROL BOARD PRIOR TO THE START OF CONSTRUCTION.
8. ALL BFV'S 12" & LARGER SHALL BE TESTED AFTER THE OPERATORS ARE INSTALLED AND BEFORE THEY ARE USED FOR CONSTRUCTION
   ALL TESTS SHALL BE WITNESSED BY AN IRWD INSPECTOR.
   TEST PRESSURE: CL 150 = 150 psi, CL 250 = 250 psi

IRWD SEWER NOTES:

1. THE CONTRACTOR SHALL EXPOSE ALL JOIN POINTS TO THE EXISTING SEWER SYSTEM FOR VERIFICATION OF LOCATION AND ELEVATION BEFORE CONSTRUCTION.
2. ALL LATERALS ARE TO BE STAKED BY A SURVEYOR BEFORE TRENCHING AND A COMPLETE SET OF CUT SHEETS SUPPLIED TO THE DISTRICT INSPECTOR.
3. ALL SEWER MANHOLE LIDS ARE TO HAVE "IRWD" CAST THEREON PER STD DWG S-1.
4. THE DISTRICT WILL INSPECT AND TEST THE SEWER COLLECTION SYSTEM AND LATERAL SEWERS TO THE PROPERTY CLEAN-OUT. PRIVATELY OWNED SEWER LATERALS FROM THE PROPERTY LINE CLEAN-OUT WILL BE INSPECTED AND TESTED BY THE CITY OF IRVINE OR OTHER APPROPRIATE AGENCIES IF OUTSIDE THE CITY OF IRVINE.
5. INFILTRATION AND AIR TESTING OF SEWER LINES SHALL BE IN ACCORDANCE WITH THE DISTRICT'S "PROCEDURAL GUIDELINES AND GENERAL DESIGN REQUIREMENTS" AND "CONSTRUCTION MANUAL" AS LAST REVISED.
6. ALL SEWER LINES SHALL BE BALLED IN THE PRESENCE OF THE DISTRICT INSPECTOR BEFORE COMPLETION OF ALL LEAKAGE TESTS. REV. 8/1/97.
7. PIPELINE LEAKAGE TESTS SHALL BE MADE IN THE PRESENCE OF THE DISTRICT INSPECTOR, ONLY AFTER BACKFILL HAS BEEN COMPLETED, COMPACTION TESTS ON BACKFILL HAVE BEEN MADE, AND THE BACKFILL HAS BEEN ACCEPTED BY THE DISTRICT INSPECTOR.
8. ALL SEWER MAIN LINES 6-INCHES AND LARGER ARE TO BE INSPECTED BY THE DISTRICT USING A CLOSED CIRCUIT TELEVISION SYSTEM. A VIDEO TAPE RECORDING WILL BE MADE OF THE INSPECTION.
9. THE CONTRACTOR IS TO PROVIDE THE DISTRICT WITH AN AS-BUILT SET OF JOB PRINTS WITH TIE-DOWN MEASUREMENTS FOR ALL LATERALS AND MANHOLES.

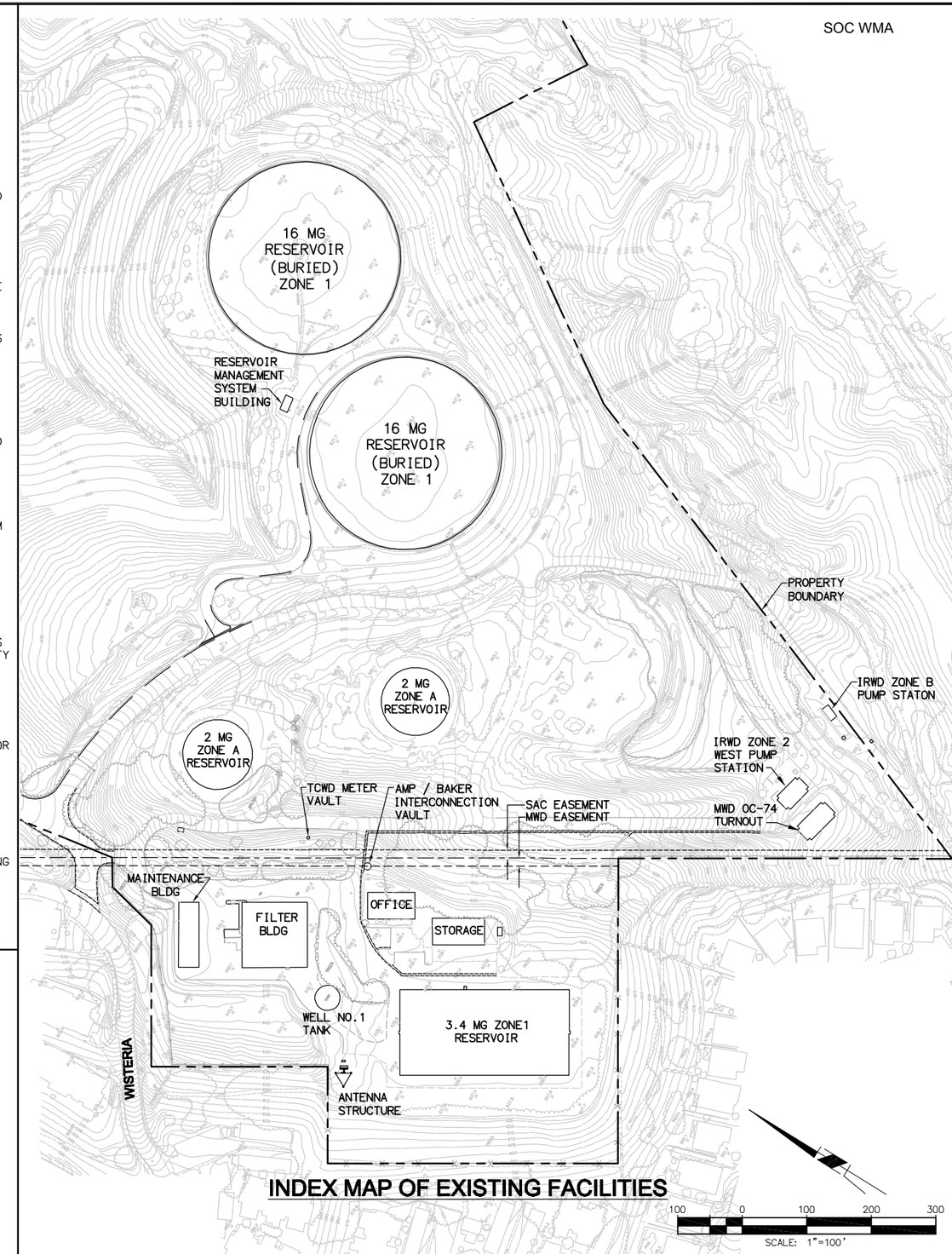

INDEX MAP OF EXISTING FACILITIES

UTILITY AND AGENCY INDEX

IRWD USA	(949) 453-5611
IRVINE RANCH WATER DISTRICT (IRWD)	(949) 453-5300
IRWD INSPECTION	(949) 453-5615
CITY OF LAKE FOREST	(949) 461-3530
COUNTY OF ORANGE (INSPECTION)	(949) 834-3558
COX COMMUNICATIONS	(949) 546-2825
SOUTHERN CALIFORNIA GAS COMPANY	(714) 666-5750
SOUTHERN CALIFORNIA EDISON CO. (DISTRIBUTION)	(949) 859-5253
SOUTHERN CALIFORNIA EDISON CO. (TRANSMISSION)	(949) 973-5406
METROPOLITAN WATER DISTRICT OF SOUTHERN CALIFORNIA	(714) 577-5084
*UNDERGROUND SERVICE ALERT	(800) 422-4133

LEGAL DESCRIPTION

PARCEL MAP NO. 89-218

IN THE CITY OF LAKE FOREST (UNINCORPORATED TERRITORY OF THE COUNTY OF ORANGE AT TIME OF ISSUANCE), STATE OF CALIFORNIA

BEING A SUBDIVISION OF PORTIONS OF LOT 10, RANCHO CANADA DE LOS ALISOS, PER MAP RECORDED IN BOOK 3,PAGES 290 AND 291 OF MISCELLANEOUS RECORDS OF LOS ANGELES COUNTY, CALIFORNIA, IN ORANGE COUNTY, CALIFORNIA.

BENCH MARK:

BENCHMARK

Elevations as shown hereon are in terms of the North American Vertical Datum of 1988 (NAVD88) based locally upon the following Benchmark as published by the County of Orange:

Name		NAVD88 Elev. (ft.)	Year Leveled
2299	OCS BM 3E-122-99*	495.23	2004

* Located on the south corner of the intersection of Lake Forest Dr. and Trabuco Rd.

BASIS OF BEARINGS:

BASIS OF COORDINATES

Bearings and coordinates as shown hereon are in terms of the California Coordinate System of 1983 (CCS83, Epoch 1991.35), Zone 6; based locally upon the following Control Stations as published by the County of Orange:

Name		Northing (ft.) - GRID	Easting (ft.) - GRID	(NAVD88) Ellipse Ht. (ft.)
6730	OCS 6730	2184448.31	6123987.42	--
6745	OCS 6745	2185699.33	6127240.18	461.18

All coordinates and distances are in terms of the U.S. Survey Foot (1 meter = 39.37/12 feet)

No.	DATE	REVISIONS	APPROVED

DESIGNED: CBH
DRAWN: DDT
CHECKED: CLM

RBF CONSULTING

carollo

IRVINE RANCH WATER DISTRICT

COREY HESS	RCE NO. 68499	PROJECT ENGINEER	DATE
CINDY MILLER	RCE NO. 58116	PROJECT MANAGER	DATE
PATRICIA UEMATSU	RCE NO. 36762	PRINCIPAL ENGINEER	DATE

IRVINE RANCH WATER DISTRICT
BAKER WATER TREATMENT PLANT
PROJECT NO. 11218

INDEX MAP, STANDARD NOTES, UTILITY AGENCY INDEX SECTION AND NUMBERING

DRAWING G006

FILENAME: 6232-G006.dwg
LAST UPDATED: 01/17/2012 01:35 PM
LAST SAVED BY: chess

DESCRIPTION	UNITS	CRITERIA
PLANT CAPACITY		
DESIGN CAPACITY	MGD	28
MINIMUM PRODUCTION CAPACITY	MGD	7
PLANT HYDRAULIC CAPACITY	MGD	35
RAW WATER PUMPS		
TYPE: VERTICAL TURBINE		
NUMBER OF PUMPS	NO.	3
NUMBER OF REDUNDANT PUMPS	NO.	1
CAPACITY, EACH	GPM	12,010
TDH	FT OF WATER	120
MOTOR SIZE	HP	450
TCWD PUMPS		
TYPE: VERTICAL TURBINE		
NUMBER OF PUMPS	NO.	3
NUMBER OF REDUNDANT PUMPS	NO.	1
CAPACITY, EACH	GPM	1,350
TDH	FT OF WATER	86
MOTOR SIZE	HP	40
MF FEED WATER CHLORINE DIOXIDE CONTACTOR AND FOREBAY		
TYPE: PARTIALLY BURIED CONCRETE		
NUMBER OF TRAINS (14.1 MGD CAPACITY EACH)	NO.	2
CONTACT CHAMBER VOLUME, EACH	GAL	105,000
MINIMUM CONTACT TIME, EACH CHAMBER AT 14.1 MGD	MIN	10
EQUALIZATION CHAMBER VOLUME, EACH	GAL	250,000
SURGE VOLUME, EACH	GAL	37,500
MF FEED WATER PUMPS		
TYPE: VERTICAL TURBINE WITH VFD		
NUMBER OF PUMPS	NO.	6
NUMBER OF REDUNDANT PUMPS	NO.	1
CAPACITY, EACH	GPM	4,900
TDH	FT OF WATER	140
MOTOR SIZE	HP	300
PRESSURIZED STRAINERS		
TYPE: AUTOMATIC BACKWASHING WEAVE WIRE SCREENS		
FILTRATION DEGREE	MICRONS	250
NUMBER OF STRAINERS	NO.	3
NUMBER OF REDUNDANT STRAINERS	NO.	1
STRAINER CAPACITY (EACH)	GPM	12,150
MINIMUM FEED PRESSURE FOR BACKWASHING	PSI	25
COAGULANT FLASH MIX		
FLASH MIX TYPE: PUMP DIFFUSION		
PUMP TYPE: END SUCTION CENTRIFUGAL		
NUMBER OF PUMPS	NO.	1
MOTOR SIZE	HP	15
MIXING ENERGY	sec−1	750
PRESSURIZED MEMBRANE SYSTEM		
TYPE: POLYMERIC HOLLOW FIBER MICROFILTRATION OR ULTRAFILTRATION		
OPERATING STRATEGY: DEAD END FLOW WITH CROSS FLOW (XR) CAPABILITY		
SYSTEM CONFIGURATION		
NUMBER OF MEMBRANE RACKS	NO.	14
NUMBER OF REDUNDANT MEMBRANE RACKS	NO.	2
RACK CONFIGURATION		
NO OF INSTALLED MODULES PER RACK	NO.	116
NO OF BLANK MODULES SLOTS PER RACK	NO.	18

DESCRIPTION	UNITS	CRITERIA
FLUX		
FLUX AT DESIGN CAPACITY, NORMAL OPERATION	GFD	42
MAXIMUM FLUX AT DESIGN CAPCITY, IN FOREBAY LEVEL CONTROL MODE	GFD	50
RECOVERY		
MINIMUM	PERCENT	95.0
PROCESS VALVES		
TYPE: PNEUMATIC ACTUATED BUTTERFLY VALVES		
AIR SUPPLY SOURCE: ROTARY SCREW COMPRESSOR		
NO. OF COMPRESSORS	NO.	2
MOTOR SIZE	HP	7.5
COMPRESSOR CAPACITY	CFM	26
DISCHARGE PRESSURE	PSI	160
MEMBRANE BACKWASH (REVERSE FLOW)		
TYPE: SIMULTANEOUS REVERSE FLOW WITH AIR SCOUR, FOLLOWED BY FEED SIDE FLUSH		
FILTRATE VOLUME PRODUCTION BETWEEN BACKWASHES	GAL	52,000
BACKWASH INTERVAL PER RACK 50 GFD (MIN)	MINUTES	24
BACKWASH INTERVAL PER RACK 42 GFD (MIN)	MINUTES	28
BACKWASH SUPPLY FLOW RATE (WATER)	GPM	928
BACKWASH SUPPLY FLOW RATE (AIR)	SCFM	348
VOLUME OF WASTEWASHWATER PRODUCED PER BACKWASH	GAL	1,624
REVERSE FLOW PUMPS		
TYPE: END SUCTION CENTRIFUGAL WITH VFD		
NO. OF PUMPS	NO.	2
MOTOR SIZE	HP	25
TDH	FT	70
FLOW	GPM	1,072
AIR SCOUR BLOWERS		
TYPE: ROTARY LOBE WITH VFD		
NO. OF BLOWERS	NO.	2
MOTOR SIZE	HP	50
DISCHARGE PRESSURE	PSI	13
FLOW	SCFM	402
MEMBRANE CHEMICAL CLEANING		
MAKE UP WATER: SOFTENED UTILITY WATER; HEATED IN BOILER		
CLEAN IN PLACE		
TYPE: SEQUENTIAL CAUSTIC/CHLORINE AND CITRIC ACID CYCLES AT 80 DEGREES F		
INTERVAL (MINIMUM)	DAYS	30
CIP SOLUTION STORAGE		
TYPE: FRP TANK		
NO. OF TANKS	NO.	2
VOLUME (EACH)	GAL	3,750
CIRCULATION PUMPS (TWO AT CAUSTIC CIP TANK, ONE AT ACID CIP TANK)		
TYPE: IN−LINE CENTRIFUGAL		
NO. OF PUMPS	NO.	3
MOTOR SIZE	HP	15
FLOW	GPM	434
DRAIN PUMPS (TWO AT CAUSTIC CIP TANK, ONE AT ACID CIP TANK)		
TYPE: IN−LINE CENTRIFUGAL		
NO. OF PUMPS	NO.	3
MOTOR SIZE	HP	7.5
FLOW	GPM	310
CHEMICALLY ENHANCED BACKWASH		
TYPE: CAUSTIC/CHLORINE AT 86 DEGREES F		
INTERVAL (MINIMUM)	DAYS	1
CEB (EFM) SOLUTION STORAGE		
TYPE: FRP TANK, USES CAUSTIC CIP TANK		
CIRCULATION PUMPS − UTILIZES CAUSTIC CIP SYSTEM CIRCULATION PUMPS		
DRAIN PUMPS − UTILIZES CAUSTIC CIP DRAIN PUMPS		

FILENAME:8127A10−6232−G007.dwg
LAST UPDATED: 01/06/2012 10:30 AM
LAST SAVED BY: trea

No.	DATE	REVISIONS	APPROVED

DESIGNED: DAH
DRAWN: RCM
CHECKED: TSD

RBF CONSULTING
carollo
IRVINE RANCH WATER DISTRICT

JIM MEYERHOFER	RCE NO. 48451	PROJECT MANAGER	DATE
CINDY MILLER	RCE NO. 58116	PROJECT MANAGER	DATE
PATRICIA UEMATSU	RCE NO. 36762	PRINCIPAL ENGINEER	DATE

IRVINE RANCH WATER DISTRICT
BAKER WATER TREATMENT PLANT
PROJECT NO. 11218

DESIGN CRITERIA

DRAWING G007
SHEET 7 OF 632

DESCRIPTION	UNITS	CRITERIA
NEUTRALIZATION SYSTEM		
SPENT CLEANING SOLUTION STORAGE TYPE: FRP TANK, ONE FOR ACID CIP SOLUTION, ONE FOR EACH CAUSTIC/ CHLORINE CIP SOLUTION		
CIP SOLUTION STORAGE		
TYPE: FRP TANKS, ONE DEDICATED TO EACH CAUSTIC/CHLORINE AND ACID NEUTRALIZATION SOLUTIONS		
NO. OF TANKS	NO.	2
VOLUME (EACH)	GAL	12,000
CIRCULATION PUMPS		
TYPE: IN-LINE CENTRIFUGAL		
NO. OF PUMPS	NO.	2
MOTOR SIZE	HP	10
FLOW	GPM	310
ULTRAVIOLET DISINFECTION		
TYPE: CLOSED REACTOR LOW PRESSURE HIGH OUTPUT LAMPS		
NUMBER OF REACTORS	NO.	2
NUMBER OF REDUNDANT REACTORS	NO.	1
REACTOR CAPACITY (EACH)	MGD	35
MINIMUM GIARDIA LOG INACTIVATION	LOG	0.5
DISINFECTION (CT) BASIN		
TYPE: PARTIALLY BURIED CONCRETE, SERPENTINE CHANNELS		
NUMBER OF TRAINS	NO.	2
VIRUS INACTIVATION (pH= 6-9, MINIMUM TEMPERATURE = 10 DEGREES C)	LOG	4.0
DISINFECTION CAPACITY, TOTAL	MGD	35
T10/T	PERCENT	60
L/W RATIO		34
WATER DEPTH	FT	10.5
TOTAL VOLUME	GAL	200,000
MF WASTE WASHWATER EQUALIZATION BASIN		
TYPE: PARTIALLY BURIED CONCRETE		
CAPACITY		
VOLUME	GAL.	30,000
NO. OF MEMBRANE BACKWASHES	NO.	16
WATER DEPTH	FT	9
DIMENSIONS	FT x FT	16 x 28
TRANSFER PUMPS		
TYPE: SUBMERSIBLE WITH VFD		
NUMBER OF PUMPS	NO.	4
NUMBER OF REDUNDANT PUMPS	NO.	1
CAPACITY (EACH)	GPM	560
TDH	FT OF WATER	32
MOTOR SIZE	HP	10

DESCRIPTION	UNITS	CRITERIA
COMBINED WASTE WASHWATER TREATMENT		
TYPE: COAGULATION, FLOCCULATION, CLARIFICATION		
NUMBER OF TRAINS	NO.	2
NUMBER OF REDUNDANT TRAINS	NO.	1
CAPACITY/EACH TRAIN (28 MGD PRODUCTION AT 92% RECOVERY)	MGD	2.5
COAGULATION		
TYPE: PUMP DIFFUSION		
PUMP TYPE: END SUCTION CENTRIFUGAL	NO.	1
FLOCCULATION		
MECHANICAL MIXER TYPE: 2-STAGE TAPERED MECHANICAL MIXING	NO.	4
DETENTION TIME (EACH STAGE)	MIN	12.5
DETENTION TIME (TOTAL)	MIN	25
CLARIFICATION		
TYPE: STAINLESS STEEL LAMELLA PLATE SETTLERS		
EFFECTIVE PLATE LOADING RATE	GPM/FT2	0.4
SLUDGE REMOVAL SYSTEM		
TYPE: CHAIN AND FLIGHT		
CONFIGURATION: ONE LONGITUDINAL AND ONE CROSS COLLECTOR PER TRAIN, TOTAL FOUR DRIVES		
PRODUCT WATER PUMPS		
TYPE: VERTICAL TURBINE		
NUMBER OF PUMPS	NO.	5
NUMBER OF REDUNDANT PUMPS	NO.	1
CAPACITY, EACH	GPM	3,700
TDH	FT OF WATER	346
MOTOR SIZE	HP	450

FILENAME:8127A10-6232-G008.dwg
LAST UPDATED: 01/06/2012 10:28 AM
LAST SAVED BY: trea

No.	DATE	REVISIONS	APPROVED

DESIGNED: DAH
DRAWN: RCM
CHECKED: TSD

RBF CONSULTING
carollo
IRVINE RANCH WATER DISTRICT

JIM MEYERHOFER RCE NO. 48451 PROJECT MANAGER DATE
CINDY MILLER RCE NO. 58116 PROJECT MANAGER DATE
PATRICIA UEMATSU RCE NO. 36762 PRINCIPAL ENGINEER DATE

IRVINE RANCH WATER DISTRICT
BAKER WATER TREATMENT PLANT
PROJECT NO. 11218

DESIGN CRITERIA II

DRAWING G008
SHEET 8 OF 632

DESCRIPTION	UNITS	CRITERIA
FERRIC CHLORIDE (FC)		
CHARACTERISTICS: LIQUID, 39% SOLN, 4.6 LBS FC/GAL, SG=1.42		
STORAGE LOCATION: BAKER WTP CHEMICAL BUILDING		
STORAGE TYPE: FRP BULK TANKS		
NUMBER OF BULK TANKS	NO.	2
STORAGE CAPACITY (EACH)	GAL	8,000
STORAGE CAPACITY (TOTAL)	GAL	16,000
STORAGE TIME (AVERAGE DOSE AT 28 MGD)	DAYS	29
AVERAGE DELIVERY INTERVAL	DAYS	7
METERING PUMPS FOR MF FEED WATER PRETREATMENT		
METERING PUMP TYPE: HYDRAULIC DIAPHRAGM		
NUMBER OF METERING PUMPS		
DUTY	NO.	1
STANDBY	NO.	1
PUMP CAPACITY (EACH)	GPH	45
METERING PUMPS FOR MF WASH WATER PRETREATMENT		
METERING PUMP TYPE: HYDRAULIC DIAPHRAGM		
NUMBER OF METERING PUMPS		
DUTY	NO.	1
STANDBY (COMMON STANDBY WITH PRETREATMENT)	NO.	0
PUMP CAPACITY (EACH)	GPH	45
CHLORINE DIOXIDE (CDO)		
GENERATOR TYPE: BATCH, 3 CHEMICALS		
GENERATION PRINCIPAL: EDUCTOR OR REACTION COLUMN		
GENERATOR LOCATION: BAKER WTP CHEMICAL BUILDING		
NUMBER OF GENERATORS	NO.	1
DUTY	NO.	0
STANDBY	PPD	500
GENERATOR CAPACITY (EACH)		
	NO.	1
NUMBER OF BATCH TANKS	GAL	2,000
STORAGE CAPACITY (EACH)	GAL	2,000
STORAGE CAPACITY (TOTAL)	HRS	4
STORAGE TIME (AVERAGE DOSE AT 28 MGD)		
DOSING PUMP TYPE: IN-LINE, CENTRIFUGAL		
NUMBER OF PUMPS	NO.	1
DUTY	NO.	1
STANDBY	GPH	660
PUMP CAPACITY (EACH)		
SODIUM CHLORITE (SC)		
CHARACTERISTICS: LIQUID, 25% SOLN, 2.6 LBS SC/GAL, SG=1.24		
STORAGE LOCATION: BAKER WTP CHEMICAL BUILDING		
STORAGE TYPE: VERTICAL FRP BULK STORAGE TANKS		
	NO.	1
NUMBER OF BULK TANKS	GAL	6,900
STORAGE CAPACITY (EACH)	GAL	6,900
STORAGE CAPACITY (TOTAL)	DAYS	54
STORAGE TIME (AVERAGE DOSE AT 28 MGD)		
AVERAGE DELIVERY INTERVAL	DAYS	36
HYDROCHLORIC ACID (HCL)		
CHARACTERISTICS: LIQUID, 15% SOLN, 1.3 LBS HCL/GAL, SG=1.07		
STORAGE LOCATION: BAKER WTP CHEMICAL BUILDING		
STORAGE TYPE: VERTICAL FRP BULK STORAGE TANKS		
NUMBER OF BULK TANKS	NO.	1
STORAGE CAPACITY (EACH)	GAL	8,000
STORAGE CAPACITY (TOTAL)	GAL	8,000
STORAGE TIME (AVERAGE DOSE AT 28 MGD)	DAYS	80
AVERAGE DELIVERY INTERVAL	DAYS	53

DESCRIPTION	UNITS	CRITERIA
CAUSTIC SODA (CS)		
CHARACTERISTICS: LIQUID, 25% SOLN, 2.7 LBS CS/GALLON, SG=1.27		
STORAGE LOCATION: BAKER WTP CHEMICAL BUILDING		
STORAGE TYPE: VERTICAL FRP BULK STORAGE TANKS		
NUMBER OF BULK TANKS	NO.	2
STORAGE CAPACITY (EACH)	GAL	6,900
STORAGE CAPACITY (TOTAL)	GAL	13,800
STORAGE TIME (AVG DOSE AT 28 MGD, PLUS MF CLEANING)	DAYS	30
AVERAGE DELIVERY INTERVAL	DAYS	10
METERING PUMP TYPE (POST TREATMENT): HYDRAULIC DIAPHRAGM		
NUMBER OF METERING PUMPS		
DUTY	NO.	1
STANDBY	NO.	1
MINIMUM PUMP CAPACITY (EACH)	GPH	30
TRANSFER PUMP TYPE (MEMBRANE CLEANING):		
TYPE: PLASTIC AIR OPERATED DOUBLE DIAPHRAGM		
TRANSFER FLOW RATE	GPM	22
SODIUM HYPOCHLORITE (SH)		
CHARACTERISTICS: LIQUID, 10.5% SOLN, 0.95 LBS/GAL AS CL2, SG=1.14		
STORAGE LOCATION: BAKER WTP CHEMICAL BUILDING		
STORAGE TYPE: VERTICAL FRP BULK STORAGE TANKS		
NUMBER OF BULK TANKS	NO.	2
STORAGE CAPACITY (EACH)	GAL	8,000
STORAGE CAPACITY (TOTAL)	GAL	16,000
STORAGE TIME (AVG DOSE AT 28 MGD, MF CLEANING, AND CDO GENERATION)	DAYS	16
AVERAGE DELIVERY INTERVAL	DAYS	5
METERING PUMP TYPE (DISINFECTION): HYDRAULIC DIAPHRAGM		
NUMBER OF METERING PUMPS		
DUTY	NO.	1
STANDBY	NO.	1
MINIMUM PUMP CAPACITY (EACH)	GPH	45
TRANSFER PUMP TYPE (MEMBRANE CLEANING):		
TYPE: PLASTIC AIR OPERATED DOUBLE DIAPHRAGM		
TRANSFER FLOW RATE	GPM	5
AQUEOUS AMMONIA (AA)		
CHARACTERISTICS: LIQUID, 29% SOLN, 2.2 LBS AA/GAL, SG-0.90		
STORAGE LOCATION: BAKER WTP CHEMICAL BUILDING		
STORAGE TYPE: VERTICAL EPOXY LINED WELDED STEEL, PRESSURIZED		
NUMBER OF BULK TANKS	NO.	2
STORAGE CAPACITY (EACH)	GAL	5,000
STORAGE CAPACITY (TOTAL)	GAL	10,000
STORAGE TIME (AVERAGE DOSE AT 28 MGD)	DAYS	116
AVERAGE DELIVERY INTERVAL	DAYS	74
METERING PUMP TYPE: HYDRAULIC DIAPHRAGM		
NUMBER OF METERING PUMPS		
DUTY	NO.	1
STANDBY	NO.	1
MINIMUM PUMP CAPACITY (EACH)	GPH	5
CITRIC ACID (CA)		
CHARACTERISTICS: LIQUID, 50% SOLN, 5.2 LBS CA/GAL, SG=1.24		
STORAGE LOCATION: BAKER WTP CHEMICAL BUILDING		
STORAGE TYPE: VERTICAL FRP BULK STORAGE TANKS		
NUMBER OF BULK TANKS	NO.	1
STORAGE CAPACITY (EACH)	GAL	6,900
STORAGE CAPACITY (TOTAL)	GAL	6,900
STORAGE TIME (FOR MF CLEANING)	DAYS	122
AVERAGE DELIVERY INTERVAL	DAYS	81

DESCRIPTION	UNITS	CRITERIA
TRANSFER PUMP TYPE (MEMBRANE CLEANING):		
TYPE: PLASTIC AIR OPERATED DOUBLE DIAPHRAGM		
TRANSFER FLOW RATE	GPM	22
SODIUM BISULFITE (SB)		
CHARACTERISTICS: LIQUID, 38% SOLN, 4.2 LBS SB/GAL, SG=1.34		
STORAGE LOCATION: BAKER WTP CHEMICAL BUILDING		
STORAGE TYPE: VERTICAL FRP BULK STORAGE TANKS		
NUMBER OF BULK TANKS	NO.	1
STORAGE CAPACITY (EACH)	GAL	6,300
STORAGE CAPACITY (TOTAL)	GAL	6,300
STORAGE TIME (MF CLEANING SOLUTION NEUTRALIZATION)	DAYS	96
AVERAGE DELIVERY INTERVAL	DAYS	64
TRANSFER PUMP TYPE (MEMBRANE CLEANING):		
TYPE: PLASTIC AIR OPERATED DOUBLE DIAPHRAGM		
TRANSFER FLOW RATE	GPM	2

CHEMICAL DOSING (TREATMENT PROCESS)	DOSAGE (mg/L) MINIMUM	AVERAGE	MAXIMUM
FERRIC CHLORIDE (PRETREATMENT)	2	10	20
FERRIC CHLORIDE (MFWW)	40	100	400
CHLORINE DIOXIDE	0.5	1	1.4
SODIUM HYPOCHLORITE	2.5	3	4
AQUA AMMONIA	0.4	0.5	0.6
CAUSTIC SODA	1	4	7

CHEMICAL DOSING (MF CLEANING)	DOSAGE (mg/L) MINIMUM	AVERAGE	MAXIMUM
SODIUM HYPOCHLORITE (CIP)		1,000	
SODIUM HYPOCHLORITE (CEB)		400	
CAUSTIC SODA (CIP)		10,000	
CAUSTIC SODA (NEUTRALIZATION)		10,000	
CITRIC ACID (CIP)		20,000	
SODIUM BISULFITE (NEUTRALIZATION CIP)		1,470	
SODIUM BISULFITE (NEUTRALIZATION CEB)		590	

FILENAME:8127A10-6232-G009.dwg
LAST UPDATED: 01/06/2012 10:30 AM
LAST SAVED BY: trea

No.	DATE	REVISIONS	APPROVED

DESIGNED: DAH
DRAWN: RCM
CHECKED: TSD

RBF CONSULTING
carollo
IRVINE RANCH WATER DISTRICT

JIM MEYERHOFER	RCE NO. 48451	PROJECT MANAGER	DATE
CINDY MILLER	RCE NO. 58116	PROJECT MANAGER	DATE
PATRICIA UEMATSU	RCE NO. 36762	PRINCIPAL ENGINEER	DATE

IRVINE RANCH WATER DISTRICT
BAKER WATER TREATMENT PLANT
PROJECT NO. 11218

DESIGN CRITERIA III
CHEMICALS

DRAWING
G009
SHEET
9 OF 632

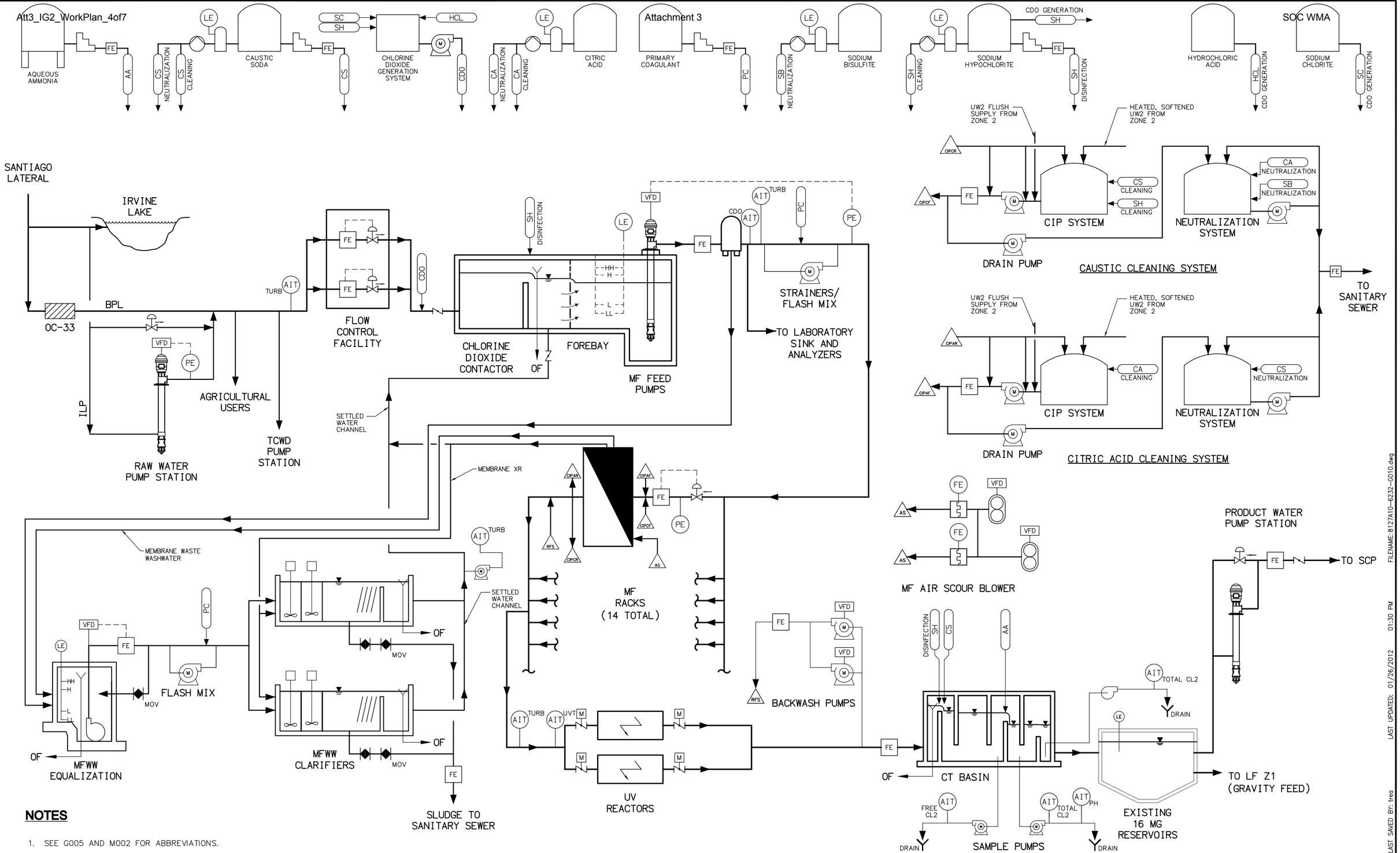

NOTES

1. SEE G005 AND M002 FOR ABBREVIATIONS.

No.	DATE	REVISIONS	APPROVED

DESIGNED: DAH
DRAWN: RCM
CHECKED: TSD

RBF CONSULTING
carollo
IRVINE RANCH WATER DISTRICT

JIM MEYERHOFER	RCE NO. 48451	PROJECT MANAGER	DATE
CINDY MILLER	RCE NO. 58116	PROJECT MANAGER	DATE
PATRICIA UEMATSU	RCE NO. 36762	PRINCIPAL ENGINEER	DATE

IRVINE RANCH WATER DISTRICT
BAKER WATER TREATMENT PLANT
PROJECT NO. 11218

PROCESS FLOW DIAGRAM

DRAWING G010
SHEET 10 OF 632

FILENAME: 8127A10-6232-G010.dwg
LAST UPDATED: 01/26/2012 01:30 PM
LAST SAVED BY: trea

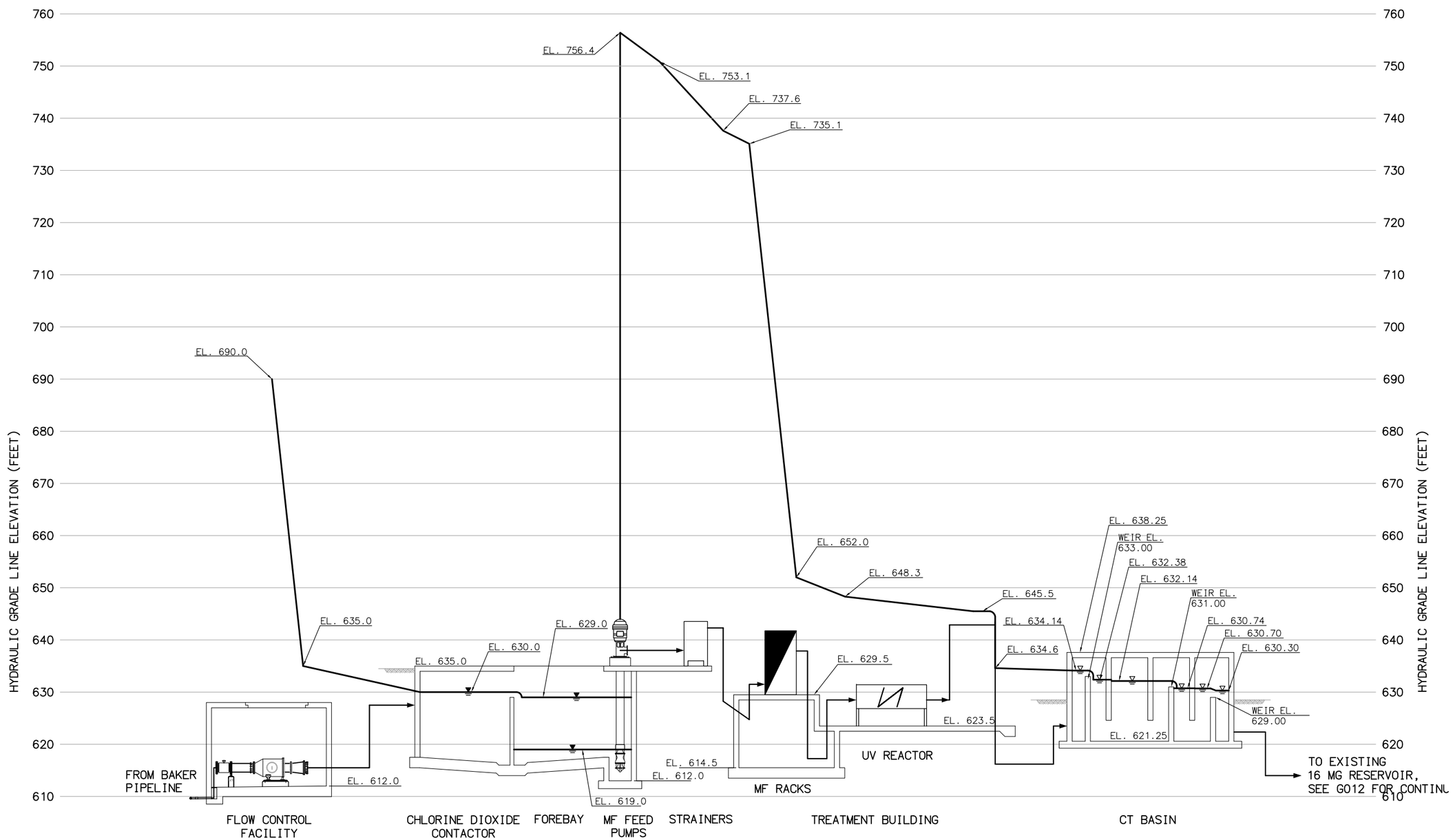

HYDRAULIC PROFILE AT 35 MGD
VERTICAL SCALE : 1" = 10'
HORIZONTAL SCALE : NONE

No.	DATE	REVISIONS	APPROVED

DESIGNED: DAH
DRAWN: TLR
CHECKED: TSD

RBF CONSULTING | carollo | IRVINE RANCH WATER DISTRICT

JIM MEYERHOFER	RCE NO. 48451	PROJECT MANAGER	DATE
CINDY MILLER	RCE NO. 58116	PROJECT MANAGER	DATE
PATRICIA UEMATSU	RCE NO. 36762	PRINCIPAL ENGINEER	DATE

IRVINE RANCH WATER DISTRICT
BAKER WATER TREATMENT PLANT
PROJECT NO. 11218

HYDRAULIC PROFILE I MAIN PROCESS

DRAWING G011
SHEET 11 OF 632

FILENAME:8127A10-6232-G011.dwg
LAST UPDATED: 02/01/2012 09:38 AM
LAST SAVED BY: trea

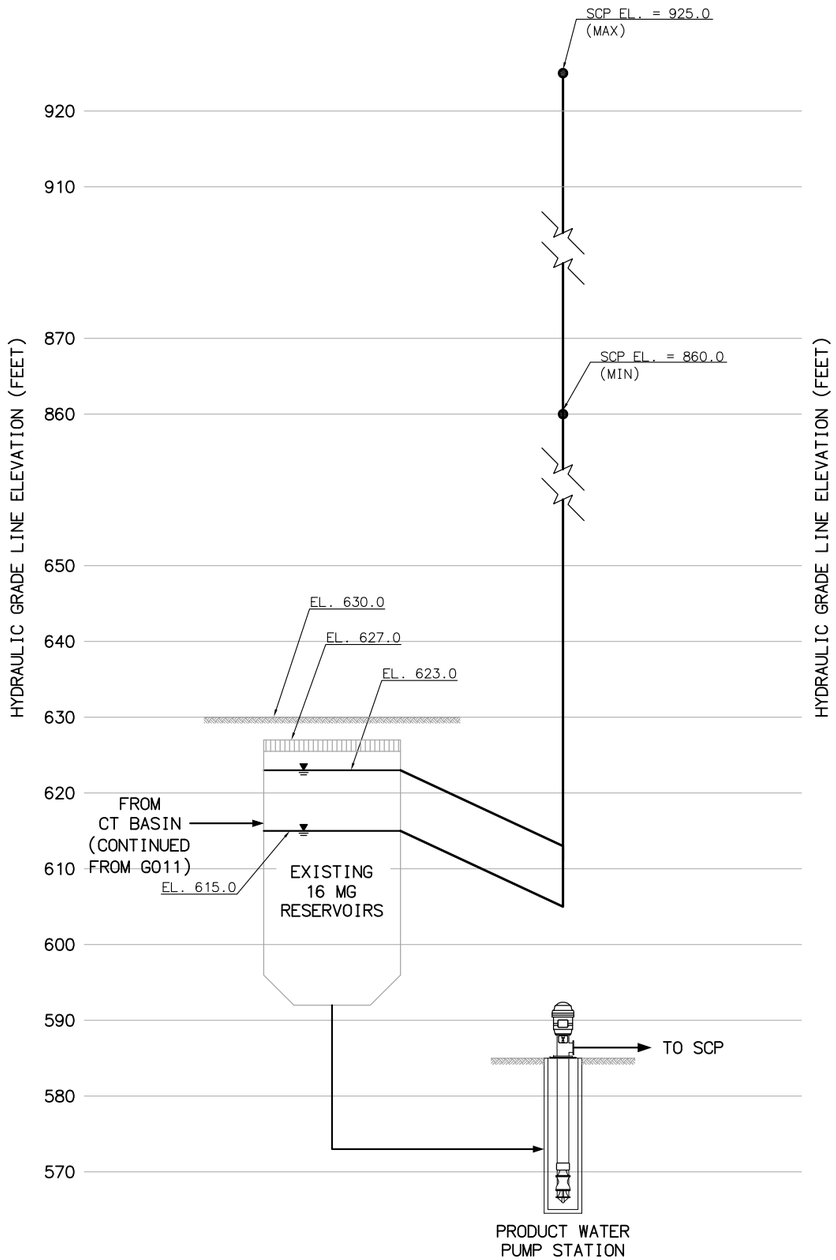

PRODUCT WATER PUMP STATION
VERTICAL SCALE : 1" = 10'
HORIZONTAL SCALE : NONE

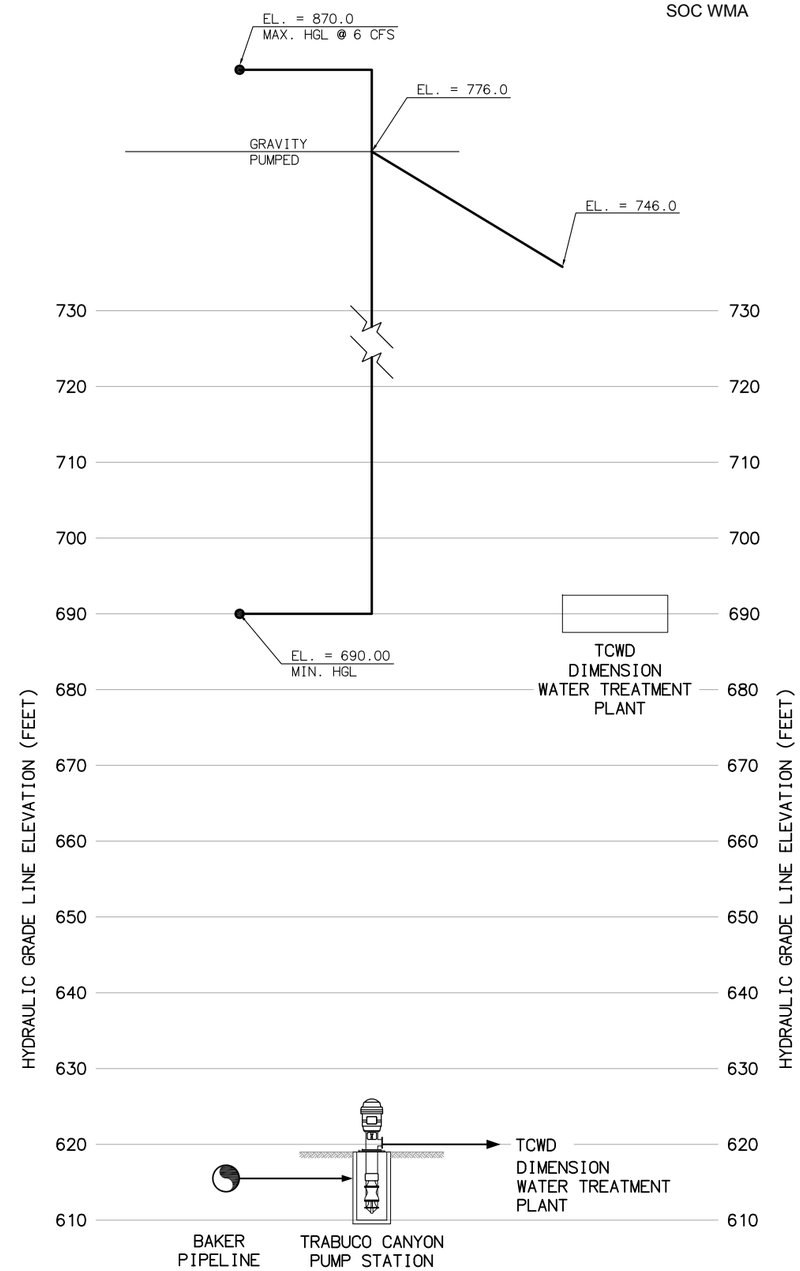

TRABUCO CANYON PUMP STATION
VERTICAL SCALE : 1" = 10'
HORIZONTAL SCALE : NONE

LAST SAVED BY: trea LAST UPDATED: 01/26/2012 01:30 PM FILENAME: 8127A10-6232-G012.dwg

No.	DATE	REVISIONS	APPROVED

DESIGNED: DAH
DRAWN: RCM
CHECKED: TSD

RBF CONSULTING

carollo

IRVINE RANCH WATER DISTRICT

JIM MEYERHOFER	RCE NO. 48451	PROJECT MANAGER	DATE
CINDY MILLER	RCE NO. 58116	PROJECT MANAGER	DATE
PATRICIA UEMATSU	RCE NO. 36762	PRINCIPAL ENGINEER	DATE

IRVINE RANCH WATER DISTRICT
BAKER WATER TREATMENT PLANT
PROJECT NO. 11218

HYDRAULIC PROFILE II

DRAWING **G012**

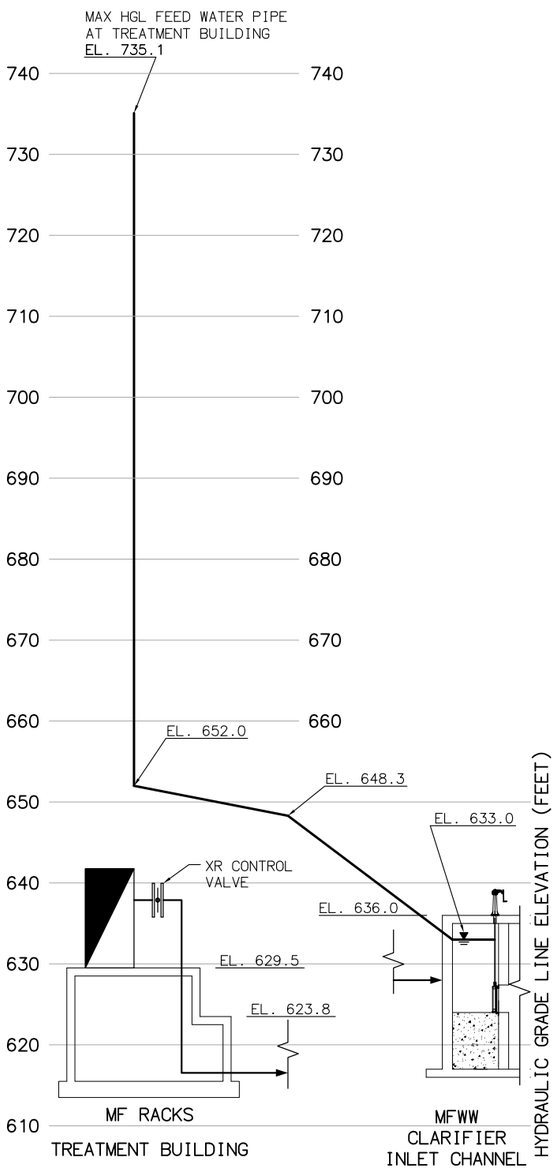

EXCESS RECIRCULATION AT 3.6 MGD

VERTICAL SCALE : 1" = 10'
HORIZONTAL SCALE : NONE

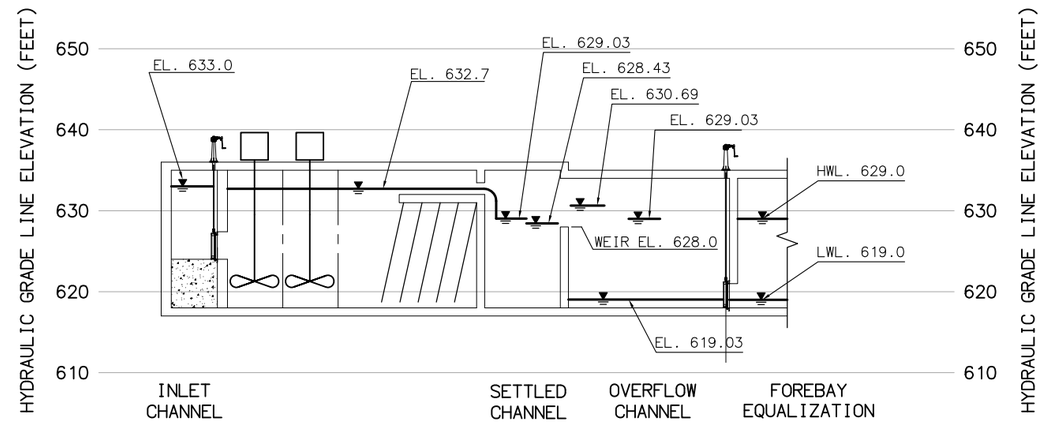

MFWW CLARIFIERS AT 5 MGD

VERTICAL SCALE : 1" = 10'
HORIZONTAL SCALE : NONE

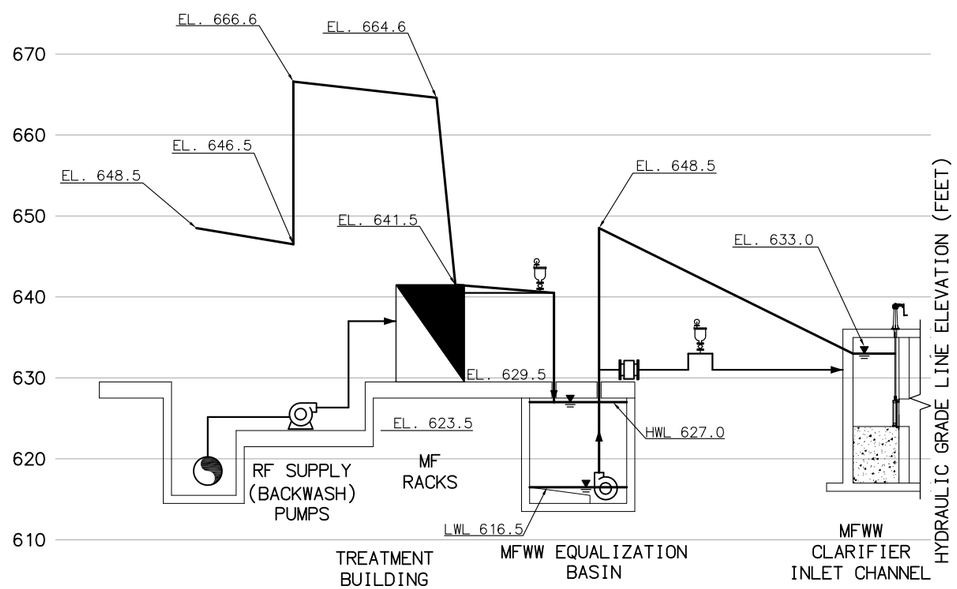

MFWW HYDRAULIC PROFILE AT 2.4 MGD

VERTICAL SCALE : 1" = 10'
HORIZONTAL SCALE : NONE

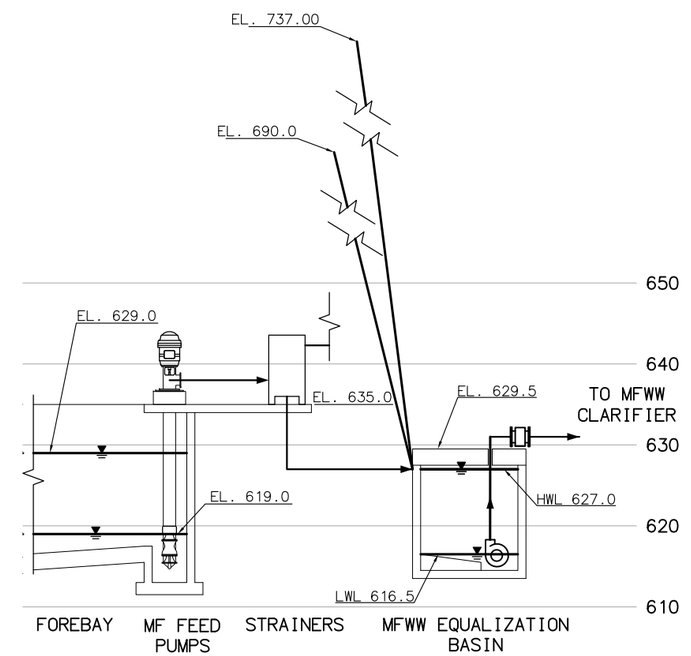

SWW DISCHARGE AT 600 GPM

VERTICAL SCALE : 1" = 10'
HORIZONTAL SCALE : NONE

FILENAME: 8127A10-6232-G013.dwg
LAST UPDATED: 01/26/2012 01:30 PM
LAST SAVED BY: trea

No.	DATE	REVISIONS	APPROVED

DESIGNED: DAH
DRAWN: TLR
CHECKED: TSD

RBF CONSULTING
carollo
IRVINE RANCH WATER DISTRICT

JIM MEYERHOFER	RCE NO. 48451	PROJECT MANAGER	DATE
CINDY MILLER	RCE NO. 58116	PROJECT MANAGER	DATE
PATRICIA UEMATSU	RCE NO. 36762	PRINCIPAL ENGINEER	DATE

IRVINE RANCH WATER DISTRICT
BAKER WATER TREATMENT PLANT
PROJECT NO. 11218

HYDRAULIC PROFILE II
BACKWASH RECOVERY

DRAWING G013
SHEET 13 OF 632

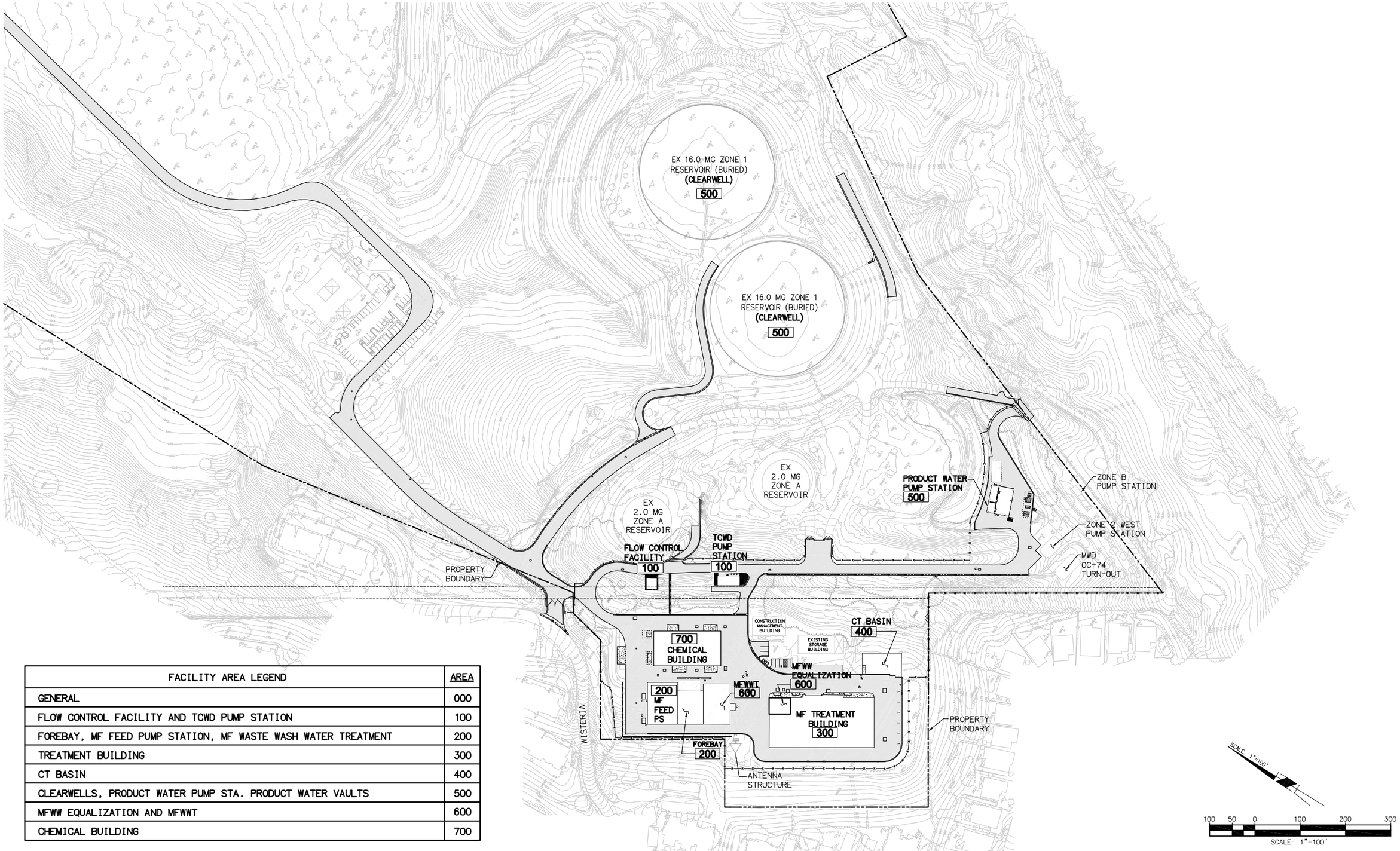

FACILITY AREA LEGEND	AREA
GENERAL	000
FLOW CONTROL FACILITY AND TCWD PUMP STATION	100
FOREBAY, MF FEED PUMP STATION, MF WASTE WASH WATER TREATMENT	200
TREATMENT BUILDING	300
CT BASIN	400
CLEARWELLS, PRODUCT WATER PUMP STA. PRODUCT WATER VAULTS	500
MFWW EQUALIZATION AND MFWWT	600
CHEMICAL BUILDING	700

FILENAME: 6232-G014.dwg

LAST UPDATED: 01/20/2012 01:37 PM

LAST SAVED BY: dtrujillo

No.	DATE	REVISIONS	APPROVED

DESIGNED: CBH
DRAWN: DDT
CHECKED: CLM

RBF CONSULTING

carollo

IRVINE RANCH WATER DISTRICT

COREY HESS	RCE NO. 68499	PROJECT ENGINEER	DATE
CINDY MILLER	RCE NO. 58116	PROJECT MANAGER	DATE
PATRICIA UEMATSU	RCE NO. 36762	PRINCIPAL ENGINEER	DATE

IRVINE RANCH WATER DISTRICT
BAKER WATER TREATMENT PLANT
PROJECT NO. 11218

KEY MAP OF NEW FACILITIES

DRAWING
G014

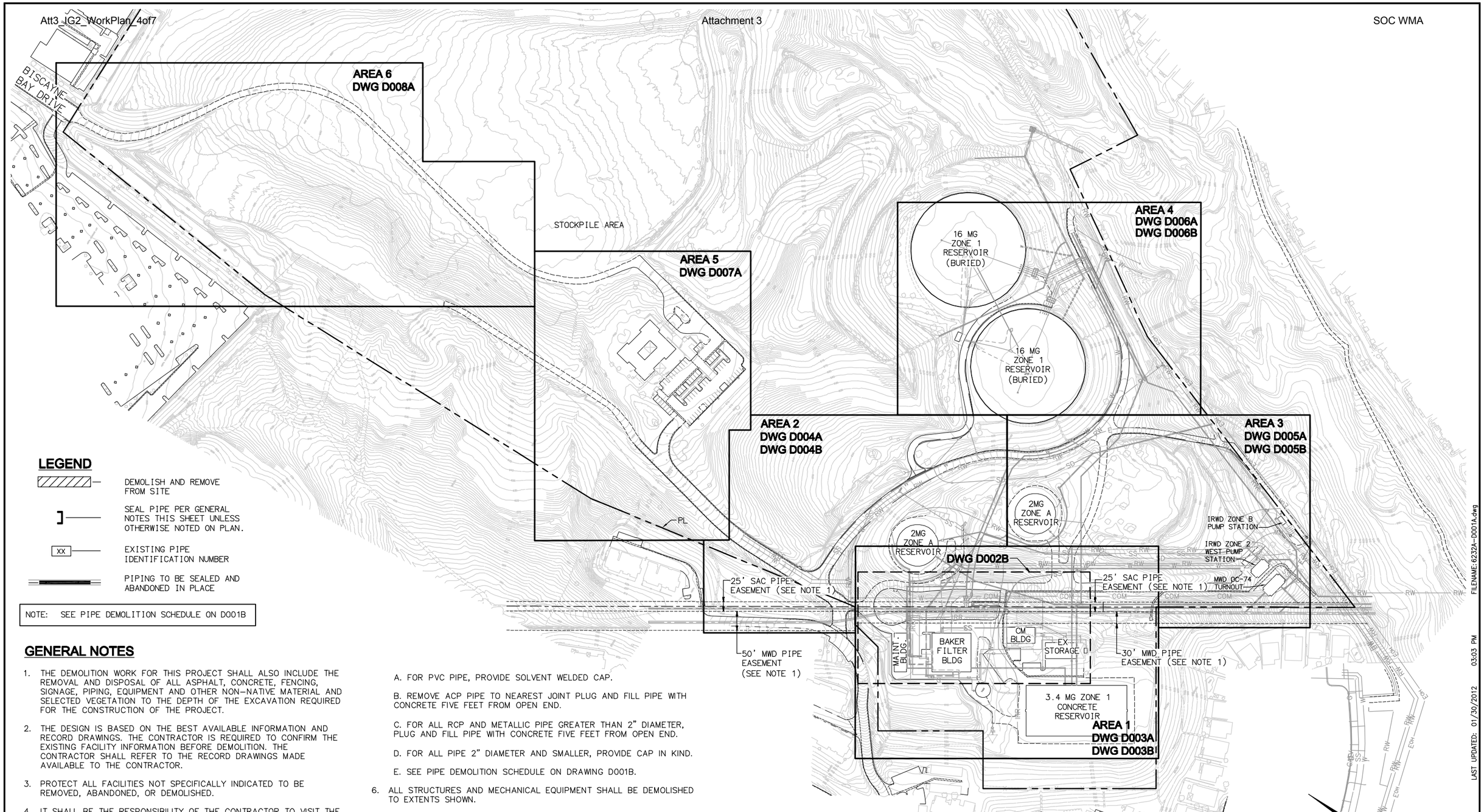

LEGEND

- DEMOLISH AND REMOVE FROM SITE
- SEAL PIPE PER GENERAL NOTES THIS SHEET UNLESS OTHERWISE NOTED ON PLAN.
- XX — EXISTING PIPE IDENTIFICATION NUMBER
- PIPING TO BE SEALED AND ABANDONED IN PLACE

NOTE: SEE PIPE DEMOLITION SCHEDULE ON D001B

GENERAL NOTES

1. THE DEMOLITION WORK FOR THIS PROJECT SHALL ALSO INCLUDE THE REMOVAL AND DISPOSAL OF ALL ASPHALT, CONCRETE, FENCING, SIGNAGE, PIPING, EQUIPMENT AND OTHER NON-NATIVE MATERIAL AND SELECTED VEGETATION TO THE DEPTH OF THE EXCAVATION REQUIRED FOR THE CONSTRUCTION OF THE PROJECT.
2. THE DESIGN IS BASED ON THE BEST AVAILABLE INFORMATION AND RECORD DRAWINGS. THE CONTRACTOR IS REQUIRED TO CONFIRM THE EXISTING FACILITY INFORMATION BEFORE DEMOLITION. THE CONTRACTOR SHALL REFER TO THE RECORD DRAWINGS MADE AVAILABLE TO THE CONTRACTOR.
3. PROTECT ALL FACILITIES NOT SPECIFICALLY INDICATED TO BE REMOVED, ABANDONED, OR DEMOLISHED.
4. IT SHALL BE THE RESPONSIBILITY OF THE CONTRACTOR TO VISIT THE SITE AND INSPECT THE NATURE AND CONDITION OF ALL FACILITIES TO BE DEMOLISHED OR ALTERED, INCLUDING ALL MATERIAL TESTING TO DETERMINE DEMOLITION AND DISPOSAL REQUIREMENTS.
5. CONTRACTOR SHALL IDENTIFY LENGTHS AND ELEVATIONS OF PIPING DESIGNATED FOR REMOVAL. ALL PIPES ABANDONED IN PLACE SHALL BE DEWATERED AND THEN PLUGGED WATERTIGHT. PROVIDE RESTRAINED BULKHEADS ON STEEL PIPE AND RESTRAINED PLUGS ON DUCTILE IRON PIPE.

   A. FOR PVC PIPE, PROVIDE SOLVENT WELDED CAP.

   B. REMOVE ACP PIPE TO NEAREST JOINT PLUG AND FILL PIPE WITH CONCRETE FIVE FEET FROM OPEN END.

   C. FOR ALL RCP AND METALLIC PIPE GREATER THAN 2" DIAMETER, PLUG AND FILL PIPE WITH CONCRETE FIVE FEET FROM OPEN END.

   D. FOR ALL PIPE 2" DIAMETER AND SMALLER, PROVIDE CAP IN KIND.

   E. SEE PIPE DEMOLITION SCHEDULE ON DRAWING D001B.
6. ALL STRUCTURES AND MECHANICAL EQUIPMENT SHALL BE DEMOLISHED TO EXTENTS SHOWN.
7. NOT ALL EXISTING ELECTRICAL IS SHOWN. CONTRACTOR SHALL DEMOLISH ABANDONED ELECTRICAL TO EXTENTS NECESSARY FOR CONSTRUCTION AND RELOCATE OR PROTECT IN PLACE ACTIVE ELECTRICAL.
8. CONTRACTOR IS RESPONSIBLE FOR ISOLATING AND DEWATERING ALL UTILITIES, AS NECESSARY PRIOR TO DEMOLITION OR ABANDONMENT.

NOTES

1. SPECIAL CONSTRUCTION REQUIREMENTS APPLY WITH SAC AND MWD EASEMENTS. SEE SPECIFICATIONS.

FILENAME: 6232A-D001A.dwg
LAST UPDATED: 01/30/2012 03:03 PM
LAST SAVED BY: ewalker

No.	DATE	REVISIONS	APPROVED

DESIGNED: CBH
DRAWN: DDT
CHECKED: CLM

RBF CONSULTING
carollo
IRVINE RANCH WATER DISTRICT

COREY HESS	RCE NO. 68499	PROJECT ENGINEER	DATE
CINDY MILLER	RCE NO. 58116	PROJECT MANAGER	DATE
PATRICIA UEMATSU	RCE NO. 36762	PRINCIPAL ENGINEER	DATE

IRVINE RANCH WATER DISTRICT
BAKER WATER TREATMENT PLANT
PROJECT NO. 11218

DEMOLITION KEY PLAN, GENERAL NOTES & LEGEND

DRAWING D001A
SHEET 15 OF 632

PIPE DEMOLITION SCHEDULE*

PIPE ID NO	DIAMETER	SERVICE	MATERIAL	DEPTH (ft)	APPROX. LENGTH OF REMOVAL (ft)	DE-WATER LENGTH (FT)	ACTIVE (Y/N)		PIPE ID NO	DIAMETER	SERVICE	MATERIAL	DEPTH (ft)	APPROX. LENGTH OF REMOVAL (ft)	DE-WATER LENGTH (FT)	ACTIVE (Y/N)
01	24"	WATER	CCP OR CML&C WSP	4 - 15	60	100	Y		22	DUCT BANK	SAMPLE		3 - 5	60	-	Y
02	24"	WATER	CCP OR CML&C WSP	4 - 8	430	430	Y		23	DUCT BANK	ELEC		3 - 5	60	-	Y
03	30"	WATER	CCP OR CML&C WSP	4 - 8	280	280	Y		24	2"	GAS	PVC	3 - 5	130	-	Y
04	2"	LPG		3 - 5	210	-	Y		25		ELEC		3 - 5	170	-	Y
05	8"	WATER	ACP	4 - 6	430	600	Y		26	24"	WATER	ACP	4 - 8	60	-	N
06	20"	WATER	CCP OR ACP	4 - 6	240	240	Y		27	24"	WATER	ACP	4 - 6	300	-	N
07	4"	IRR		3 - 5	370	370	Y		28	16"	SD	RCP	4 - 8	60	-	N
08	4"	WATER		4 - 6	240	240	Y		29	15"	SD	RCP	6 - 15	90	-	Y
09	6"	WATER	ACP	4 - 6	60	60	Y		30	16"	WATER	WSP	4 - 8	40	80	Y
10	4"	WATER	PVC	3 - 5	220	220	Y		31	24"	WATER	ACP	8 - 20	280	-	N
11	2"	GAS	PVC	3 - 5	540	-	Y		32	24"	SD	RCP	8 - 12	90	-	Y
12	3"	CL2		3 - 5	330	-	N		33	24"	WATER	WSP	4 - 15	50	150	Y
13	21"	SD	RCP	6 - 8	220	-	Y		34	24"	WATER	WSP	4 - 15	30	150	Y
14	4"	IRR		3 - 5	100	100	Y		35	24"	WATER	WSP	4 - 15	30	150	Y
15	8"	WATER	ACP	3 - 5	280	300	Y		36	24"	WATER	WSP	4 - 15	35	150	Y
16	4"	IRR		3 - 5	570	570	Y		37	24"	WATER	WSP	4 - 15	30	150	Y
17	1"	ELEC		4 - 15	120	-	N		38	24"	WATER	WSP	4 - 15	30	150	Y
18	4"	SS	PVC	4 - 6	100	-	Y		39	24"	WATER	WSP	4 - 6	370	150	Y
19	4"	SS	PVC	4 - 6	100	-	Y		40	18"	SD	RCP	10 - 12	35	-	Y
20		COMM		3 - 5	210	-	Y		41	18"	WATER	ACP	4 - 6	170	-	N
21	DUCT BANK	CHEM (CL&AA)		3 - 5	60	-	Y		42	3/4"	WATER		3 - 5	200	-	N

* PIPE DEMOLITION SCHEDULE BASED ON REVIEW OF AVAILABLE RECORD DRAWINGS. IT IS THE CONTRACTOR'S REPONSIBILITY TO VERIFY LOCATION, MATERIAL, DEPTH, LENGTH OF REMOVAL, DE-WATER LENGTH AND STATUS (ACTIVE OR NOT ACTIVE).

NOTES

1. SPECIAL CONSTRUCTION REQUIREMENTS APPLY WITH SAC AND MWD EASEMENTS. SEE SPECIFICATIONS.

PIPE DEMOLITION KEY MAP

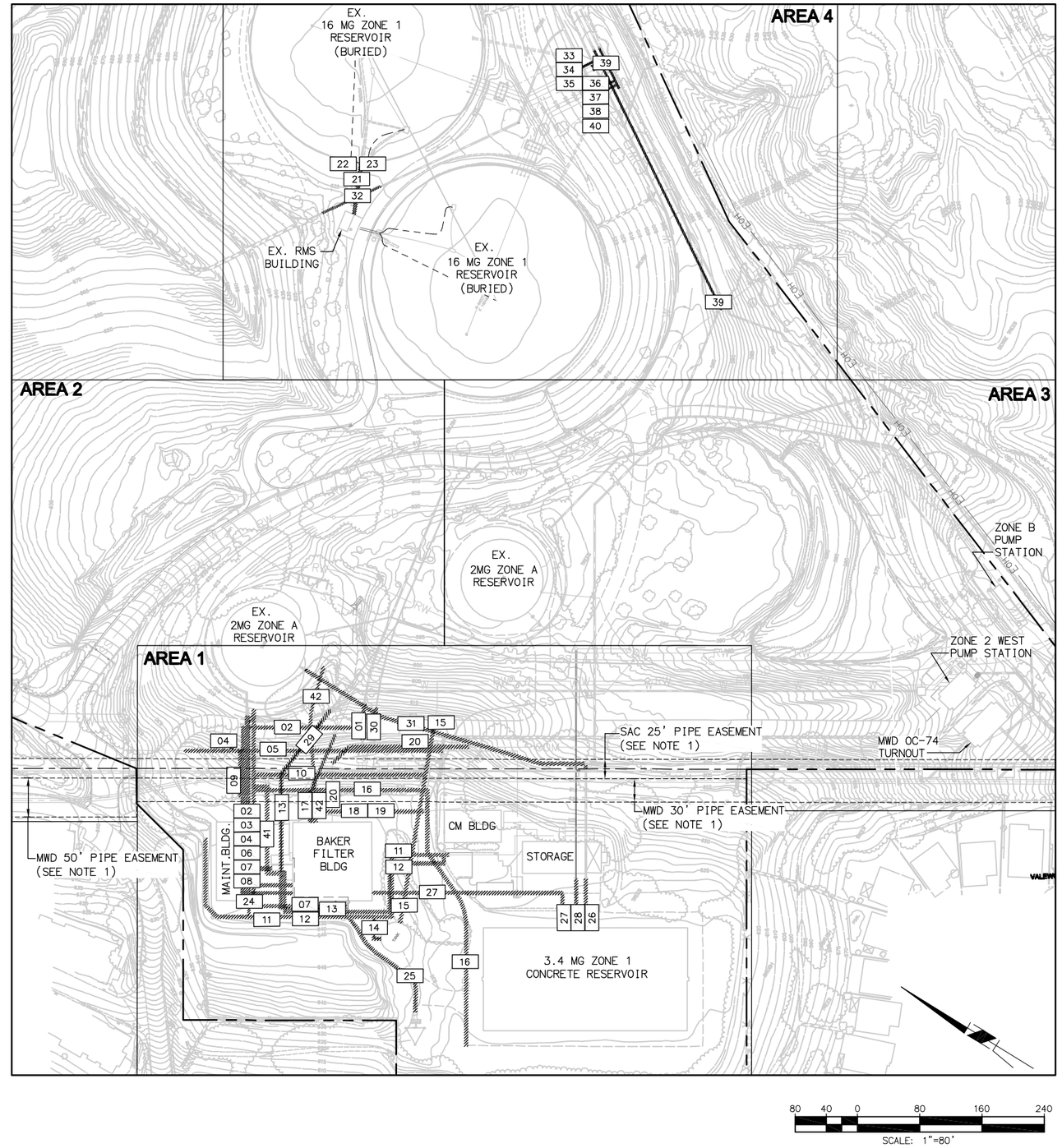

No.	DATE	REVISIONS	APPROVED

DESIGNED: CBH
DRAWN: DDT
CHECKED: CLM

RBF CONSULTING

carollo

IRVINE RANCH WATER DISTRICT

COREY HESS	RCE NO. 68499	PROJECT ENGINEER	DATE
CINDY MILLER	RCE NO. 58116	PROJECT MANAGER	DATE
PATRICIA UEMATSU	RCE NO. 36762	PRINCIPAL ENGINEER	DATE

IRVINE RANCH WATER DISTRICT
BAKER WATER TREATMENT PLANT
PROJECT NO. 11218

PIPE DEMOLITION SCHEDULE

DRAWING D001B

SHEET 16 OF 632

FILENAME: 6232A-D001B.dwg
LAST UPDATED: 01/20/2012 01:56 PM
LAST SAVED BY: dtrujillo

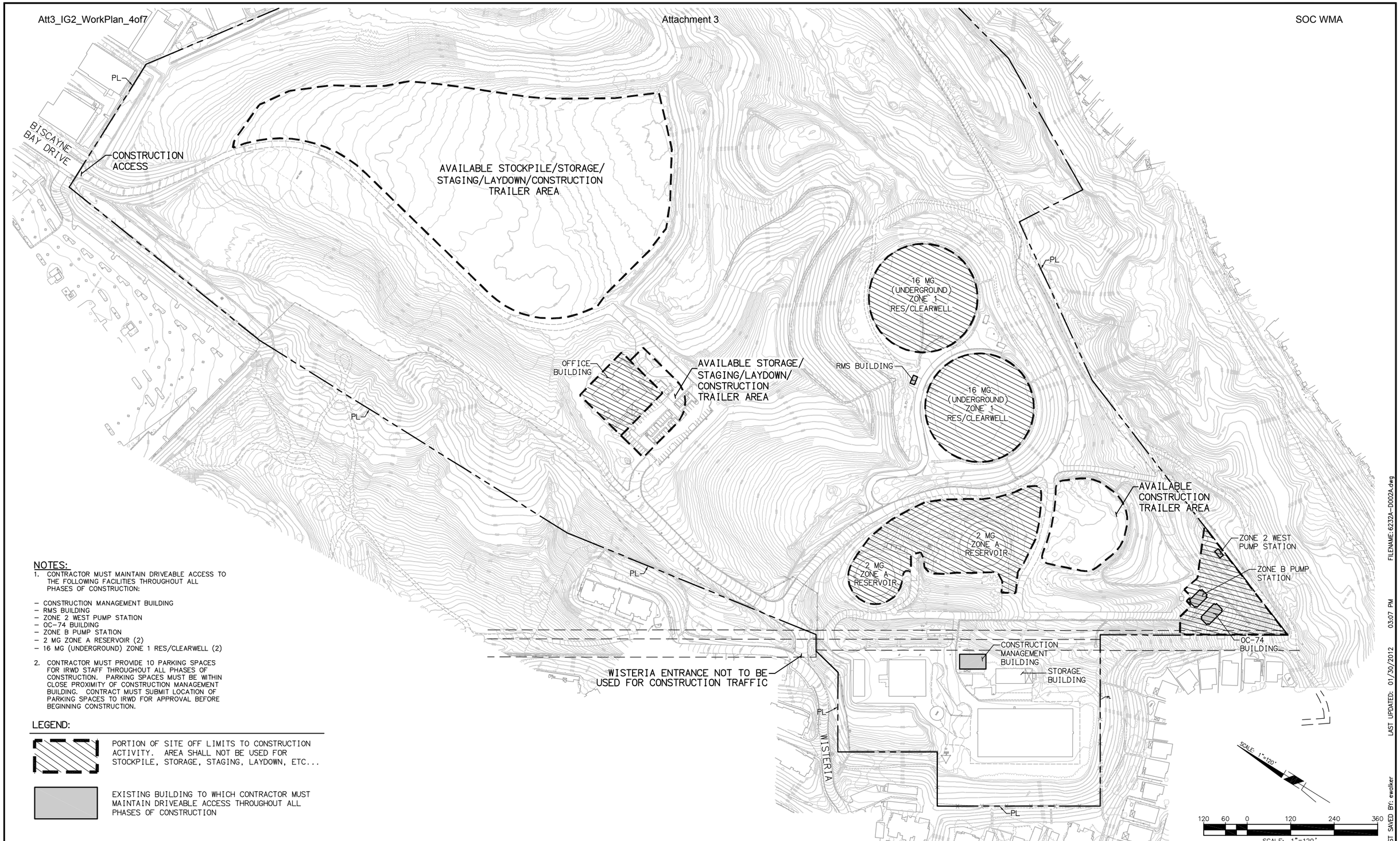

NOTES:

1. CONTRACTOR MUST MAINTAIN DRIVEABLE ACCESS TO THE FOLLOWING FACILITIES THROUGHOUT ALL PHASES OF CONSTRUCTION:

- CONSTRUCTION MANAGEMENT BUILDING
- RMS BUILDING
- ZONE 2 WEST PUMP STATION
- OC-74 BUILDING
- ZONE B PUMP STATION
- 2 MG ZONE A RESERVOIR (2)
- 16 MG (UNDERGROUND) ZONE 1 RES/CLEARWELL (2)

2. CONTRACTOR MUST PROVIDE 10 PARKING SPACES FOR IRWD STAFF THROUGHOUT ALL PHASES OF CONSTRUCTION. PARKING SPACES MUST BE WITHIN CLOSE PROXIMITY OF CONSTRUCTION MANAGEMENT BUILDING. CONTRACT MUST SUBMIT LOCATION OF PARKING SPACES TO IRWD FOR APPROVAL BEFORE BEGINNING CONSTRUCTION.

LEGEND:

PORTION OF SITE OFF LIMITS TO CONSTRUCTION ACTIVITY. AREA SHALL NOT BE USED FOR STOCKPILE, STORAGE, STAGING, LAYDOWN, ETC...

EXISTING BUILDING TO WHICH CONTRACTOR MUST MAINTAIN DRIVEABLE ACCESS THROUGHOUT ALL PHASES OF CONSTRUCTION

FILENAME: 6232A-D002A.dwg LAST UPDATED: 01/30/2012 03:07 PM LAST SAVED BY: ewalker

No.	DATE	REVISIONS	APPROVED

DESIGNED: SMC
DRAWN: SMC
CHECKED: JTO

RBF CONSULTING

carollo

IRVINE RANCH WATER DISTRICT

STEVEN M. COOK	RCE NO. 76947	PROJECT ENGINEER	DATE
CINDY MILLER	RCE NO. 58116	PROJECT MANAGER	DATE
PATRICIA UEMATSU	RCE NO. 36762	PRINCIPAL ENGINEER	DATE

IRVINE RANCH WATER DISTRICT
BAKER WATER TREATMENT PLANT
PROJECT NO. 11218

CONTRACTOR ACCESS AND SITE USE

DRAWING D002A

SHEET 17 OF 632

NOTES

1. SPECIAL CONSTRUCTION REQUIREMENTS APPLY WITH SAC AND MWD EASEMENTS. SEE SPECIFICATIONS.
2. PIPING ON THIS SHEET IS TO BE CONSTRUCTED BEFORE PIPING SHOWN ON DWGS C025 THROUGH C035
3. SEE PIPING DEMOLITION PLANS IN COORDINATION WITH THE NEW PIPING SHOWN ON THIS SHEET.
4. SEE SEQUENCE PLAN IN SPECIFICATIONS.
5. CONTRACTOR TO MAINTAIN SERVICE TO NEW AND EXISTING FIRE HYDRANTS DURING CONSTRUCTION.

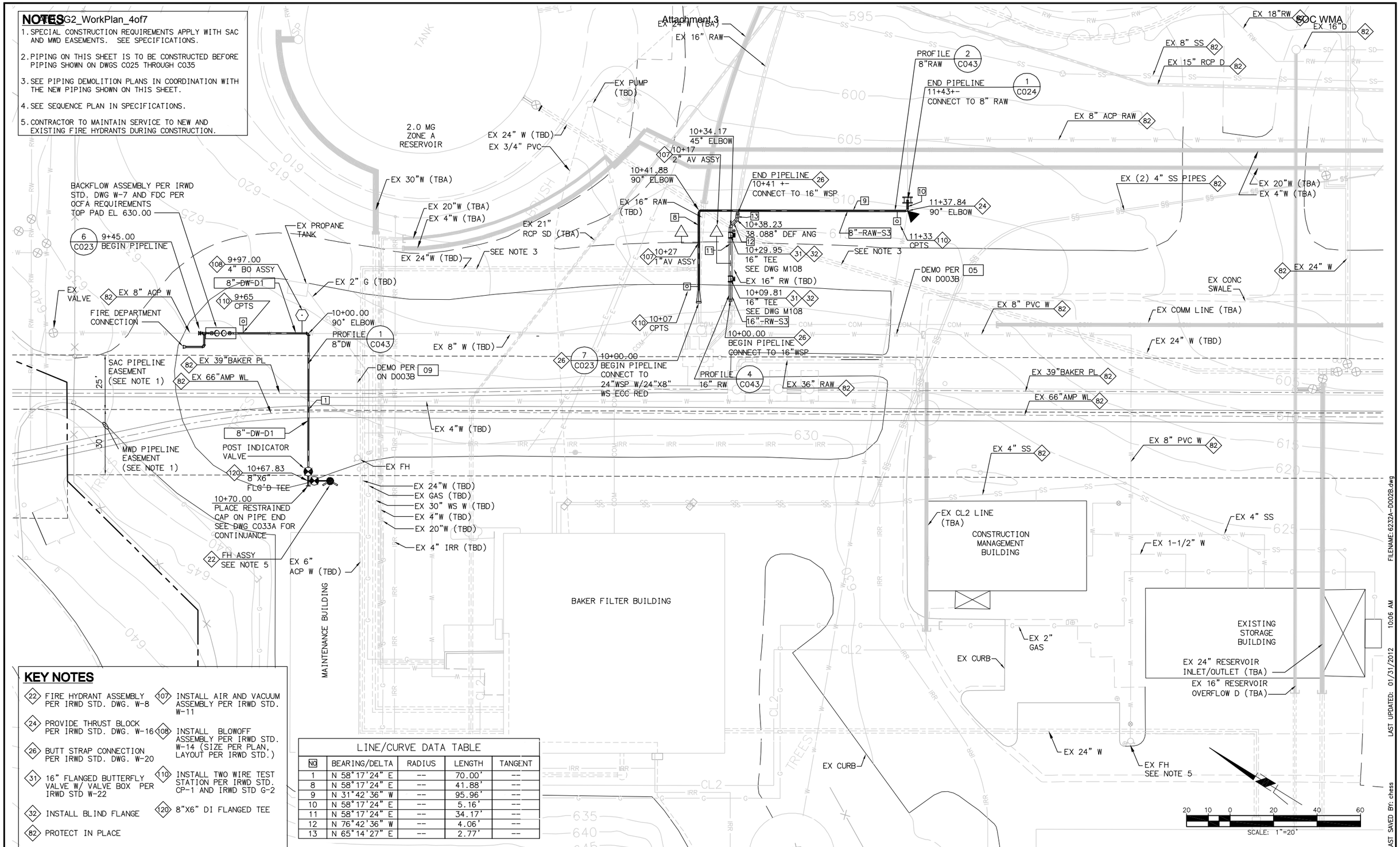

KEY NOTES

- 22 FIRE HYDRANT ASSEMBLY PER IRWD STD. DWG. W-8
- 24 PROVIDE THRUST BLOCK PER IRWD STD. DWG. W-16
- 26 BUTT STRAP CONNECTION PER IRWD STD. DWG. W-20
- 31 16" FLANGED BUTTERFLY VALVE W/ VALVE BOX PER IRWD STD W-22
- 32 INSTALL BLIND FLANGE
- 82 PROTECT IN PLACE
- 107 INSTALL AIR AND VACUUM ASSEMBLY PER IRWD STD. W-11
- 108 INSTALL BLOWOFF ASSEMBLY PER IRWD STD. W-14 (SIZE PER PLAN, LAYOUT PER IRWD STD.)
- 110 INSTALL TWO WIRE TEST STATION PER IRWD STD. CP-1 AND IRWD STD G-2
- 120 8"X6" DI FLANGED TEE

LINE/CURVE DATA TABLE

NO	BEARING/DELTA	RADIUS	LENGTH	TANGENT
1	N 58°17'24" E	--	70.00'	--
8	N 58°17'24" E	--	41.88'	--
9	N 31°42'36" W	--	95.96'	--
10	N 58°17'24" E	--	5.16'	--
11	N 58°17'24" E	--	34.17'	--
12	N 76°42'36" W	--	4.06'	--
13	N 65°14'27" E	--	2.77'	--

FILENAME: 6232A-D002B.dwg
LAST UPDATED: 01/31/2012 10:06 AM
LAST SAVED BY: chess

No.	DATE	REVISIONS	APPROVED

DESIGNED: CBH
DRAWN: DDT
CHECKED: CLM

RBF CONSULTING
carollo
IRVINE RANCH WATER DISTRICT

COREY HESS	RCE NO. 68499	PROJECT ENGINEER	DATE
CINDY MILLER	RCE NO. 58116	PROJECT MANAGER	DATE
PATRICIA UEMATSU	RCE NO. 36762	PRINCIPAL ENGINEER	DATE

IRVINE RANCH WATER DISTRICT
BAKER WATER TREATMENT PLANT
PROJECT NO. 11218

UTILITY RELOCATIONS

DRAWING D002B
SHEET 18 OF 632

MATCHLINE SEE DWG D004A

MATCHLINE SEE DWG D005A

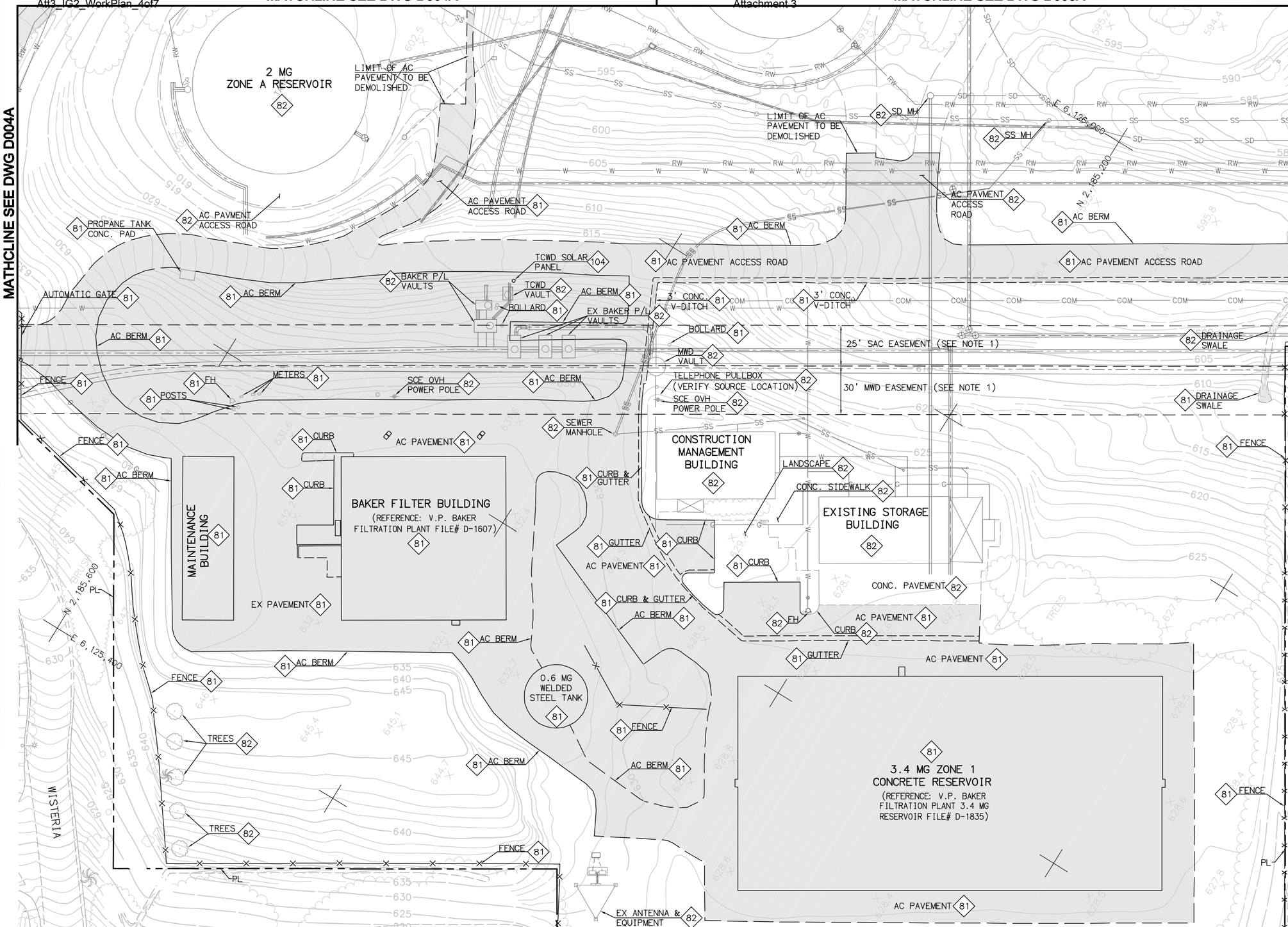

MATCHLINE SEE DWG D005A

KEY NOTES

- 81 DEMOLISH
- 82 PROTECT IN PLACE
- 104 REMOVE AND DELIVER TO IRWD

NOTES

1. SPECIAL CONSTRUCTION REQUIREMENTS APPLY WITHIN SAC AND MWD EASEMENTS. SEE SPECIFICATIONS.
2. GATES AND FENCE TO BE REMOVED ONLY AFTER NEW WISTERIA GATE AND FENCING ARE INSTALLED. SEE DWG C020.
3. SEE DWG D003B FOR DEMOLITION OF BELOW GRADE UTILITIES.

LEGEND

AREA OF EXISTING IMPROVEMENTS TO BE DEMOLISHED AND REMOVED. INCLUDES, BUT IS NOT LIMITED TO, EXISTING BUILDINGS, STRUCTURES, PAVEMENT, CURB, GUTTER, UTILITY VAULTS, STORED MATERIAL, DEBRIS AND FENCING. UNLESS OTHERWISE NOTED.

SCALE: 1"=30'

30 15 0 30 60 90

SCALE: 1"=30'

FILENAME: 6232A-D003A.dwg
LAST UPDATED: 01/23/2012 02:37 PM
LAST SAVED BY: chess

No.	DATE	REVISIONS	APPROVED

DESIGNED:
DRAWN:
CHECKED:

RBF CONSULTING
carollo
IRVINE RANCH WATER DISTRICT

STEVEN M. COOK	RCE NO. 76947	PROJECT ENGINEER	DATE
CINDY MILLER	RCE NO. 58116	PROJECT MANAGER	DATE
PATRICIA UEMATSU	RCE NO. 36762	PRINCIPAL ENGINEER	DATE

IRVINE RANCH WATER DISTRICT
BAKER WATER TREATMENT PLANT
PROJECT NO. 11218

DEMOLITION PLAN AREA-1 ABOVE AND AT GRADE

DRAWING D003A

SHEET 19 OF 632

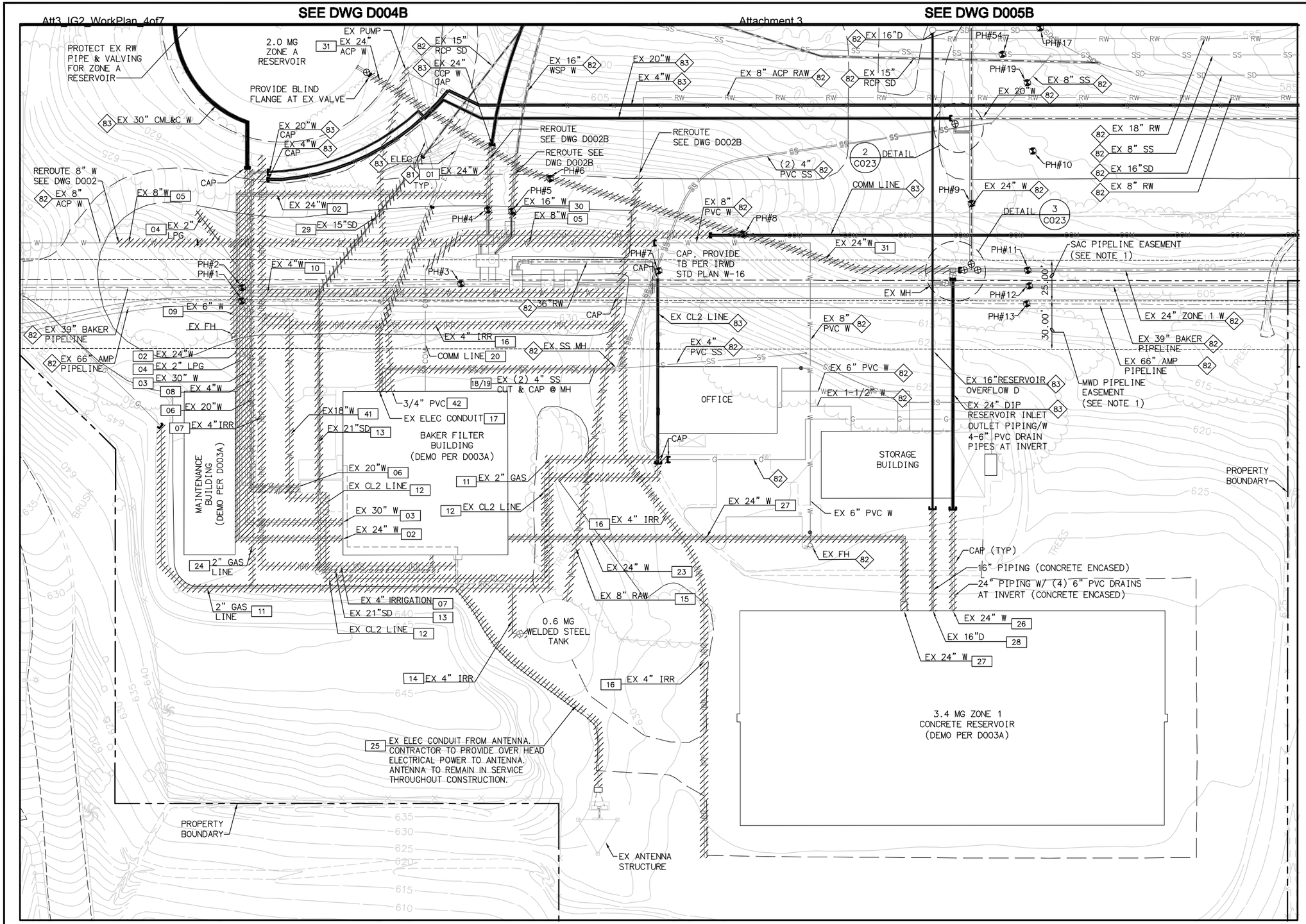

KEY NOTES

- 82 PROTECT IN PLACE
- 83 ABANDON IN PLACE

LEGEND

- DEMOLISH AND REMOVE FROM SITE
- SEAL PIPE PER GENERAL NOTES ON DWG D001A UNLESS OTHERWISE NOTED ON PLAN.
- XX — EXISTING PIPE DEMO PER IDENTIFICATION NUMBER 81
- PIPING TO BE SEALED AND ABANDONED IN PLACE
- POTHOLE LOCATION & NUMBER

SEE PIPE DEMOLITION SCHEDULE ON D001B

NOTES

1. SPECIAL CONSTRUCTION REQUIREMENTS APPLY WITH SAC AND MWD EASEMENTS. SEE SPECIFICATIONS.

FILENAME: 6232A-D003B.dwg
LAST UPDATED: 01/30/2012 03:45 PM
LAST SAVED BY: drujillo

No.	DATE	REVISIONS	APPROVED

DESIGNED: CBH
DRAWN: DDT
CHECKED: CLM

RBF CONSULTING
carollo
IRVINE RANCH WATER DISTRICT

COREY HESS	RCE NO. 68499	PROJECT ENGINEER	DATE
CINDY MILLER	RCE NO. 58116	PROJECT MANAGER	DATE
PATRICIA UEMATSU	RCE NO. 36762	PRINCIPAL ENGINEER	DATE

IRVINE RANCH WATER DISTRICT
BAKER WATER TREATMENT PLANT
PROJECT NO. 11218

DEMOLITION PLAN AREA-1 BELOW GRADE

DRAWING D003B
SHEET 20 OF 632

SOC WMA

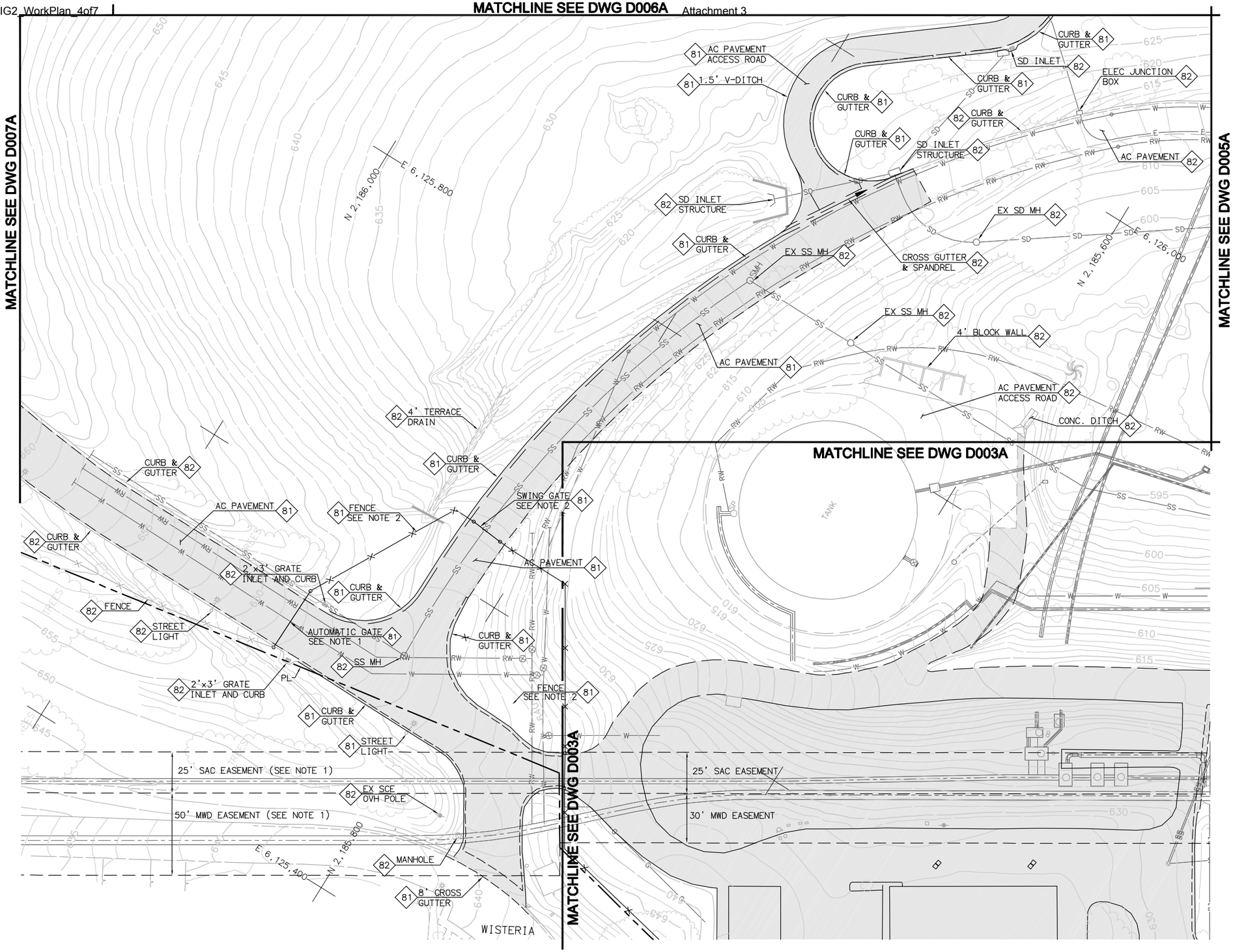

KEY NOTES

81 DEMOLISH

82 PROTECT IN PLACE

NOTES

1. SPECIAL CONSTRUCTION REQUIREMENTS APPLY WITHIN SAC AND MWD EASEMENTS. SEE SPECIFICATIONS.

2. GATES AND FENCE TO BE REMOVED ONLY AFTER NEW WISTERIA GATE AND FENCING ARE INSTALLED. SEE DWG C020.

3. SEE DWG D004B FOR DEMOLITION OF BELOW GRADE UTILITIES.

LEGEND

AREA OF EXISTING IMPROVEMENTS TO BE DEMOLISHED AND REMOVED. INCLUDES, BUT IS NOT LIMITED TO, EXISTING BUILDINGS, STRUCTURES, PAVEMENT, CURB, GUTTER, UTILITY VAULTS, STORED MATERIAL, DEBRIS AND FENCING. UNLESS OTHERWISE NOTED.

SCALE: 1"=30'

30 15 0 30 60 90

SCALE: 1"=30'

LAST SAVED BY: chess LAST UPDATED: 01/31/2012 10:09 AM FILENAME: 6232A-D004A.dwg

No.	DATE	REVISIONS	APPROVED

DESIGNED: SMC
DRAWN: SMC
CHECKED: JTO

RBF CONSULTING

carollo

IRVINE RANCH WATER DISTRICT

STEVEN M. COOK	RCE NO. 76947	PROJECT ENGINEER	DATE
CINDY MILLER	RCE NO. 58116	PROJECT MANAGER	DATE
PATRICIA UEMATSU	RCE NO. 36762	PRINCIPAL ENGINEER	DATE

IRVINE RANCH WATER DISTRICT
BAKER WATER TREATMENT PLANT
PROJECT NO. 11218

DEMOLITION PLAN AREA-2 ABOVE AND AT GRADE

DRAWING D004A

SHEET 21 OF 632

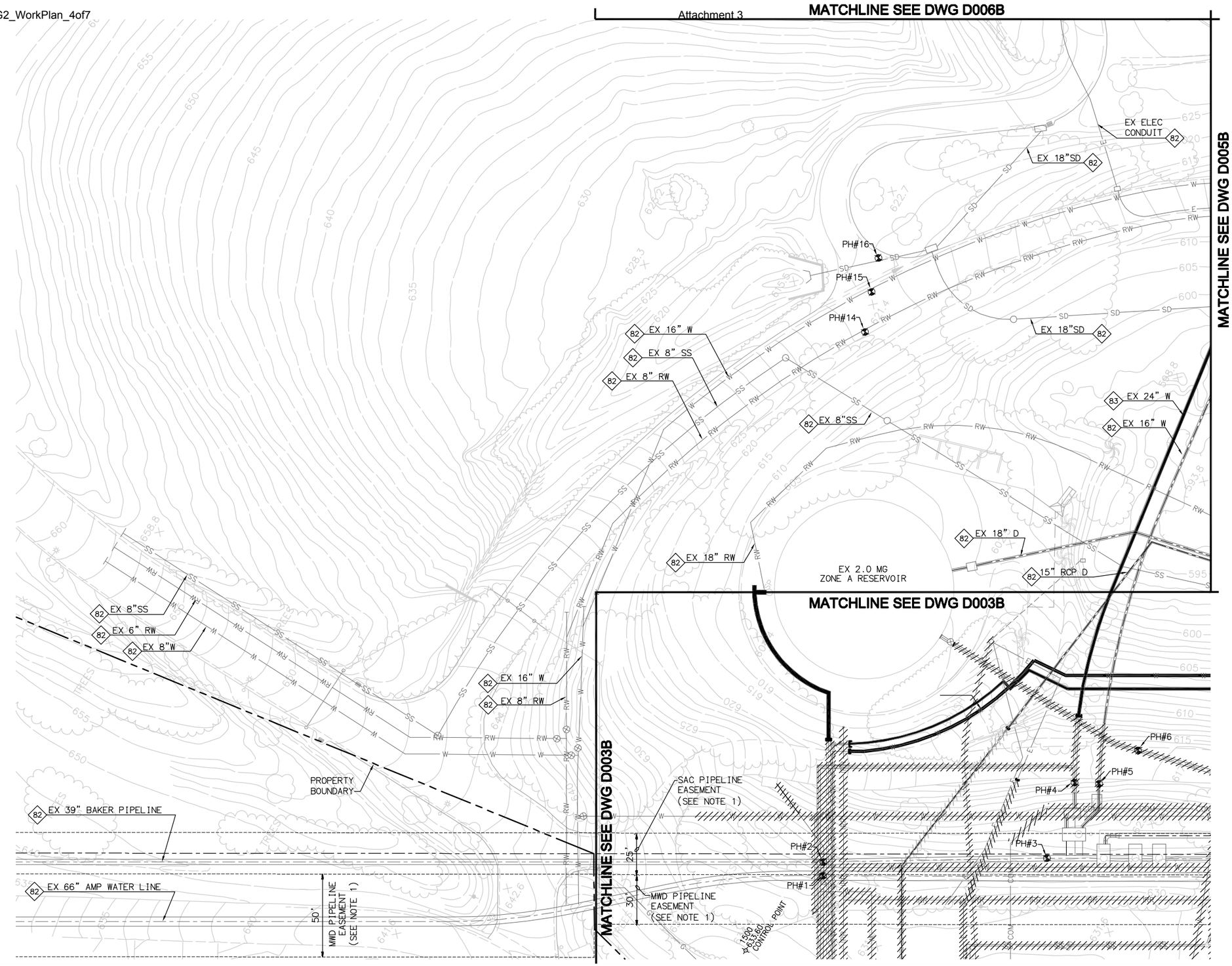

KEY NOTES

82 PROTECT IN PLACE

83 ABANDON IN PLACE

LEGEND

DEMOLISH AND REMOVE FROM SITE

SEAL PIPE PER GENERAL NOTES ON DWG D001A UNLESS OTHERWISE NOTED ON PLAN.

XX — EXISTING PIPE DEMO PER IDENTIFICATION NUMBER 81

PIPING TO BE SEALED AND ABANDONED IN PLACE

POTHOLE LOCATION & NUMBER

SEE PIPE DEMOLITION SCHEDULE ON D001B

NOTES

1. SPECIAL CONSTRUCTION REQUIREMENTS APPLY WITH SAC AND MWD EASEMENTS. SEE SPECIFICATIONS.

FILENAME: 6232A-D004B.dwg

LAST UPDATED: 01/31/2012 10:23 AM

LAST SAVED BY: chess

No.	DATE	REVISIONS	APPROVED

DESIGNED: CBH
DRAWN: DDT
CHECKED: CLM

RBF CONSULTING

carollo

IRVINE RANCH WATER DISTRICT

COREY HESS	RCE NO. 68499	PROJECT ENGINEER	DATE
CINDY MILLER	RCE NO. 58116	PROJECT MANAGER	DATE
PATRICIA UEMATSU	RCE NO. 36762	PRINCIPAL ENGINEER	DATE

IRVINE RANCH WATER DISTRICT
BAKER WATER TREATMENT PLANT
PROJECT NO. 11218

DEMOLITION PLAN AREA-2 BELOW GRADE

DRAWING D004B

SHEET 22 OF 632

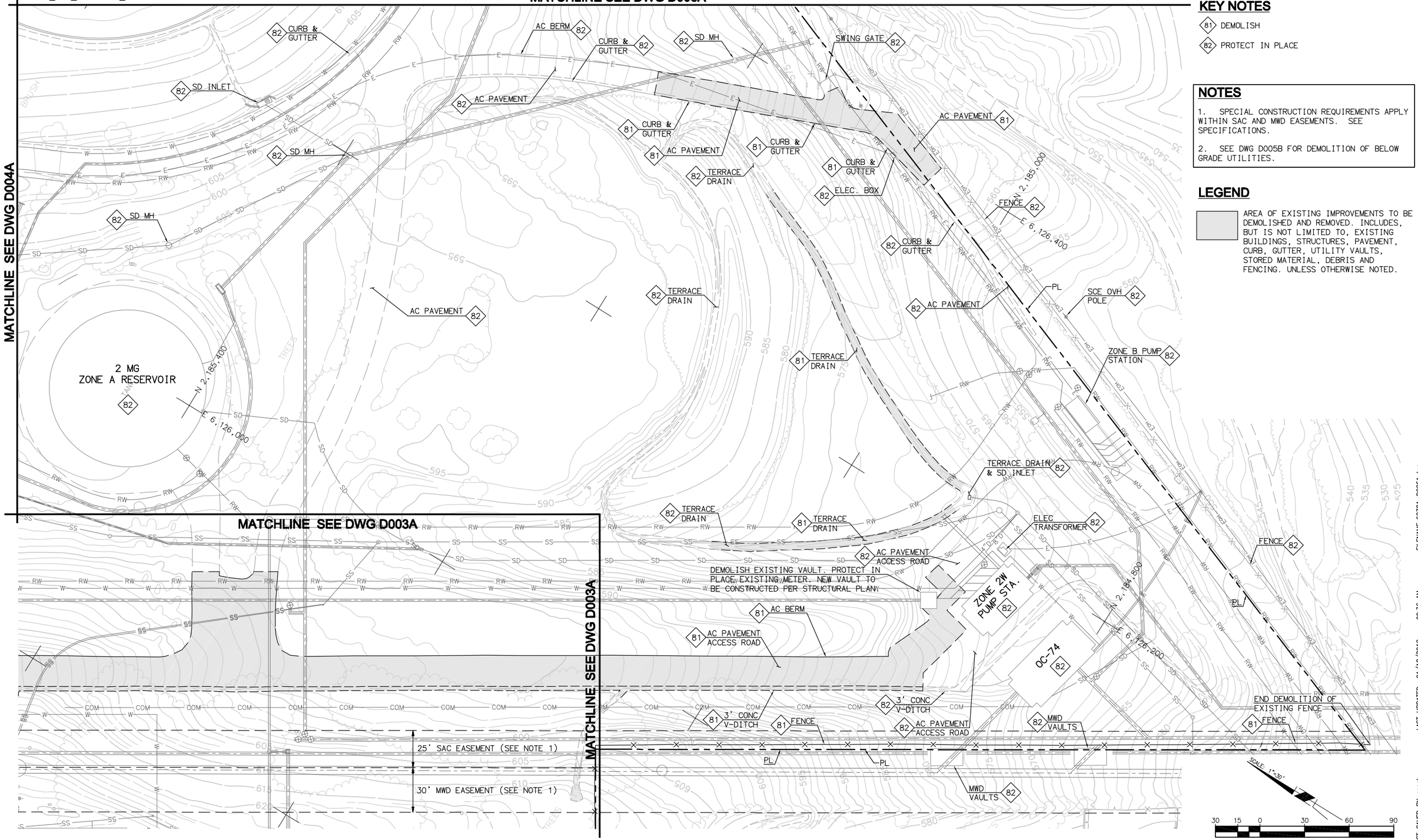

KEY NOTES

81 DEMOLISH

82 PROTECT IN PLACE

NOTES

1. SPECIAL CONSTRUCTION REQUIREMENTS APPLY WITHIN SAC AND MWD EASEMENTS. SEE SPECIFICATIONS.

2. SEE DWG D005B FOR DEMOLITION OF BELOW GRADE UTILITIES.

LEGEND

AREA OF EXISTING IMPROVEMENTS TO BE DEMOLISHED AND REMOVED. INCLUDES, BUT IS NOT LIMITED TO, EXISTING BUILDINGS, STRUCTURES, PAVEMENT, CURB, GUTTER, UTILITY VAULTS, STORED MATERIAL, DEBRIS AND FENCING. UNLESS OTHERWISE NOTED.

FILENAME: 6232A-D005A.dwg
LAST UPDATED: 01/18/2012 09:36 AM
LAST SAVED BY: scook

No.	DATE	REVISIONS	APPROVED

DESIGNED:
DRAWN:
CHECKED:

RBF CONSULTING
carollo
IRVINE RANCH WATER DISTRICT

STEVEN M. COOK	RCE NO. 76947	PROJECT ENGINEER	DATE
CINDY MILLER	RCE NO. 58116	PROJECT MANAGER	DATE
PATRICIA UEMATSU	RCE NO. 36762	PRINCIPAL ENGINEER	DATE

IRVINE RANCH WATER DISTRICT
BAKER WATER TREATMENT PLANT
PROJECT NO. 11218

DEMOLITION PLAN AREA-3 ABOVE AND AT GRADE

DRAWING
D005A
SHEET
23 OF 632

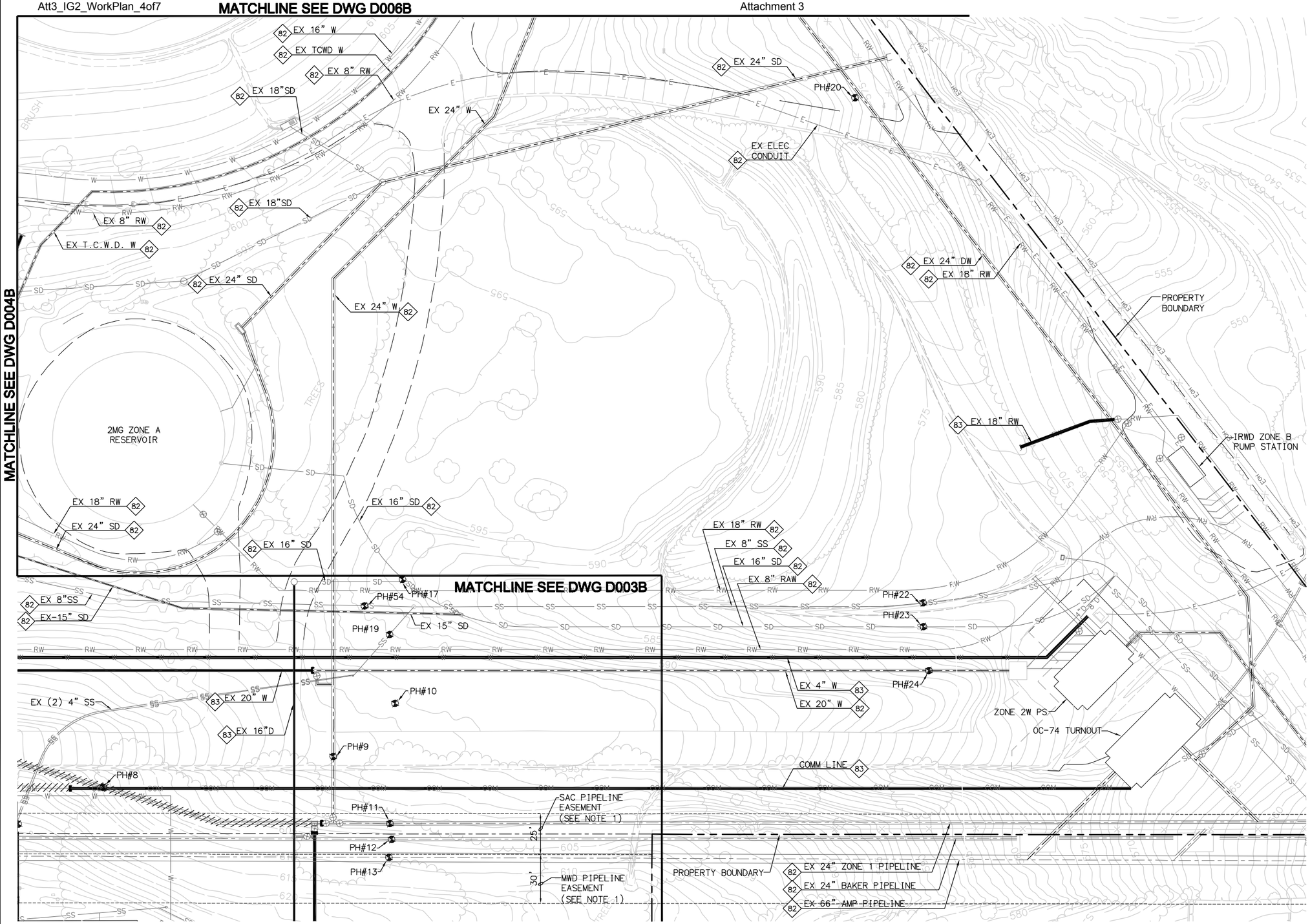

KEY NOTES

82 PROTECT IN PLACE

83 ABANDON IN PLACE

LEGEND

DEMOLISH AND REMOVE FROM SITE

SEAL PIPE PER GENERAL NOTES ON DWG D001A UNLESS OTHERWISE NOTED ON PLAN.

XX — EXISTING PIPE DEMO PER IDENTIFICATION NUMBER 81

PIPING TO BE SEALED AND ABANDONED IN PLACE

POTHOLE LOCATION & NUMBER

SEE PIPE DEMOLITION SCHEDULE ON D001B

NOTES

1. SPECIAL CONSTRUCTION REQUIREMENTS APPLY WITH SAC AND MWD EASEMENTS. SEE SPECIFICATIONS.

SCALE: 1"=30'

30 15 0 30 60 90

SCALE: 1"=30'

FILENAME: 6232A-D005B.dwg

LAST UPDATED: 01/30/2012 03:09 PM

LAST SAVED BY: drujillo

No.	DATE	REVISIONS	APPROVED

DESIGNED: CBH

DRAWN: DDT

CHECKED: CLM

RBF CONSULTING

carollo

IRVINE RANCH WATER DISTRICT

COREY HESS	RCE NO. 68499	PROJECT ENGINEER	DATE
CINDY MILLER	RCE NO. 58116	PROJECT MANAGER	DATE
PATRICIA UEMATSU	RCE NO. 36762	PRINCIPAL ENGINEER	DATE

IRVINE RANCH WATER DISTRICT
BAKER WATER TREATMENT PLANT
PROJECT NO. 11218

DEMOLITION PLAN AREA-3 BELOW GRADE

DRAWING D005B

SHEET 24 OF 632

SOC WMA

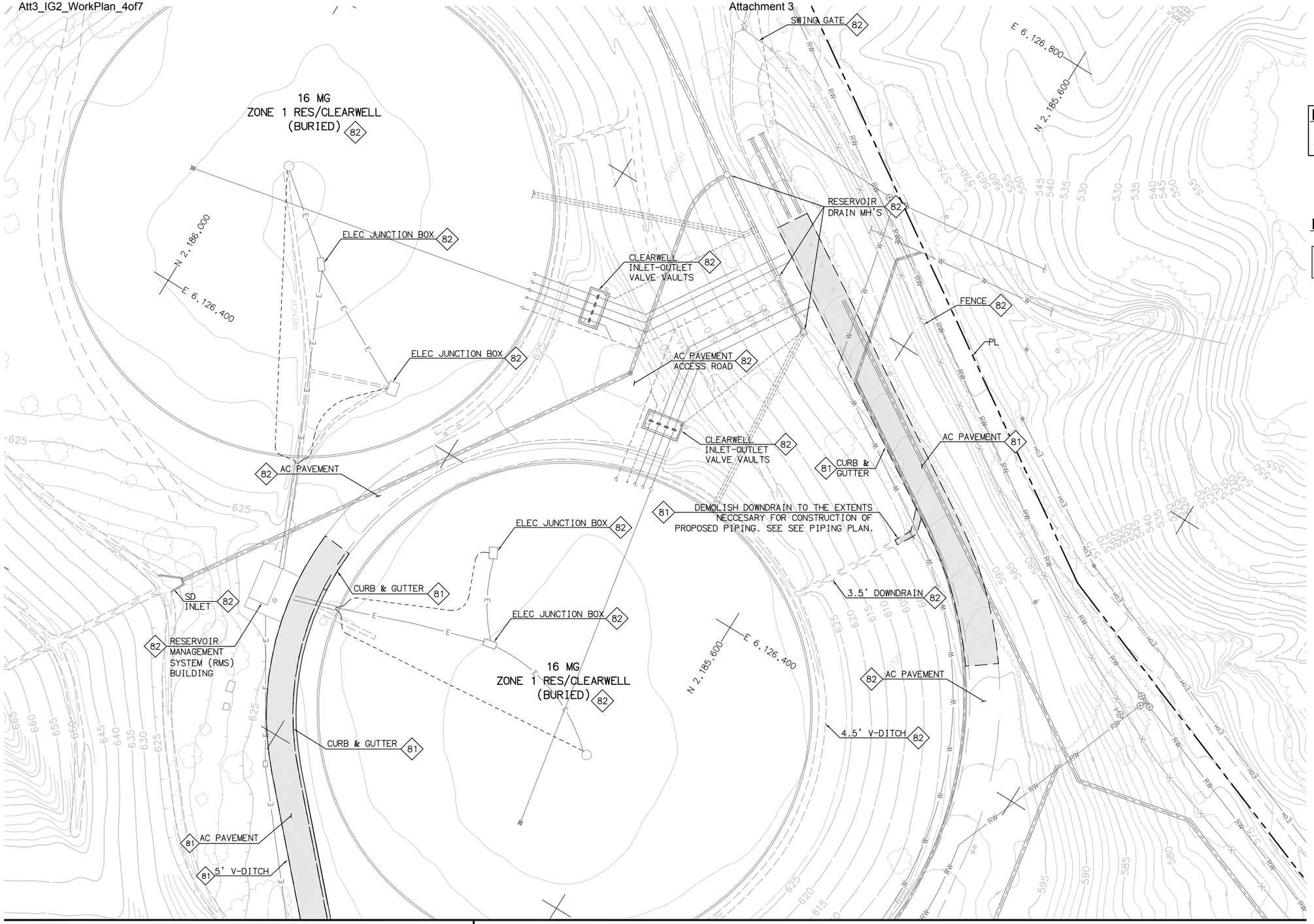

MATCHLINE SEE DWG D004B

MATCHLINE SEE DWG D005A

KEY NOTES

81 DEMOLISH

82 PROTECT IN PLACE

NOTES

1. SEE DWG D006B FOR DEMOLITION OF BELOW GRADE UTILITIES.

LEGEND

AREA OF EXISTING IMPROVEMENTS TO BE DEMOLISHED AND REMOVED. INCLUDES, BUT IS NOT LIMITED TO, EXISTING BUILDINGS, STRUCTURES, PAVEMENT, CURB, GUTTER, UTILITY VAULTS, STORED MATERIAL, DEBRIS AND FENCING. UNLESS OTHERWISE NOTED.

SCALE: 1"=30'

30 15 0 30 60 90

SCALE: 1"=30'

LAST SAVED BY: chess LAST UPDATED: 01/23/2012 07:31 PM FILENAME: 6232A-D006A.dwg

No.	DATE	REVISIONS	APPROVED

DESIGNED: SMC
DRAWN: SMC
CHECKED: JTO

RBF CONSULTING

carollo

IRVINE RANCH WATER DISTRICT

STEVEN M. COOK	RCE NO. 76947	PROJECT ENGINEER	DATE
CINDY MILLER	RCE NO. 58116	PROJECT MANAGER	DATE
PATRICIA UEMATSU	RCE NO. 36762	PRINCIPAL ENGINEER	DATE

IRVINE RANCH WATER DISTRICT
BAKER WATER TREATMENT PLANT
PROJECT NO. 11218

DEMOLITION PLAN AREA-4 ABOVE AND AT GRADE

DRAWING D006A

SHEET 25 OF 632

SOC WMA

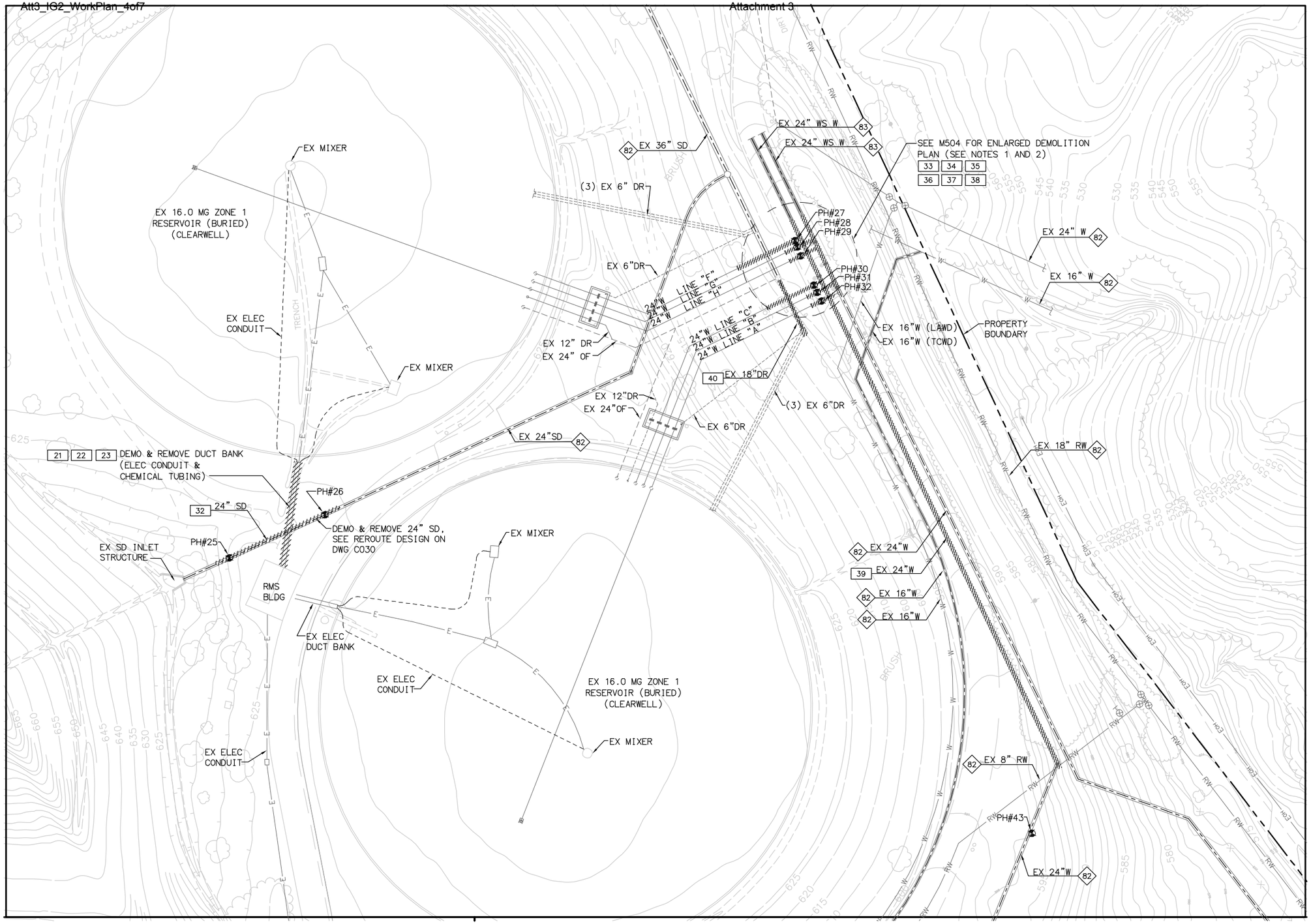

KEY NOTES

82 PROTECT IN PLACE

83 ABANDON IN PLACE

LEGEND

DEMOLISH AND REMOVE FROM SITE

SEAL PIPE PER GENERAL NOTES ON DWG D001A UNLESS OTHERWISE NOTED ON PLAN.

XX — EXISTING PIPE DEMO PER IDENTIFICATION NUMBER 81

PIPING TO BE SEALED AND ABANDONED IN PLACE

POTHOLE LOCATION & NUMBER

SEE PIPE DEMOLITION SCHEDULE ON D001B

NOTES

1. SEE SEQUENCE PLAN IN SPECIFICATIONS.
2. SEE WORK RESTRICTIONS IN SPECIFICATIONS.

30 15 0 30 60 90

SCALE: 1"=30'

MATCHLINE SEE DWG D004B

MATCHLINE SEE DWG D005B

LAST SAVED BY: chess LAST UPDATED: 01/31/2012 10:15 AM FILENAME:6232A-D006B.dwg

No.	DATE	REVISIONS	APPROVED

DESIGNED: CBH
DRAWN: DDT
CHECKED: CLM

RBF CONSULTING

carollo

IRVINE RANCH WATER DISTRICT

COREY HESS	RCE NO. 68499	PROJECT ENGINEER	DATE
CINDY MILLER	RCE NO. 58116	PROJECT MANAGER	DATE
PATRICIA UEMATSU	RCE NO. 36762	PRINCIPAL ENGINEER	DATE

IRVINE RANCH WATER DISTRICT
BAKER WATER TREATMENT PLANT
PROJECT NO. 11218

DEMOLITION PLAN AREA-4 BELOW GRADE

DRAWING **D006B**

SHEET **26** OF **632**

SOC WMA

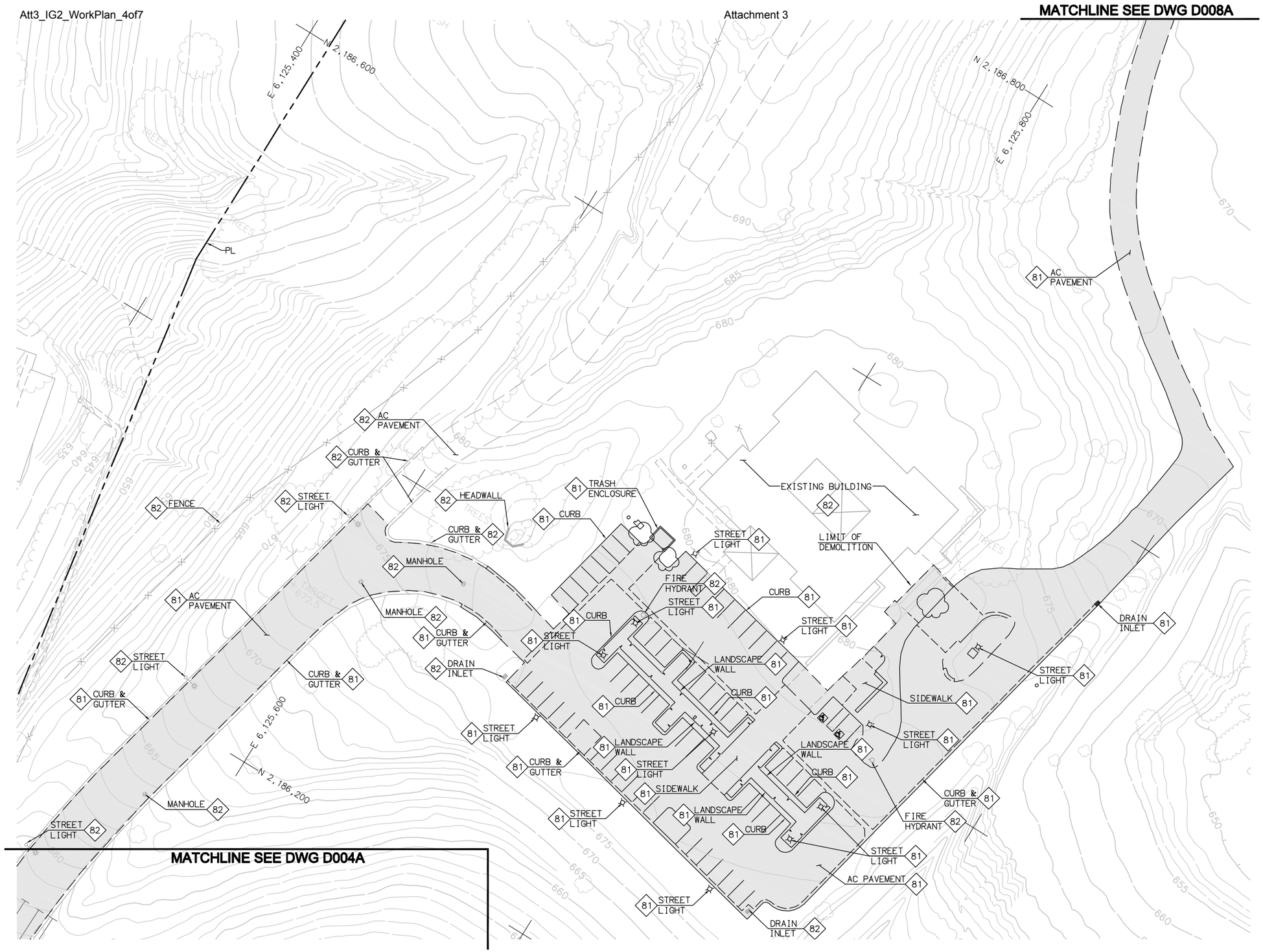

KEY NOTES

81 DEMOLISH

82 PROTECT IN PLACE

NOTES

1. PROTECT IN PLACE ALL EXISTING UNDERGROUND UTILITY PIPELINES, CONDUITS, VAULTS, ETC... UNLESS OTHERWISE SPECIFIED

LEGEND

AREA OF EXISTING IMPROVEMENTS TO BE DEMOLISHED AND REMOVED. INCLUDES, BUT IS NOT LIMITED TO, EXISTING BUILDINGS, STRUCTURES, PAVEMENT, CURB, GUTTER, UTILITY VAULTS, STORED MATERIAL, DEBRIS AND FENCING. UNLESS OTHERWISE NOTED.

30 15 0 30 60 90

SCALE: 1"=30'

SCALE 1"=30'

FILENAME: 6232A-D007A.dwg

LAST UPDATED: 01/31/2012 10:11 AM

LAST SAVED BY: chess

No.	DATE	REVISIONS	APPROVED

DESIGNED: SMC

DRAWN: SMC

CHECKED: JTO

RBF CONSULTING

carollo

IRVINE RANCH WATER DISTRICT

STEVEN M. COOK	RCE NO. 76947	PROJECT ENGINEER	DATE
CINDY MILLER	RCE NO. 58116	PROJECT MANAGER	DATE
PATRICIA UEMATSU	RCE NO. 36762	PRINCIPAL ENGINEER	DATE

IRVINE RANCH WATER DISTRICT
BAKER WATER TREATMENT PLANT
PROJECT NO. 11218

DEMOLITION PLAN AREA-5 ABOVE AND AT GRADE

DRAWING D007A

SHEET 27 OF 632

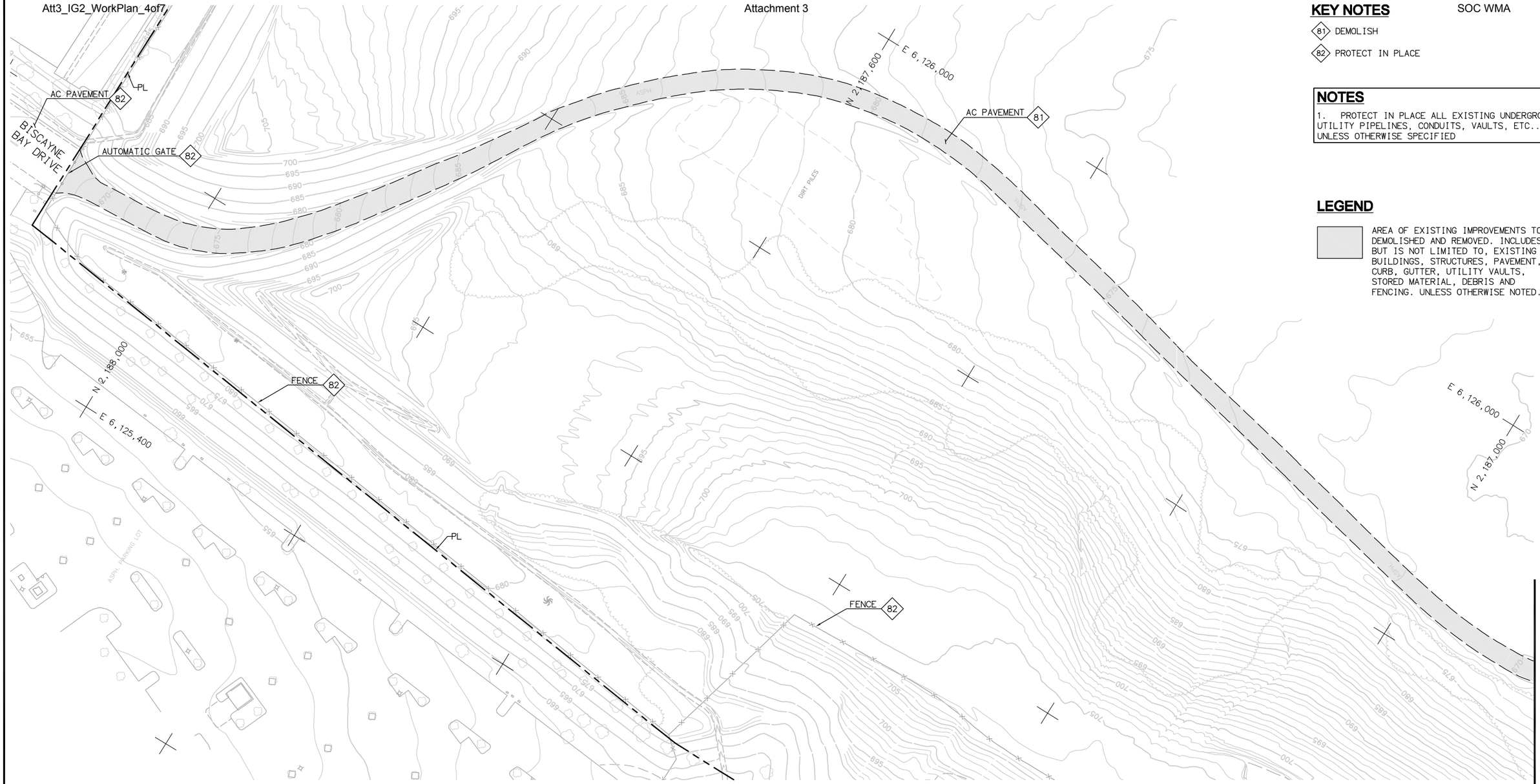

KEY NOTES

81 DEMOLISH

82 PROTECT IN PLACE

NOTES

1. PROTECT IN PLACE ALL EXISTING UNDERGROUND UTILITY PIPELINES, CONDUITS, VAULTS, ETC... UNLESS OTHERWISE SPECIFIED

LEGEND

AREA OF EXISTING IMPROVEMENTS TO BE DEMOLISHED AND REMOVED. INCLUDES, BUT IS NOT LIMITED TO, EXISTING BUILDINGS, STRUCTURES, PAVEMENT, CURB, GUTTER, UTILITY VAULTS, STORED MATERIAL, DEBRIS AND FENCING. UNLESS OTHERWISE NOTED.

MATCHLINE SEE DWG D007A

LAST UPDATED: 01/23/2012 02:58 PM FILENAME: 6232A-D008A.dwg

LAST SAVED BY: chess

SCALE: 1"=40'

40 20 0 40 80 120

SCALE: 1"=40'

No.	DATE	REVISIONS	APPROVED

DESIGNED: SMC

DRAWN: SMC

CHECKED: JTO

RBF CONSULTING

carollo

IRVINE RANCH WATER DISTRICT

STEVEN M. COOK	RCE NO. 76947	PROJECT ENGINEER	DATE
CINDY MILLER	RCE NO. 58116	PROJECT MANAGER	DATE
PATRICIA UEMATSU	RCE NO. 36762	PRINCIPAL ENGINEER	DATE

IRVINE RANCH WATER DISTRICT
BAKER WATER TREATMENT PLANT
PROJECT NO. 11218

DEMOLITION PLAN AREA-6 ABOVE AND AT GRADE

DRAWING D008A

SHEET 28 OF 632

Att3_IG2_WorkPlan_4of7

SITE PLAN LEGEND

- ASPHALT CONCRETE
- AGGREGATE BASE
- CRUSHED ROCK SURFACING
- GRATING
- SOIL CEMENT
- GROUND
- SHOTCRETE
- DEMOLISH
- 2:1 — NEW EMBANKMENT, SLOPE AS INDICATED
- BUSHES, TREES, GROUND COVER

SYMBOLS

- ℄ — CENTERLINE
- PL — PROPERTY LINE
- NEW FENCE
- EXISTING FENCE
- 123 — CONTOUR LINE, PROPOSED FINISHED GRADE
- 123 — CONTOUR LINE, EXISTING GRADE
- 123.20 — FINISHED SPOT ELEVATION
- (123.20) — EXISTING SPOT ELEVATION
- E — EXISTING UNDERGROUND ELECTRIC POWER
- T — EXISTING TELEPHONE LINE
- CTV — EXISTING CABLE TV LINE
- G — EXISTING GAS MAIN
- PP — EXISTING POWER POLE
- EOH — EXISTING OVERHEAD ELECTRICAL (CALLOUT ON PLANS IF LESS THAN 12' HIGH)
- S — EXISTING SEWER MAIN
- FIRE HYDRANT
- WM — WATER METER
- CATHODIC PROTECTION TEST STATION
- AIR & VACUUM VALVE ASSEMBLY
- BLOW-OFF ASSEMBLY
- END CAP
- THRUST BLOCK
- PLUG
- W — EXISTING WATER LINE
- EXISTING STORM DRAIN
- EXISTING VALVE

PIPE AND FITTING SYMBOLS

DOUBLE LINE	SINGLE LINE	
		FLEXIBLE COUPLING
		ELBOW UP
		ELBOW DOWN
		TEE UP
		TEE DOWN
		CONCENTRIC REDUCER
		ECCENTRIC REDUCER
		ELBOW, 90 DEGREE
		CROSS
		TEE
		ELBOW, 45 DEGREE
		LATERAL
		WELDED JOINT
		GROOVED END JOINT
		FLANGED JOINT
		MECHANICAL JOINT
		BELL & SPIGOT JOINT

VALVES

	AIR RELEASE VALVE		GATE VALVE
	BUTTERFLY VALVE		PLUG VALVE
	BALL VALVE	S	SOLENOID VALVE
	CHECK VALVE		STRAINER
	SILENT CHECK VALVE		

Attachment 3 PIPE SCHEDULE

ABBREV.	SERVICE	TEST METHOD	MINIMUM TEST PRESSURE (PSI)
UTILITIES AND GENERAL SERVICE			
BD	BOTTOM DRAIN	GR	--
BDR	BASIN DRAIN LINE	GR	--
CAW	CHANNEL AGITATION WATER	HH	50
CD	CHEMICAL DRAIN	GR	--
CDT	CONDUIT	--	--
CLW	CLEAR WATER WASTE	GR	--
CLV	CLEAR WATER VENT	GR	--
CWR	COOLING WATER RETURN	HH	NOTE 2
CWS	COOLING WATER SUPPLY	HH	NOTE 2
CW	POTABLE COLD WATER	--	NOTE 2
DR	DRAIN – PROCESS AREA	GR	--
EL	ELECTRICAL CONDUIT/DUCTBANK	--	--
FPW	FIRE PROTECTION WATER	--	NOTE 3
GS	GRAVITY SEWER	GR	--
HW	POTABLE HOT WATER	--	NOTE 2
IRR	IRRIGATION WATER (MUNICIPAL)	--	NOTE 2
MPG	MEDIUM PRESSURE GAS	--	--
OF	OVERFLOW	GR	--
SS	SANITARY SEWER	--	NOTE 2
SA	SAMPLE LINE	HH	150
SAN	SANITARY WASTE	--	NOTE 2
SD	STORM DRAIN	--	NOTE 2
SPD	SUMP PUMP DISCHARGE	LH	20
SPW	SOFTENED POTABLE WATER	--	NOTE 2
SUC	STRUCTURAL UNDERDRAIN COLLECTION	GR	--
SUW1	SOFTENED UTILITY WATER 1	HH	150
SV	SANITARY VENT	--	NOTE 2
UW1	UTILITY WATER 1	HH	150
UW2	UTILITY WATER 2	HH	150
SUW2	SOFTENED UTILITY WATER 2	HH	150

PIPE SCHEDULE SOC WMA

ABBREV.	SERVICE	TEST METHOD	MINIMUM TEST PRESSURE (PSI)
MAJOR PROCESS PIPING			
FLW	FILTERED WATER	LH	20
MFWW	MEMBRANE FILTRATION WASTE WASHWATER	LH	20
MFW	MEMBRANE FEED WATER	HH	150
NTR	NEUTRALIZED CLEAN IN PLACE SOLUTION	LH	20
PW	PRODUCT WATER	HH	NOTE 4
R	RESIDUALS		
RW	RAW WATER	HH	150
STW	SETTLED WATER		
SWW	STRAINER WASTE WASHWATER	LH	20
SL	SLUDGE	GR	--
XR	EXCESS RECIRCULATION (PALL)	LH	20
CHEMICALS			
CP	CARRIER PIPE	HH	150
PC	PRIMARY COAGULANT	HH	150
AA	AQUEOUS AMMONIA	HH	150
CDO	CHLORINE DIOXIDE	HH	150
CS	CAUSTIC SODA	HH	150
CA	CITRIC ACID	HH	150
SB	SODIUM BISULFITE	HH	150
SH	SODIUM HYPOCHLORITE	HH	150
HCL	HYDROCHLORIC ACID	HH	150

NOTES:

1. SEE SPECIFICATION SECTION 15956 FOR TEST METHODS AND LEAKAGE ALLOWANCES.
2. TEST IN ACCORDANCE WITH APPLICABLE PLUMBING AND MECHANICAL CODES.
3. TEST IN ACCORDANCE WITH APPLICABLE NFPA FIRE PROTECTION SYSTEM INSTALLATION CODE (I.E., NFPA 13 AND NFPA 24).

PIPE MATERIAL SCHEDULE

ABBREV.	MATERIAL	FITTINGS
C1	REINFORCED CONCRETE PIPE, ASTM C361	STEEL, AWWA C302
C2	REINFORCED CONCRETE PIPE, ASTM C76	
CU1	COPPER, SOFT TEMPERED TYPE K	COPPER, SOLDERED JOINTS
CU2	COPPER, HARD TEMPERED TYPE L	COPPER, SOLDERED JOINTS
D1	DUCTILE IRON, AWWA, C150, PC150, CEMENT MORTAR LINED, RESTRAINED	DUCTILE IRON, AWWA C110, CL 150
D2	DUCTILE IRON, AWWA, C150, PC150, CEMENT MORTAR LINED, NOT RESTRAINED	DUCTILE IRON, AWWA C110, CL 150
D3	DUCTILE IRON, AWWA, C150, PC150, CORROSION RESISTANT LINING – RESTRAINED	DUCTILE IRON, AWWA C110, CL 150
P1	POLYVINYL CHLORIDE (PVC), SCHED. 80	PVC, SCHED. 80, SOLVENT WELD SOCKET
P2	POLYVINYL CHLORIDE (PVC), SCHED. 40	PVC, SCHED. 40, SOLVENT WELD SOCKET
P3	POLYVINYL CHLORIDE (PVC), AWWA C900, DR18	AWWA C907 INJECTION MOLDED PVC
P4	POLYVINYL CHLORIDE (PVC), AWWA C900, DR14	AWWA C907 INJECTION MOLDED PVC
P7	HIGH DENSITY POLYETHYLENE (HDPE), ASTM D3035, BUTT FUSION JTS, SDR 17	HDPE, BUTT FUSION OR FLANGED
P9	POLYETHYLENE CORRUGATED, SLOTTED, ASTM F405, F667 FILTER WRAPPED	SPLIT OR INTERNAL COUPLER, ASTMF 667
P11	PVC GRAVITY SEWER PIPING, ASTM D3034 OR ASTM F679	SAME AS PIPE MATERIAL
P12	POLYVINYL CHLORIDE (PVC), SCHED. 40	PVC, SCHED. 40 CONTAINMENT
S1	STEEL, SCHED. 40, GALVANIZED	THREADED OR FLANGED, GALVANIZED
S2	WELDED STEEL, AWWA C200, MORTAR LINED AND EPOXY COATED	STEEL, AWWA C208, MORTAR LINED, EPOXY COATED
S2A	WELDED STEEL, AWWA C200, EPOXY LINED AND COATED	STEEL, AWWA C208, EPOXY LINED AND COATED
S2B	WELDED STEEL, AWWA C200, EPOXY LINED AND MORTAR COATED	STEEL, AWWA C208, EPOXY LINED, MORTAR COATED
S3	WELDED STEEL, AWWA C200, MORTAR LINED AND COATED	STEEL, AWWA C208, MORTAR LINED AND COATED
S4	STAINLESS STEEL TYPE 316L, SCHED. 5, FINISHED ACCORDING TO SPEC	TYPE 316L STAINLESS STEEL, JOINTS AS INDICATED IN DRAWINGS
S5	STAINLESS STEEL TYPE 316L, SCHED. 10 OR HIGHER, FINISHED ACCORDING TO SPEC	TYPE 316L STAINLESS STEEL, JOINTS AS INDICATED IN DRAWINGS
S6	STEEL, ASTM A106 OR 53, SCHED. 80, SEAMLESS BLACK	THREADED, SOCKET, BUTT-WELD OR FLANGED W/ AMMONIA UNIONS
S7	STEEL, ASTM A53, SCHED. 40, BLACK (NATURAL GAS)	MALLEABLE 150 PSI THRD. 2" SMALLER, GREATER THAN 2" WELD
S8	STEEL, ASTM A106 OR 53, SCHED. 40, SEAMLESS BLACK	STEEL ANSI B16.9 BUTT-WELDED. FORGED STEEL, SOCKET WELD, ANSI B16.11, OR STEEL ANSI B16.5, 150LB FLANGE.
S9	STAINLESS STEEL TYPE 304L, SCHED. 5, FINISHED ACCORDING TO SPEC.	TYPE 304L STAINLESS STEEL, JOINTS AS INDICATED IN DRAWINGS
S10	STAINLESS STEEL TYPE 304L, SCHED. 10 OR HIGHER, FINISHED ACCORDING. TO SPEC	TYPE 304L STAINLESS STEEL, JOINTS AS INDICATED IN DRAWINGS
S11	STAINLESS STEEL TYPE 304L, SCHED. 80 OR HIGHER, FINISHED ACCORDING TO SPEC	TYPE 304L STAINLESS STEEL, JOINTS AS INDICATED IN DRAWINGS
T6	BRAIDED POLYVINYL CHLORIDE (PVC) TUBING	

TYPICAL PIPE DESIGNATION

MATERIAL ABBREVIATION

2"-SH-P1

PIPE DIAMETER — SERVICE / PROCESS STREAM

DRAWING SUMMARY

#	DESCRIPTION
C001 – C002	GENERAL / TYPICALS
C003 – C007	ROUGH GRADING
C008	STOCKPILE PLAN
C009 – C013	PRECISE GRADING
C014 – C017	HORIZONTAL CONTROL
C018 – C020	RETAINING WALL / FENCING PLANS
C021 – C024	CIVIL DETAILS

DRAWING SUMMARY

#	DESCRIPTION
C025 – C035	YARD PIPING – PLAN DRAWINGS
C035 – C051	YARD PIPING – PROFILE DRAWINGS
C052 – C069	NOT USED
C070 – C075	PRODUCT WATER PIPELINE

DRAWING NUMBER (EXAMPLE)

#	DRAWING
C009	PRECISE GRADING PLAN WTP AREA 1

FILENAME: 6232A-C001.dwg

LAST UPDATED: 01/31/2012 01:22 PM

LAST SAVED BY: dtrujillo

No.	DATE	REVISIONS	APPROVED

DESIGNED: CBH

DRAWN: DDT

CHECKED: CLM

RBF CONSULTING

carollo

IRVINE RANCH WATER DISTRICT

COREY HESS	RCE NO. 68499	PROJECT ENGINEER	DATE
CINDY MILLER	RCE NO. 58116	PROJECT MANAGER	DATE
PATRICIA UEMATSU	RCE NO. 36762	PRINCIPAL ENGINEER	DATE

IRVINE RANCH WATER DISTRICT
BAKER WATER TREATMENT PLANT
PROJECT NO. 11218

TYPICAL SYMBOLS, LEGEND, PIPE DESIGNATION AND SCHEDULE

DRAWING C001

SHEET 29 OF 632

BISCAYNE BAY DRIVE
ACCESS ROAD
STOCKPILE
EX. 16 MG ZONE 1 RES/CLEARWELL (BURIED)
ACCESS ROAD
EX. RMS BULDING
EX. 16 MG ZONE 1 RES/CLEARWELL (BURIED)
EX. ADMINISTRATION BUILDING
ACCESS ROAD
PL
ACCESS ROAD
PL
ACCESS ROAD
EX. 2 MG ZONE A RESERVIOR
EX. 2 MG ZONE A RESERVIOR
PRODUCT WATER PUMP STATION
FLOW CONTROL FACILITY
TCWD PUMP STATION
ACCESS ROAD
25' SAC EASEMENT (SEE NOTE 1)
50' MWD EASEMENT (SEE NOTE 1)
25' SAC EASEMENT (SEE NOTE 1)
30' MWD EASEMENT (SEE NOTE 1)
CONST. MANAGEMENT
EX. STORAGE BUILDING
CHEMICAL BUILDING
CT BASIN
WATER TREATMENT PLANT
TREATMENT BUILDING
WISTERIA
MF PUMP STATION
FOREBAY
MFWWT

100 50 0 100 200 300
SCALE: 1"=100'

NOTES

1. SPECIAL CONSTRUCTION REQUIREMENTS APPLY WITH SAC AND MWD EASEMENTS. SEE SPECIFICATIONS.

DRAWING INDEX

FACILITY	ROUGH GRADING	PRECISE GRADING	HORIZONTAL CONTROL
WATER TREATMENT PLANT	C003	C009	C014
ACCESS ROAD	C004A-C004G	C010A-C010G	C015A-C015G
FLOW CONTROL FACILITY	C005	C011	C016
TCWD PUMP STATION	C005	C012	C016
PRODUCT WATER PUMP STATION	C007	C013	C017
STOCKPILE PLAN	C008	--	--

FILENAME: 6232A-C002.dwg
LAST UPDATED: 01/17/2012 02:54 PM
LAST SAVED BY: scook

No.	DATE	REVISIONS	APPROVED

DESIGNED: CBH
DRAWN: DDT
CHECKED: CLM

RBF CONSULTING
carollo
IRVINE RANCH WATER DISTRICT

COREY HESS	RCE NO. 68499	PROJECT ENGINEER	DATE
CINDY MILLER	RCE NO. 58116	PROJECT MANAGER	DATE
PATRICIA UEMATSU	RCE NO. 36762	PRINCIPAL ENGINEER	DATE

IRVINE RANCH WATER DISTRICT
BAKER WATER TREATMENT PLANT
PROJECT NO. 11218

CIVIL KEY MAP

DRAWING
C002
SHEET
30 OF 632

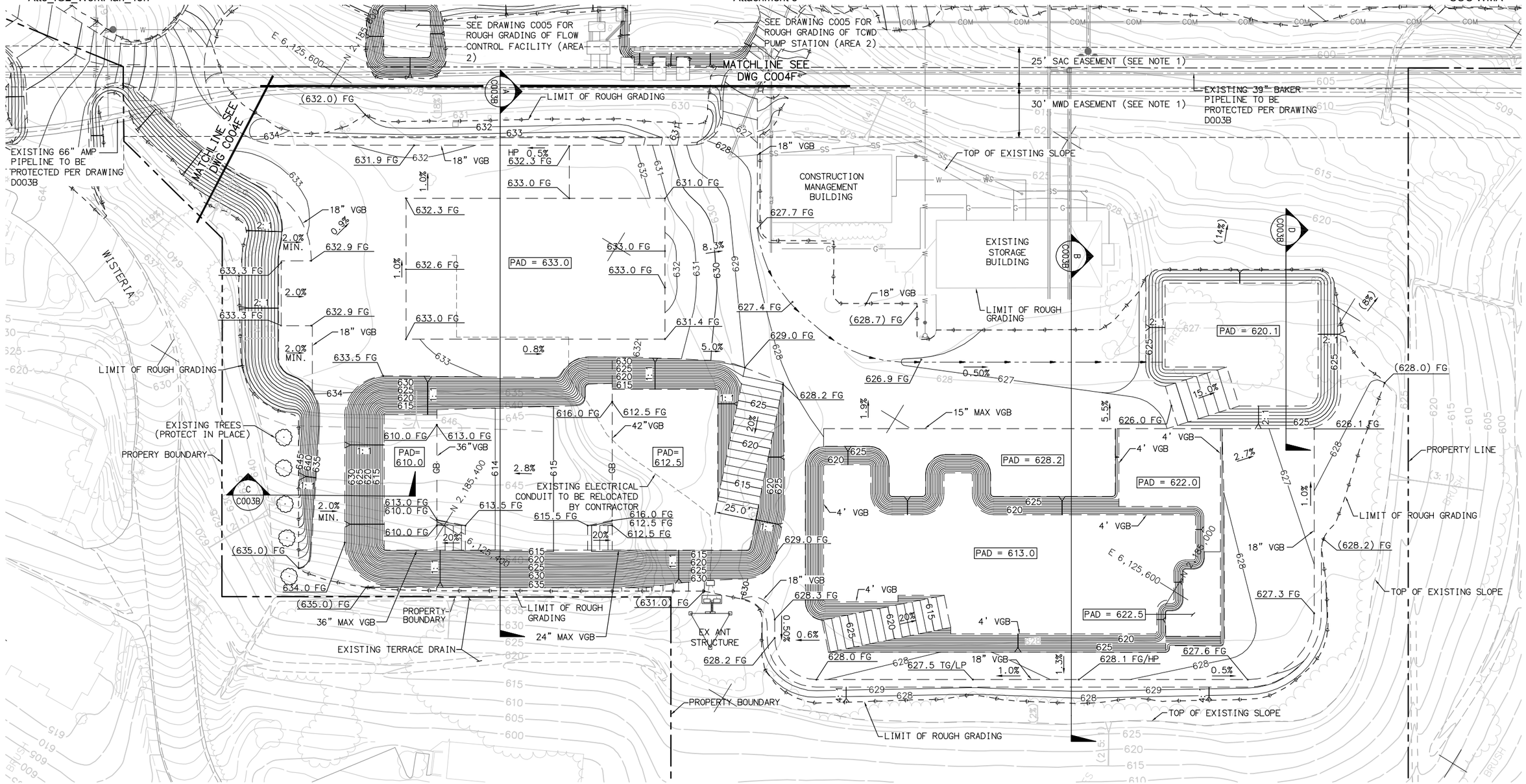

NOTES

1. SPECIAL CONSTRUCTION REQUIREMENTS APPLY WITH SAC AND MWD EASEMENTS. SEE SPECIFICATIONS.

No.	DATE	REVISIONS	APPROVED

DESIGNED: JTO
DRAWN: SMC
CHECKED: JTO

RBF CONSULTING

carollo

IRVINE RANCH WATER DISTRICT

STEVEN M. COOK	RCE NO. 76947	PROJECT ENGINEER	DATE
CINDY MILLER	RCE NO. 58116	PROJECT MANAGER	DATE
PATRICIA UEMATSU	RCE NO. 36762	PRINCIPAL ENGINEER	DATE

IRVINE RANCH WATER DISTRICT
BAKER WATER TREATMENT PLANT
PROJECT NO. 11218

ROUGH GRADING PLAN
WATER TREATMENT PLANT
AREA 1

DRAWING
C003A
SHEET
31 OF **632**

FILENAME: 6232A-C003A.dwg
LAST UPDATED: 01/18/2012 01:47 PM
LAST SAVED BY: scook

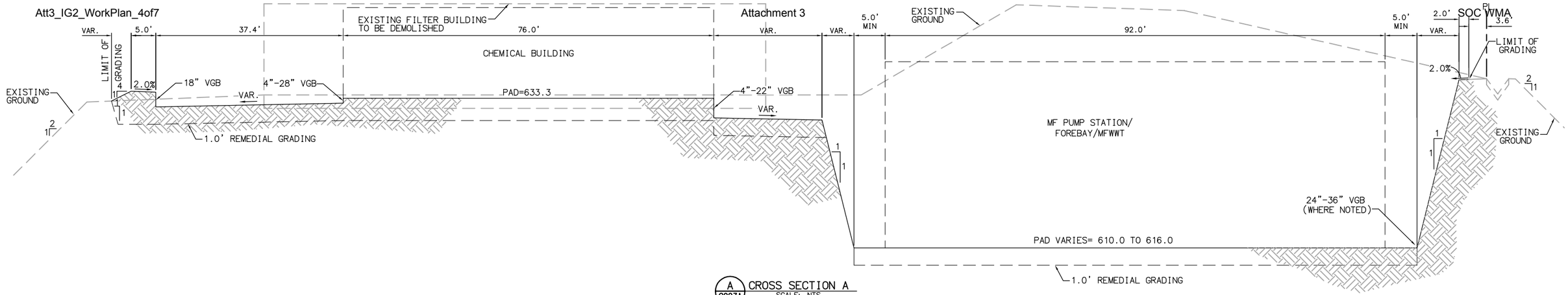

A C003A CROSS SECTION A
SCALE: NTS

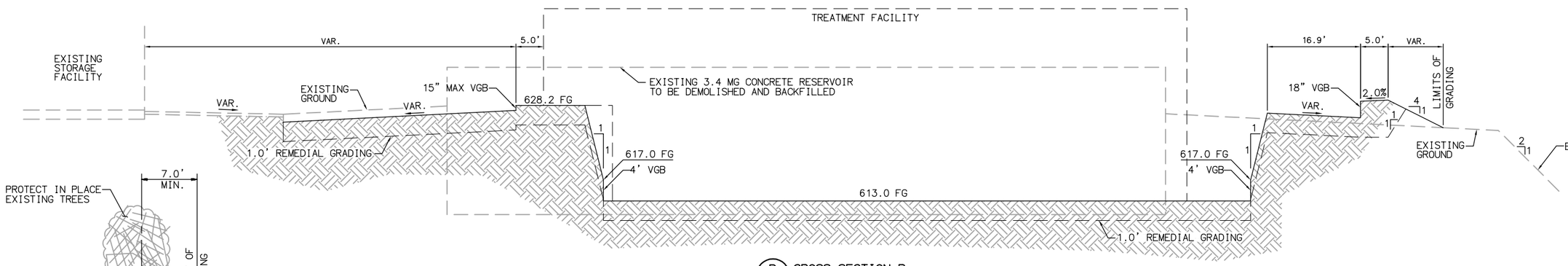

B C003A CROSS SECTION B
SCALE: NTS

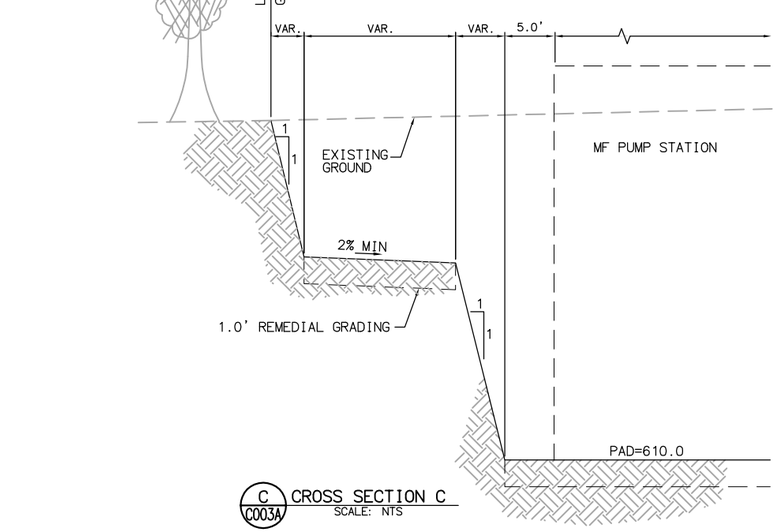

C C003A CROSS SECTION C
SCALE: NTS

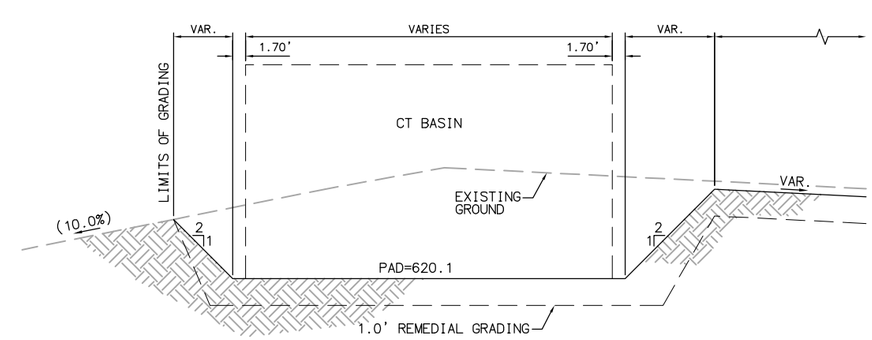

D C003A CROSS SECTION D
SCALE: NTS

FILENAME: 6232A-C003B.dwg
LAST UPDATED: 01/18/2012 01:47 PM
LAST SAVED BY: scook

No.	DATE	REVISIONS	APPROVED

DESIGNED: SMC
DRAWN: SMC
CHECKED: JTO

RBF CONSULTING

carollo

IRVINE RANCH WATER DISTRICT

STEVEN M. COOK	RCE NO. 76947	PROJECT ENGINEER	DATE
CINDY MILLER	RCE NO. 58116	PROJECT MANAGER	DATE
PATRICIA UEMATSU	RCE NO. 36762	PRINCIPAL ENGINEER	DATE

IRVINE RANCH WATER DISTRICT
BAKER WATER TREATMENT PLANT
PROJECT NO. 11218

ROUGH GRADING PLAN
CROSS SECTIONS
AREA 1

DRAWING
C003B
SHEET
32 OF 632

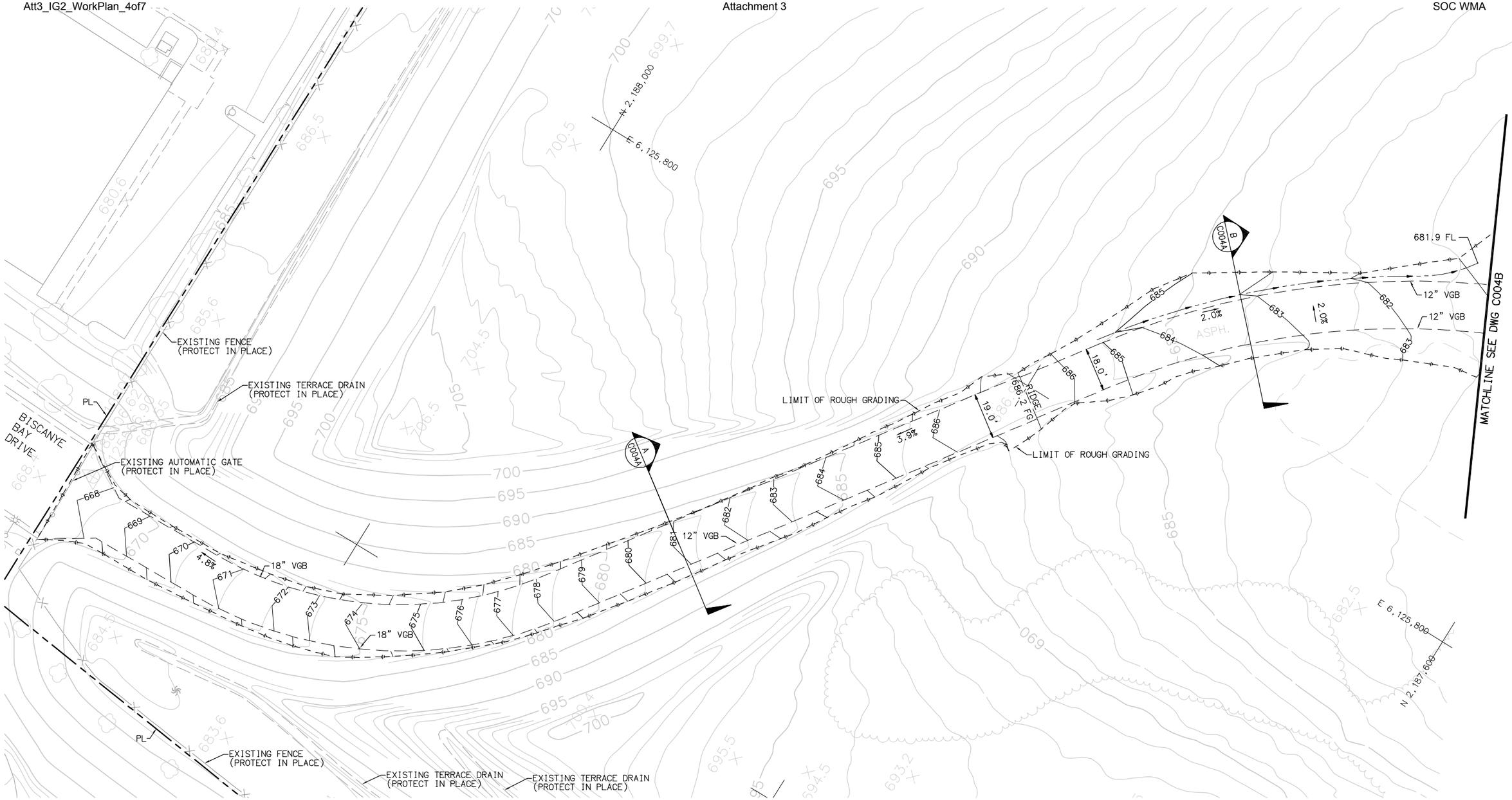

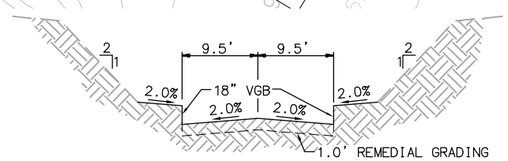

A C004A CROSS SECTION A
SCALE: NTS

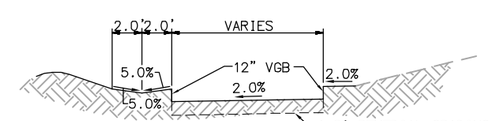

B C004A CROSS SECTION B
SCALE: NTS

SCALE: 1"=20'

SCALE: 1"=20'

No.	DATE	REVISIONS	APPROVED

DESIGNED: JTO
DRAWN: SMC
CHECKED: JTO

RBF CONSULTING

carollo

IRVINE RANCH WATER DISTRICT

STEVEN M. COOK	RCE NO. 76947	PROJECT ENGINEER	DATE
CINDY MILLER	RCE NO. 58116	PROJECT MANAGER	DATE
PATRICIA UEMATSU	RCE NO. 36762	PRINCIPAL ENGINEER	DATE

IRVINE RANCH WATER DISTRICT
BAKER WATER TREATMENT PLANT
PROJECT NO. 11218

ROUGH GRADING PLAN
ACCESS ROAD
AREA 2

DRAWING
C004A
SHEET
33 OF 632

LAST SAVED BY: scook LAST UPDATED: 01/17/2012 03:49 PM FILENAME: 6232A-C004A.dwg

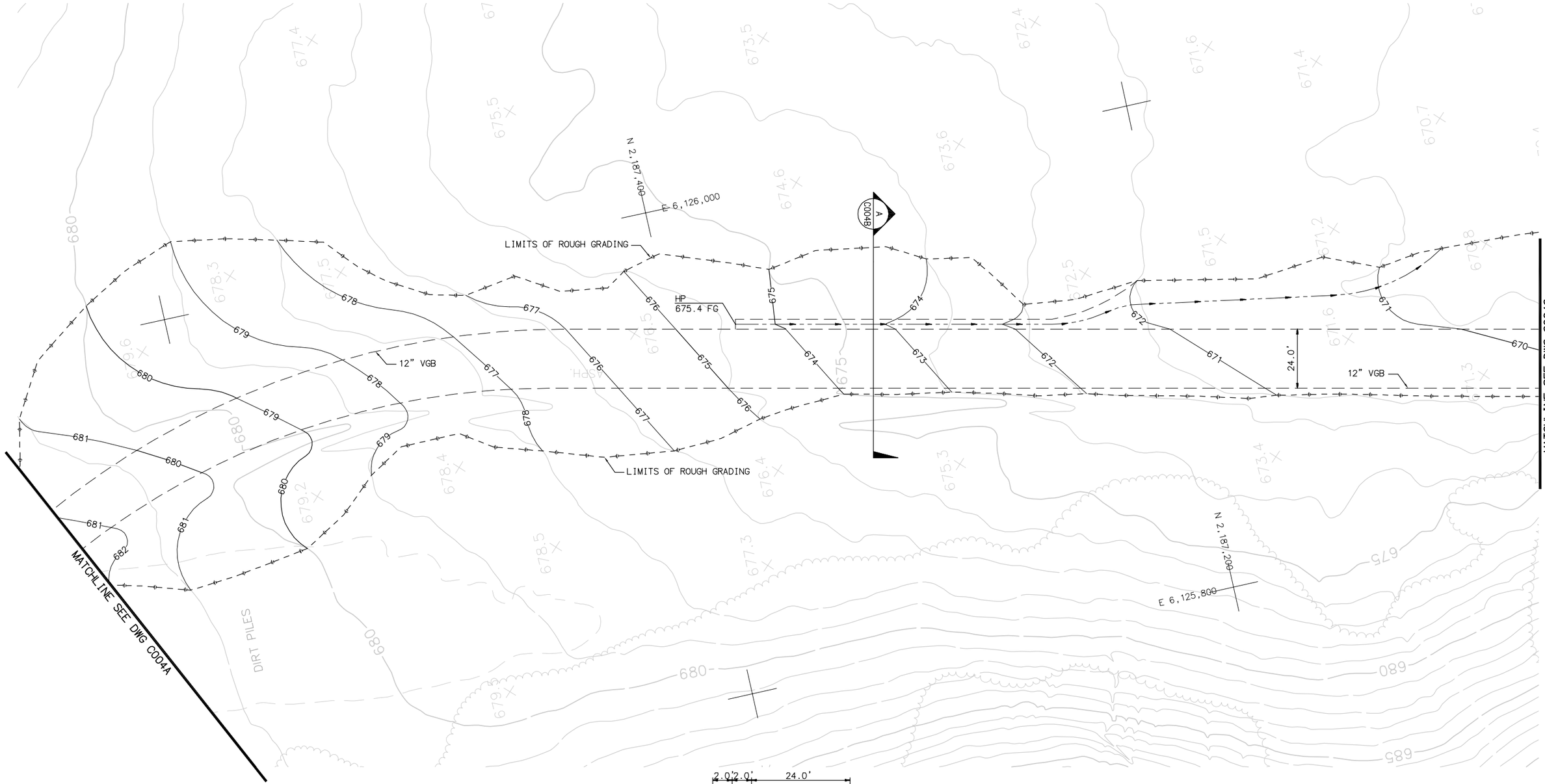

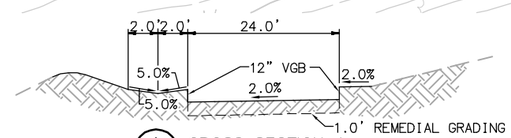

A C004B CROSS SECTION A
SCALE: NTS

LAST SAVED BY: scook LAST UPDATED: 12/08/2011 11:44 AM FILENAME: 6232A-C004B.dwg

No.	DATE	REVISIONS	APPROVED

DESIGNED: JTO
DRAWN: SMC
CHECKED: JTO

RBF CONSULTING

carollo

IRVINE RANCH WATER DISTRICT

STEVEN M. COOK	RCE NO. 76947	PROJECT ENGINEER	DATE
CINDY MILLER	RCE NO. 58116	PROJECT MANAGER	DATE
PATRICIA UEMATSU	RCE NO. 36762	PRINCIPAL ENGINEER	DATE

IRVINE RANCH WATER DISTRICT
BAKER WATER TREATMENT PLANT
PROJECT NO. 11218

ROUGH GRADING PLAN
ACCESS ROAD
AREA 2

DRAWING
C004B
SHEET
34 OF **632**

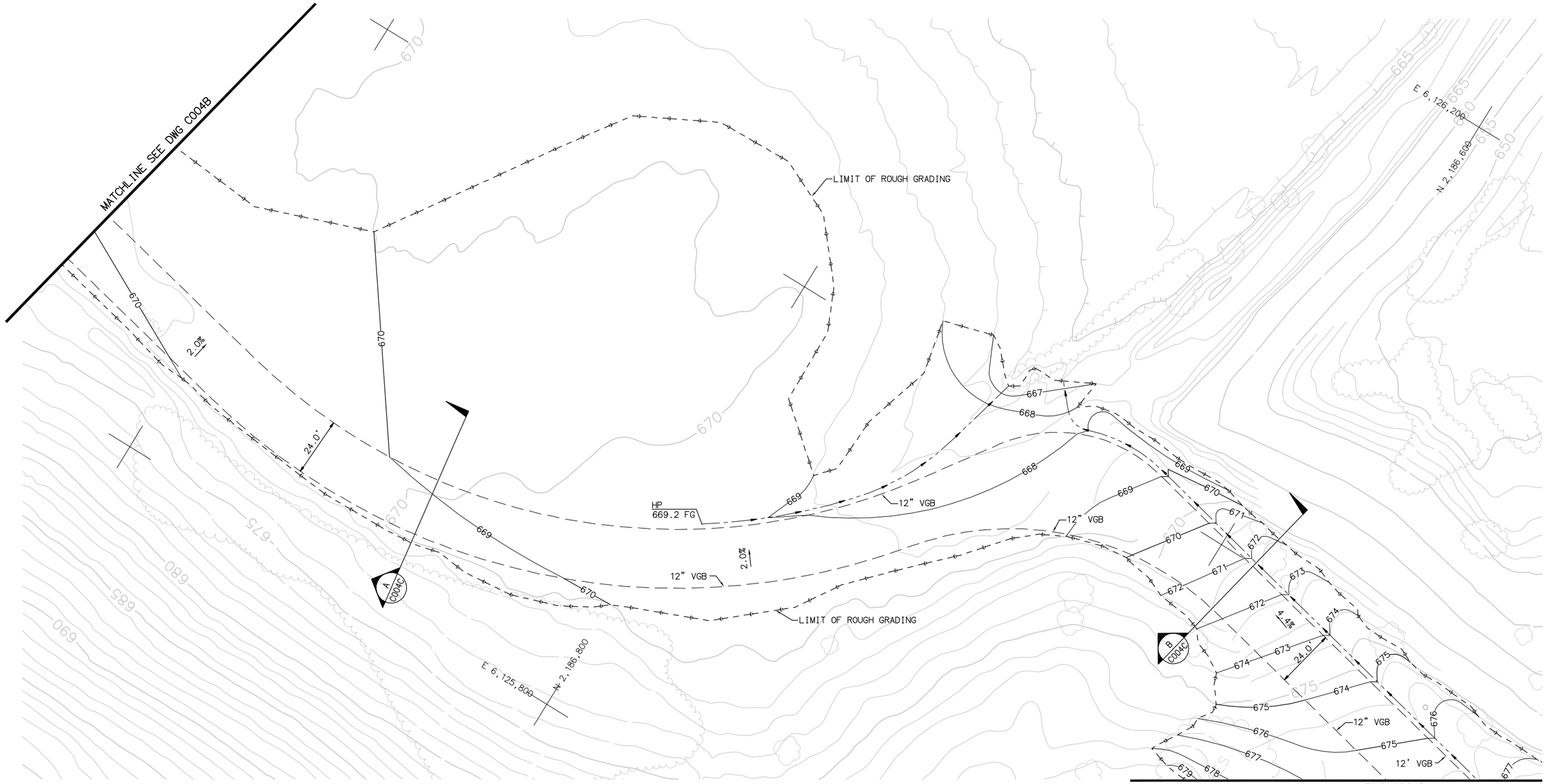

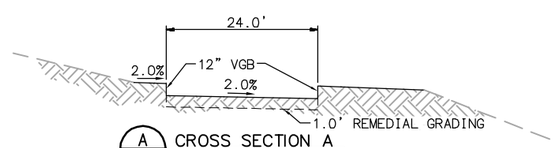

A C004C CROSS SECTION A
SCALE: NTS

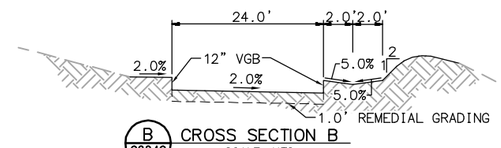

B C004C CROSS SECTION B
SCALE: NTS

20 10 0 20 40 60
SCALE: 1"=20'

FILENAME: 6232A-C004C.dwg
LAST UPDATED: 01/17/2012 03:58 PM
LAST SAVED BY: scook

No.	DATE	REVISIONS	APPROVED

DESIGNED: JTO
DRAWN: SMC
CHECKED: JTO

RBF CONSULTING
carollo
IRVINE RANCH WATER DISTRICT

STEVEN M. COOK	RCE NO. 76947	PROJECT ENGINEER	DATE
CINDY MILLER	RCE NO. 58116	PROJECT MANAGER	DATE
PATRICIA UEMATSU	RCE NO. 36762	PRINCIPAL ENGINEER	DATE

IRVINE RANCH WATER DISTRICT
BAKER WATER TREATMENT PLANT
PROJECT NO. 11218

ROUGH GRADING PLAN
ACCESS ROAD
AREA 2

DRAWING
C004C
SHEET
35 OF 632

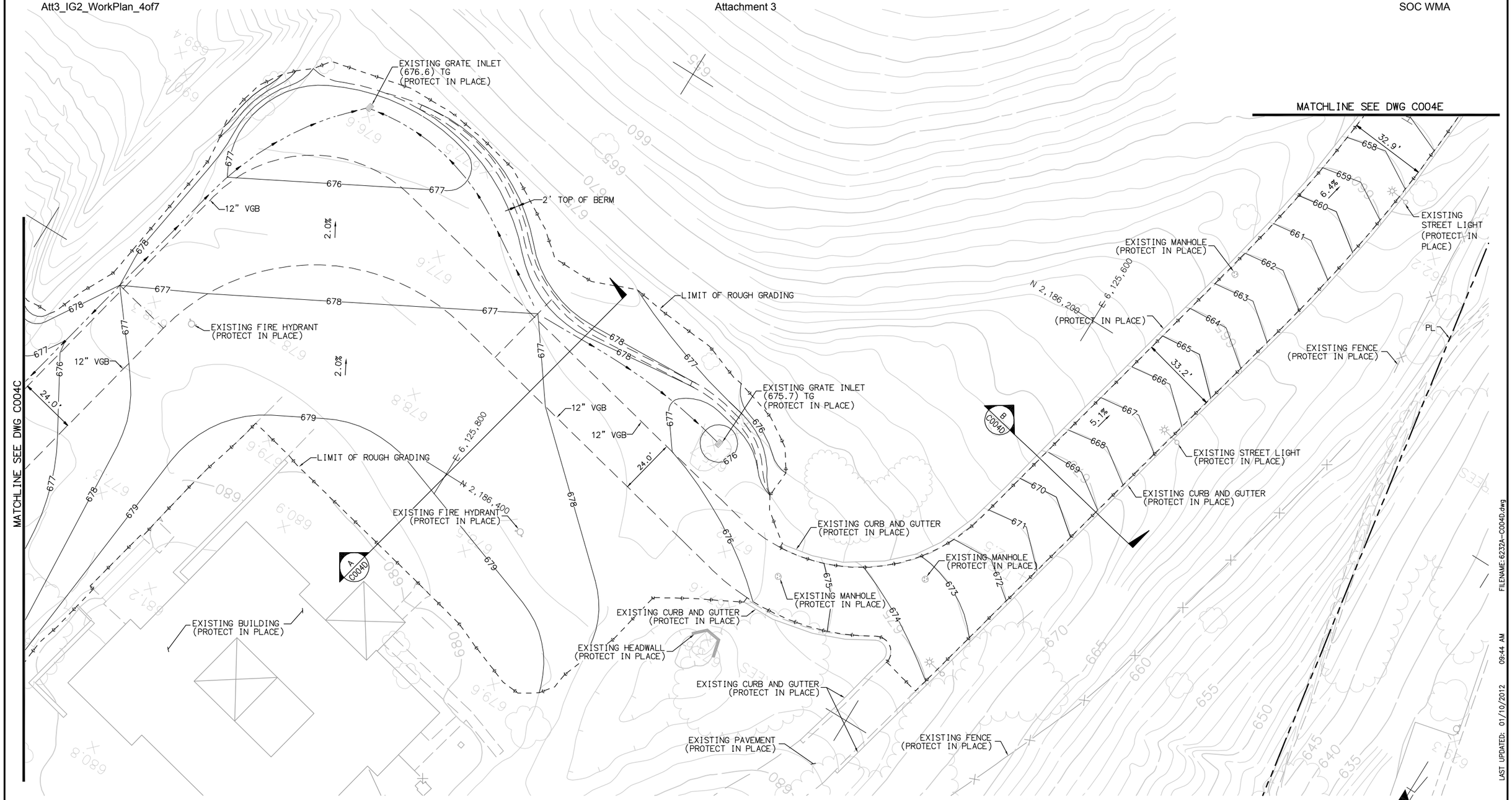

No.	DATE	REVISIONS	APPROVED

DESIGNED: JTO
DRAWN: SMC
CHECKED: JTO

RBF CONSULTING

carollo

IRVINE RANCH WATER DISTRICT

STEVEN M. COOK	RCE NO. 76947	PROJECT ENGINEER	DATE
CINDY MILLER	RCE NO. 58116	PROJECT MANAGER	DATE
PATRICIA UEMATSU	RCE NO. 36762	PRINCIPAL ENGINEER	DATE

IRVINE RANCH WATER DISTRICT
BAKER WATER TREATMENT PLANT
PROJECT NO. 11218

ROUGH GRADING PLAN
ACCESS ROAD
AREA 2

DRAWING
C004D
SHEET
36 OF **632**

FILENAME: 6232A-C004D.dwg
LAST UPDATED: 01/10/2012 09:44 AM
LAST SAVED BY: mkallenbough

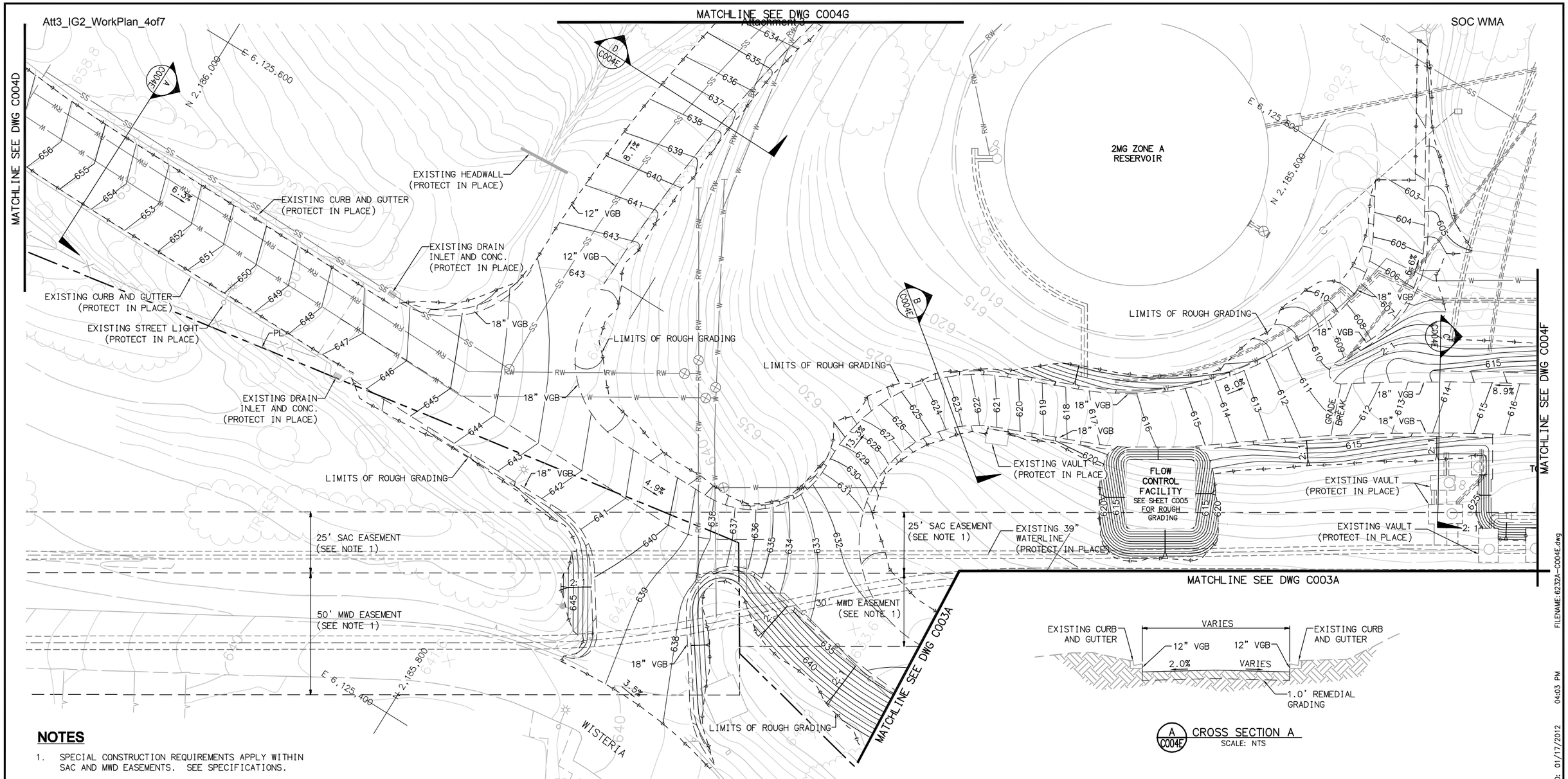

NOTES

1. SPECIAL CONSTRUCTION REQUIREMENTS APPLY WITHIN SAC AND MWD EASEMENTS. SEE SPECIFICATIONS.

A C004E CROSS SECTION A
SCALE: NTS

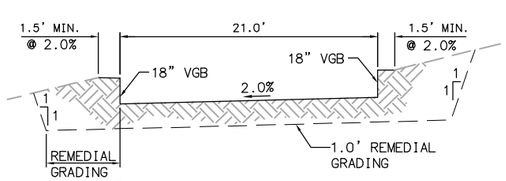

B C004E CROSS SECTION B
SCALE: NTS

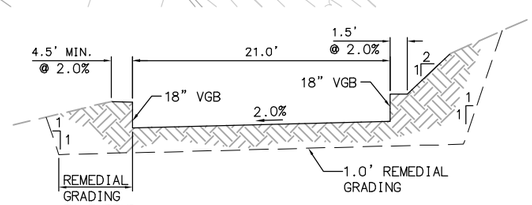

C C004E CROSS SECTION C
SCALE: NTS

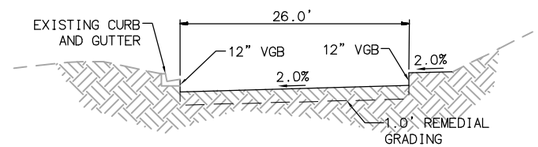

D C004E CROSS SECTION D
SCALE: NTS

SCALE: 1"=20'

20 10 0 20 40 60
SCALE: 1"=20'

FILENAME: 6232A-C004E.dwg
LAST UPDATED: 01/17/2012 04:03 PM
LAST SAVED BY: scook

No.	DATE	REVISIONS	APPROVED

DESIGNED: JTO
DRAWN: SMC
CHECKED: JTO

RBF CONSULTING
carollo
IRVINE RANCH WATER DISTRICT

STEVEN M. COOK	RCE NO. 76947	PROJECT ENGINEER	DATE
CINDY MILLER	RCE NO. 58116	PROJECT MANAGER	DATE
PATRICIA UEMATSU	RCE NO. 36762	PRINCIPAL ENGINEER	DATE

IRVINE RANCH WATER DISTRICT
BAKER WATER TREATMENT PLANT
PROJECT NO. 11218

ROUGH GRADING PLAN
ACCESS ROAD
AREA 2

DRAWING
C004E
SHEET
37 OF **632**

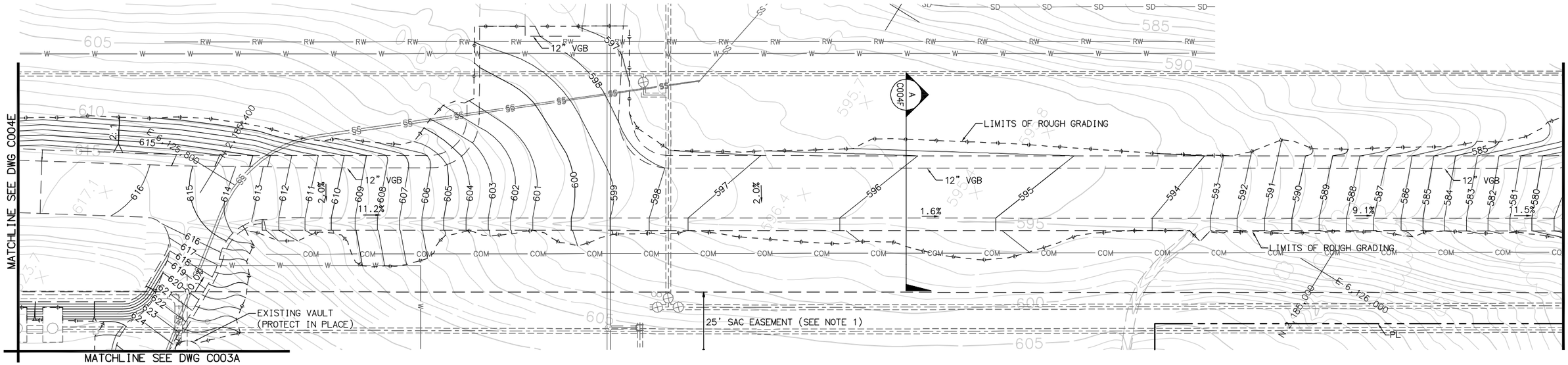

NOTES

1. SPECIAL CONSTRUCTION REQUIREMENTS APPLY WITHIN SAC AND MWD EASEMENTS. SEE SPECIFICATIONS.

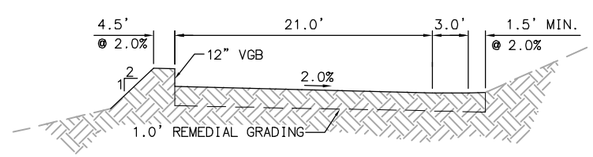

A C004F CROSS SECTION A
SCALE: NTS

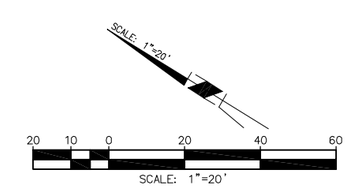

FILENAME: 6232A-C004F.dwg LAST UPDATED: 01/10/2012 09:53 AM LAST SAVED BY: mkallenbough

No.	DATE	REVISIONS	APPROVED

DESIGNED: JTO
DRAWN: SMC
CHECKED: JTO

RBF CONSULTING

carollo

IRVINE RANCH WATER DISTRICT

STEVEN M. COOK	RCE NO. 76947	PROJECT ENGINEER	DATE
CINDY MILLER	RCE NO. 58116	PROJECT MANAGER	DATE
PATRICIA UEMATSU	RCE NO. 36762	PRINCIPAL ENGINEER	DATE

IRVINE RANCH WATER DISTRICT
BAKER WATER TREATMENT PLANT
PROJECT NO. 11218

ROUGH GRADING PLAN
ACCESS ROAD
AREA 2

DRAWING C004F
SHEET 38 OF 632

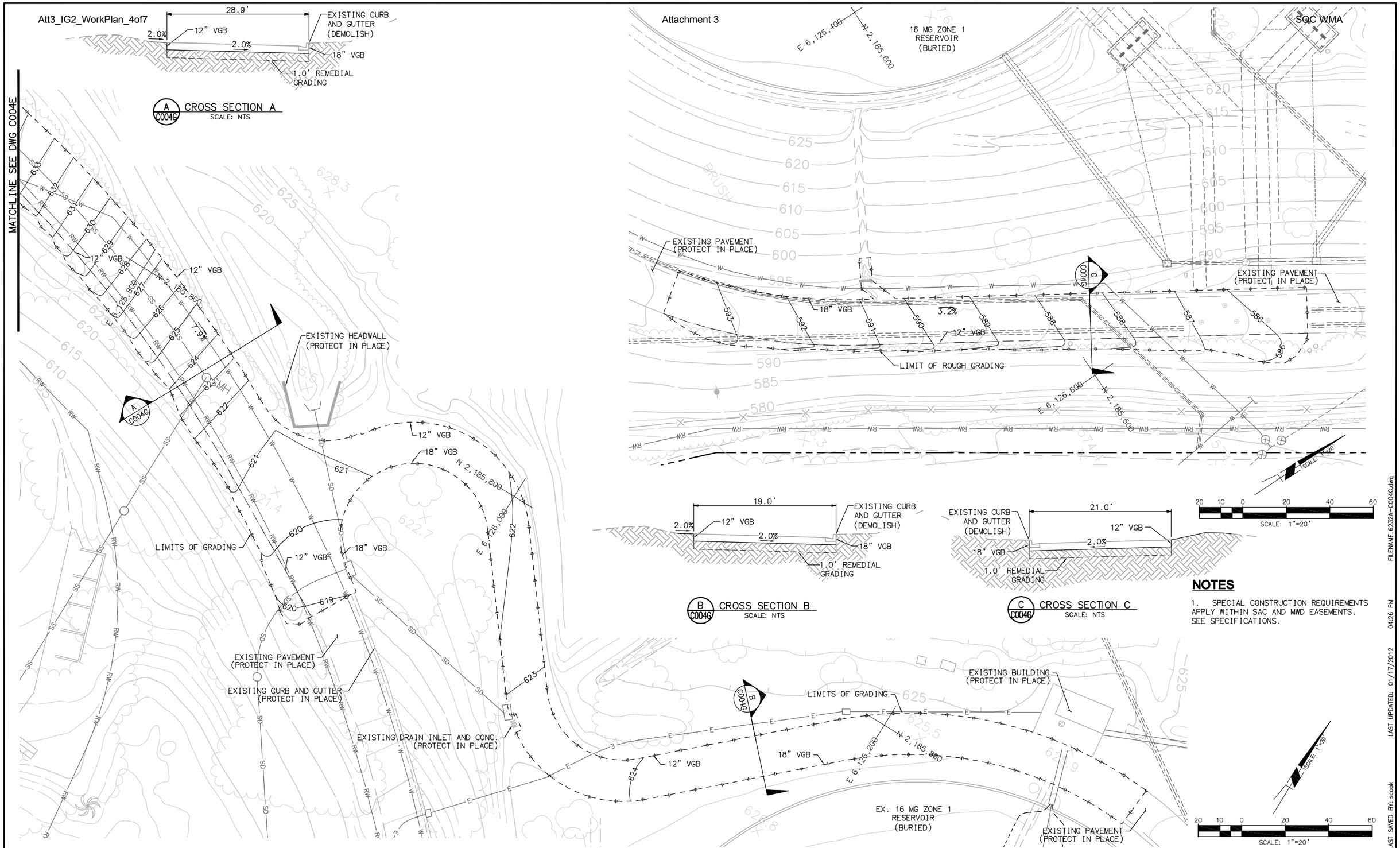

NOTES

1. SPECIAL CONSTRUCTION REQUIREMENTS APPLY WITHIN SAC AND MWD EASEMENTS. SEE SPECIFICATIONS.

FILENAME: 6232A-C004G.dwg
LAST UPDATED: 01/17/2012 04:26 PM
LAST SAVED BY: scook

No.	DATE	REVISIONS	APPROVED

DESIGNED: JTO
DRAWN: SMC
CHECKED: JTO

RBF CONSULTING

carollo

IRVINE RANCH WATER DISTRICT

STEVEN M. COOK	RCE NO. 76947	PROJECT ENGINEER	DATE
CINDY MILLER	RCE NO. 58116	PROJECT MANAGER	DATE
PATRICIA UEMATSU	RCE NO. 36762	PRINCIPAL ENGINEER	DATE

IRVINE RANCH WATER DISTRICT
BAKER WATER TREATMENT PLANT
PROJECT NO. 11218

ROUGH GRADING PLAN
ACCESS ROAD
AREA 2

DRAWING
C004G
SHEET
39 OF 632

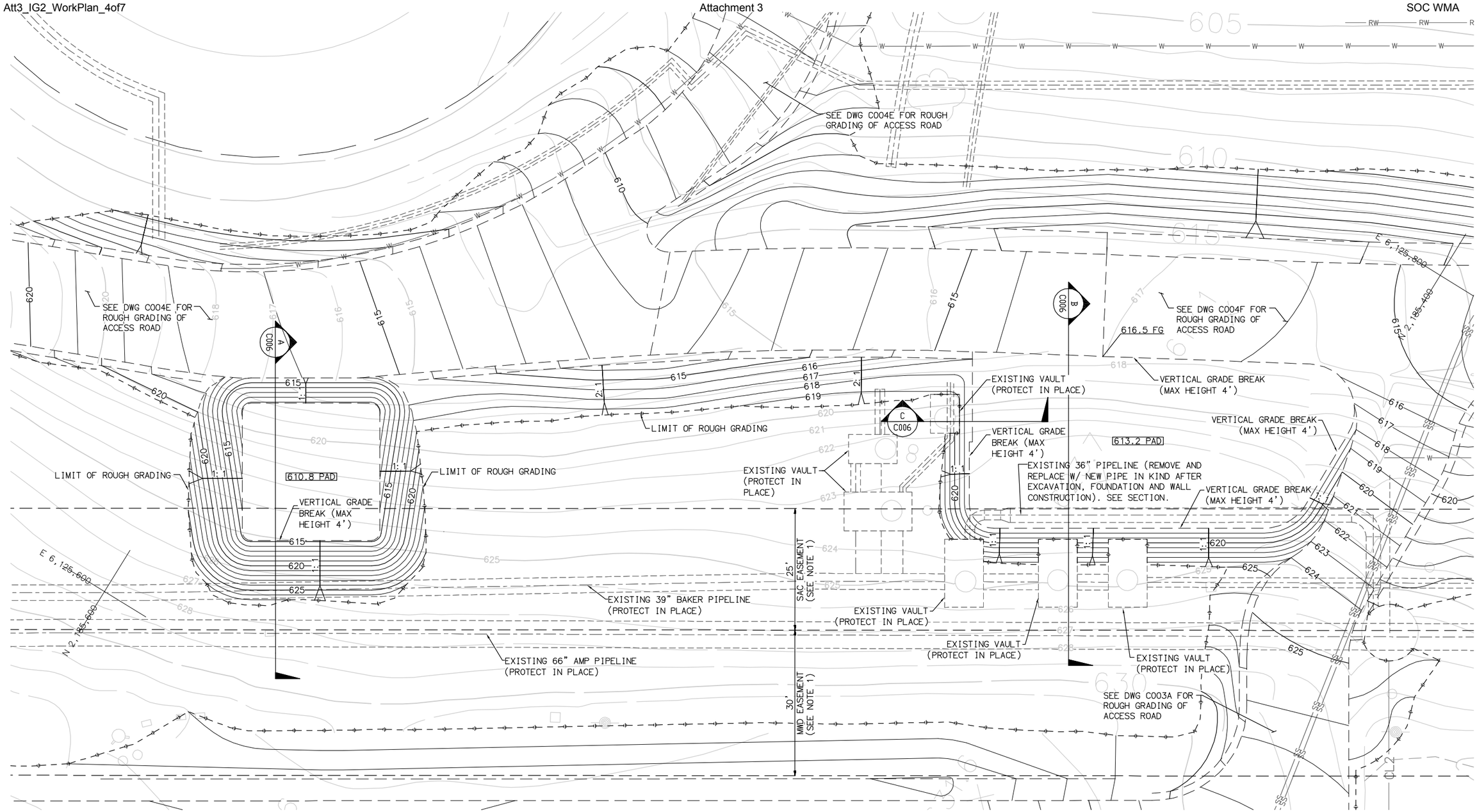

NOTES

1. SPECIAL CONSTRUCTION REQUIREMENTS APPLY WITHIN SAC AND MWD EASEMENTS. SEE SPECIFICATIONS.
2. CONTRACTOR SHALL DETERMINE EXACT LOCATION OF ALL PIPELINES PRIOR TO CONSTRUCTION.

No.	DATE	REVISIONS	APPROVED

DESIGNED: SMC
DRAWN: SMC
CHECKED: JTO

RBF CONSULTING

carollo

IRVINE RANCH WATER DISTRICT

STEVEN M. COOK	RCE NO. 76947	PROJECT ENGINEER	DATE
CINDY MILLER	RCE NO. 58116	PROJECT MANAGER	DATE
PATRICIA UEMATSU	RCE NO. 36762	PRINCIPAL ENGINEER	DATE

IRVINE RANCH WATER DISTRICT
BAKER WATER TREATMENT PLANT
PROJECT NO. 11218

ROUGH GRADING PLAN
FLOW CONTROL FACILITY & TCWD PUMP STATION - AREA 2

DRAWING
C005
SHEET
40 OF **632**

FILENAME: 6232A-C005.dwg
LAST UPDATED: 01/31/2012 01:28 PM
LAST SAVED BY: chess

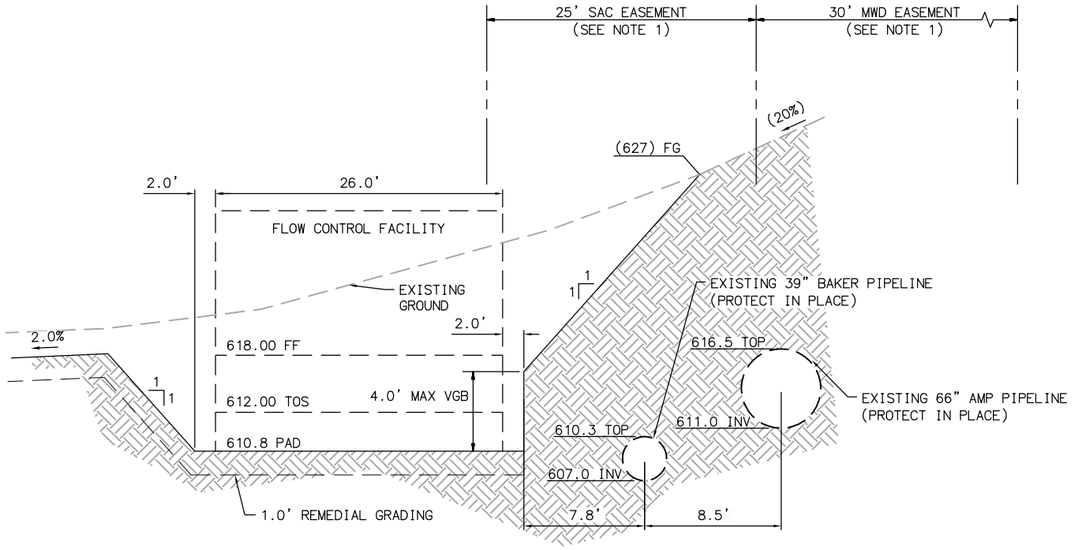

A C006 CROSS SECTION A
SCALE: NTS

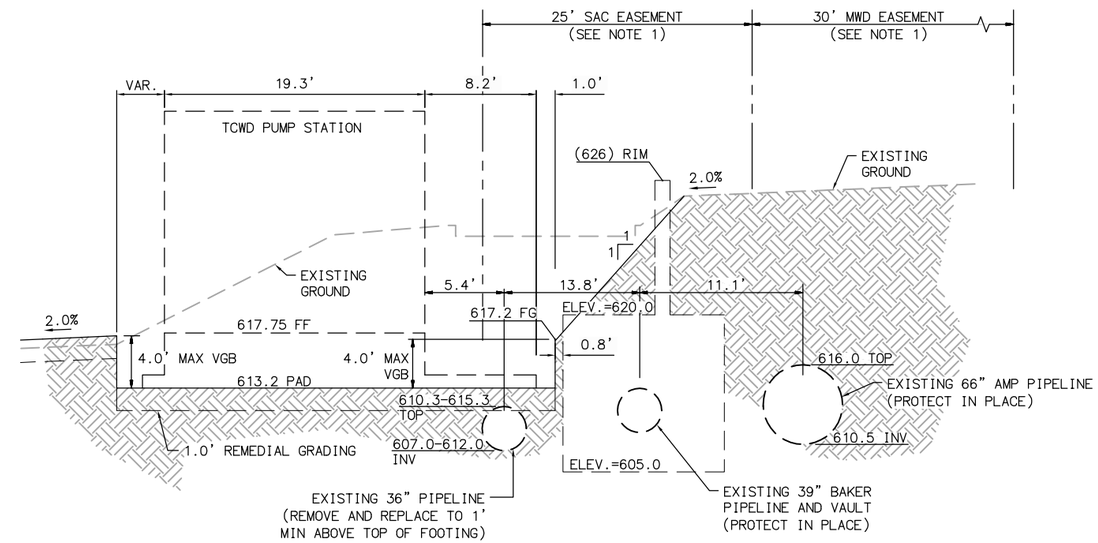

B C006 CROSS SECTION B
SCALE: NTS

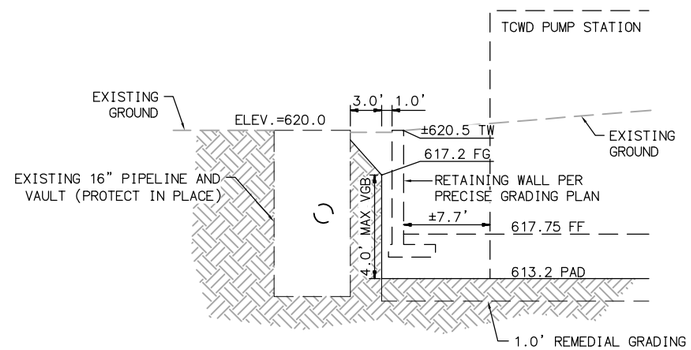

C C006 CROSS SECTION C
SCALE: NTS

NOTES

1. SPECIAL CONSTRUCTION REQUIREMENTS APPLY WITHIN SAC AND MWD EASEMENTS. SEE SPECIFICATIONS.
2. CONTRACTOR SHALL DETERMINE EXACT LOCATION OF ALL PIPELINES PRIOR TO CONSTRUCTION.

No.	DATE	REVISIONS	APPROVED

DESIGNED: SMC
DRAWN: SMC
CHECKED: JTO

RBF CONSULTING
carollo
IRVINE RANCH WATER DISTRICT

STEVEN M. COOK	RCE NO. 76947	PROJECT ENGINEER	DATE
CINDY MILLER	RCE NO. 58116	PROJECT MANAGER	DATE
PATRICIA UEMATSU	RCE NO. 36762	PRINCIPAL ENGINEER	DATE

IRVINE RANCH WATER DISTRICT
BAKER WATER TREATMENT PLANT
PROJECT NO. 11218

ROUGH GRADING PLAN
TCWD PUMP STATION
AREA 2

DRAWING C006
SHEET 41 OF 632

LAST SAVED BY: ewalker LAST UPDATED: 01/23/2012 03:07 PM FILENAME: 6232A-C006.dwg

BISCAYNE BAY DRIVE

PL

EXISTING ACCESS ROAD

2.0% MIN.
GRADE TO DRAIN

STOCKPILE AREA
(2' HIGH)

2.0% MIN.
GRADE TO DRAIN

LIMITS OF STOCKPILE

SILT FENCE TO BE INSTALLED
PER DETAIL HEREON

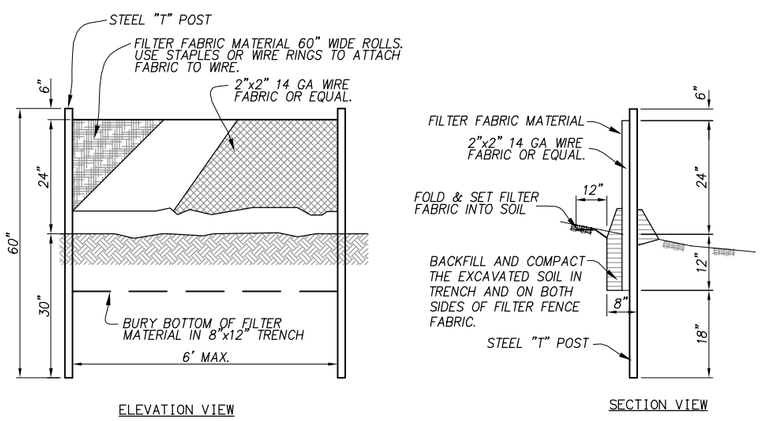

SILT FENCE DETAIL
SCALE: NOT TO SCALE

SCALE: 1"=60'

60 30 0 60 120 180
SCALE: 1"=60'

FILENAME: 6232A-C008.dwg
LAST UPDATED: 01/10/2012 10:45 AM
LAST SAVED BY: mkallenbaugh

No.	DATE	REVISIONS	APPROVED

DESIGNED: JTO
DRAWN: SMC
CHECKED: JTO

RBF CONSULTING

carollo

IRVINE RANCH WATER DISTRICT

STEVEN M. COOK	RCE NO. 76947	PROJECT ENGINEER	DATE
CINDY MILLER	RCE NO. 58116	PROJECT MANAGER	DATE
PATRICIA UEMATSU	RCE NO. 36762	PRINCIPAL ENGINEER	DATE

IRVINE RANCH WATER DISTRICT
BAKER WATER TREATMENT PLANT
PROJECT NO. 11218

STOCKPILE PLAN

DRAWING
C008

SHEET
43 OF 632

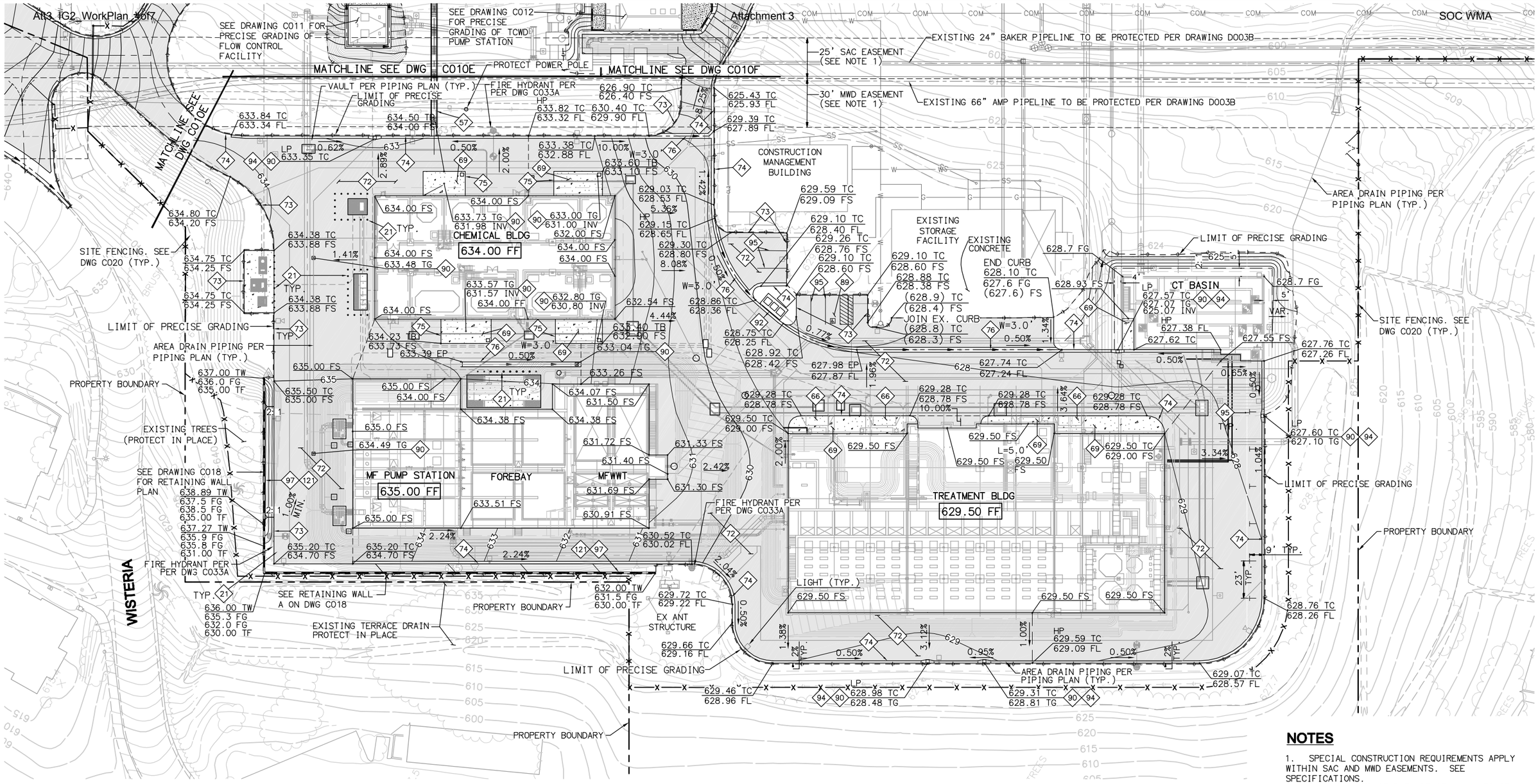

NOTES

1. SPECIAL CONSTRUCTION REQUIREMENTS APPLY WITHIN SAC AND MWD EASEMENTS. SEE SPECIFICATIONS.
2. PAVING CONTRACTOR TO REVIEW ALL UTILITY PLANS TO VERIFY RIM AND FINISH SURFACE ELEVATION.

KEY NOTES

- 21 INSTALL REMOVEABLE GAURD POST PER IRWD STD. DWG. G-1
- 57 CONSTRUCT REINFORCED CONCRETE STAIRWAY PER SPPWC STD. PLAN 640-3 (W=3.0', T=12", R=6", C=6", L AND S PER PLAN.
- 66 CONCRETE RAMP PER DETAIL 3 ON DWG C021
- 69 CONCRETE FLATWORK PER DETAIL 2 ON DWG C022
- 72 ASPHALT PAVING PER DETAIL 1 ON DWG C021
- 73 CONSTRUCT CONCRETE CURB PER OC RDMD STD PLAN 120-1, TYPE A1-150(6)
- 74 CONSTRUCT CONCRETE CURB AND GUTTER PER OC RDMD STD PLAN 120-1, MODIFIED TYPE A2-150(6), W=18"
- 75 CONSTRUCT MOUNTABLE ASPHALT CURB PER SPPWC STD PLAN 121-2, TYPE D2-6(150), 6" CF
- 76 CONSTRUCT LONGITUDINAL GUTTER PER OC RDMD STD PLAN 122-1, MODIFIED W PER PLAN.
- 89 CONSTRUCT VAN ACCESSIBLE PARKING STALL AND SIGNAGE PER DETAIL 8 ON DWG C021
- 90 INTALL 24"X24" JENSEN STORM DRAIN INLET
- 92 INSTALL 16'X18' PRECAST FILTERRA UNIT, ROOF DRAIN CONFIGURATION (WITH 10" PVC PIPED IN) OR APPROVED EQUAL. TOP OF SLAB ELEVATION = 628.81, 627.14 INV-IN, 624.31 INV-OUT, AND LOCAL DEPRESSION PER DETAIL 5 ON SHEET C022.
- 94 CONSTRUCT GUTTER TRANSITION PER DETAIL 6 ON SHEET C022
- 95 PAINT 3" WIDE SOLID WHITE STRIPE
- 97 CONSTRUCT MASONRY RETAINING WALL PER STRUCUTURAL DRAWINGS S020 AND S021
- 121 INSTALL CABLE RAILING PER CALTRANS STD. PLAN B11-47

SCALE: 1"=30'

No.	DATE	REVISIONS	APPROVED

DESIGNED: JTO
DRAWN: SMC
CHECKED: JTO

RBF CONSULTING
carollo
IRVINE RANCH WATER DISTRICT

STEVEN M. COOK	RCE NO. 76947	PROJECT ENGINEER	DATE
CINDY MILLER	RCE NO. 58116	PROJECT MANAGER	DATE
PATRICIA UEMATSU	RCE NO. 36762	PRINCIPAL ENGINEER	DATE

IRVINE RANCH WATER DISTRICT
BAKER WATER TREATMENT PLANT
PROJECT NO. 11218

PRECISE GRADING PLAN
WATER TREATMENT PLANT
AREA 1

DRAWING
C009
SHEET
44 OF 632

LAST SAVED BY: scook LAST UPDATED: 01/18/2012 08:56 AM FILENAME: 6232A-C009.dwg

KEY NOTES

58 CONSTRUCT ASPHALT PAVEMENT JOIN PER DETAIL 1 ON DWG C022

72 ASPHALT PAVING PER DETAIL 1 ON DWG C021

74 CONSTRUCT CONCRETE CURB AND GUTTER PER OC RDMD STD PLAN 120-1, MODIFIED TYPE A2-150(6), W=18"

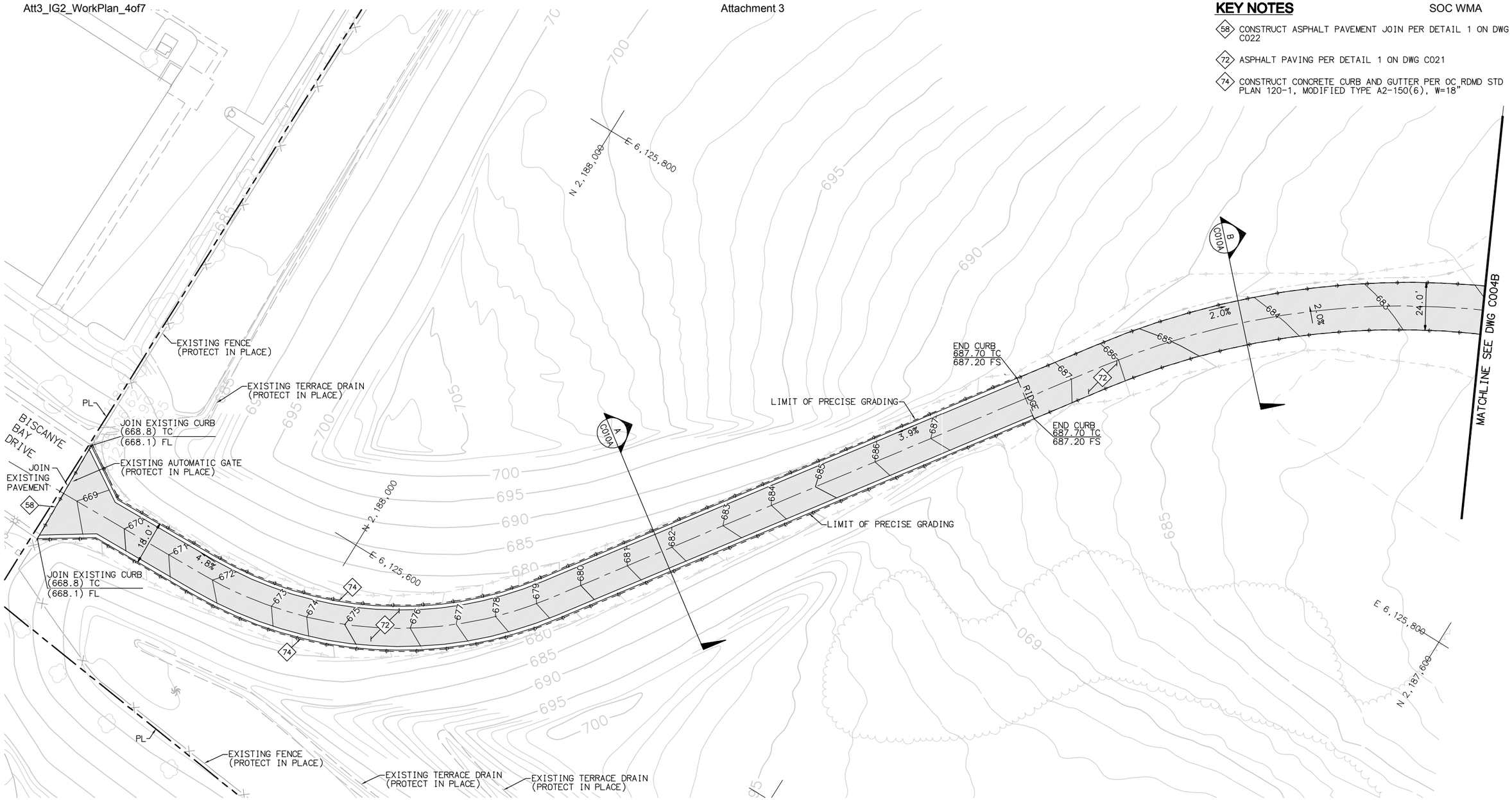

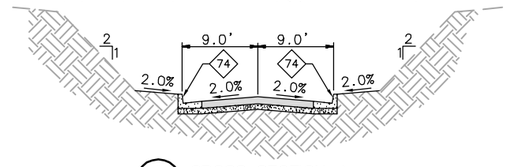

A C004A CROSS SECTION A
SCALE: NTS

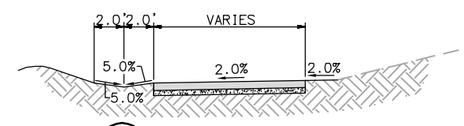

B C004A CROSS SECTION B
SCALE: NTS

SCALE: 1"=20'

20 10 0 20 40 60
SCALE: 1"=20'

LAST UPDATED: 01/18/2012 06:43 AM FILENAME: 6232A-C010A.dwg LAST SAVED BY: scook

No.	DATE	REVISIONS	APPROVED

DESIGNED: JTO
DRAWN: SMC
CHECKED: JTO

RBF CONSULTING

carollo

IRVINE RANCH WATER DISTRICT

STEVEN M. COOK	RCE NO. 76947	PROJECT ENGINEER	DATE
CINDY MILLER	RCE NO. 58116	PROJECT MANAGER	DATE
PATRICIA UEMATSU	RCE NO. 36762	PRINCIPAL ENGINEER	DATE

IRVINE RANCH WATER DISTRICT
BAKER WATER TREATMENT PLANT
PROJECT NO. 11218

PRECISE GRADING PLAN
ACCESS ROAD
AREA 2

DRAWING
C010A
SHEET
45 OF **632**

KEY NOTES

72 ASPHALT PAVING PER DETAIL 1 ON DWG C021

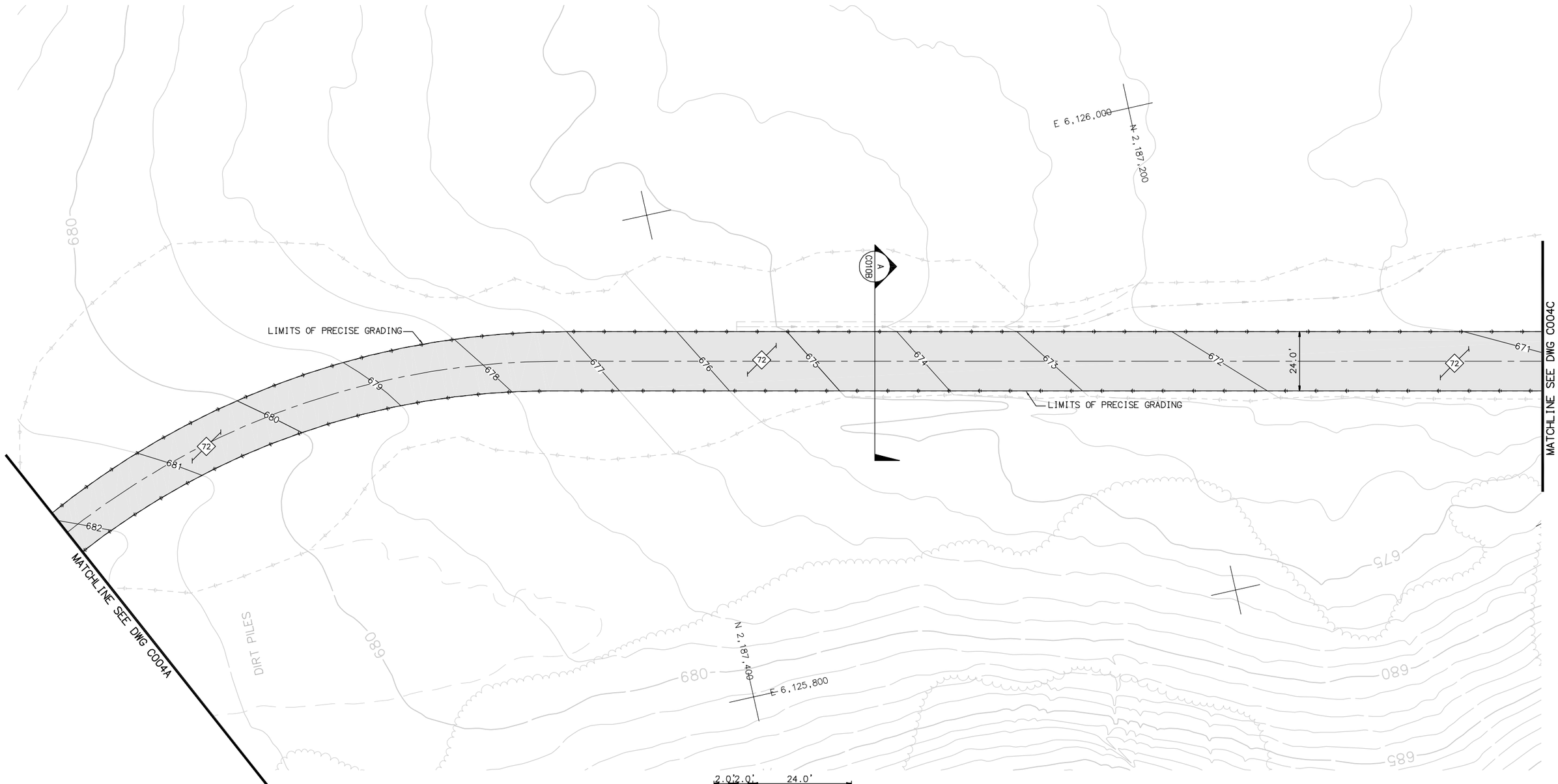

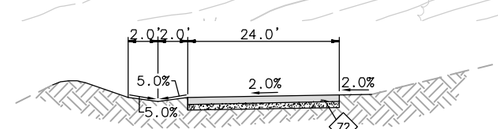

A C010B CROSS SECTION A
SCALE: NTS

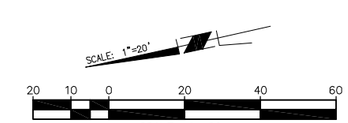

LAST SAVED BY: scook LAST UPDATED: 01/18/2012 06:45 AM FILENAME: 6232A-C010B.dwg

No.	DATE	REVISIONS	APPROVED

DESIGNED: JTO
DRAWN: SMC
CHECKED: JTO

RBF CONSULTING

carollo

IRVINE RANCH WATER DISTRICT

STEVEN M. COOK	RCE NO. 76947	PROJECT ENGINEER	DATE
CINDY MILLER	RCE NO. 58116	PROJECT MANAGER	DATE
PATRICIA UEMATSU	RCE NO. 36762	PRINCIPAL ENGINEER	DATE

IRVINE RANCH WATER DISTRICT
BAKER WATER TREATMENT PLANT
PROJECT NO. 11218

PRECISE GRADING PLAN
ACCESS ROAD
AREA 2

DRAWING
C010B
SHEET
46 OF **632**

KEY NOTES

72 ASPHALT PAVING PER DETAIL 1 ON DWG C021

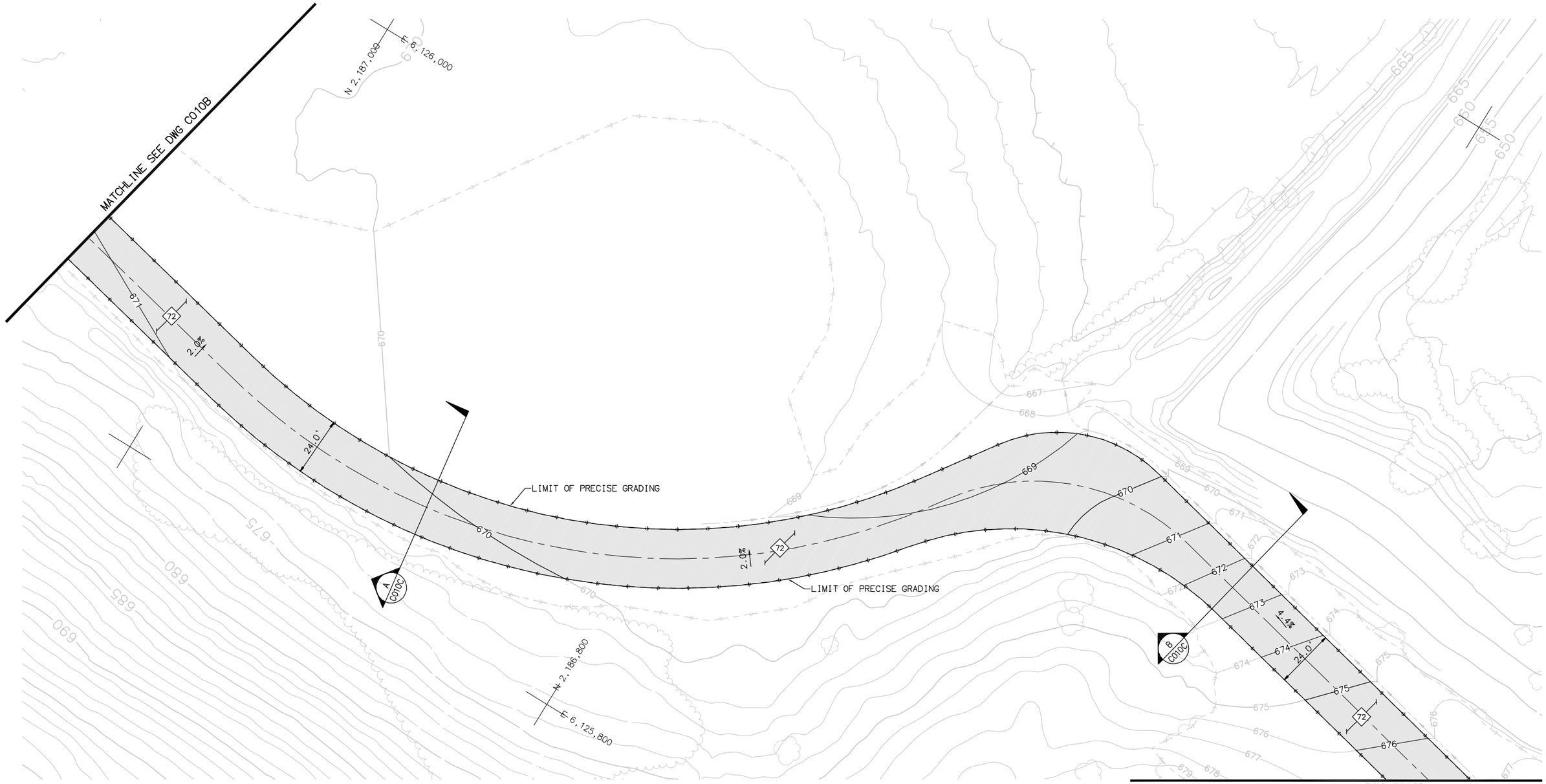

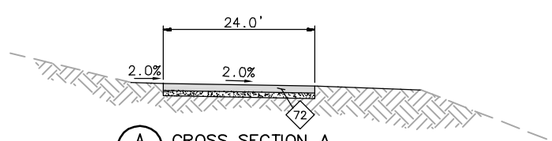

A C010C CROSS SECTION A
SCALE: NTS

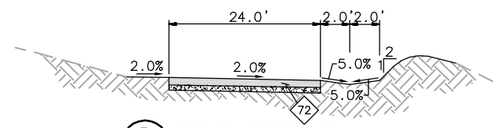

B C010C CROSS SECTION B
SCALE: NTS

SCALE: 1"=20'

No.	DATE	REVISIONS	APPROVED

DESIGNED: JTO
DRAWN: SMC
CHECKED: JTO

RBF CONSULTING

carollo

IRVINE RANCH WATER DISTRICT

STEVEN M. COOK	RCE NO. 76947	PROJECT ENGINEER	DATE
CINDY MILLER	RCE NO. 58116	PROJECT MANAGER	DATE
PATRICIA UEMATSU	RCE NO. 36762	PRINCIPAL ENGINEER	DATE

IRVINE RANCH WATER DISTRICT
BAKER WATER TREATMENT PLANT
PROJECT NO. 11218

PRECISE GRADING PLAN
ACCESS ROAD
AREA 2

DRAWING
C010C
SHEET
47 OF **632**

FILENAME: 6232A-C010C.dwg
LAST UPDATED: 12/08/2011 11:48 AM
LAST SAVED BY: scook

KEY NOTES

58 CONSTRUCT ASPHALT PAVEMENT JOIN PER DETAIL 1 ON DWG C022

72 ASPHALT PAVING PER DETAIL 1 ON DWG C021

NOTES

1. PROTECT IN PLACE ALL EXISTING UNDERGROUND UTILITY PIPELINES, CONDUITS, VAULTS, ETC... UNLESS OTHERWISE SPECIFIED

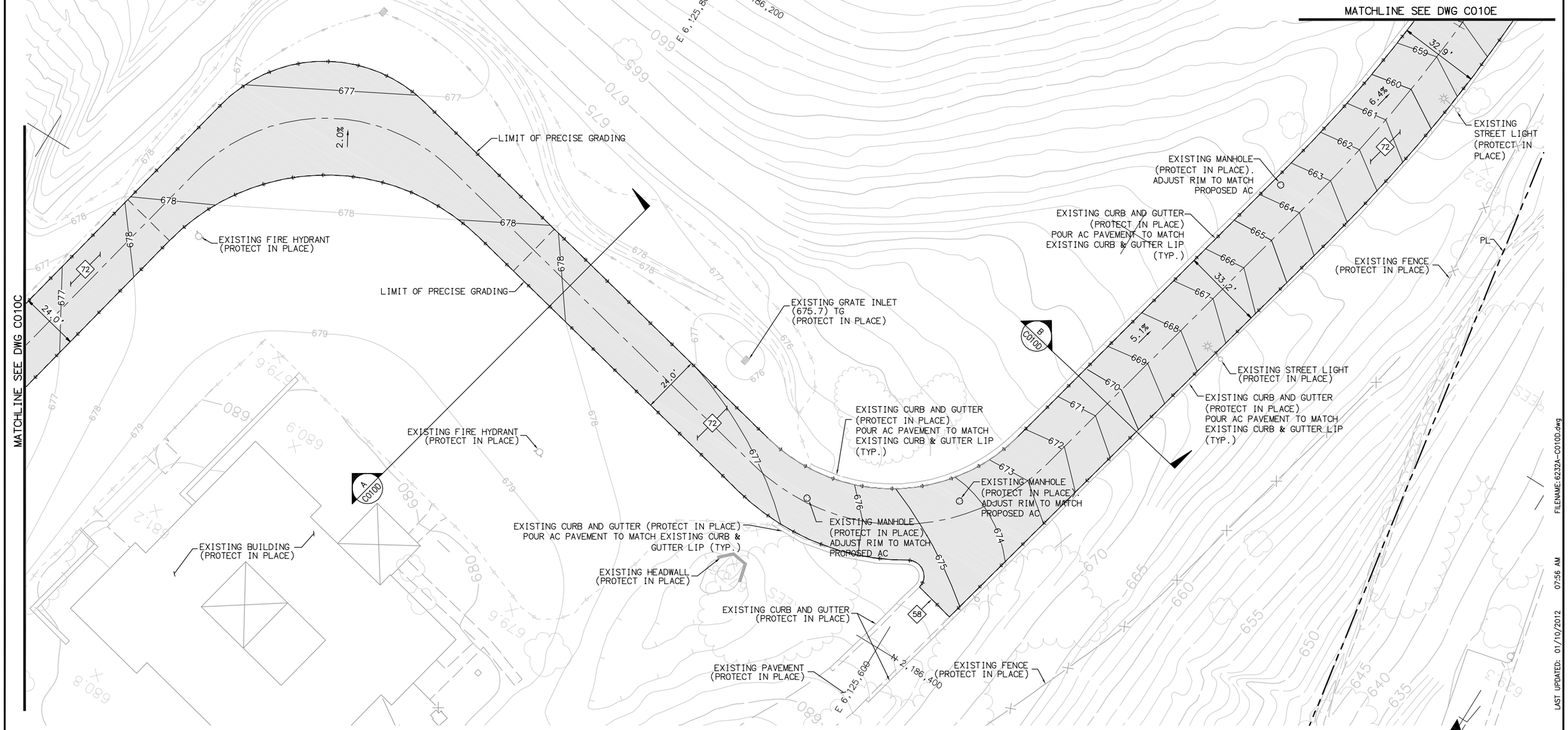

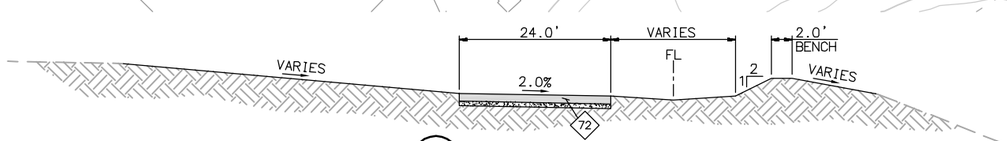

A C004D CROSS SECTION A
SCALE: NTS

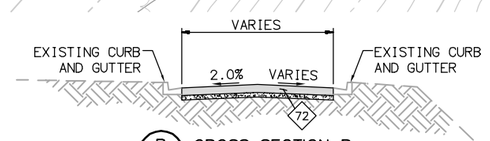

B C004D CROSS SECTION B
SCALE: NTS

SCALE: 1"=20'

20 10 0 20 40 60

SCALE: 1"=20'

FILENAME: 6232A-C010D.dwg

LAST UPDATED: 01/10/2012 07:56 AM

LAST SAVED BY: scook

No.	DATE	REVISIONS	APPROVED

DESIGNED: JTO
DRAWN: SMC
CHECKED: JTO

RBF CONSULTING

carollo

IRVINE RANCH WATER DISTRICT

STEVEN M. COOK	RCE NO. 76947	PROJECT ENGINEER	DATE
CINDY MILLER	RCE NO. 58116	PROJECT MANAGER	DATE
PATRICIA UEMATSU	RCE NO. 36762	PRINCIPAL ENGINEER	DATE

IRVINE RANCH WATER DISTRICT
BAKER WATER TREATMENT PLANT
PROJECT NO. 11218

PRECISE GRADING PLAN
ACCESS ROAD
AREA 2

DRAWING
C010D

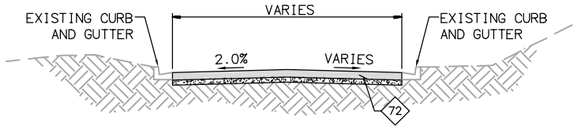

A C010E CROSS SECTION A
SCALE: NTS

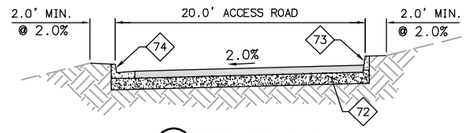

B C010E CROSS SECTION B
SCALE: NTS

NOTES

1. SPECIAL CONSTRUCTION REQUIREMENTS APPLY WITHIN SAC AND MWD EASEMENTS. SEE SPECIFICATIONS.

2. PROTECT IN PLACE ALL EXISTING UNDERGROUND UTILITY PIPELINES, CONDUITS, VAULTS, ETC... UNLESS OTHERWISE SPECIFIED

KEY NOTES

- 57 CONSTRUCT REINFORCED CONCRETE STAIRWAY PER SPPWC STD. PLAN 640-3 (W=3.0', T=12", R=6", C=6", L AND S PER PLAN.
- 58 CONSTRUCT ASPHALT PAVEMENT JOIN PER DETAIL 1 ON DWG C022
- 72 ASPHALT PAVING PER DETAIL 1 ON DWG C021
- 73 CONSTRUCT CONCRETE CURB PER OC RDMD STD PLAN 120-1, TYPE A1-150(6)
- 74 CONSTRUCT CONCRETE CURB AND GUTTER PER OC RDMD STD PLAN 120-1, MODIFIED TYPE A2-150(6), W=18"
- 76 CONSTRUCT LONGITUDINAL GUTTER PER OC RDMD STD PLAN 122-1, MODIFIED W PER PLAN.
- 99 CONSTRUCT CONCRETE CURB AND GUTTER PER OC RDMD STD PLAN 120-1, TYPE A2-150(6), W=24"
- 105 CONSTRUCT SWALE AND CURB TRANSITION PER DETAIL 4 ON DWG C022
- 106 CONSTRUCT CURB TRANSITION PER DETAIL 7 ON DWG C022

MATCHLINE SEE DWG C010G

MATCHLINE SEE DWG C010D

EXISTING CURB AND GUTTER (PROTECT IN PLACE) POUR AC PAVEMENT TO MATCH EXISTING CURB & GUTTER LIP (TYP.)

EXISTING DRAIN INLET (PROTECT IN PLACE)

JOIN EXISTING CURB AND GUTTER (647.71) TC (647.21) FL

EXISTING STREET LIGHT (PROTECT IN PLACE).

EXISTING CURB AND GUTTER (PROTECT IN PLACE) POUR AC PAVEMENT TO MATCH EXISTING CURB & GUTTER LIP (TYP.)

EXISTING DRAIN INLET (PROTECT IN PLACE)

JOIN EXISTING CURB AND GUTTER (647.71) TC (647.21) FL

EXISTING MANHOLE (PROTECT IN PLACE). ADJUST RIM TO MATCH PROPOSED AC

BEGIN CURB 644.00 TC 643.50 FS/FL

HP 644.24 TC 643.74 FL

643.33 TC 642.83 FL

645.25 FS

642.69 TC 642.19 FL

631.79 TC 631.40 FS

639.78 TC 639.28 FL

641.05 TC 640.55 FS

638.59 FS

639.50 TC 639.00 FS/FL

639.38 TC 638.88 FL

636.50 TC 636.00 FS

634.35 TC 633.85 FS

634.31 TC 633.81 FS

639.06 TC 638.56 FL

638.99 TC 638.49 FL

642.51 TC 642.01 FL

641.43 TC 640.93 FL

640.86 TC 640.36 FL

640.32 FS

JOIN EXIST. CURB & GUTTER (641.25) TC (640.58) FL

(639.47) EP

W=7.5'

WISTERIA

JOIN EXIST. CURB & GUTTER (648.30) TC (647.63) FL

SITE FENCING (SEE DWG C022)

SITE FENCING (SEE DWG C022)

25' SAC EASEMENT (SEE NOTE 1)

30' MWD EASEMENT (SEE NOTE 1)

66" WATERLINE (PROTECT IN PLACE)

39" WATERLINE (PROTECT IN PLACE)

MATCHLINE SEE DWG C009

2MG ZONE A RESERVOIR

AC PAVEMENT ACCESS ROAD (PROTECT IN PLACE)

JOIN EXISTING AC PAVEMENT

JOIN EXIST. V-DITCH (602.00) TC (601.50) FL

END CURB 604.30 TC 604.30 FS

605.50 TC 605.00 FS

606.52 TC 606.02 FS

606.11 TC 605.61 FL

610.61 TC 610.11 FS

612.27 TC 611.77 FS

613.08 TC 612.58 FL

616.55 TC 616.05 FL

618.71 TC 618.21 FL

622.02 TC 621.52 FL

609.47 TC 608.97 FL

610.88 TC 610.38 FL

613.29 TC 612.79 FL

616.94 TC 616.44 FL

612.26 TC 611.87 FL

616.45 TC 616.45 FS

618.27 TC 617.77 FS

618.00 TC 617.75 FS

617.73 TC 617.73 FS

616.72 TC 616.22 FS

616.55 TC 616.30 FS

614.35 TC 613.85 FS

613.02 TC 612.52 FS

617.38 TC 617.38 FS

616.94 TC 616.94 FS

617.20 TC 616.70 FS

626.28 TC 625.78 FS

626.52 TC 626.02 FS

FLOW CONTROL FACILITY SEE DWG C011 FOR PRECISE GRADING

MATCHLINE SEE DWG C009

MATCHLINE SEE DWG C010F

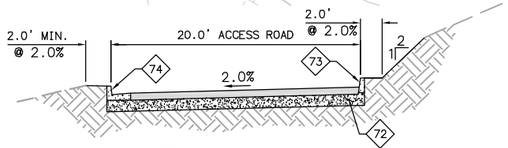

C C010E CROSS SECTION C
SCALE: NTS

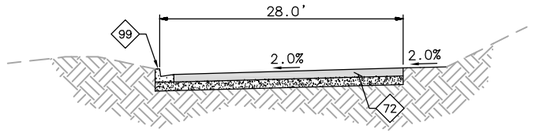

D C010E CROSS SECTION D
SCALE: NTS

SCALE: 1"=20'

No.	DATE	REVISIONS	APPROVED

DESIGNED: SMC
DRAWN: SMC
CHECKED: JTO

RBF CONSULTING

carollo

IRVINE RANCH WATER DISTRICT

STEVEN M. COOK	RCE NO. 76947	PROJECT ENGINEER	DATE
CINDY MILLER	RCE NO. 58116	PROJECT MANAGER	DATE
PATRICIA UEMATSU	RCE NO. 36762	PRINCIPAL ENGINEER	DATE

IRVINE RANCH WATER DISTRICT
BAKER WATER TREATMENT PLANT
PROJECT NO. 11218

PRECISE GRADING AND PAVING PLAN
ACCESS ROAD
AREA 2

DRAWING C010E

SHEET 49 OF 632

LAST SAVED BY: scook LAST UPDATED: 01/18/2012 06:57 AM FILENAME: 6232A-C010E.dwg

KEY NOTES

- 58 CONSTRUCT ASPHALT PAVEMENT JOIN PER DETAIL 1 ON DWG C022
- 72 ASPHALT PAVING PER DETAIL 1 ON DWG C021
- 73 CONSTRUCT CONCRETE CURB PER OC RDMD STD PLAN 120-1, TYPE A1-150(6)
- 74 CONSTRUCT CONCRETE CURB AND GUTTER PER OC RDMD STD PLAN 120-1, MODIFIED TYPE A2-150(6), W=18"
- 77 CONSTRUCT 3' V-DITCH PER DETAIL 6 ON DWG C021.

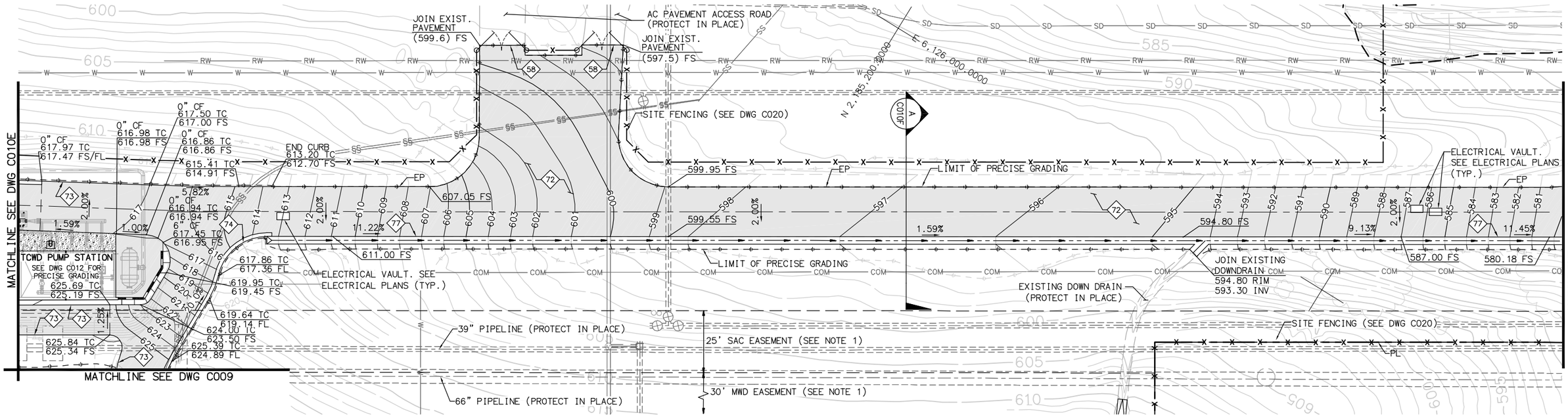

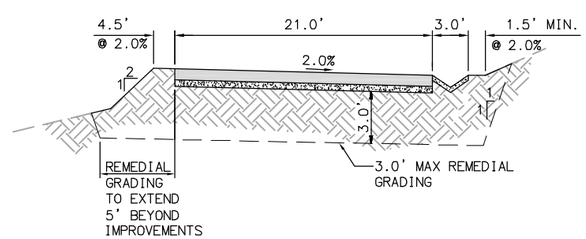

A C010F CROSS SECTION A
SCALE: NTS

NOTES

1. SPECIAL CONSTRUCTION REQUIREMENTS APPLY WITH SAC AND MWD EASEMENTS. SEE SPECIFICATIONS.

2. PROTECT IN PLACE ALL EXISTING UNDERGROUND UTILITY PIPELINES, CONDUITS, VAULTS, ETC... UNLESS OTHERWISE SPECIFIED.

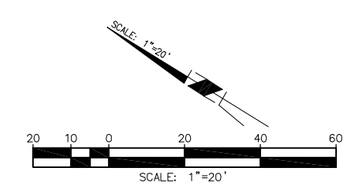

FILENAME: 6232A-C010F.dwg
LAST UPDATED: 01/31/2012 12:22 PM
LAST SAVED BY: chess

No.	DATE	REVISIONS	APPROVED

DESIGNED: SMC
DRAWN: SMC
CHECKED: JTO

RBF CONSULTING

carollo

IRVINE RANCH WATER DISTRICT

STEVEN M. COOK	RCE NO. 76947	PROJECT ENGINEER	DATE
CINDY MILLER	RCE NO. 58116	PROJECT MANAGER	DATE
PATRICIA UEMATSU	RCE NO. 36762	PRINCIPAL ENGINEER	DATE

IRVINE RANCH WATER DISTRICT
BAKER WATER TREATMENT PLANT
PROJECT NO. 11218

PRECISE GRADING AND PAVING PLAN
ACCESS ROAD
AREA 2

DRAWING C010F

SHEET 50 OF 632

NOTES

1. PROTECT IN PLACE ALL EXISTING UNDERGROUND UTILITY PIPELINES, CONDUITS, VAULTS, ETC... UNLESS OTHERWISE SPECIFIED.

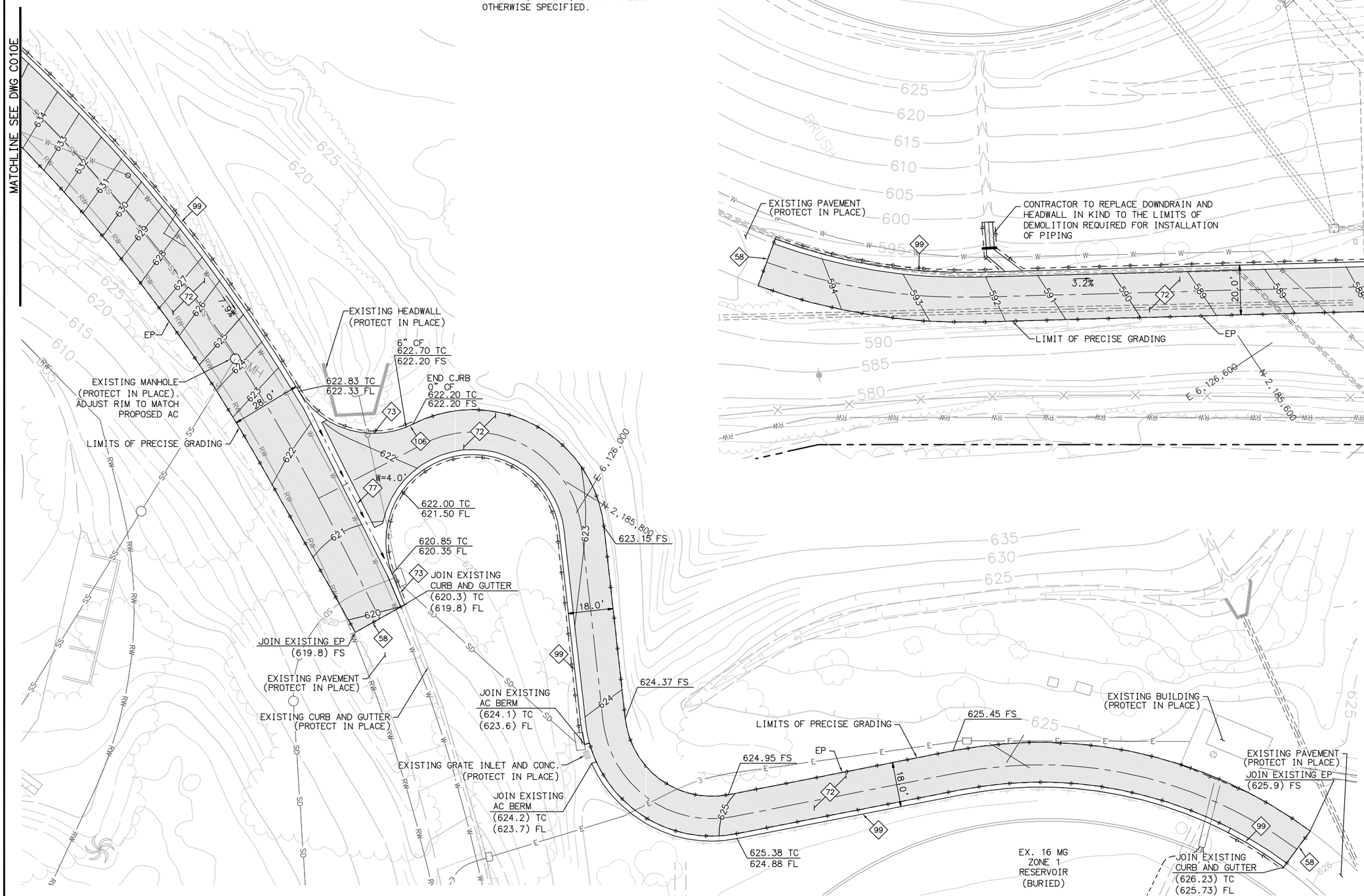

KEY NOTES

- (58) CONSTRUCT ASPHALT PAVEMENT JOIN PER DETAIL 1 ON DWG C022
- (72) ASPHALT PAVING PER DETAIL 1 ON DWG C021
- (73) CONSTRUCT CONCRETE CURB PER OC RDMD STD PLAN 120-1, TYPE A1-150(6)
- (77) CONSTRUCT 3' V-DITCH PER DETAIL 6 ON DWG C021.
- (99) CONSTRUCT CONCRETE CURB AND GUTTER PER OC RDMD STD PLAN 120-1, TYPE A2-150(6), W=24"
- (106) CONSTRUCT CURB TRANSITION PER DETAIL 7 ON DWG C022

FILENAME: 6232A-C010G.dwg
LAST UPDATED: 01/10/2012 08:03 AM
LAST SAVED BY: scook

No.	DATE	REVISIONS	APPROVED

DESIGNED: JTO
DRAWN: SMC
CHECKED: JTO

RBF CONSULTING

carollo

IRVINE RANCH WATER DISTRICT

STEVEN M. COOK	RCE NO. 76947	PROJECT ENGINEER	DATE
CINDY MILLER	RCE NO. 58116	PROJECT MANAGER	DATE
PATRICIA UEMATSU	RCE NO. 36762	PRINCIPAL ENGINEER	DATE

IRVINE RANCH WATER DISTRICT
BAKER WATER TREATMENT PLANT
PROJECT NO. 11218

PRECISE GRADING PLAN
ACCESS ROAD
AREA 2

DRAWING
C010G
SHEET
51 OF 632

KEY NOTES

65 2'-0' WIDE CONCRETE DRAINAGE SWALE PER DETAIL 2 ON DWG C021

69 CONCRETE FLATWORK PER DETAIL 2 ON DWG C022

105 CONSTRUCT SWALE AND CURB TRANSITION PER DETAIL 4 ON DWG C022

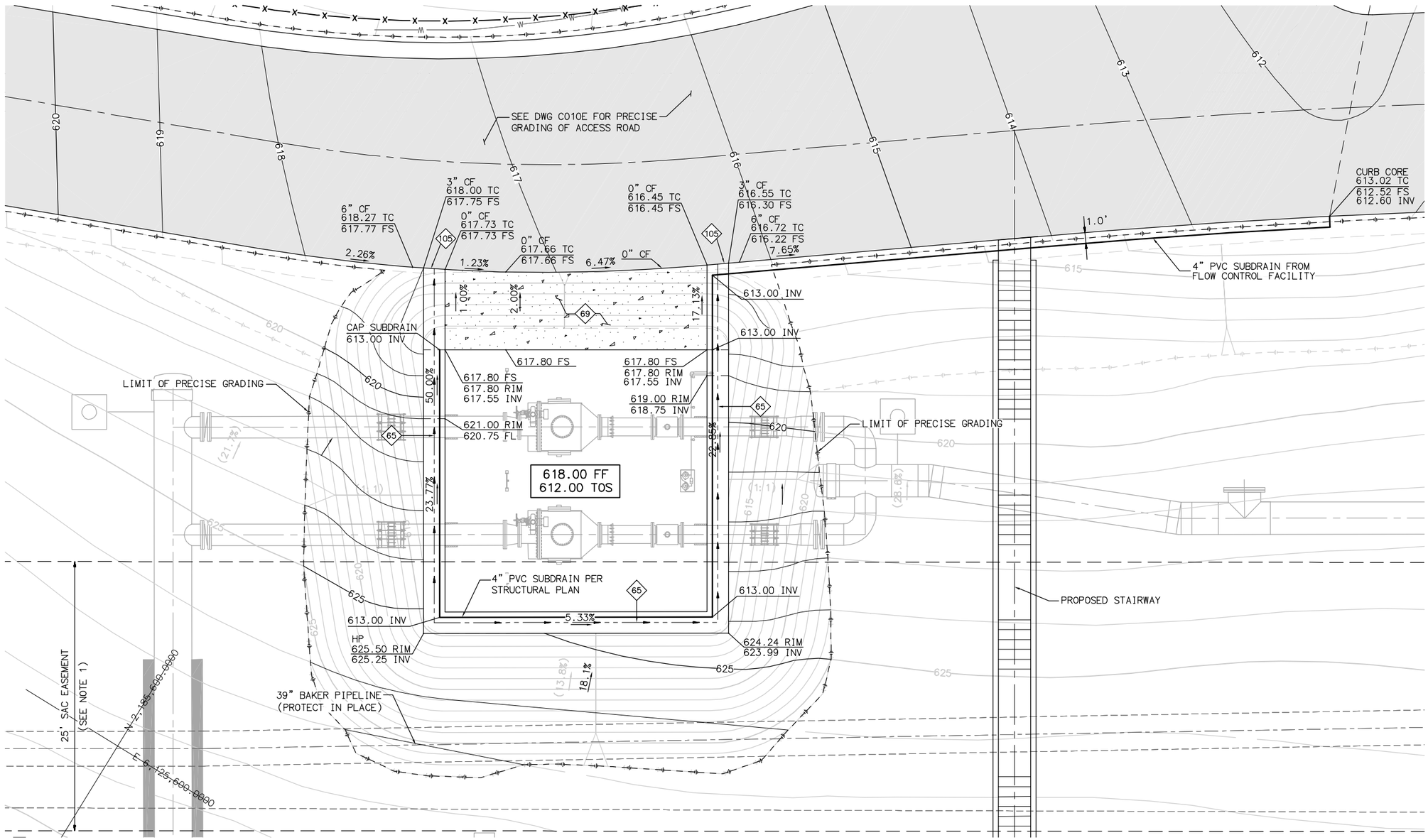

NOTES

1. SPECIAL CONSTRUCTION REQUIREMENTS APPLY WITHIN SAC AND MWD EASEMENTS. SEE SPECIFICATIONS.
2. PROTECT IN PLACE ALL EXISTING UNDERGROUND UTILITY PIPELINES, CONDUITS, VAULTS, ETC... UNLESS OTHERWISE SPECIFIED.

5 0 5 10 15
SCALE: 1"=5'

FILENAME: 6232A-C011.dwg
LAST UPDATED: 01/18/2012 07:11 AM
LAST SAVED BY: scook

No.	DATE	REVISIONS	APPROVED

DESIGNED: JTO
DRAWN: SMC
CHECKED: JTO

RBF CONSULTING
carollo
IRVINE RANCH WATER DISTRICT

STEVEN M. COOK	RCE NO. 76947	PROJECT ENGINEER	DATE
CINDY MILLER	RCE NO. 58116	PROJECT MANAGER	DATE
PATRICIA UEMATSU	RCE NO. 36762	PRINCIPAL ENGINEER	DATE

IRVINE RANCH WATER DISTRICT
BAKER WATER TREATMENT PLANT
PROJECT NO. 11218

PRECISE GRADING PLAN
FLOW CONTROL FACILITY
AREA 2

DRAWING
C011
SHEET
52 OF **632**

SOC WMA

KEY NOTES

- 69 CONCRETE FLATWORK PER DETAIL 2 ON DWG C022
- 72 ASPHALT PAVING PER DETAIL 1 ON DWG C021
- 97 CONSTRUCT MASONRY RETAINING WALL PER STRUCUTURAL DRAWINGS S020 AND S021
- 106 CONSTRUCT CURB TRANSITION PER DETAIL 7 ON DWG C022
- 121 INSTALL CABLE RAILING PER CALTRANS STD. PLAN B11-47

NOTES

1. SPECIAL CONSTRUCTION REQUIREMENTS APPLY WITHIN SAC AND MWD EASEMENTS. SEE SPECIFICATIONS.

2. PROTECT IN PLACE ALL EXISTING UNDERGROUND UTILITY PIPELINES, CONDUITS, VAULTS, ETC... UNLESS OTHERWISE SPECIFIED.

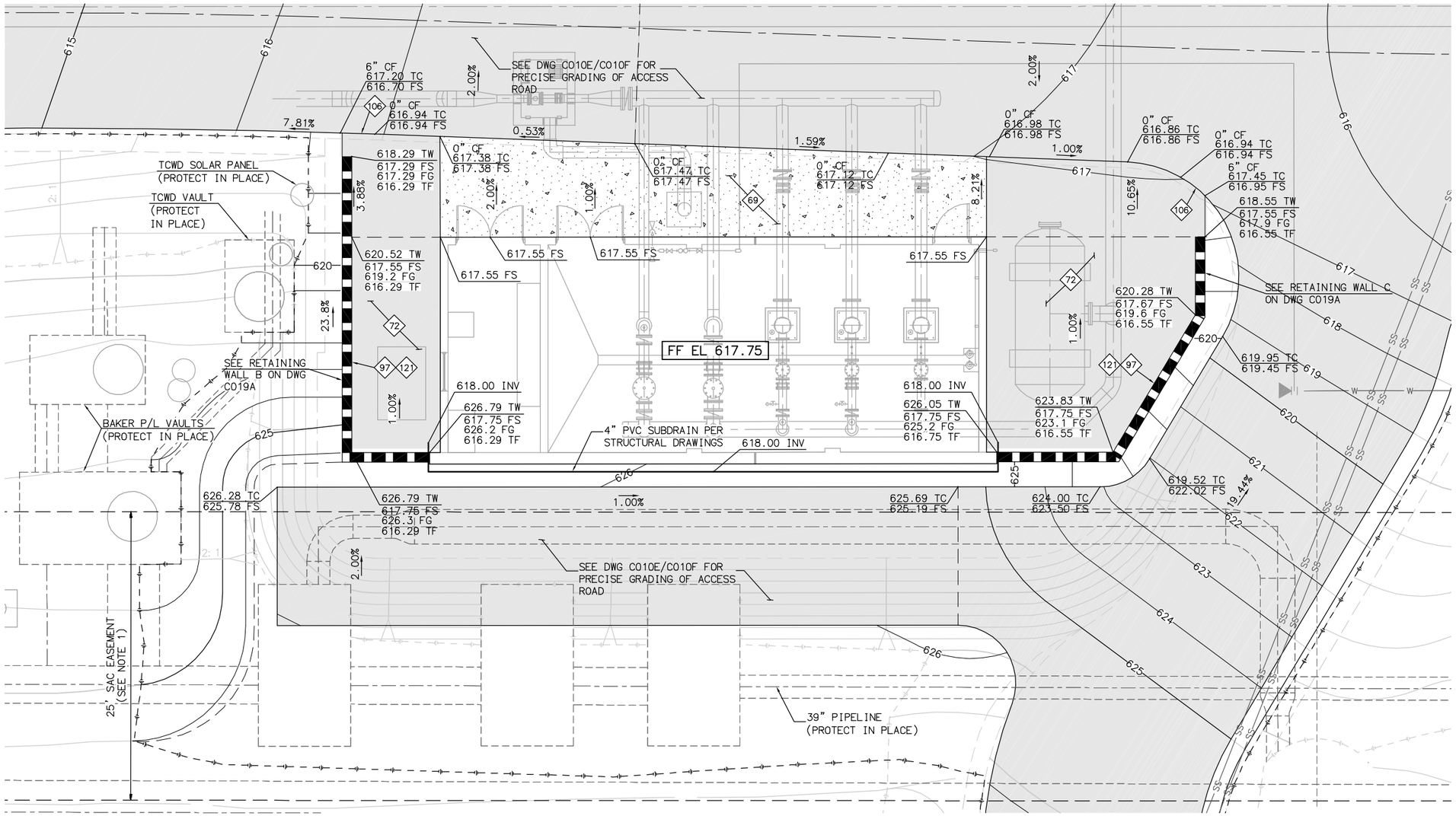

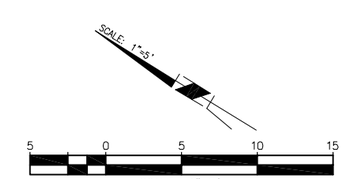

FILENAME: 6232A-C012.dwg
LAST UPDATED: 01/18/2012 09:47 AM
LAST SAVED BY: scook

No.	DATE	REVISIONS	APPROVED

DESIGNED: SMC
DRAWN: SMC
CHECKED: JTO

RBF CONSULTING

carollo

IRVINE RANCH WATER DISTRICT

STEVEN M. COOK	RCE NO. 76947	PROJECT ENGINEER	DATE
CINDY MILLER	RCE NO. 58116	PROJECT MANAGER	DATE
PATRICIA UEMATSU	RCE NO. 36762	PRINCIPAL ENGINEER	DATE

IRVINE RANCH WATER DISTRICT
BAKER WATER TREATMENT PLANT
PROJECT NO. 11218

PRECISE GRADING PLAN
TCWD PUMP STATION
AREA 2

DRAWING C012

SHEET 53 OF 632

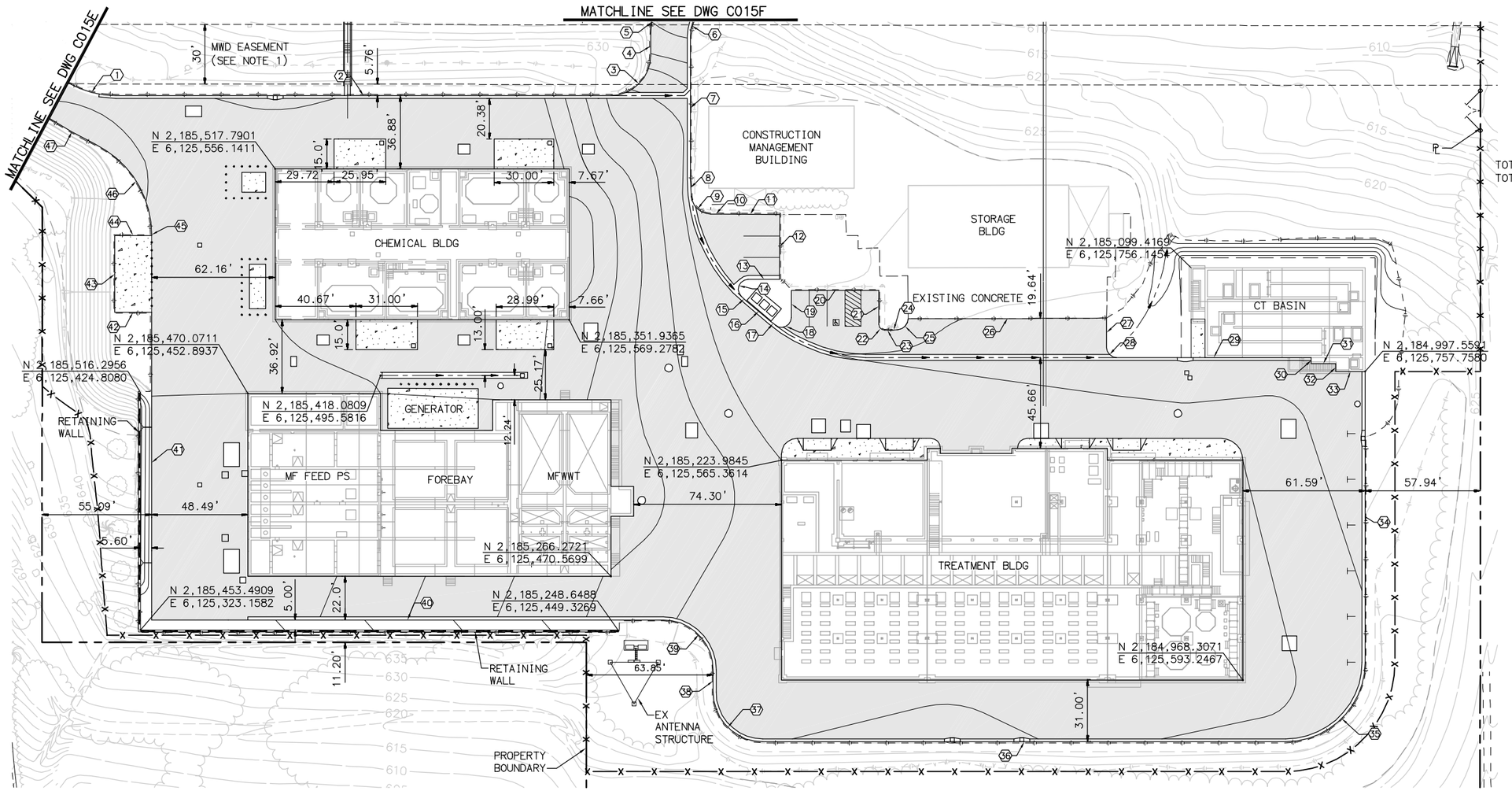

LINE/CURVE DATA TABLE				
NO	BEARING/DELTA	RADIUS	LENGTH	TANGENT
1	29°16'08"	48.50'	24.78'	12.66'
2	N31°42'36"W	--	249.07'	--
3	90°00'00"	20.00'	31.42'	20.00'
4	N58°17'24"E	--	9.85'	--
5	20°40'19"	40.00'	14.43'	7.30'
6	30°50'43"	20.00'	10.77'	5.52'
7	N58°17'24"E	--	72.23'	--
8	05°57'30"	80.00'	8.32'	4.16'
9	83°41'58"	10.00'	14.61'	8.96'
10	N31°22'04"W	--	5.23'	--
11	N31°22'04"W	--	29.43'	--
12	N58°28'19"E	--	32.57'	--
13	N31°57'36"W	--	15.77'	--
14	137°02'22"	5.00'	11.96'	12.71'
15	02°25'23"	80.00'	3.38'	1.69'
16	N08°34'39"E	--	16.00'	--
17	02°08'22"	78.63'	2.94'	1.47'
18	127°31'16"	5.00'	11.13'	10.14'
19	N58°17'24"E	--	13.47'	--
20	N31°42'36"W	--	44.00'	--
21	N58°17'24"E	--	16.96'	--
22	92°03'43"	3.00'	4.82'	3.11'
23	N33°46'19"W	--	2.50'	--
24	N33°45'30"W	--	3.88'	--
25	85°15'39"	5.75'	8.56'	5.30'
26	N31°51'12"W	--	99.89'	--
27	N58°17'24"E	--	14.84'	--
28	90°00'00"	5.00'	7.85'	5.00'
29	N31°42'36"W	--	97.97'	--
30	N58°17'24"E	--	3.00'	--
31	N31°42'36"W	--	12.23'	--
32	N58°17'24"E	--	4.00'	--
33	N31°42'36"W	--	14.85'	--
34	N58°17'24"E	--	146.33'	--
35	90°00'00"	40.00'	62.83'	40.00'
36	N31°42'36"W	--	263.09'	--
37	90°00'00"	25.00'	39.27'	25.00'
38	N58°17'24"E	--	11.25'	--
39	90°00'00"	25.00'	39.27'	25.00'
40	N31°42'36"W	--	257.62'	--
41	N58°17'24"E	--	154.81'	--
42	N31°41'09"W	--	18.50'	--
43	N58°18'51"E	--	38.50'	--
44	N31°41'09"W	--	18.48'	--
45	N58°17'24"E	--	0.97'	--
46	64°16'26"	50.00'	56.09'	31.41'
47	07°39'01"	200.00'	26.70'	13.37'

FILENAME: 6232A-C014.dwg

LAST UPDATED: 01/31/2012 02:08 PM

LAST SAVED BY: chess

NOTES

1. SPECIAL CONSTRUCTION REQUIREMENTS APPLY WITHIN SAC AND MWD EASEMENTS. SEE SPECIFICATIONS.

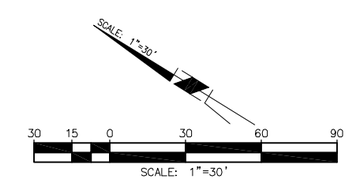

No.	DATE	REVISIONS	APPROVED

DESIGNED: SMC
DRAWN: SMC
CHECKED: JTO

RBF CONSULTING

carollo

IRVINE RANCH WATER DISTRICT

STEVEN M. COOK	RCE NO. 76947	PROJECT ENGINEER	DATE
CINDY MILLER	RCE NO. 58116	PROJECT MANAGER	DATE
PATRICIA UEMATSU	RCE NO. 36762	PRINCIPAL ENGINEER	DATE

IRVINE RANCH WATER DISTRICT
BAKER WATER TREATMENT PLANT
PROJECT NO. 11218

HORIZONTAL CONTROL PLAN
WATER TREATMENT PLANT
AREA 1

DRAWING **C014**

SHEET **55** OF **632**

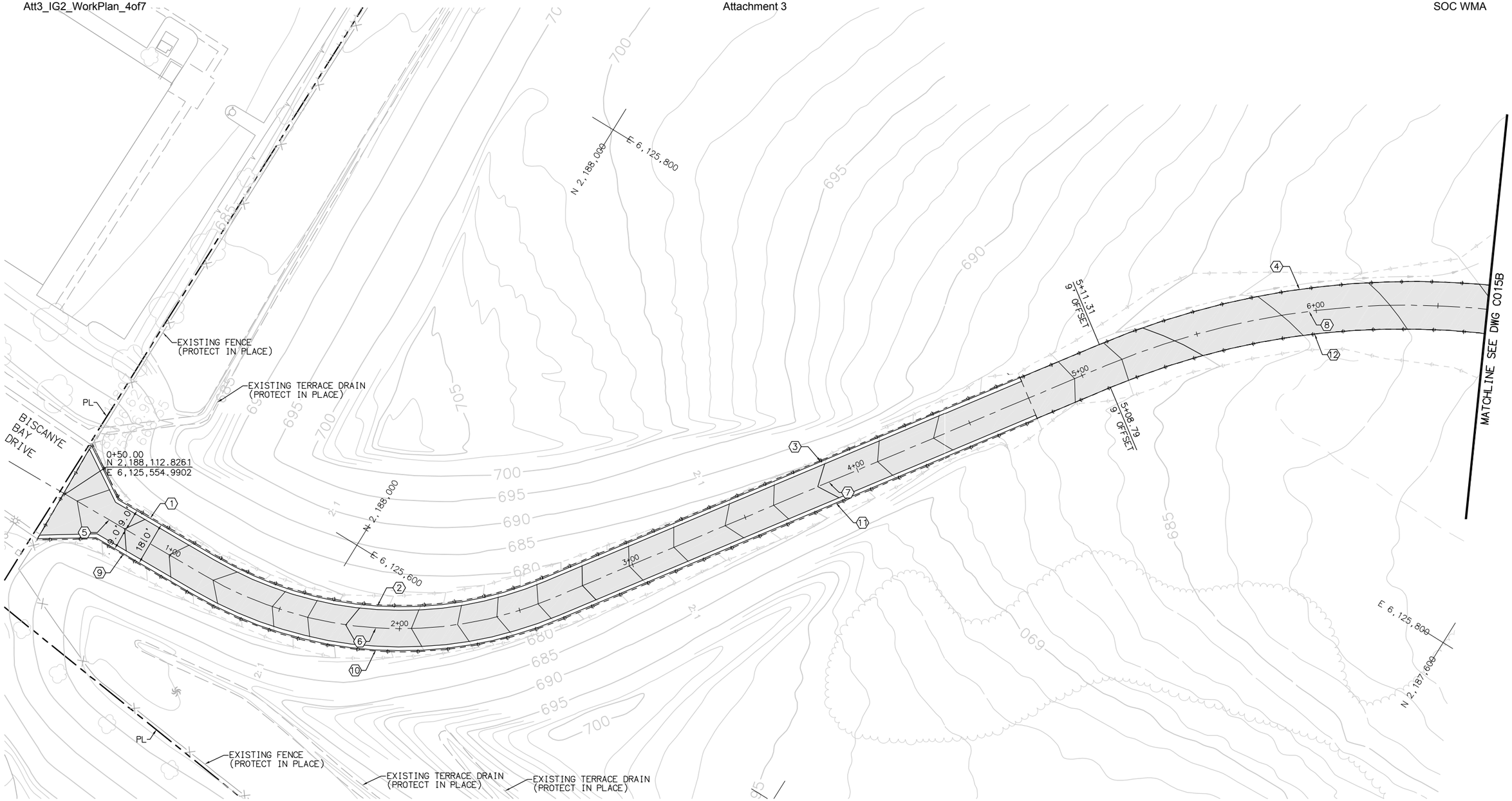

LINE/CURVE DATA TABLE					
	NO	BEARING/DELTA	RADIUS	LENGTH	TANGENT
	1	N01°26'30"W	--	66.19'	--
	2	53°01'14"	151.00'	139.73'	75.32'
	3	N54°27'44"W	--	246.99'	--
TOTAL	4	66°58'35"	332.00'	388.09'	219.65'
	5	N01°26'30"W	--	66.29'	--
	6	53°01'14"	160.00'	148.06'	79.81'

LINE/CURVE DATA TABLE					
	NO	BEARING/DELTA	RADIUS	LENGTH	TANGENT
	7	N54°27'44"W	--	245.71'	--
TOTAL	8	66°58'35"	320.00'	374.07'	211.71'
	9	N01°26'30"W	--	66.40'	--
	10	53°01'14"	169.00'	156.39'	84.30'
	11	N54°27'44"W	--	244.44'	--
TOTAL	12	66°58'35"	308.00'	360.04'	203.77'

SCALE: 1"=20'

20 10 0 20 40 60

SCALE: 1"=20'

LAST SAVED BY: scook LAST UPDATED: 01/18/2012 07:34 AM FILENAME: 6232A-C015A.dwg

No.	DATE	REVISIONS	APPROVED

DESIGNED: JTO
DRAWN: SMC
CHECKED: JTO

RBF CONSULTING

carollo

IRVINE RANCH WATER DISTRICT

STEVEN M. COOK	RCE NO. 76947	PROJECT ENGINEER	DATE
CINDY MILLER	RCE NO. 58116	PROJECT MANAGER	DATE
PATRICIA UEMATSU	RCE NO. 36762	PRINCIPAL ENGINEER	DATE

IRVINE RANCH WATER DISTRICT
BAKER WATER TREATMENT PLANT
PROJECT NO. 11218

HORIZONTAL CONTROL PLAN
ACCESS ROAD
AREA 2

DRAWING
C015A
SHEET
56 OF **632**

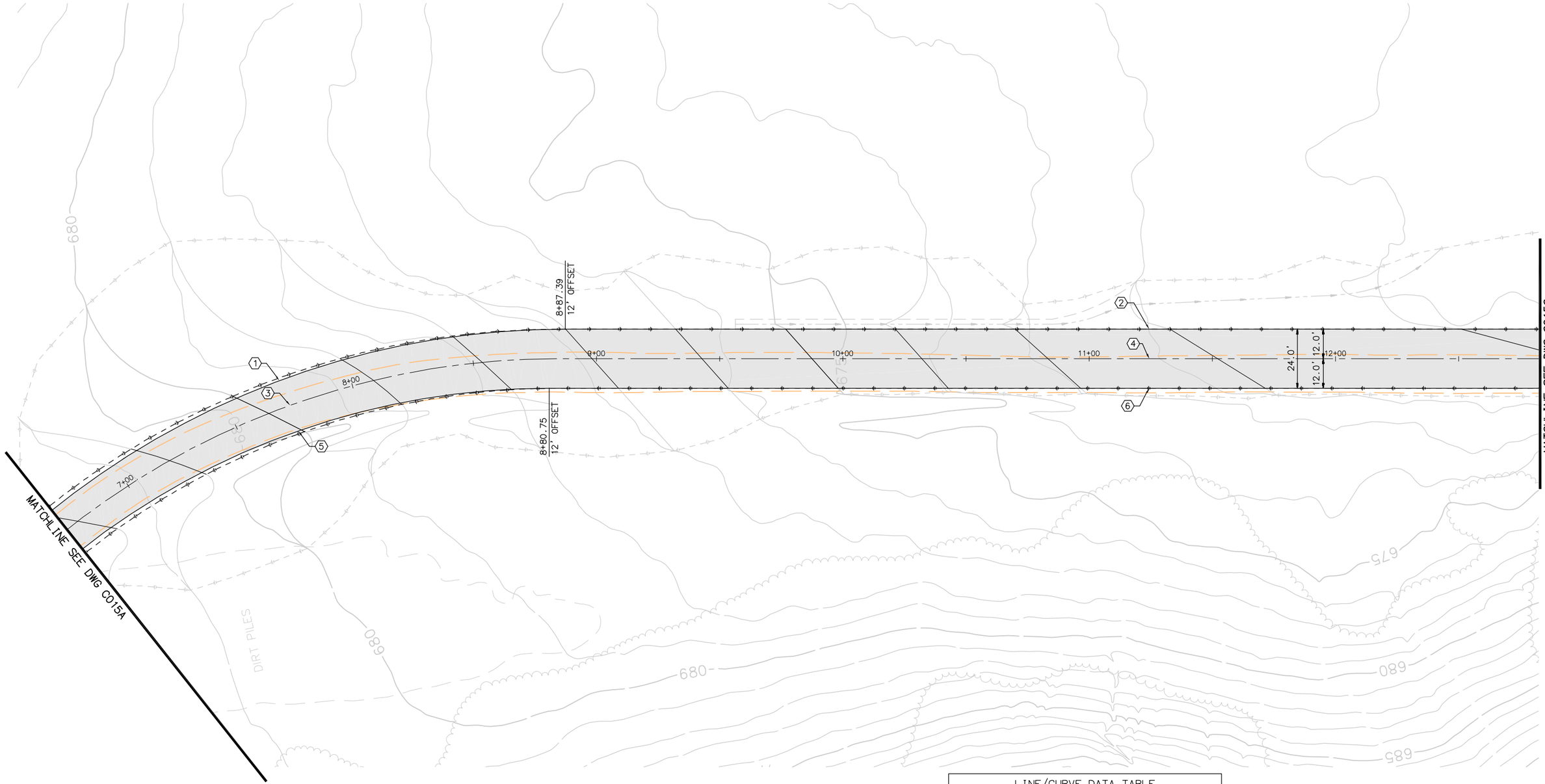

	LINE/CURVE DATA TABLE				
	NO	BEARING/DELTA	RADIUS	LENGTH	TANGENT
TOTAL	1	66°58'35"	332.00'	388.09'	219.65'
TOTAL	2	N12°30'51"E	--	477.18'	--
TOTAL	3	66°58'35"	320.00'	374.07'	211.71'
TOTAL	4	N12°30'51"E	--	480.44'	--
TOTAL	5	66°58'35"	308.00'	360.04'	203.77'
TOTAL	6	N12°30'51"E	--	483.70'	--

SCALE: 1"=20'

20 10 0 20 40 60

SCALE: 1"=20'

LAST SAVED BY: mkallenbough LAST UPDATED: 01/09/2012 12:10 PM FILENAME: 6232A-C015B.dwg

No.	DATE	REVISIONS	APPROVED

DESIGNED: JTO
DRAWN: SMC
CHECKED: JTO

RBF CONSULTING

carollo

IRVINE RANCH WATER DISTRICT

STEVEN M. COOK RCE NO. 76947 PROJECT ENGINEER DATE
CINDY MILLER RCE NO. 58116 PROJECT MANAGER DATE
PATRICIA UEMATSU RCE NO. 36762 PRINCIPAL ENGINEER DATE

IRVINE RANCH WATER DISTRICT
BAKER WATER TREATMENT PLANT
PROJECT NO. 11218

HORIZONTAL CONTROL PLAN
ACCESS ROAD
AREA 2

DRAWING
C015B
SHEET
57 OF **632**

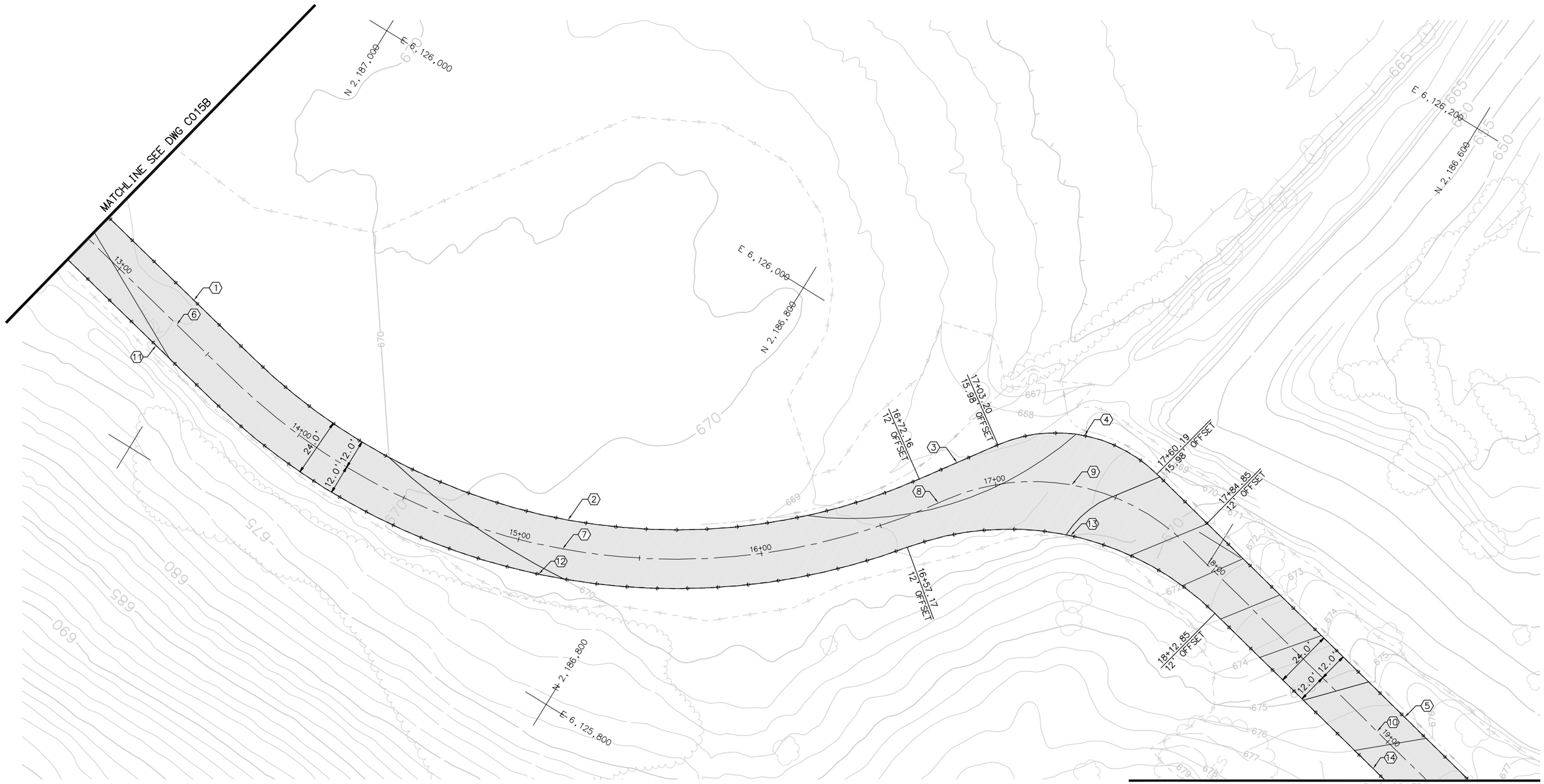

LINE/CURVE DATA TABLE					
	(NO)	BEARING/DELTA	RADIUS	LENGTH	TANGENT
TOTAL	1	N12°30'51"E	--	480.44'	--
	2	67°46'57"	248.00'	293.39'	166.59'
	3	N55°16'06"W	--	35.07'	--
	4	68°03'37"	59.00'	70.08'	39.84'
TOTAL	5	N12°47'31"E	--	292.80'	--
TOTAL	6	N12°30'51"E	--	480.44'	--
	7	67°46'57"	260.00'	307.59'	174.66'

LINE/CURVE DATA TABLE					
	(NO)	BEARING/DELTA	RADIUS	LENGTH	TANGENT
	8	N55°16'06"W	--	6.37'	--
	9	68°03'37"	89.50'	106.31'	60.44'
TOTAL	10	N12°47'31"E	--	236.65'	--
TOTAL	11	N12°30'51"E	--	480.44'	--
	12	64°28'45"	272.00'	306.10'	171.55'
	13	64°45'25"	120.00'	135.63'	76.09'
TOTAL	14	N12°47'31"E	--	181.21'	--

No.	DATE	REVISIONS	APPROVED

DESIGNED: JTO
DRAWN: SMC
CHECKED: JTO

RBF CONSULTING

carollo

IRVINE RANCH WATER DISTRICT

STEVEN M. COOK	RCE NO. 76947	PROJECT ENGINEER	DATE
CINDY MILLER	RCE NO. 58116	PROJECT MANAGER	DATE
PATRICIA UEMATSU	RCE NO. 36762	PRINCIPAL ENGINEER	DATE

IRVINE RANCH WATER DISTRICT
BAKER WATER TREATMENT PLANT
PROJECT NO. 11218

HORIZONTAL CONTROL PLAN
ACCESS ROAD
AREA 2

DRAWING
C015C
SHEET
58 OF **632**

FILENAME: 6232A-C015C.dwg
LAST UPDATED: 01/09/2012 12:15 PM
LAST SAVED BY: mkallenbaugh

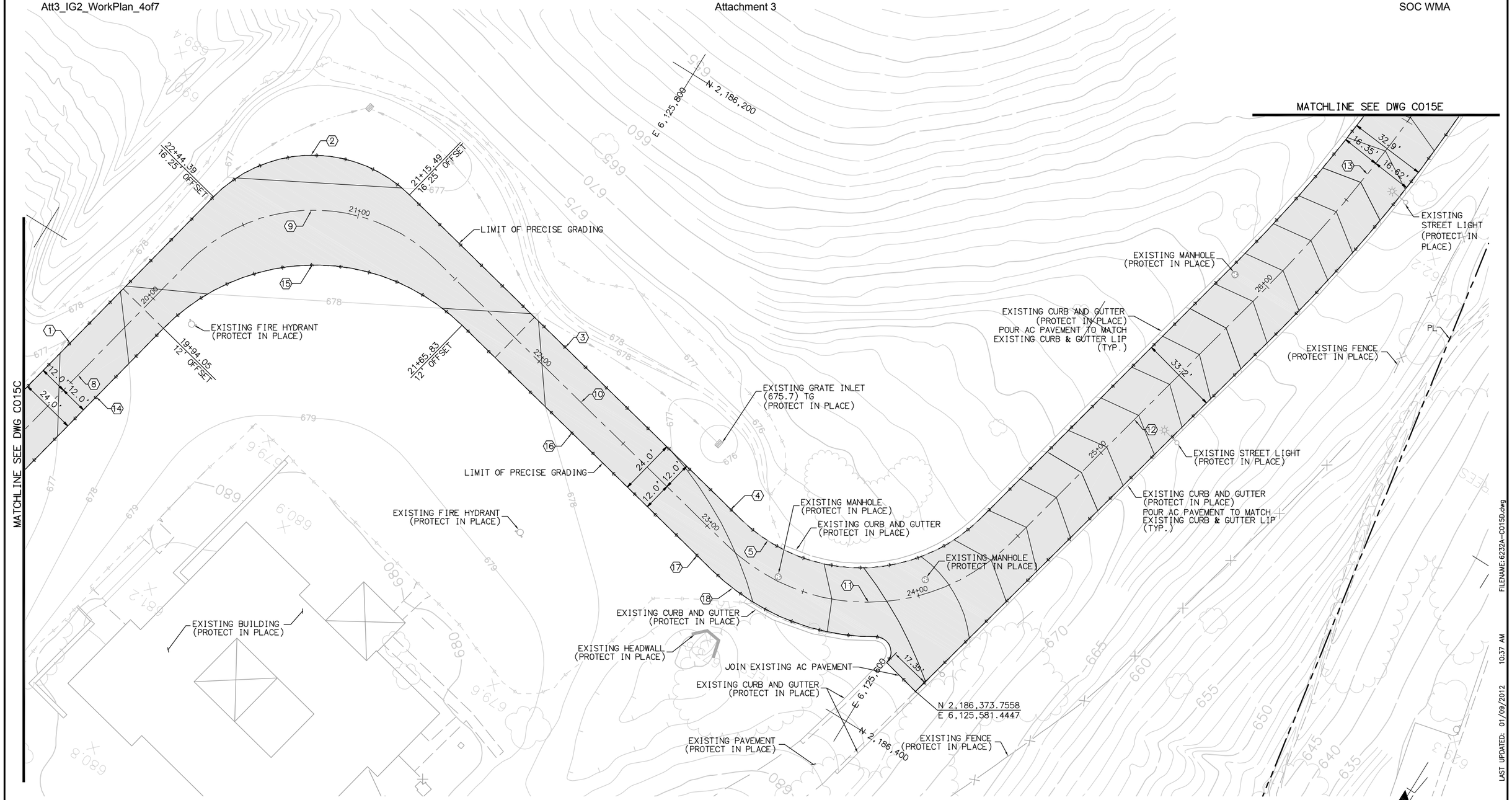

	LINE/CURVE DATA TABLE				
	NO	BEARING/DELTA	RADIUS	LENGTH	TANGENT
TOTAL	1	N12°47'31"E	--	292.80'	--
	2	89°53'29"	59.00'	92.57'	58.89'
	3	N77°19'00"W	--	185.79'	--
	4	N77°19'00"W	--	11.38'	--
	5	16°28'01"	73.00'	20.98'	10.56'
TOTAL	8	N12°47'31"E	--	236.65'	--

	LINE/CURVE DATA TABLE				
	NO	BEARING/DELTA	RADIUS	LENGTH	TANGENT
	9	89°53'29"	74.50'	116.88'	74.36'
	10	N77°19'00"W	--	173.11'	--
	11	89°16'01"	86.00'	133.99'	84.91'
	12	N13°24'59"E	--	149.37'	--
TOTAL	13	12°54'10"	616.00'	138.72'	69.65'
TOTAL	14	N12°47'31"E	--	181.21'	--

LINE/CURVE DATA TABLE				
NO	BEARING/DELTA	RADIUS	LENGTH	TANGENT
15	89°53'29"	90.00'	141.20'	89.83'
16	N77°19'00"W	--	130.89'	--
17	N77°19'00"W	--	18.17'	--
18	10°56'02"	99.00'	18.89'	9.47'

No.	DATE	REVISIONS	APPROVED

DESIGNED: JTO
DRAWN: SMC
CHECKED: JTO

RBF CONSULTING

carollo

IRVINE RANCH WATER DISTRICT

STEVEN M. COOK RCE NO. 76947 PROJECT ENGINEER DATE
CINDY MILLER RCE NO. 58116 PROJECT MANAGER DATE
PATRICIA UEMATSU RCE NO. 36762 PRINCIPAL ENGINEER DATE

IRVINE RANCH WATER DISTRICT
BAKER WATER TREATMENT PLANT
PROJECT NO. 11218

HORIZONTAL CONTROL PLAN
ACCESS ROAD
AREA 2

DRAWING
C015D
SHEET
59 OF **632**

LAST SAVED BY: scook LAST UPDATED: 01/09/2012 10:37 AM FILENAME: 6232A-C015D.dwg

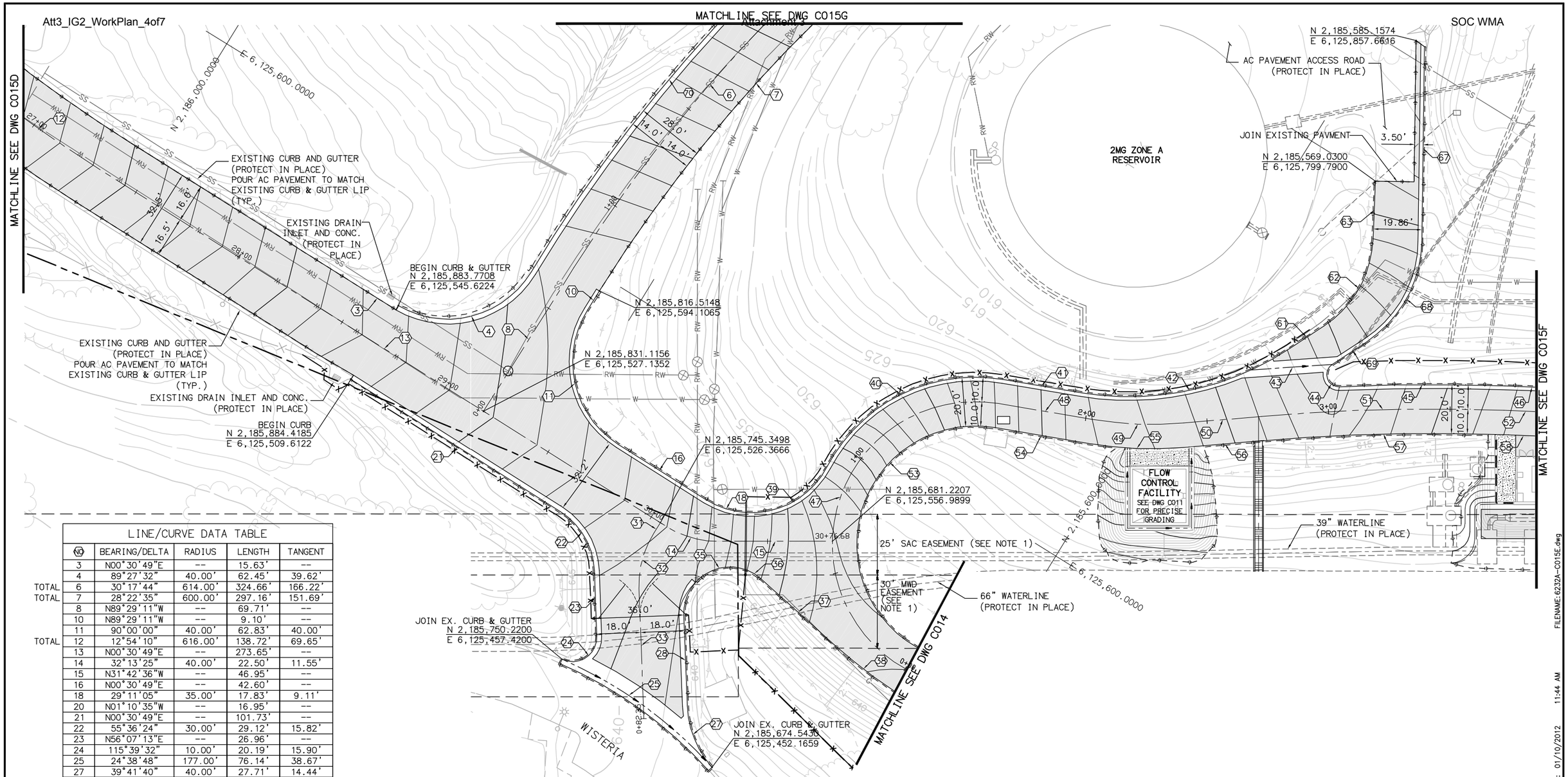

	LINE/CURVE DATA TABLE				
	NO	BEARING/DELTA	RADIUS	LENGTH	TANGENT
	3	N00°30'49"E	--	15.63'	--
	4	89°27'32"	40.00'	62.45'	39.62'
TOTAL	6	30°17'44"	614.00'	324.66'	166.22'
TOTAL	7	28°22'35"	600.00'	297.16'	151.69'
	8	N89°29'11"W	--	69.71'	--
	10	N89°29'11"W	--	9.10'	--
	11	90°00'00"	40.00'	62.83'	40.00'
TOTAL	12	12°54'10"	616.00'	138.72'	69.65'
	13	N00°30'49"E	--	273.65'	--
	14	32°13'25"	40.00'	22.50'	11.55'
	15	N31°42'36"W	--	46.95'	--
	16	N00°30'49"E	--	42.60'	--
	18	29°11'05"	35.00'	17.83'	9.11'
	20	N01°10'35"W	--	16.95'	--
	21	N00°30'49"E	--	101.73'	--
	22	55°36'24"	30.00'	29.12'	15.82'
	23	N56°07'13"E	--	26.96'	--
	24	115°39'32"	10.00'	20.19'	15.90'
	25	24°38'48"	177.00'	76.14'	38.67'
	27	39°41'40"	40.00'	27.71'	14.44'
	28	N56°07'13"E	--	37.32'	--
	31	N89°29'11"W	--	4.97'	--
	32	34°23'36"	40.00'	24.01'	12.38'
	33	N56°07'13"E	--	41.03'	--
	35	113°35'26"	19.00'	37.67'	29.03'
	36	20°33'07"	19.00'	6.82'	3.44'
	37	N10°15'46"E	--	41.03'	--
	38	08°35'47"	200.00'	30.01'	15.03'
	39	65°26'01"	35.00'	39.97'	22.48'
	40	71°57'56"	68.50'	86.04'	49.74'
	41	N22°08'21"W	--	32.51'	--
	42	42°53'40"	120.00'	89.84'	47.14'
	43	N35°38'54"W	--	33.37'	--
	44	149°16'53"	5.00'	13.03'	18.20'
	45	04°45'00"	820.00'	67.98'	34.01'

	LINE/CURVE DATA TABLE				
	NO	BEARING/DELTA	RADIUS	LENGTH	TANGENT
TOTAL	46	N29°33'54"W	--	65.44'	--
	47	160°18'07"	58.50'	163.67'	336.96'
	48	N22°08'21"W	--	38.93'	--
	49	14°28'01"	150.00'	37.87'	19.04'
	50	N36°36'22"W	--	32.10'	--
	51	07°02'28"	810.00'	99.54'	49.83'
TOTAL	52	N29°33'54"W	--	65.44'	--
	53	160°18'07"	48.50'	135.69'	279.36'
	54	N22°08'21"W	--	38.93'	--
	55	14°28'01"	160.00'	40.40'	20.31'
	56	N36°36'22"W	--	32.10'	--

	LINE/CURVE DATA TABLE				
	NO	BEARING/DELTA	RADIUS	LENGTH	TANGENT
	57	07°02'28"	800.00'	98.31'	49.22'
TOTAL	58	N29°33'54"W	--	64.81'	--
	61	N65°02'01"W	--	16.75'	--
	62	54°12'55"	45.00'	42.58'	23.04'
	63	N60°45'04"E	--	23.78'	--
	67	N59°10'04"E	--	79.92'	--
	68	55°47'55"	50.00'	48.69'	26.47'
	69	N65°02'01"W	--	17.06'	--
TOTAL	70	27°47'51"	628.00'	304.68'	155.40'

NOTES

1. SPECIAL CONSTRUCTION REQUIREMENTS APPLY WITHIN SAC AND MWD EASEMENTS. SEE SPECIFICATIONS.

SCALE: 1"=20'

20 10 0 20 40 60

SCALE: 1"=20'

FILENAME: 6232A-C015E.dwg LAST UPDATED: 01/10/2012 11:44 AM LAST SAVED BY: mkallenbough

No.	DATE	REVISIONS	APPROVED

DESIGNED: JTO
DRAWN: SMC
CHECKED: JTO

RBF CONSULTING

carollo

IRVINE RANCH WATER DISTRICT

STEVEN M. COOK RCE NO. 76947 PROJECT ENGINEER DATE
CINDY MILLER RCE NO. 58116 PROJECT MANAGER DATE
PATRICIA UEMATSU RCE NO. 36762 PRINCIPAL ENGINEER DATE

IRVINE RANCH WATER DISTRICT
BAKER WATER TREATMENT PLANT
PROJECT NO. 11218

HORIZONTAL CONTROL PLAN
ACCESS ROAD
AREA 2

DRAWING C015E

SHEET 60 OF 632

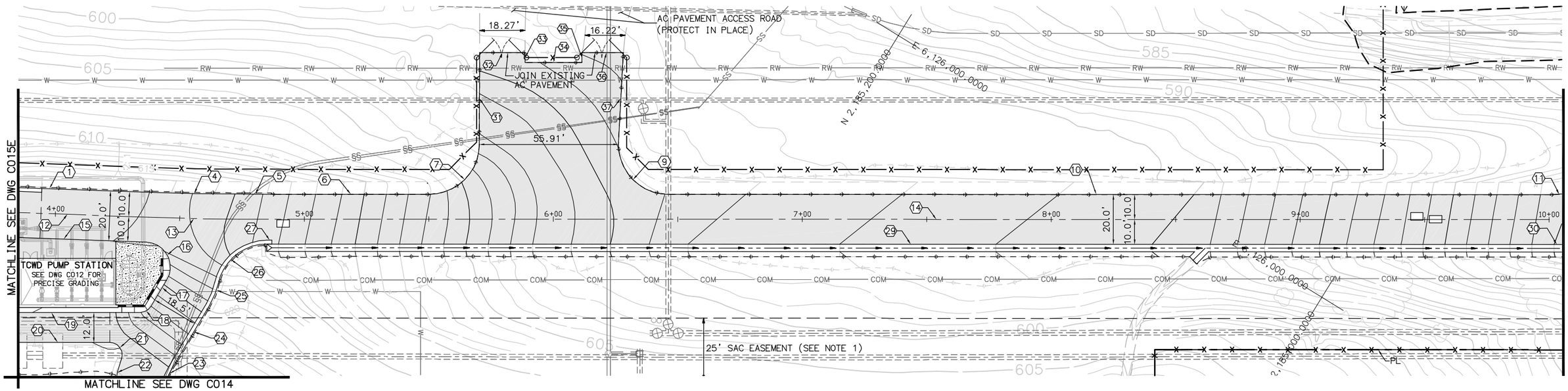

	LINE/CURVE DATA TABLE				
	NO	BEARING/DELTA	RADIUS	LENGTH	TANGENT
TOTAL	1	N29°33'54"W	--	65.44'	--
	4	02°05'38"	980.00'	35.81'	17.91'
	5	N31°39'32"W	--	13.31'	--
	6	N31°39'32"W	--	63.24'	--
	7	90°00'00"	20.00'	31.42'	20.00'
	9	90°08'34"	20.00'	31.47'	20.05'
	10	N31°39'32"W	--	353.99'	--
TOTAL	11	90°14'27"	40.00'	63.00'	40.17'
TOTAL	12	N29°33'54"W	--	65.44'	--
	13	02°05'38"	990.00'	36.18'	18.09'
	14	N31°39'32"W	--	526.46'	--
	15	N29°33'54"W	--	64.81'	--
TOTAL	16	118°42'01"	10.00'	20.72'	16.88'

	LINE/CURVE DATA TABLE				
	NO	BEARING/DELTA	RADIUS	LENGTH	TANGENT
	17	N89°08'07"E	--	12.33'	--
	18	59°09'17"	5.00'	5.16'	2.84'
	19	N31°42'36"W	--	71.32'	--
	20	N31°42'36"W	--	59.01'	--
	21	110°40'19"	5.00'	9.66'	7.23'
TOTAL	22	20°40'19"	40.00'	14.43'	7.30'
TOTAL	23	30°50'43"	20.00'	10.77'	5.52'
	24	N89°08'07"E	--	29.58'	--
	25	18°26'53"	30.00'	9.66'	4.87'
	26	77°39'14"	20.00'	27.11'	16.10'
	27	N31°39'32"W	--	2.00'	--
	29	N31°39'32"W	--	513.14'	--
TOTAL	30	N31°39'32"W	--	61.67'	--

LINE/CURVE DATA TABLE				
NO	BEARING/DELTA	RADIUS	LENGTH	TANGENT
31	N58°32'27"E	--	36.86'	--
32	N31°44'36"W	--	18.20'	--
33	N58°17'24"E	--	4.01'	--
34	N31°42'36"W	--	22.92'	--
35	N58°17'24"E	--	4.00'	--
36	N31°42'36"W	--	16.56'	--
37	N61°17'20"E	--	36.91'	--

NOTES

1. SPECIAL CONSTRUCTION REQUIREMENTS APPLY WITHIN SAC AND MWD EASEMENTS. SEE SPECIFICATIONS.

SCALE: 1"=20'

20 10 0 20 40 60

SCALE: 1"=20'

FILENAME: 6232A-C015F.dwg LAST UPDATED: 01/10/2012 11:47 AM LAST SAVED BY: mkallenbaugh

No.	DATE	REVISIONS	APPROVED

DESIGNED: JTO
DRAWN: SMC
CHECKED: JTO

RBF CONSULTING

carollo

IRVINE RANCH WATER DISTRICT

STEVEN M. COOK RCE NO. 76947 PROJECT ENGINEER DATE
CINDY MILLER RCE NO. 58116 PROJECT MANAGER DATE
PATRICIA UEMATSU RCE NO. 36762 PRINCIPAL ENGINEER DATE

IRVINE RANCH WATER DISTRICT
BAKER WATER TREATMENT PLANT
PROJECT NO. 11218

HORIZONTAL CONTROL PLAN
ACCESS ROAD
AREA 2

DRAWING
C015F
SHEET
61 OF **632**

	LINE/CURVE DATA TABLE				
	NO	BEARING/DELTA	RADIUS	LENGTH	TANGENT
TOTAL	1	30°17'44"	614.00'	324.66'	166.22'
	2	N58°43'55"W	--	54.22'	--
TOTAL	3	28°22'35"	600.00'	297.16'	151.69'
	4	N61°06'36"W	--	78.17'	--
TOTAL	5	27°47'51"	628.00'	304.68'	155.40'
	6	N61°24'05"W	--	10.78'	--
	7	N58°20'20"W	--	71.56'	--
	8	N30°48'33"E	--	47.00'	--
	9	111°10'18"	44.00'	85.38'	64.23'
	10	N38°01'09"W	--	77.65'	--
	11	94°43'09"	44.00'	72.74'	47.78'

LINE/CURVE DATA TABLE				
NO	BEARING/DELTA	RADIUS	LENGTH	TANGENT
12	N47°15'42"E	--	92.06'	--
13	47°25'13"	174.00'	144.01'	76.42'
14	86°00'18"	35.00'	52.54'	32.64'
15	110°40'45"	53.00'	102.39'	76.66'
16	N38°01'09"W	--	77.65'	--
17	94°43'09"	35.00'	57.86'	38.01'
18	N47°15'42"E	--	92.06'	--
19	47°25'13"	183.00'	151.46'	80.37'
20	N53°31'58"W	--	13.48'	--
21	195°22'43"	35.00'	119.37'	--
22	N38°01'09"W	--	77.65'	--

LINE/CURVE DATA TABLE				
NO	BEARING/DELTA	RADIUS	LENGTH	TANGENT
23	09°05'47"	53.00'	8.41'	4.22'
24	76°48'00"	53.00'	71.04'	42.01'
25	N47°15'42"E	--	92.06'	--
26	47°25'13"	165.00'	136.56'	72.46'
27	21°41'09"	230.00'	87.05'	44.05'
28	N31°58'41"E	--	207.11'	--
29	21°41'09"	220.00'	83.27'	42.14'
30	N31°58'41"E	--	207.11'	--
31	21°41'09"	240.00'	90.84'	45.97'
32	N31°58'41"E	--	207.11'	--

NOTES

1. SPECIAL CONSTRUCTION REQUIREMENTS APPLY WITHIN SAC AND MWD EASEMENTS. SEE SPECIFICATIONS.

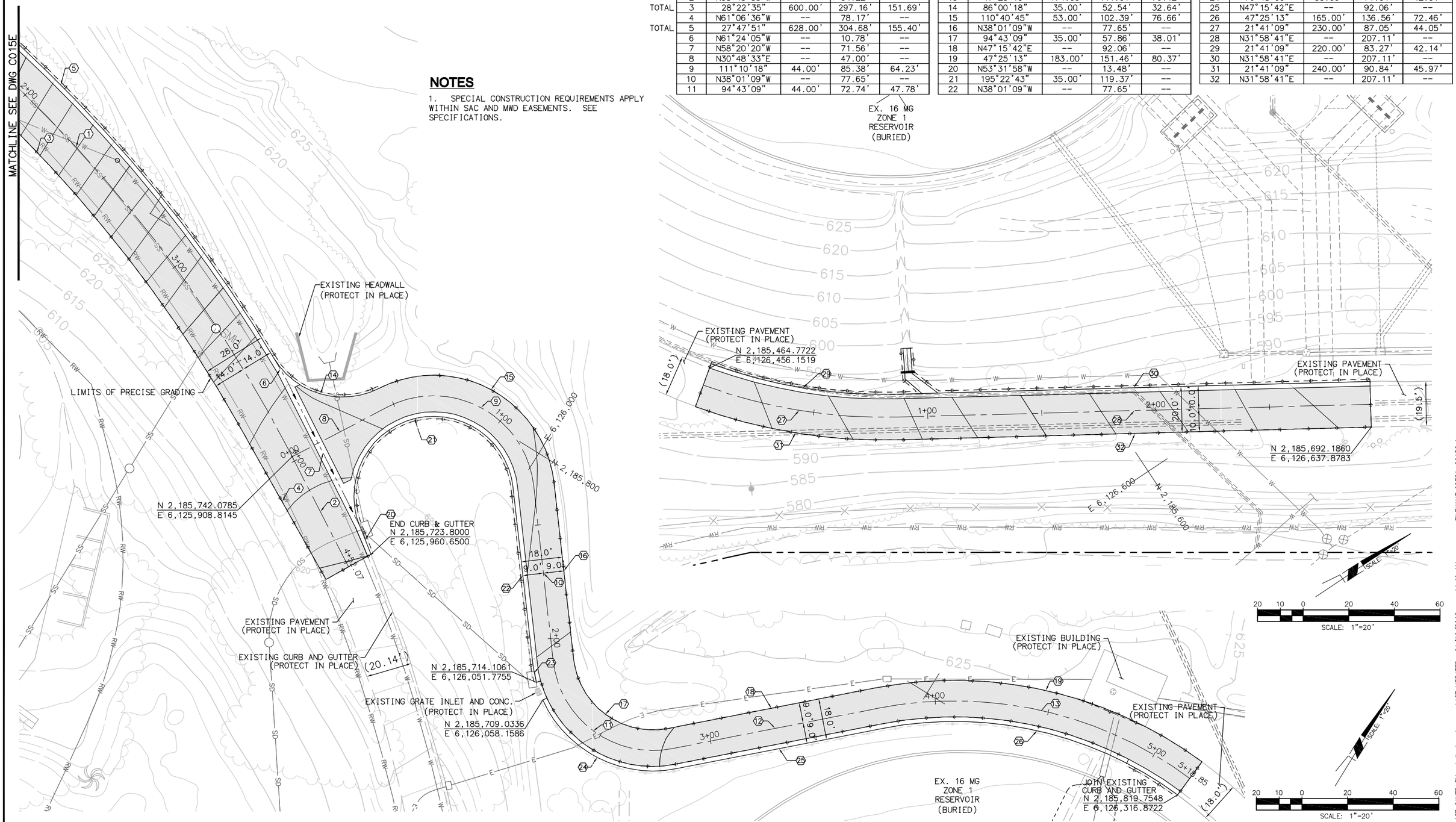

No.	DATE	REVISIONS	APPROVED

DESIGNED: JTO
DRAWN: SMC
CHECKED: JTO

RBF CONSULTING

carollo

IRVINE RANCH WATER DISTRICT

STEVEN M. COOK	RCE NO. 76947	PROJECT ENGINEER	DATE
CINDY MILLER	RCE NO. 58116	PROJECT MANAGER	DATE
PATRICIA UEMATSU	RCE NO. 36762	PRINCIPAL ENGINEER	DATE

IRVINE RANCH WATER DISTRICT
BAKER WATER TREATMENT PLANT
PROJECT NO. 11218

HORIZONTAL CONTROL PLAN
ACCESS ROAD
AREA 2

DRAWING
C015G
SHEET
62 OF **632**

FILENAME: 6232A-C015G.dwg LAST UPDATED: 01/10/2012 11:49 AM LAST SAVED BY: mkallenbaugh

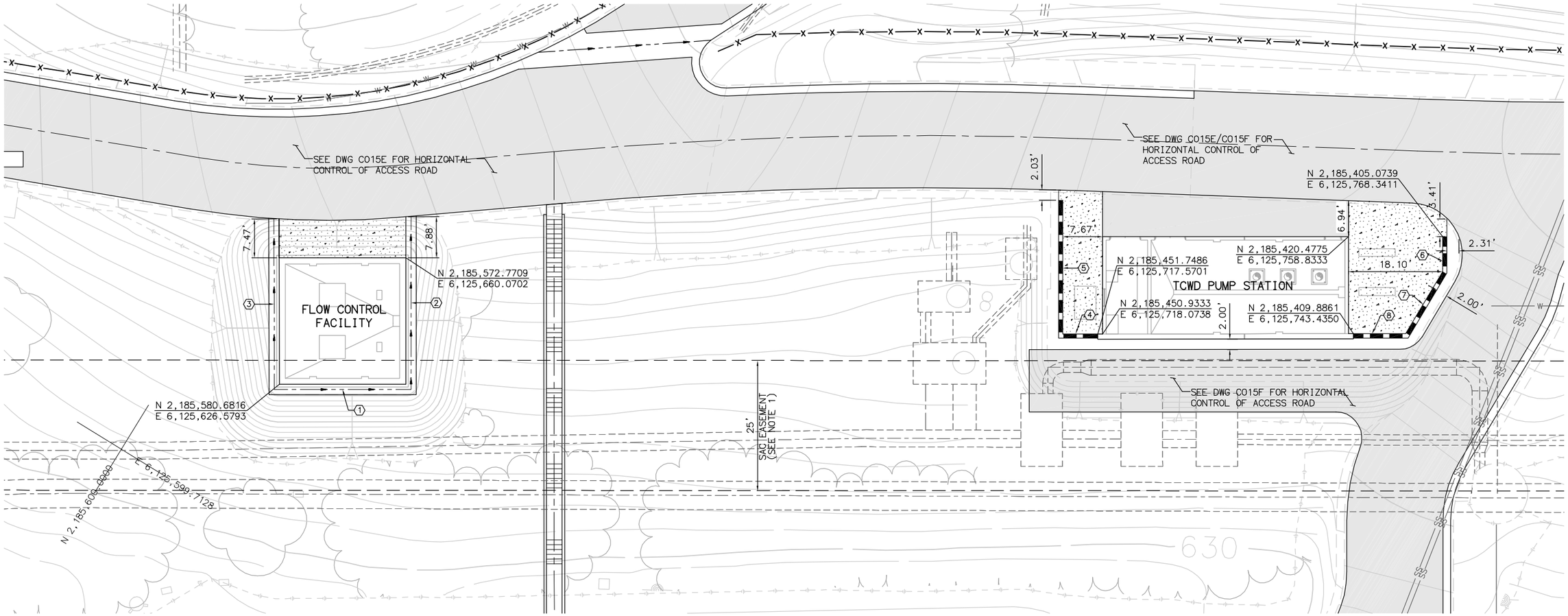

NOTES

1. SPECIAL CONSTRUCTION REQUIREMENTS APPLY WITHIN SAC AND MWD EASEMENTS. SEE SPECIFICATIONS.

LINE/CURVE DATA TABLE				
NO	BEARING/DELTA	RADIUS	LENGTH	TANGENT
1	N31°42'36"W	--	26.33'	--
2	N58°17'24"E	--	33.30'	--
3	N58°17'24"E	--	32.87'	--
4	N31°42'36"W	--	6.74'	--
5	N58°17'24"E	--	25.66'	--
6	N58°17'24"E	--	6.75'	--
7	N89°08'07"E	--	13.88'	--
8	N31°42'36"W	--	10.07'	--

SCALE: 1"=10'

10 5 0 10 20 30

SCALE: 1"=10'

LAST SAVED BY: scook LAST UPDATED: 01/16/2012 04:24 PM FILENAME: 6232A-C016.dwg

No.	DATE	REVISIONS	APPROVED

DESIGNED: JTO
DRAWN: SMC
CHECKED: JTO

RBF CONSULTING

carollo

IRVINE RANCH WATER DISTRICT

STEVEN M. COOK	RCE NO. 76947	PROJECT ENGINEER	DATE
CINDY MILLER	RCE NO. 58116	PROJECT MANAGER	DATE
PATRICIA UEMATSU	RCE NO. 36762	PRINCIPAL ENGINEER	DATE

IRVINE RANCH WATER DISTRICT
BAKER WATER TREATMENT PLANT
PROJECT NO. 11218

HORIZONTAL CONTROL PLAN
FLOW CONTROL FACILITY
AREA 2

DRAWING C016

SHEET 63 OF 632

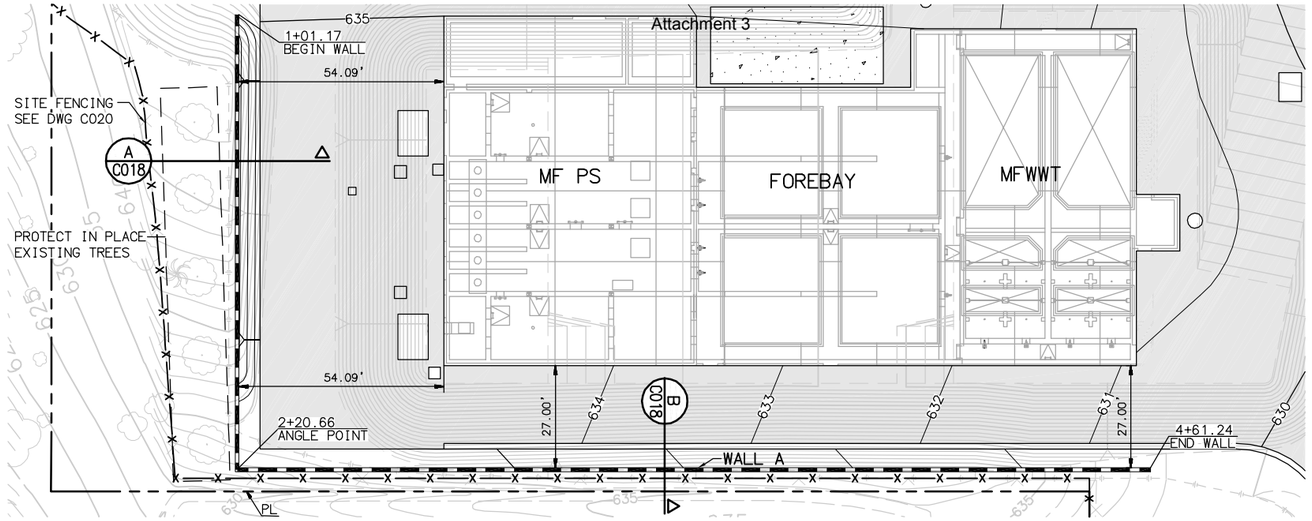

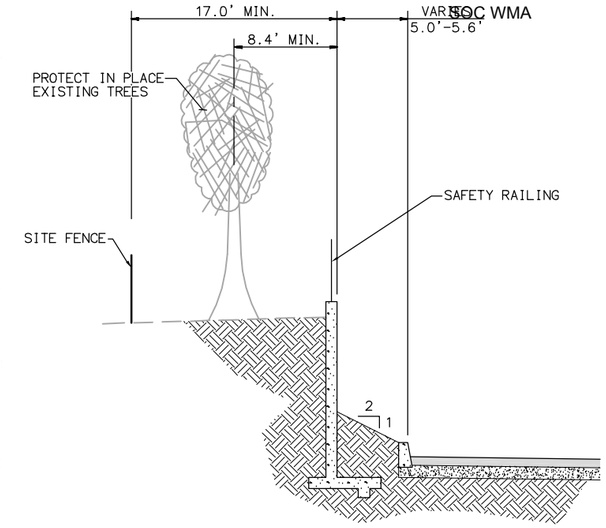

A C018 CROSS SECTION A
SCALE: NTS

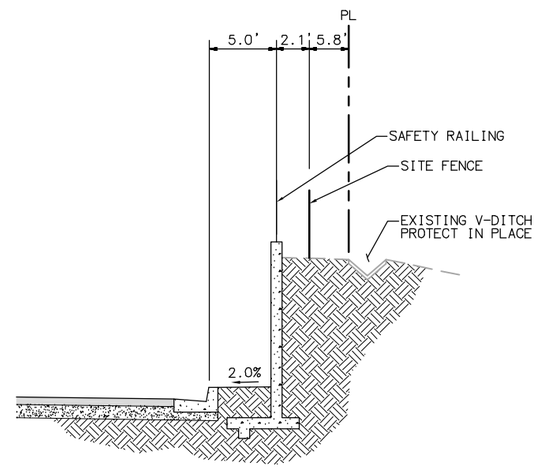

B C018 CROSS SECTION B
SCALE: NTS

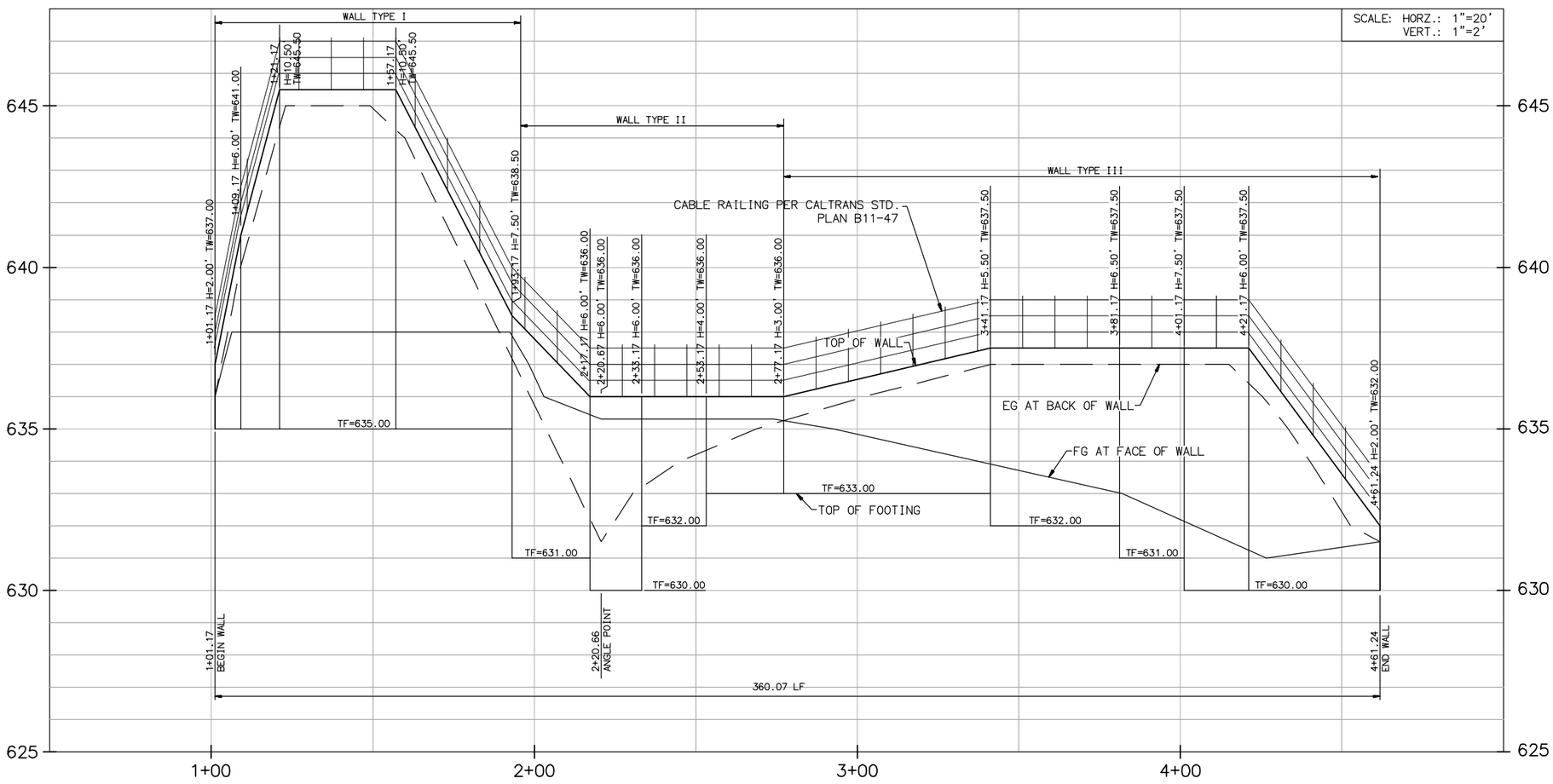

WALL A

SEE DWG C014 FOR HORIZONTAL CONTROL

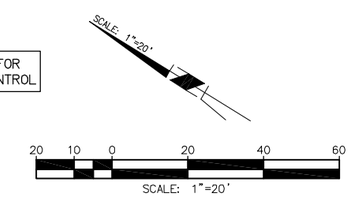

LAST SAVED BY: scook LAST UPDATED: 01/09/2012 11:52 AM FILENAME:6232A-C018.dwg

No.	DATE	REVISIONS	APPROVED

DESIGNED: JTO
DRAWN: SMC
CHECKED: JTO

RBF CONSULTING

carollo

IRVINE RANCH WATER DISTRICT

STEVEN M. COOK	RCE NO. 76947	PROJECT ENGINEER	DATE
CINDY MILLER	RCE NO. 58116	PROJECT MANAGER	DATE
PATRICIA UEMATSU	RCE NO. 36762	PRINCIPAL ENGINEER	DATE

IRVINE RANCH WATER DISTRICT
BAKER WATER TREATMENT PLANT
PROJECT NO. 11218

RETAINING WALL PLAN & PROFILE FOREBAY

DRAWING **C018**

SHEET **65** OF **632**

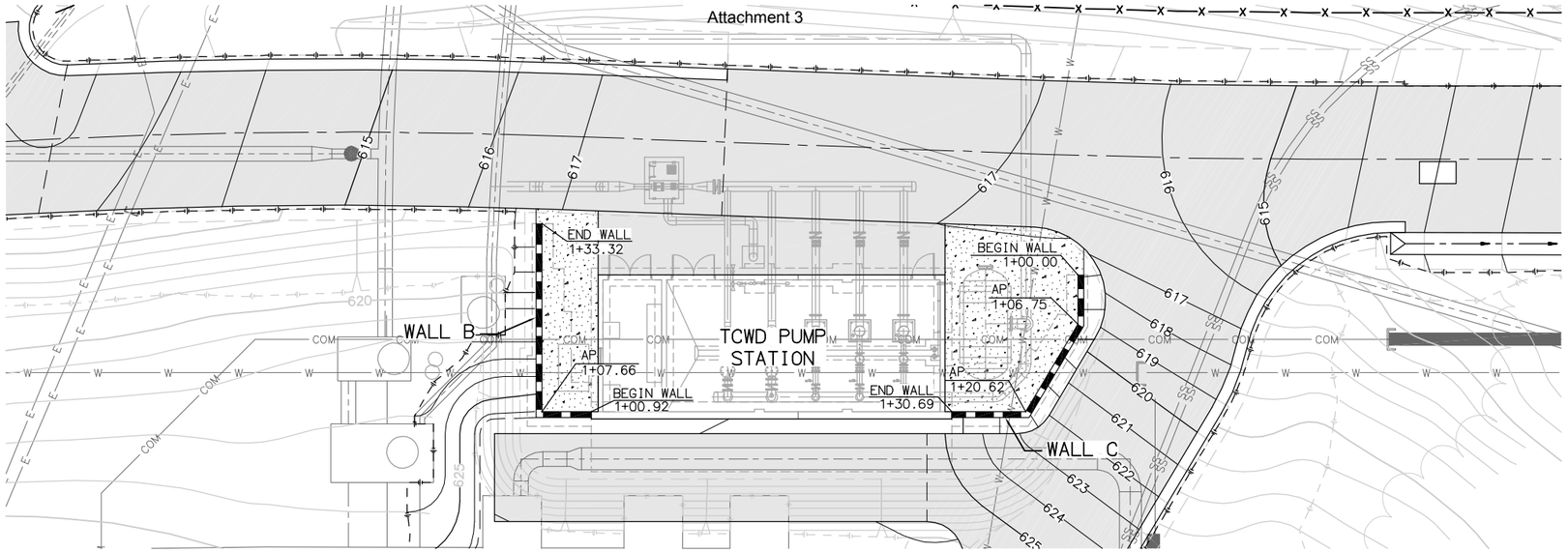

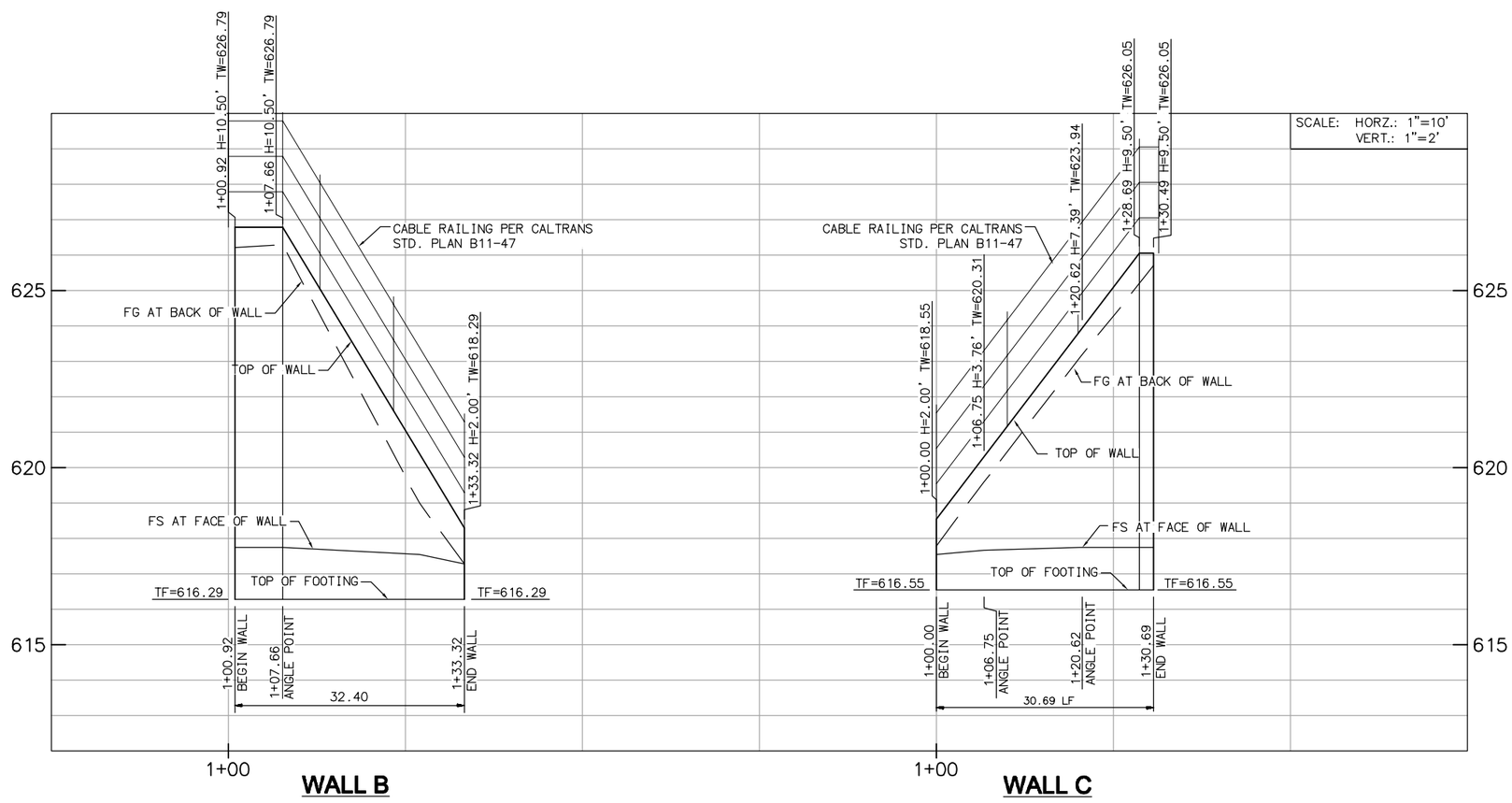

SEE DWG C016 FOR HORIZONTAL CONTROL

LAST SAVED BY: scook LAST UPDATED: 01/16/2012 11:47 AM FILENAME: 6232A-C019A.dwg

No.	DATE	REVISIONS	APPROVED

DESIGNED: JTO
DRAWN: SMC
CHECKED: JTO

RBF CONSULTING

carollo

IRVINE RANCH WATER DISTRICT

STEVEN M. COOK	RCE NO. 76947	PROJECT ENGINEER	DATE
CINDY MILLER	RCE NO. 58116	PROJECT MANAGER	DATE
PATRICIA UEMATSU	RCE NO. 36762	PRINCIPAL ENGINEER	DATE

IRVINE RANCH WATER DISTRICT
BAKER WATER TREATMENT PLANT
PROJECT NO. 11218

RETAINING WALL
PLAN & PROFILE
TCWD PUMP STATION

DRAWING
C019A
SHEET
66 OF **632**

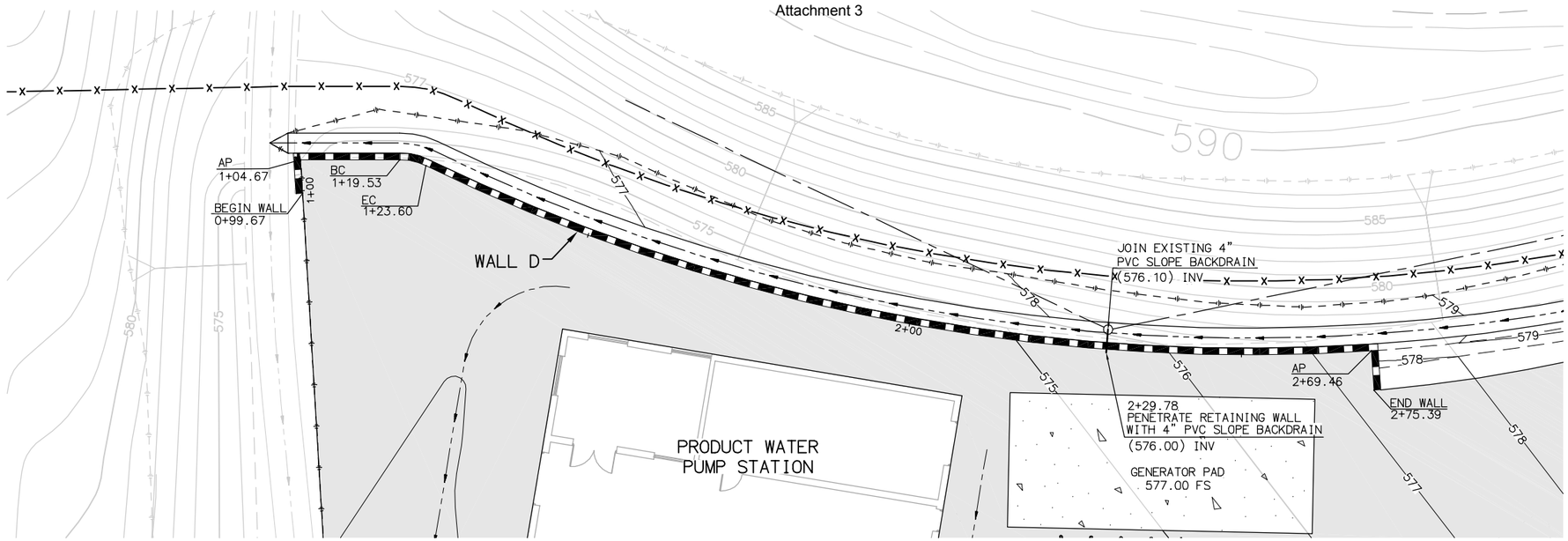

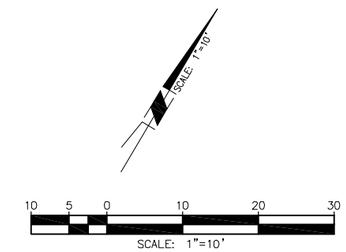

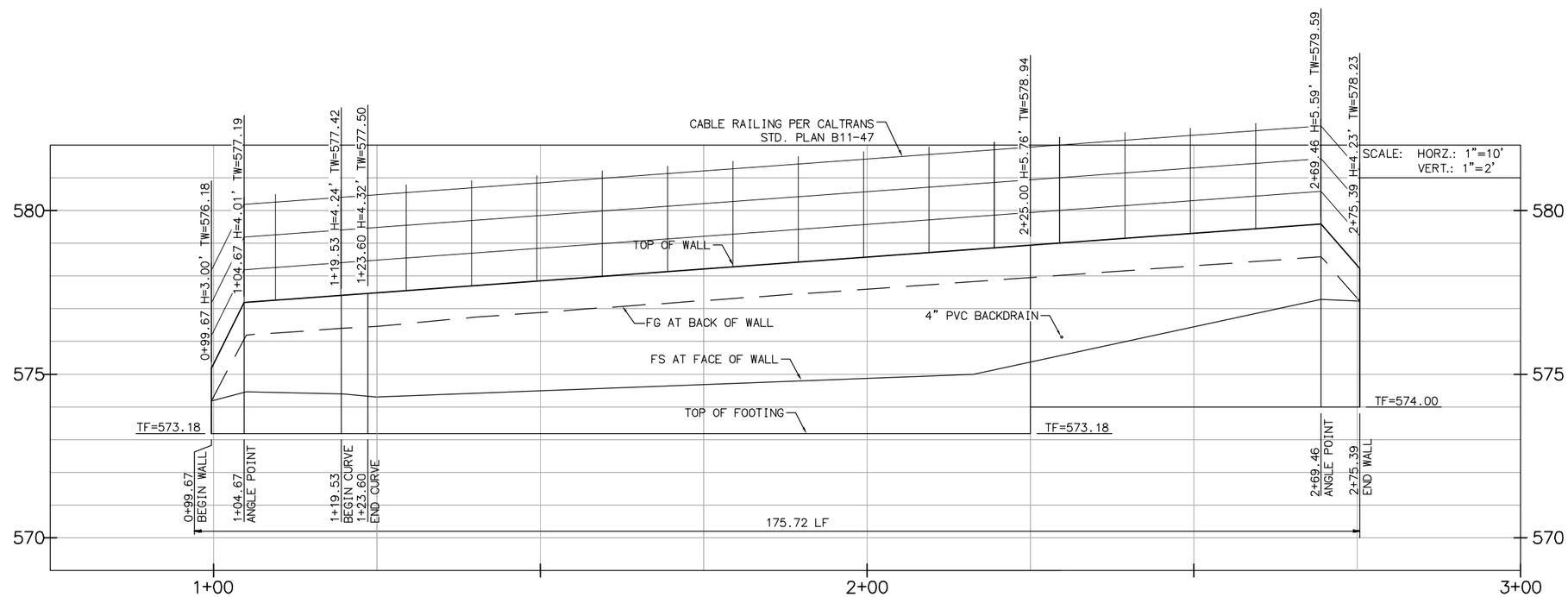

WALL D

SEE DWG C017 FOR HORIZONTAL CONTROL

LAST SAVED BY: scook LAST UPDATED: 01/09/2012 12:00 PM FILENAME: 6232A-C019B.dwg

No.	DATE	REVISIONS	APPROVED

DESIGNED: JTO
DRAWN: SMC
CHECKED: JTO

RBF CONSULTING | carollo | IRVINE RANCH WATER DISTRICT

STEVEN M. COOK	RCE NO. 76947	PROJECT ENGINEER	DATE
CINDY MILLER	RCE NO. 58116	PROJECT MANAGER	DATE
PATRICIA UEMATSU	RCE NO. 36762	PRINCIPAL ENGINEER	DATE

IRVINE RANCH WATER DISTRICT
BAKER WATER TREATMENT PLANT
PROJECT NO. 11218

RETAINING WALL PLAN & PROFILE PRODUCT WATER PUMP STATION

DRAWING **C019B**

SHEET **67** OF **632**

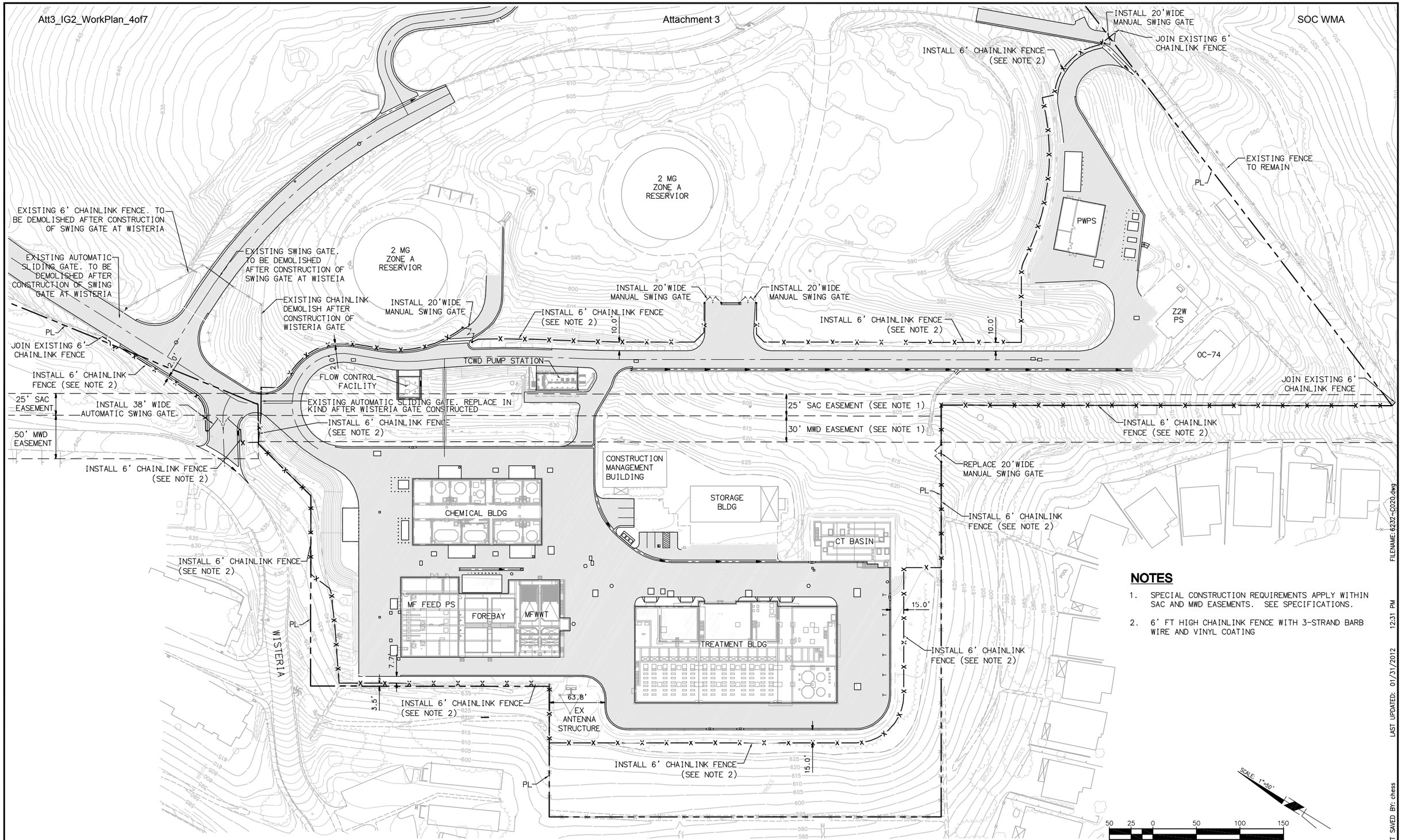

NOTES

1. SPECIAL CONSTRUCTION REQUIREMENTS APPLY WITHIN SAC AND MWD EASEMENTS. SEE SPECIFICATIONS.
2. 6' FT HIGH CHAINLINK FENCE WITH 3-STRAND BARB WIRE AND VINYL COATING

FILENAME: 6232-C020.dwg

LAST UPDATED: 01/31/2012 12:31 PM

LAST SAVED BY: chess

No.	DATE	REVISIONS	APPROVED

DESIGNED: SMC
DRAWN: SMC
CHECKED: JTO

RBF CONSULTING

carollo

IRVINE RANCH WATER DISTRICT

STEVEN M. COOK	RCE NO. 76947	PROJECT ENGINEER	DATE
CINDY MILLER	RCE NO. 58116	PROJECT MANAGER	DATE
PATRICIA UEMATSU	RCE NO. 36762	PRINCIPAL ENGINEER	DATE

IRVINE RANCH WATER DISTRICT
BAKER WATER TREATMENT PLANT
PROJECT NO. 11218

SITE FENCING AND GATE PLAN

DRAWING
C020

SHEET
68 OF **632**

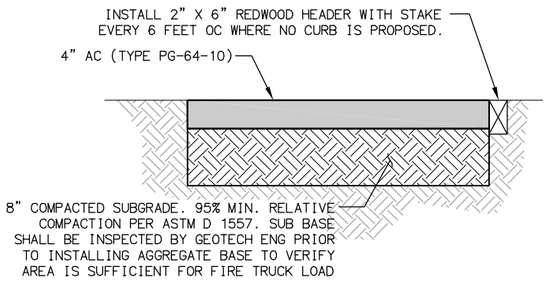

ASPHALT CONCRETE PAVING SECTION (1 / –)

N.T.S.

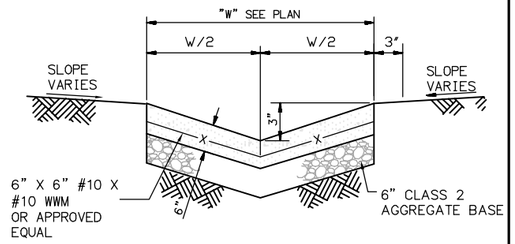

CONCRETE SWALE DETAIL (2 / –)

N.T.S.

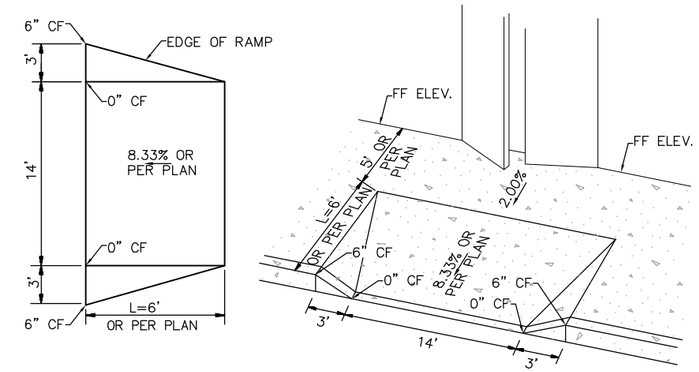

REINFORCING NOTE:
#4 @ 12 EACH WAY 3" CLEAR FROM TOP & FROM BOTTOM

CONCRETE RAMPS AT ENTRANCES (3 / –)

N.T.S.

NOT USED (4 / –)

N.T.S.

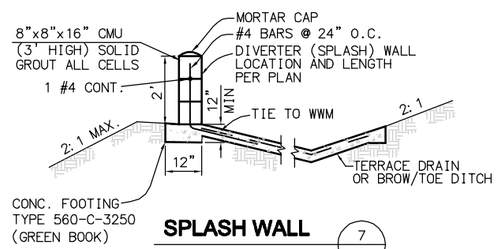

SPLASH WALL (7 / –)

N. T. S.

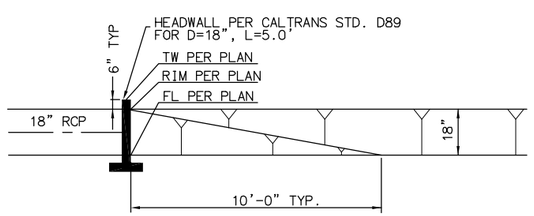

PROFILE

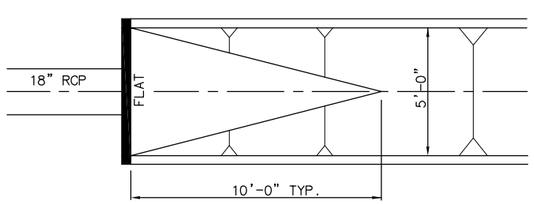

TRANSITION FROM STD. TERRACE DRAIN TO VERTICAL WALL SIDES AT HEADWALL

PLAN

TERRACE DRAIN TO PIPE TRANSITION (5 / –)

N. T. S.

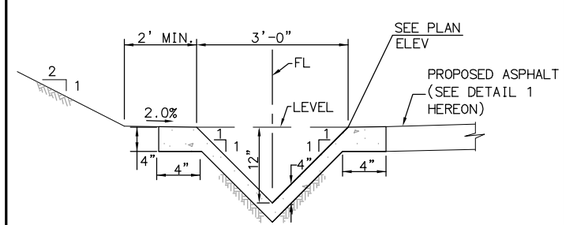

NOTE:

GROUND TO BE PRE-WETTED TO THE SATISFACTION OF THE GRADING INSPECTOR PRIOR TO PLACEMENT OF CONCRETE.

CONCRETE "V" DITCH (6 / –)

N. T. S.

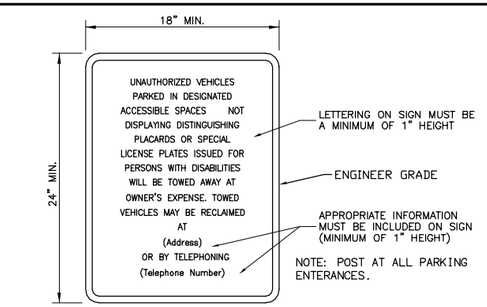

WARNING SIGN DETAIL – MUTCD R100B(CA)

NOT TO SCALE

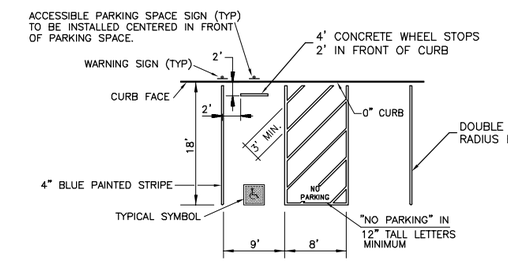

26 VAN ACCESSIBLE PARKING SPACE

NOT TO SCALE

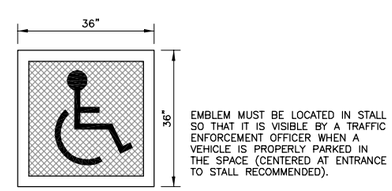

EMBLEM MUST BE LOCATED IN STALL SO THAT IT IS VISIBLE BY A TRAFFIC ENFORCEMENT OFFICER WHEN A VEHICLE IS PROPERLY PARKED IN THE SPACE (CENTERED AT ENTRANCE TO STALL RECOMMENDED).

ACCESSIBLE PARKING SPACE STRIPING DETAIL

NOT TO SCALE

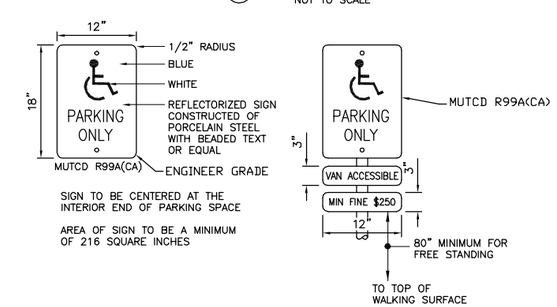

ACCESSIBLE PARKING SPACE SIGNAGE DETAIL

NOT TO SCALE

VAN ACCESSIBLE PARKING STALL AND SIGNAGE (8 / –)

N. T. S.

FILENAME: 6232A-C021.dwg

LAST UPDATED: 01/09/2012 05:56 PM

LAST SAVED BY: mkallenbaugh

No.	DATE	REVISIONS	APPROVED

DESIGNED: SMC
DRAWN: SMC
CHECKED: JTO

RBF CONSULTING

carollo

IRVINE RANCH WATER DISTRICT

STEVEN M. COOK	RCE NO. 76947	PROJECT ENGINEER	DATE
CINDY MILLER	RCE NO. 58116	PROJECT MANAGER	DATE
PATRICIA UEMATSU	RCE NO. 36762	PRINCIPAL ENGINEER	DATE

IRVINE RANCH WATER DISTRICT
BAKER WATER TREATMENT PLANT
PROJECT NO. 11218

CIVIL DETAILS I

DRAWING C021

SHEET 69 OF 632

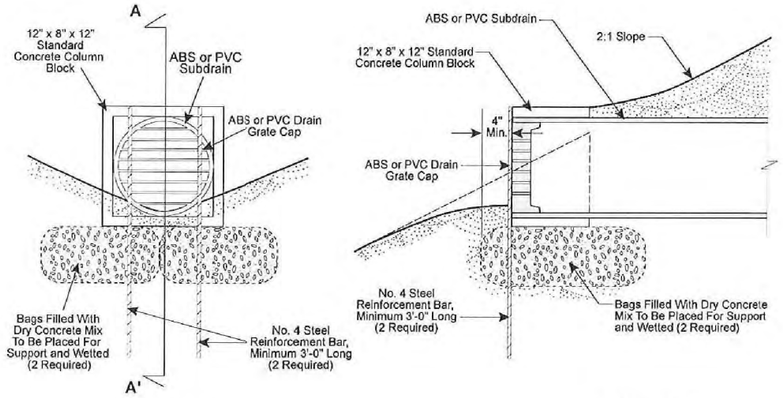

Elevation
No Scale

Section A-A'
No Scale

SUBDRAIN OUTLET MARKER FOR 6" AND 8" PIPES

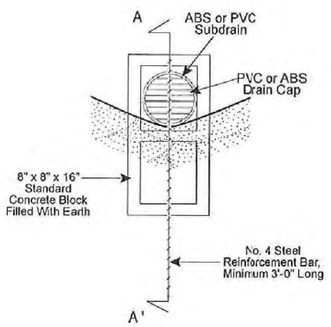

Elevation
No Scale

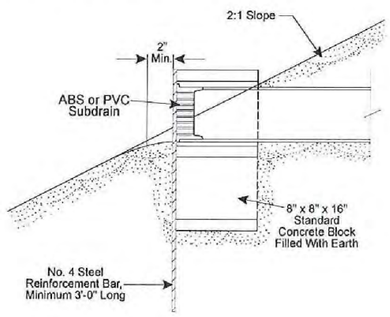

Section A-A'
No Scale

SUBDRAIN OUTLET MARKER FOR 4" PIPE

GMU GEOTECHNICAL, INC.

TYPICAL SUBDRAIN OUTLET DETAIL

Plate

P30-1/1/2002

SUBDRAIN OUTLET (1 / –)
N.T.S.

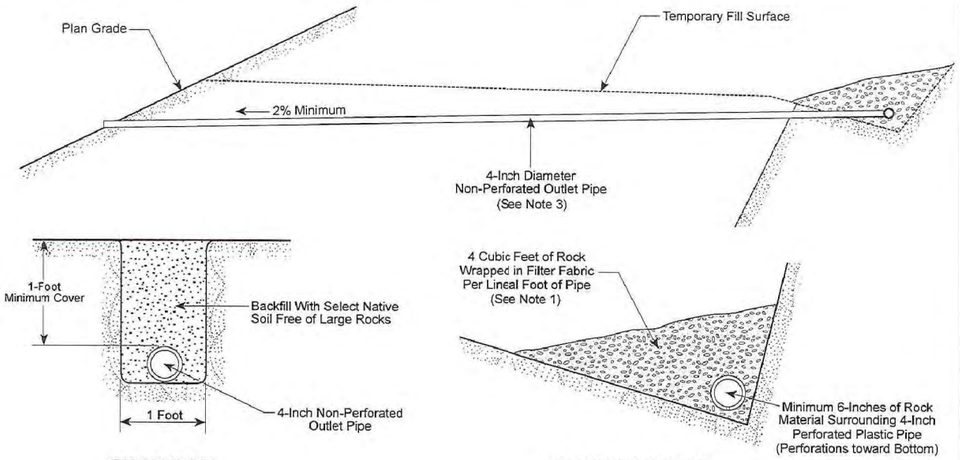

OUTLET PIPE
No Scale

COLLECTOR SYSTEM
No Scale

Notes:
1. Rock to be clean 3/4-inch hard rock approved by GMU. Alternate rock sizes may be approved by GMU on a case by case basis. Filter fabric as a minimum should meet the requirements of Mirafi 140N and should be approved by GMU.
2. Pipe to meet minimum requirements of PVC Schedule 40 pipe (ASTM D1785).
3. Outlet pipes to be constructed such that significant pipe deformation does not occur (i.e. placed in trench, etc.).
4. All dimensions and locations are approximate.
5. Drawing is not to scale.

GMU GEOTECHNICAL, INC.

TYPICAL BACKDRAIN TYPE SUBDRAIN

Plate

P31-6/3/2004

BACKDRAIN (2 / –)
N.T.S.

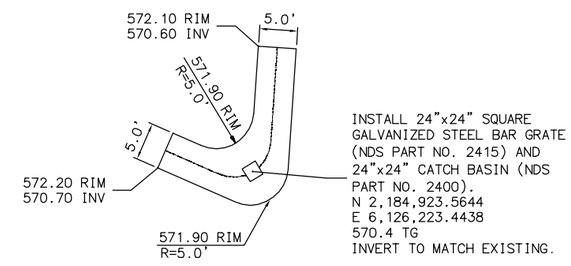

TERRACE DRAIN OUTLET STRUCTURE (3 / –)
N.T.S.

FILENAME: 6232A-C021A.dwg

LAST UPDATED: 01/09/2012 05:30 PM

LAST SAVED BY: mkallenbaugh

No.	DATE	REVISIONS	APPROVED

DESIGNED: SMC
DRAWN: SMC
CHECKED: JTO

RBF CONSULTING

carollo

IRVINE RANCH WATER DISTRICT

STEVEN M. COOK	RCE NO. 76947	PROJECT ENGINEER	DATE
CINDY MILLER	RCE NO. 58116	PROJECT MANAGER	DATE
PATRICIA UEMATSU	RCE NO. 36762	PRINCIPAL ENGINEER	DATE

IRVINE RANCH WATER DISTRICT
BAKER WATER TREATMENT PLANT
PROJECT NO. 11218

CIVIL DETAILS II

DRAWING C021A

SHEET 70 OF 632

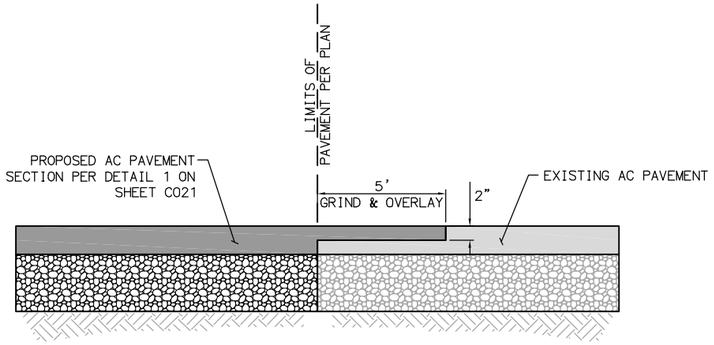

ASPHALT PAVEMENT JOIN DETAIL (1 / –)
N.T.S.

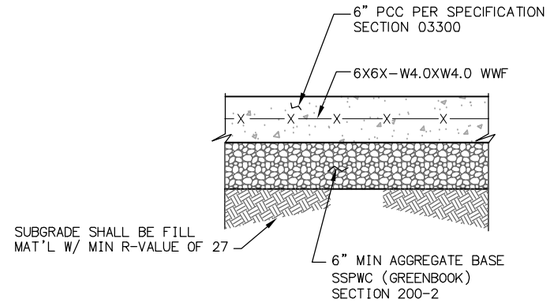

NOTES:
CONCRETE & BASE THICKNESS TO BE VERIFIED AND CONFIRMED BY THE SOIL ENGINEER.

JOINTS TO BE PLACED PER SSPWC 302-6 AND CALTRANS STANDARD A35A.

CONCRETE PAVING SECTION (2 / –)
N.T.S.

NOT USED (3 / –)
N.T.S.

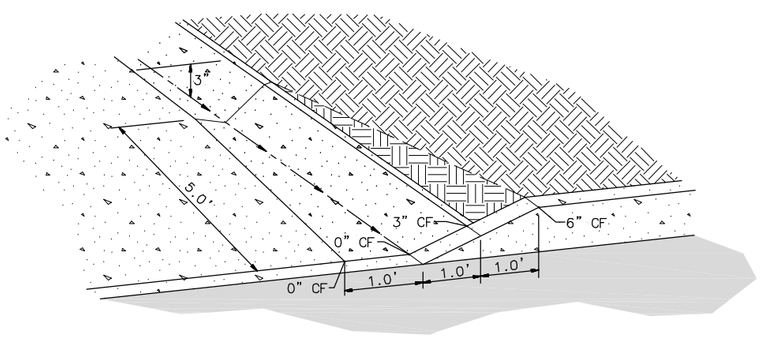

DRAINAGE SWALE AND CURB TRANSITION DETAIL (4 / –)
N.T.S.

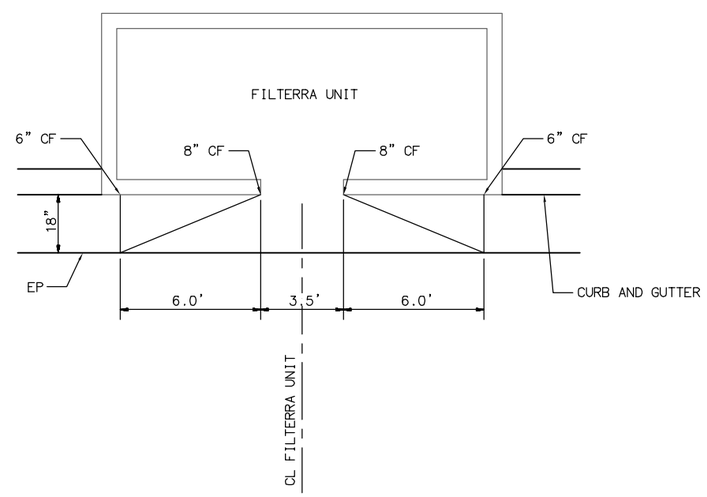

LOCAL DEPRESSION DETAIL (5 / –)
N.T.S.

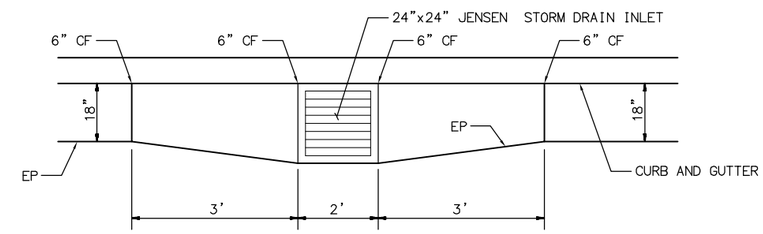

GUTTER TRANSITION (6 / –)
N.T.S.

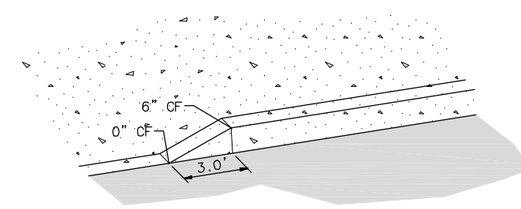

CURB TRANSITION (7 / –)
N.T.S.

No.	DATE	REVISIONS	APPROVED

DESIGNED: SMC
DRAWN: SMC
CHECKED: JTO

RBF CONSULTING

carollo

IRVINE RANCH WATER DISTRICT

STEVEN M. COOK	RCE NO. 76947	PROJECT ENGINEER	DATE
CINDY MILLER	RCE NO. 58116	PROJECT MANAGER	DATE
PATRICIA UEMATSU	RCE NO. 36762	PRINCIPAL ENGINEER	DATE

IRVINE RANCH WATER DISTRICT
BAKER WATER TREATMENT PLANT
PROJECT NO. 11218

CIVIL DETAILS III

DRAWING
C022
SHEET
71 OF 632

FILENAME: 6232A-C022.dwg
LAST UPDATED: 01/10/2012 12:14 PM
LAST SAVED BY: mkallenbaugh

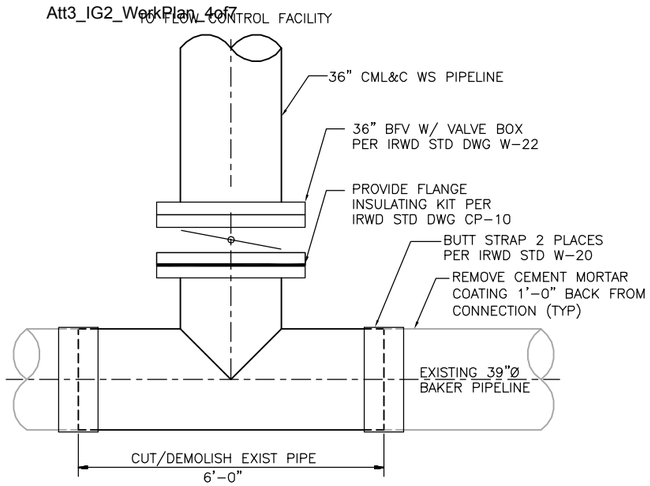

NOTES:

1. CONTRACTOR SHALL VERIFY EXIST PIPE LOCATION AND MATERIAL PRIOR TO FABRICATION.
2. COORDINATE WITH CONSTRUCTION MANAGER TO ISOLATE SERVICE PRIOR TO CONSTRUCTION.
3. THRUST BLOCK WILL BE REQUIRED IF BAKER PIPELINE IS NOT AWWA C200 WSP,

STEEL PIPE CONNECTION

N.T.S. — 1 / C028

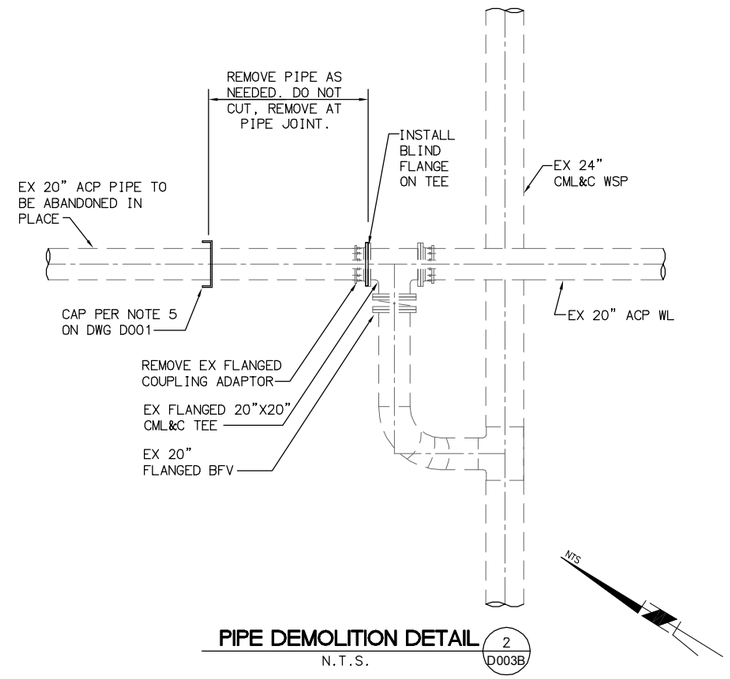

PIPE DEMOLITION DETAIL

N.T.S. — 2 / D003B

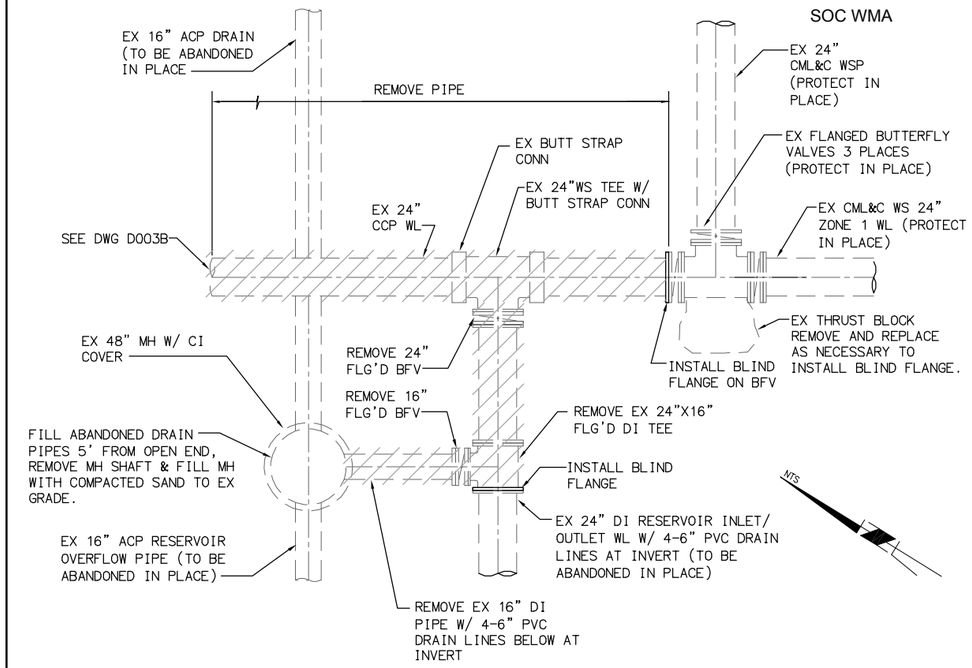

PIPE DEMOLITION DETAIL

N.T.S. — 3 / D003B

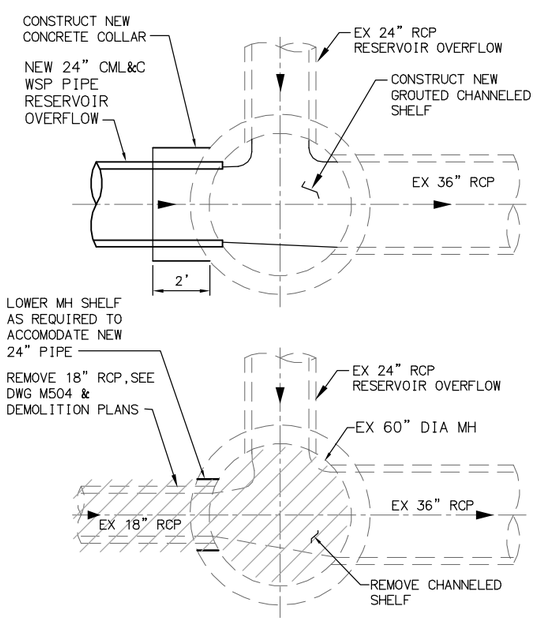

RESERVOIR OVERFLOW MH MODIFICATIONS STA 10+00.00

N.T.S. — 4 / C030

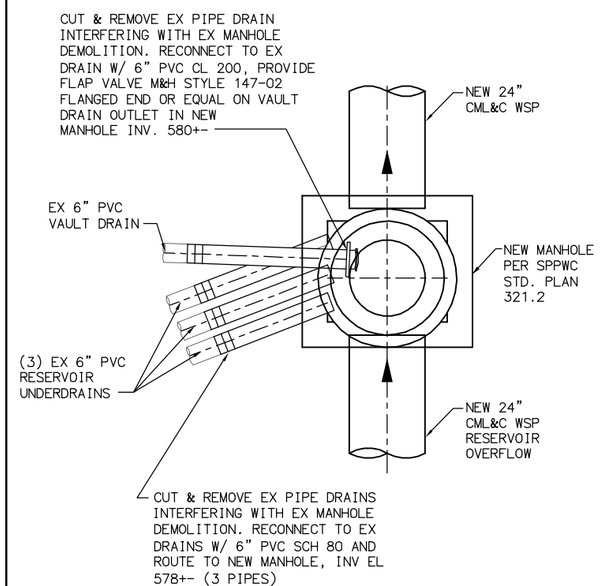

RESERVOIR OVERFLOW MH STA 10+36.00

N.T.S. — 5 / C030

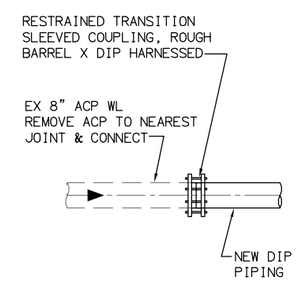

8" DW PIPELINE CONNECTION STA 9+45.00

N.T.S. N.T.S. — 6 / D002B

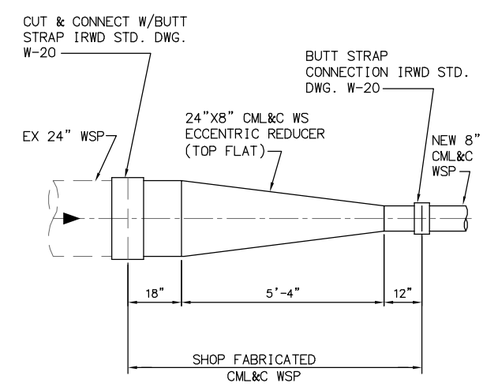

8" RAW PIPELINE CONNECTION STA 10+00.00

N.T.S. — 7 / D002B

FILENAME: 6232A-C023.dwg
LAST UPDATED: 01/21/2012 11:08 AM
LAST SAVED BY: chess

No.	DATE	REVISIONS	APPROVED

DESIGNED: WFM
DRAWN: DDT
CHECKED: CLM

RBF CONSULTING — carollo — IRVINE RANCH WATER DISTRICT

WILLIAM F. McINERNEY	RCE NO. 16084	PROJECT ENGINEER	DATE
CINDY MILLER	RCE NO. 58116	PROJECT MANAGER	DATE
PATRICIA UEMATSU	RCE NO. 36762	PRINCIPAL ENGINEER	DATE

IRVINE RANCH WATER DISTRICT
BAKER WATER TREATMENT PLANT
PROJECT NO. 11218

PIPING DETAILS I

DRAWING C023

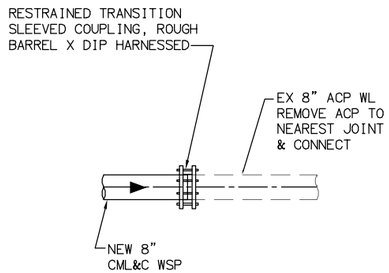

8" RAW PIPELINE CONNECTION STA 11+43

N.T.S. — 1 / D002B

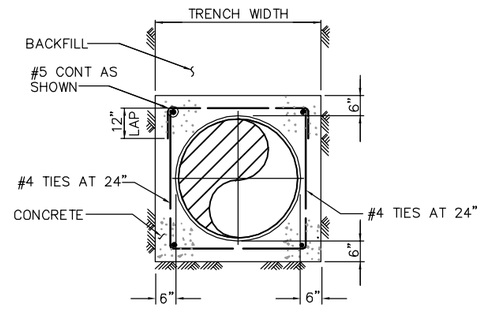

REINFORCED CONCRETE ENCASEMENT DETAIL

N.T.S. — 2 / –

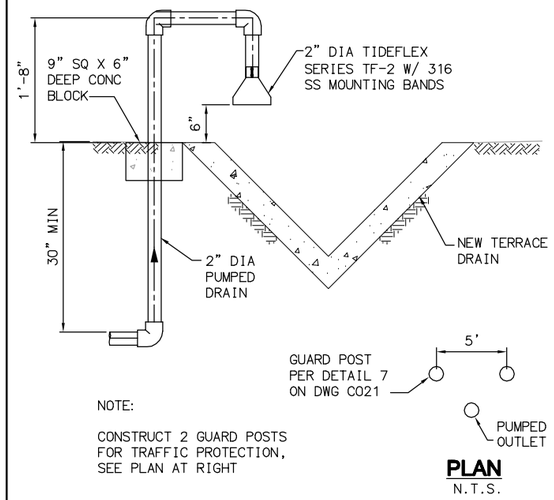

PUMPED DRAIN OUTLET DETAIL

N.T.S. — 3 / C029

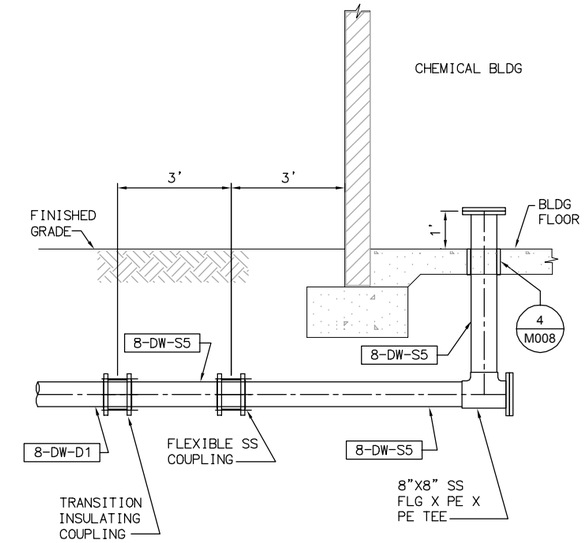

CHEMICAL BUILDING FIRE SPRINKLER RISER

N.T.S. — 4 / -

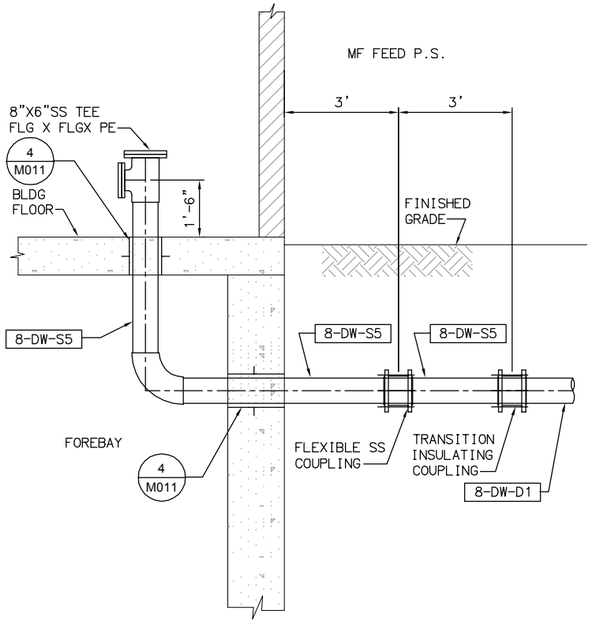

MF FEED P.S. FIRE SPRINKLER RISER

N.T.S. — 5 / -

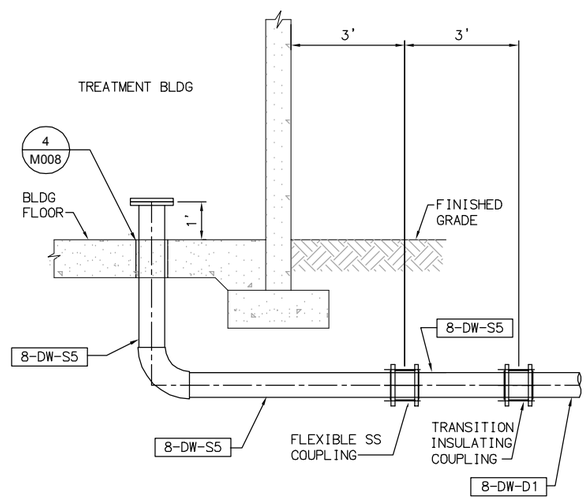

TREATMENT BUILDING FIRE SPRINKLER RISER

N.T.S. — 6 / -

NOT USED

N.T.S. — 7 / -

NOT USED

N.T.S. — 8 / -

LAST SAVED BY: ewalker LAST UPDATED: 01/23/2012 03:33 PM FILENAME: 6232A-C024.dwg

No.	DATE	REVISIONS	APPROVED

DESIGNED: CBH
DRAWN: DDT
CHECKED: CLM

RBF CONSULTING — carollo — IRVINE RANCH WATER DISTRICT

COREY HESS	RCE NO. 68499	PROJECT ENGINEER	DATE
CINDY MILLER	RCE NO. 58116	PROJECT MANAGER	DATE
PATRICIA UEMATSU	RCE NO. 36762	PRINCIPAL ENGINEER	DATE

IRVINE RANCH WATER DISTRICT
BAKER WATER TREATMENT PLANT
PROJECT NO. 11218

PIPING DETAILS II

DRAWING C024

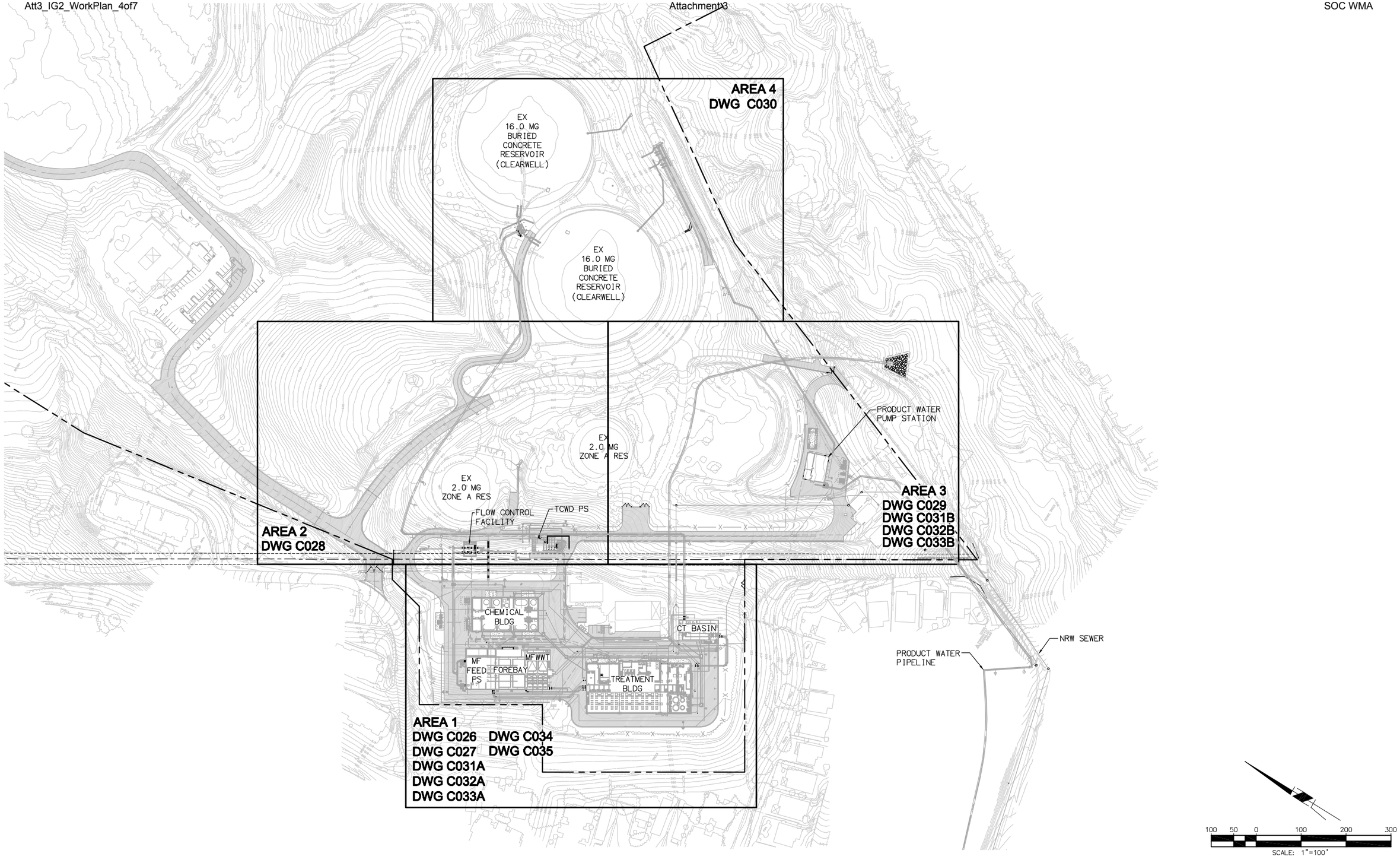

FILENAME: 6232A-C025.dwg
LAST UPDATED: 01/21/2012 11:31 AM
LAST SAVED BY: chess

No.	DATE	REVISIONS	APPROVED

DESIGNED: CBH
DRAWN: DDT
CHECKED: CLM

RBF CONSULTING

carollo

IRVINE RANCH WATER DISTRICT

COREY HESS	RCE NO. 68499	PROJECT ENGINEER	DATE
CINDY MILLER	RCE NO. 58116	PROJECT MANAGER	DATE
PATRICIA UEMATSU	RCE NO. 36762	PRINCIPAL ENGINEER	DATE

IRVINE RANCH WATER DISTRICT
BAKER WATER TREATMENT PLANT
PROJECT NO. 11218

YARD PIPING KEY MAP

DRAWING
C025
SHEET
74 OF **632**

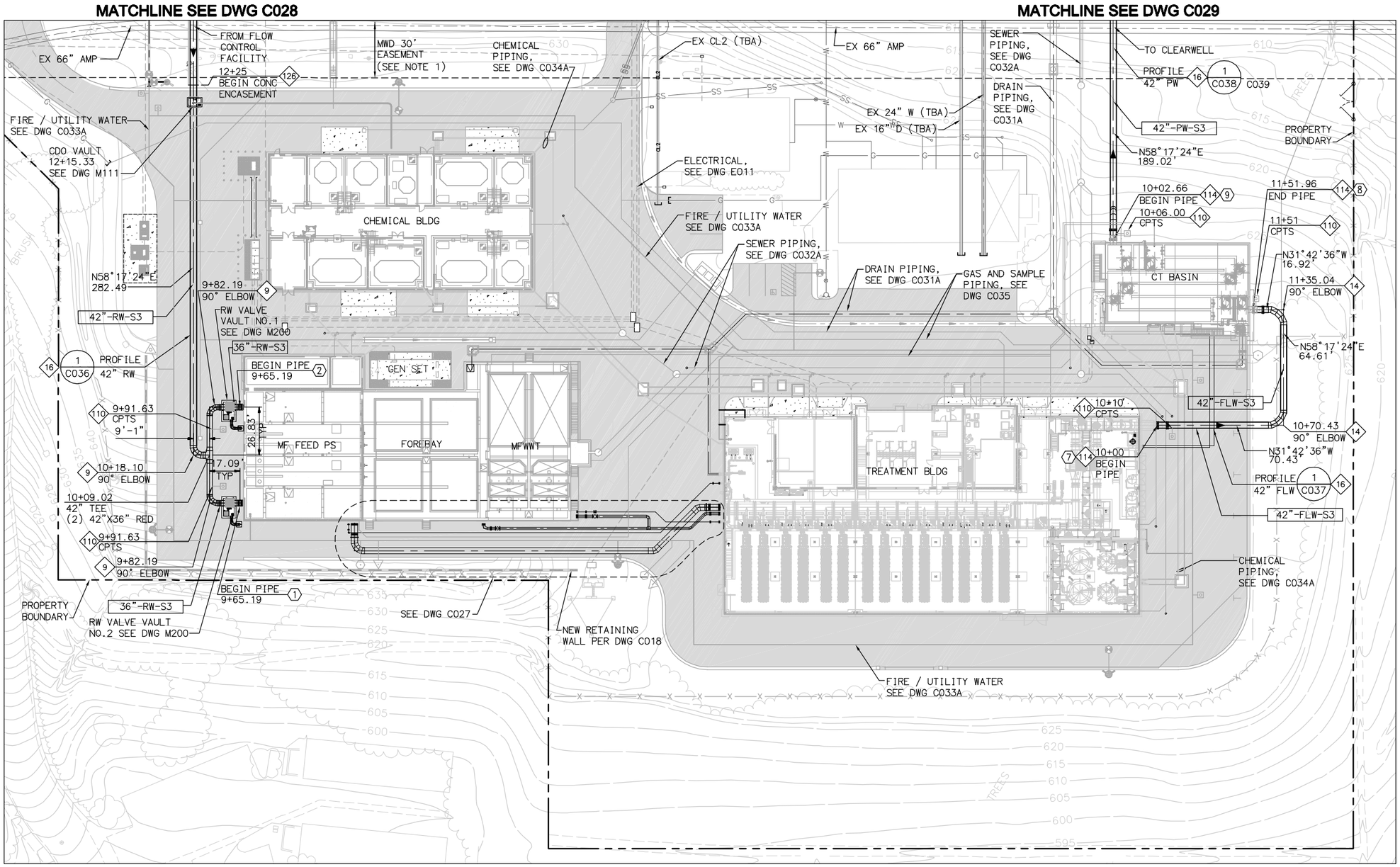

KEY NOTES

- 9 — 5 PIECE CML&C 90° FABRICATED WELDED STEEL ELBOW PER AWWA C208. R=1.5D
- 14 — 5 PIECE CML&C 90° FABRICATED WELDED STEEL ELBOW PER AWWA C208. R=2.5D
- 16 — PIPE TRENCH PER IRWD STD. DWG W-17
- 110 — INSTALL TWO WIRE TEST STATION PER IRWD STD. CP-1 AND IRWD STD G-2
- 114 — CONNECT TO MECHANICAL PIPING PER DETAIL 4 ON DWG M013
- 126 — CONCRETE ENCASE PER DETAIL 2 ON DWG C024

COORDINATE LISTING

1	N 2185428.5375 E 6125381.8627	END OF PIPE
2	N 2185456.7459 E 6125427.5218	END OF PIPE
7	N 2185015.2592 E 6125688.3991	END OF PIPE
8	N 2185003.6981 E 6125771.4991	END OF PIPE
9	N 2185090.8957 E 6125763.7571	END OF PIPE

NOTES

1. SPECIAL CONSTRUCTION REQUIREMENTS APPLY WITH SAC AND MWD EASEMENTS. SEE SPECIFICATIONS.

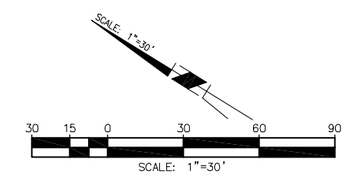

FILENAME: 6232A-C026.dwg
LAST UPDATED: 01/25/2012 02:20 PM
LAST SAVED BY: drujillo

No.	DATE	REVISIONS	APPROVED

DESIGNED: CBH
DRAWN: DDT
CHECKED: CLM

RBF CONSULTING
carollo
IRVINE RANCH WATER DISTRICT

COREY HESS	RCE NO. 68499	PROJECT ENGINEER	DATE
CINDY MILLER	RCE NO. 58116	PROJECT MANAGER	DATE
PATRICIA UEMATSU	RCE NO. 36762	PRINCIPAL ENGINEER	DATE

IRVINE RANCH WATER DISTRICT
BAKER WATER TREATMENT PLANT
PROJECT NO. 11218

YARD PIPING PLAN
WATER TREATMENT PLANT
AREA 1

DRAWING **C026**
SHEET **75** OF **632**

KEY NOTES

16 PIPE TRENCH PER I.R.W.D. STD. DWG W-17

112 INSTALL FLANGED PLUG VALVE WITH OPERATING STEM AND VALVE BOX PER IRWD STD. DWG. W-22

114 CONNECT TO MECHANICAL PIPING PER DETAIL 4 ON DWG M013

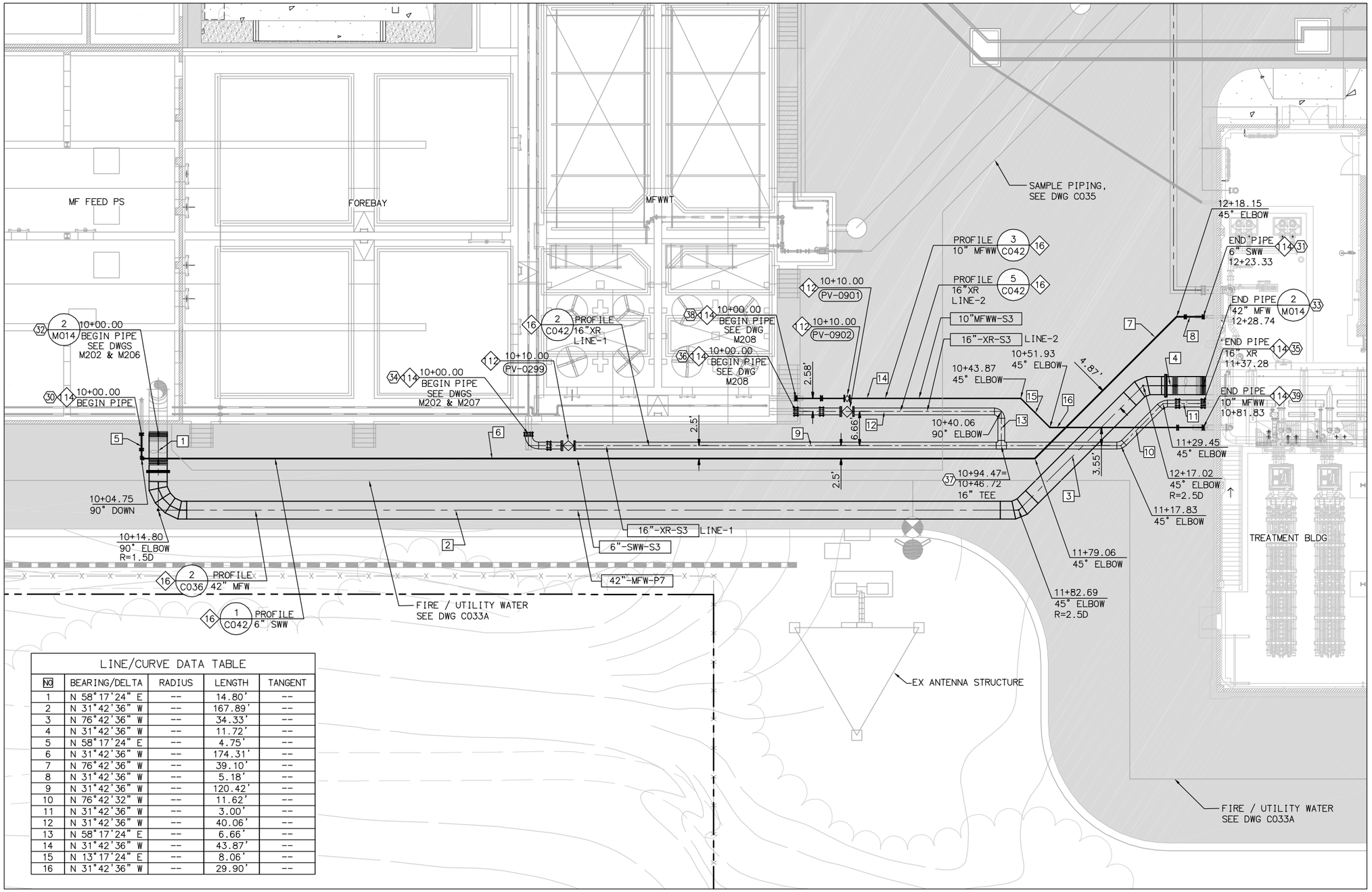

COORDINATE LISTING

30	N 2185370.7101 E 6125403.6916	END OF PIPE
31	N 2185206.5335 E 6125532.0437	END OF PIPE
32	N 2185367.943 E 6125405.4012	END OF PIPE
33	N 2185199.4741 E 6125520.6178	END OF PIPE
34	N 2185306.481 E 6125443.3762	END OF PIPE
35	N 2185197.6355 E 6125517.6421	END OF PIPE
36	N 2185264.423 E 6125474.5531	END OF PIPE
37	N 2185226.841 E 6125489.9396	END OF PIPE
38	N 2185265.7844 E 6125476.7486	END OF PIPE
39	N 2185195.1824 E 6125513.6717	END OF PIPE

LINE/CURVE DATA TABLE

NO	BEARING/DELTA	RADIUS	LENGTH	TANGENT
1	N 58°17'24" E	--	14.80'	--
2	N 31°42'36" W	--	167.89'	--
3	N 76°42'36" W	--	34.33'	--
4	N 31°42'36" W	--	11.72'	--
5	N 58°17'24" E	--	4.75'	--
6	N 31°42'36" W	--	174.31'	--
7	N 76°42'36" W	--	39.10'	--
8	N 31°42'36" W	--	5.18'	--
9	N 31°42'36" W	--	120.42'	--
10	N 76°42'32" W	--	11.62'	--
11	N 31°42'36" W	--	3.00'	--
12	N 31°42'36" W	--	40.06'	--
13	N 58°17'24" E	--	6.66'	--
14	N 31°42'36" W	--	43.87'	--
15	N 13°17'24" E	--	8.06'	--
16	N 31°42'36" W	--	29.90'	--

10 5 0 10 20 30

SCALE: 1"=10'

FILENAME: 6232A-C027.dwg

LAST UPDATED: 01/31/2012 02:47 PM

LAST SAVED BY: chess

No.	DATE	REVISIONS	APPROVED

DESIGNED: CBH

DRAWN: DDT

CHECKED: CLM

RBF CONSULTING

carollo

IRVINE RANCH WATER DISTRICT

COREY HESS	RCE NO. 68499	PROJECT ENGINEER	DATE
CINDY MILLER	RCE NO. 58116	PROJECT MANAGER	DATE
PATRICIA UEMATSU	RCE NO. 36762	PRINCIPAL ENGINEER	DATE

IRVINE RANCH WATER DISTRICT
BAKER WATER TREATMENT PLANT
PROJECT NO. 11218

YARD PIPING PLAN
RW AND MFWW PIPING
AREA 1

DRAWING C027

SHEET 76 OF 632

MATCHLINE SEE DWG C030

LINE/CURVE DATA TABLE				
NO	BEARING/DELTA	RADIUS	LENGTH	TANGENT
1	N 31°42'36" W	--	622.46'	--
2	N 13°17'24" E	--	9.35'	--
3	23°18'42"	489.00'	198.96'	100.87'
4	N 86°13'40" W	--	318.32'	--
5	N 56°24'41" E	--	111.36'	--
6	N 58°17'24" E	--	282.49'	--
7	N 31°42'36" W	--	64.31'	--
8	N 31°42'36" W	--	64.31'	--
9	N 31°42'36" W	--	6.00'	--
10	N 23°07'52" W	--	23.46'	--
11	N 31°42'36" W	--	46.00'	--
12	N 58°17'24" E	--	19.08'	--
13	N 31°42'36" W	--	7.99'	--
14	N 76°35'44" W	--	5.20'	--
15	N 58°17'24" E	--	45.14'	--
16	N 31°42'36" W	--	72.86	--
17	N 31°42'36" W	--	57.32'	--
18	N 58°17'24" E	--	28.36'	--
19	N 31°42'36" W	--	48.06'	--
20	N 58°17'24" E	--	16.05'	--

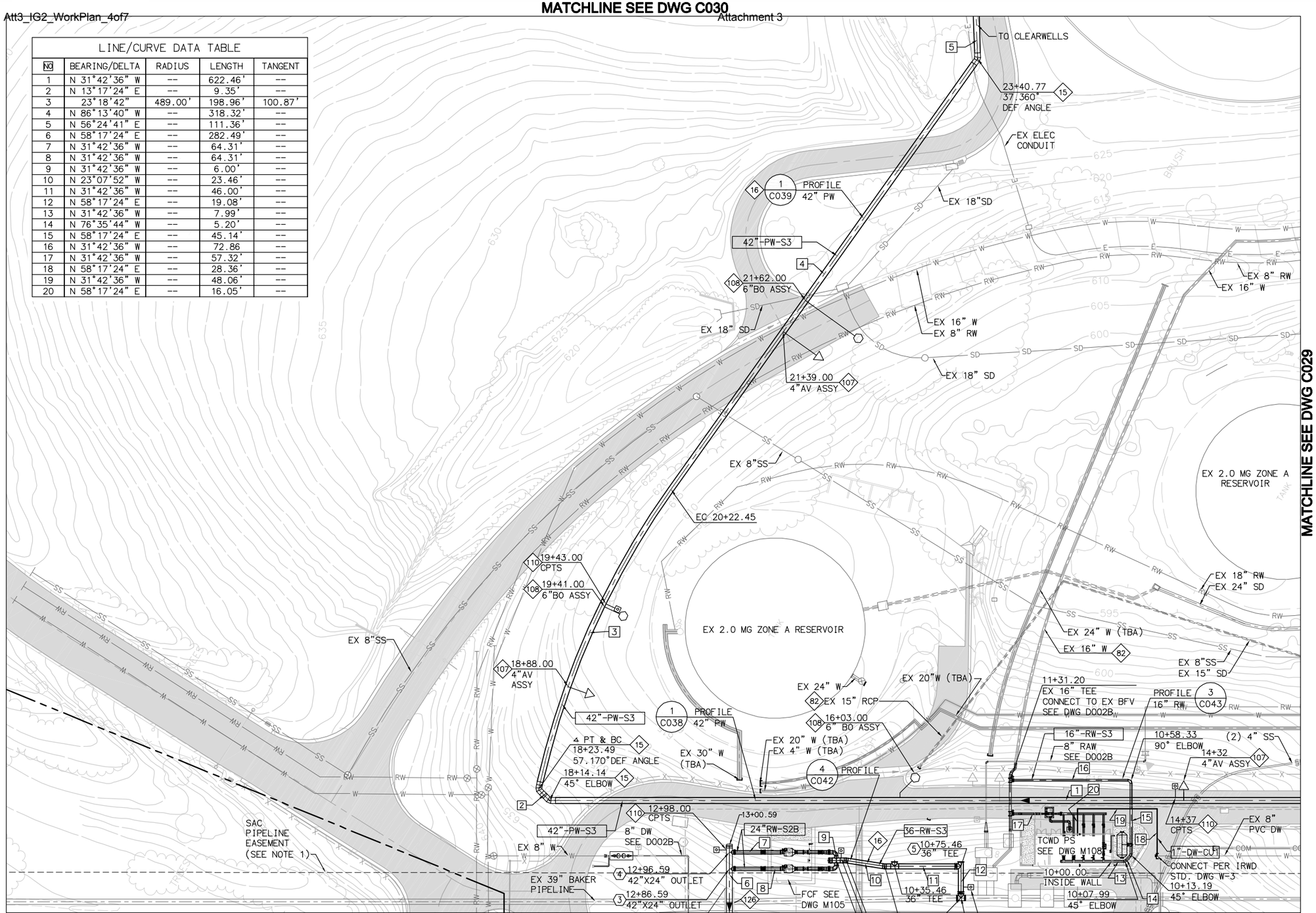

MATCHLINE SEE DWG C026

MATCHLINE SEE DWG C029

KEY NOTES

- (15) 3 PIECE CML&C FABRICATED WELDED STEEL ELBOW PER AWWA C208. R=2.5D
- (16) PIPE TRENCH PER I.R.W.D. STD. DWG W-17
- (82) PROTECT IN PLACE
- (107) INSTALL AIR AND VACUUM ASSEMBLY PER IRWD STD. W-11
- (108) INSTALL BLOWOFF ASSEMBLY PER IRWD STD. W-14 (SIZE PER PLAN, LAYOUT PER IRWD STD.)
- (110) INSTALL TWO WIRE TEST STATION PER IRWD STD. CP-1 AND IRWD STD G-2
- (126) CONCRETE ENCASE PER DETAIL 2 ON DWG C024

COORDINATE LISTING

(3)	N 2185605.9404 E 6125619.3973	END OF PIPE
(4)	N 2185611.2002 E 6125627.9023	END OF PIPE
(5)	N 2185488.0487 E 6125694.0003	36" TEE
(6)	N 2185478.0207 E 6125677.7699	END OF PIPE

NOTES

1. SPECIAL CONSTRUCTION REQUIREMENTS APPLY WITH SAC AND MWD EASEMENTS. SEE SPECIFICATIONS.

SCALE: 1"=30'

30 15 0 30 60 90

SCALE: 1"=30'

FILENAME: 6232A-C028.dwg
LAST UPDATED: 01/24/2012 01:40 PM
LAST SAVED BY: chess

No.	DATE	REVISIONS	APPROVED

DESIGNED: CBH
DRAWN: DDT
CHECKED: CLM

RBF CONSULTING
carollo
IRVINE RANCH WATER DISTRICT

COREY HESS	RCE NO. 68499	PROJECT ENGINEER	DATE
CINDY MILLER	RCE NO. 58116	PROJECT MANAGER	DATE
PATRICIA UEMATSU	RCE NO. 36762	PRINCIPAL ENGINEER	DATE

IRVINE RANCH WATER DISTRICT
BAKER WATER TREATMENT PLANT
PROJECT NO. 11218

YARD PIPING PLAN
BAKER PIPELINE, FCF AND TCWD PS
AREA 2

DRAWING C028

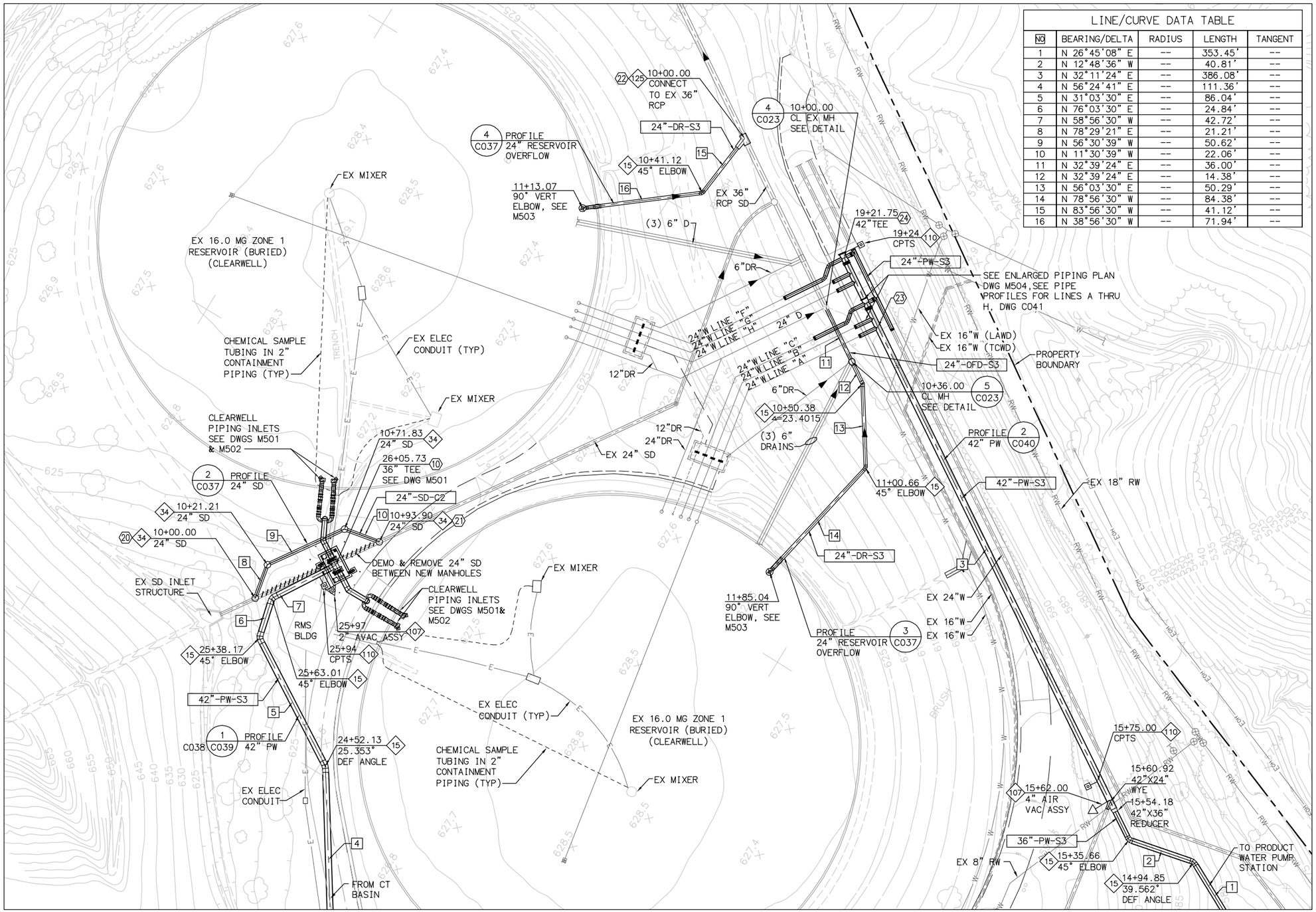

MATCHLINE SEE DWG C028

MATCHLINE SEE DWG C029

LINE/CURVE DATA TABLE				
NO	BEARING/DELTA	RADIUS	LENGTH	TANGENT
1	N 26°45'08" E	--	353.45'	--
2	N 12°48'36" W	--	40.81'	--
3	N 32°11'24" E	--	386.08'	--
4	N 56°24'41" E	--	111.36'	--
5	N 31°03'30" E	--	86.04'	--
6	N 76°03'30" E	--	24.84'	--
7	N 58°56'30" W	--	42.72'	--
8	N 78°29'21" E	--	21.21'	--
9	N 56°30'39" W	--	50.62'	--
10	N 11°30'39" W	--	22.06'	--
11	N 32°39'24" E	--	36.00'	--
12	N 32°39'24" E	--	14.38'	--
13	N 56°03'30" E	--	50.29'	--
14	N 78°56'30" W	--	84.38'	--
15	N 83°56'30" W	--	41.12'	--
16	N 38°56'30" W	--	71.94'	--

KEY NOTES

- 15 — 3 PIECE CML&C FABRICATED WELDED STEEL ELBOW PER AWWA C208. R=2.5D
- 34 — STORM DRAIN MANHOLE PER SPPWC STD. PLAN 322-2
- 107 — INSTALL AIR AND VACUUM ASSEMBLY PER IRWD STD. W-11
- 110 — INSTALL TWO WIRE TEST STATION PER IRWD STD. CP-1 AND IRWD STD G-2
- 125 — JUNCTION STRUCTURE PER SPPWC STD PLAN 331-3

COORDINATE LISTING

10	N 2185854.3112 E 6126310.7358	36" TEE
20	N 2185884.8938 E 6126268.7868	CL MH
21	N 2185839.5746 E 6126336.1937	CL MH
22	N 2185780.6873 E 6126655.1815	CL-CL PIPE
23	N 2185653.8839 E 6126601.3476	CL 42"X24" OUTLET
24	N 2185692.7839 E 6126625.8348	CL 42"X24" TEE

SCALE 1"=30'

30 15 0 30 60 90

SCALE: 1"=30'

FILENAME: 6232A-C030.dwg

LAST UPDATED: 01/18/2012 11:38 AM

LAST SAVED BY: drujillo

No.	DATE	REVISIONS	APPROVED

DESIGNED: WFM
DRAWN: DDT
CHECKED: CLM

RBF CONSULTING

carollo

IRVINE RANCH WATER DISTRICT

COREY HESS	RCE NO. 68499	PROJECT ENGINEER	DATE
CINDY MILLER	RCE NO. 58116	PROJECT MANAGER	DATE
PATRICIA UEMATSU	RCE NO. 36762	PRINCIPAL ENGINEER	DATE

IRVINE RANCH WATER DISTRICT
BAKER WATER TREATMENT PLANT
PROJECT NO. 11218

YARD PIPING PLAN
CLEARWELLS INLET/OUTLET
AREA 4

DRAWING **C030**

KEY NOTES

- 34 STORM DRAIN MANHOLE PER SPPWC STD. PLAN 322-2
- 35 PIPE ANCHOR PER SPPWC STD. PLAN 221-2
- 49 STORM DRAIN MANHOLE PER SPPWC STD. PLAN 320-2
- 79 CONSTRUCT TERRACE DRAIN TO PIPE TRANSITION PER DETAIL 5 ON DWG C021
- 114 CONNECT TO MECHANICAL PIPING PER DETAIL 4 ON DWG M013

MATCHLINE SEE DWG C031B

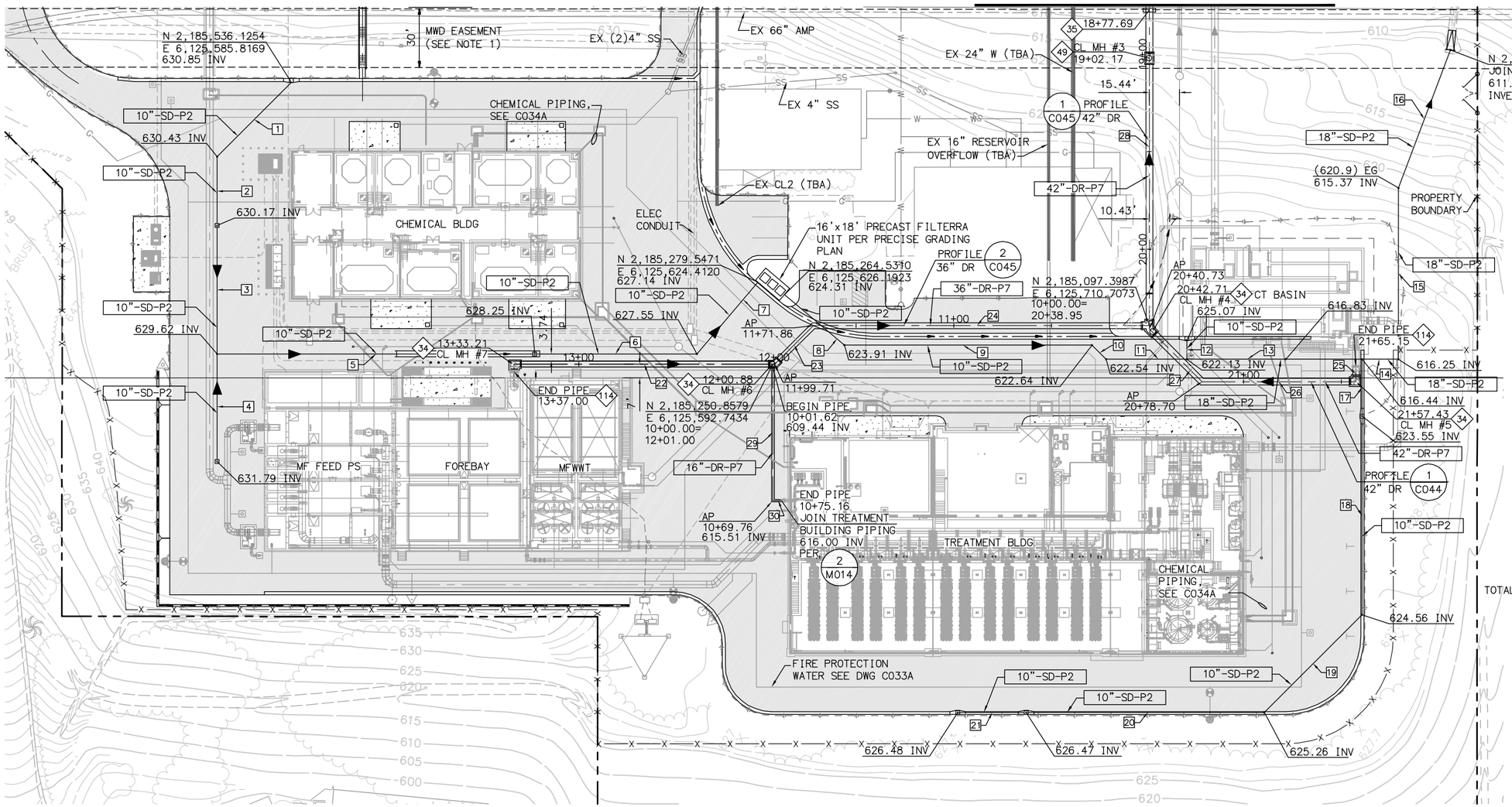

LINE/CURVE DATA TABLE				
NO	BEARING/DELTA	RADIUS	LENGTH	TANGENT
1	N76°42'36"W	--	53.62'	--
2	N58°17'24"E	--	35.30'	--
3	N58°17'24"E	--	65.59'	--
4	N58°17'24"E	--	54.03'	--
5	N31°42'36"W	--	162.42'	--
6	N31°42'36"W	--	82.89'	--
7	N81°25'27"W	--	48.22'	--
8	N08°34'33"E	--	40.13'	--
9	N31°42'36"W	--	126.62'	--
10	N13°17'24"E	--	10.17'	--
11	N31°42'36"W	--	41.34'	--
12	N58°17'24"E	--	9.74'	--
13	N31°42'36"W	--	89.50'	--
14	N31°42'36"W	--	18.66'	--
15	N58°17'24"E	--	87.55'	--
16	N78°53'27"E	--	75.43'	--
17	N58°17'24"E	--	29.01'	--
18	N58°17'24"E	--	101.58'	--
19	N76°42'36"W	--	70.71'	--
20	N31°42'36"W	--	121.69'	--
21	N31°42'36"W	--	35.00'	--
22	N31°42'36"W	--	133.50'	--
23	N76°42'36"W	--	27.85'	--
24	N31°42'36"W	--	171.86'	--
25	N58°17'24"E	--	7.72'	--
26	N31°42'36"W	--	78.74'	--
27	N13°17'24"E	--	37.97'	--
TOTAL 28	N58°16'30"E	--	338.59'	--
29	N58°17'24"E	--	69.76'	--
30	N31°42'36"W	--	5.40'	--

NOTES

1. SPECIAL CONSTRUCTION REQUIREMENTS APPLY WITHIN SAC AND MWD EASEMENTS. SEE SPECIFICATIONS.

SCALE: 1"=30'

30 15 0 30 60 90

SCALE: 1"=30'

FILENAME: 6232A-C031A.dwg LAST UPDATED: 01/18/2012 08:47 AM LAST SAVED BY: scook

No.	DATE	REVISIONS	APPROVED

DESIGNED: CBH
DRAWN: DDT
CHECKED: CLM

RBF CONSULTING

carollo

IRVINE RANCH WATER DISTRICT

COREY HESS	RCE NO. 68499	PROJECT ENGINEER	DATE
CINDY MILLER	RCE NO. 58116	PROJECT MANAGER	DATE
PATRICIA UEMATSU	RCE NO. 36762	PRINCIPAL ENGINEER	DATE

IRVINE RANCH WATER DISTRICT
BAKER WATER TREATMENT PLANT
PROJECT NO. 11218

DRAIN PIPING PLAN AREA 1

DRAWING C031A

SHEET 80 OF 632

KEY NOTES

35 PIPE ANCHOR PER SPPWC STD. PLAN 221-2

36 OUTLET PER OCRMD STD. PLAN 1326

49 STORM DRAIN MANHOLE PER SPPWC STD. PLAN 320-2

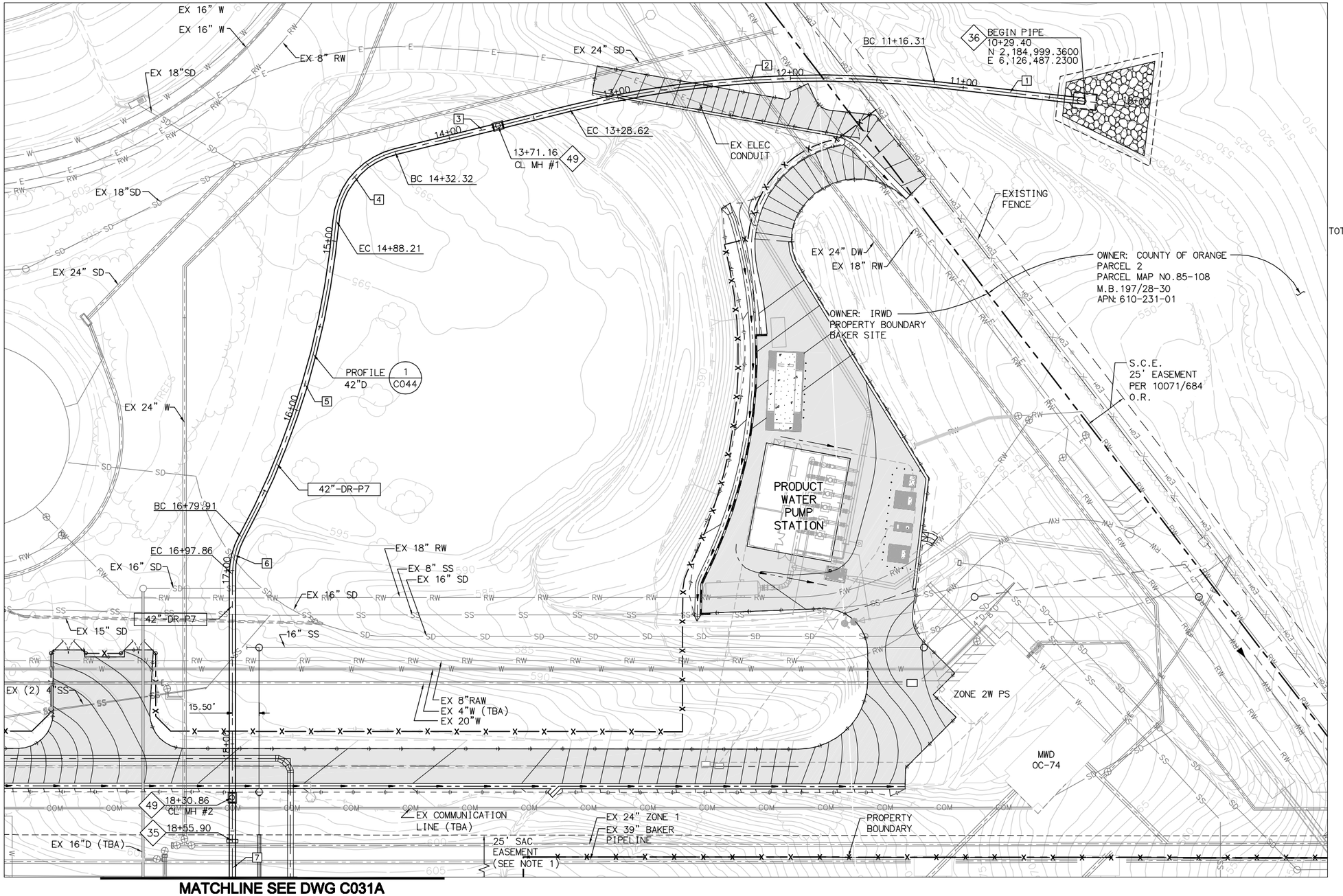

MATCHLINE SEE DWG C031A

LINE/CURVE DATA TABLE					
	NO	BEARING/DELTA	RADIUS	LENGTH	TANGENT
	1	N25°18'57"W	--	86.91'	--
	2	20°16'24"	600.00'	212.30'	107.27'
	3	N45°35'21"W	--	103.70'	--
	4	71°09'46"	45.00'	55.89'	32.19'
	5	23°19'14"	471.00'	191.71'	97.20'
	6	28°17'37"	45.00'	22.22'	11.34'
TOTAL	7	N58°16'30"E	--	338.59'	--

NOTES

1. SPECIAL CONSTRUCTION REQUIREMENTS APPLY WITH SAC AND MWD EASEMENTS. SEE SPECIFICATIONS.

SCALE: 1"=30'

30 15 0 30 60 90

SCALE: 1"=30'

FILENAME: 6232A-C031B.dwg

LAST UPDATED: 01/18/2012 08:40 AM

LAST SAVED BY: scook

No.	DATE	REVISIONS	APPROVED

DESIGNED: CBH
DRAWN: DDT
CHECKED: CLM

RBF CONSULTING

carollo

IRVINE RANCH WATER DISTRICT

COREY HESS	RCE NO. 68499	PROJECT ENGINEER	DATE
CINDY MILLER	RCE NO. 58116	PROJECT MANAGER	DATE
PATRICIA UEMATSU	RCE NO. 36762	PRINCIPAL ENGINEER	DATE

IRVINE RANCH WATER DISTRICT
BAKER WATER TREATMENT PLANT
PROJECT NO. 11218

DRAIN PIPING PLAN AREA 3

DRAWING **C031B**

SHEET **81** OF **632**

KEY NOTES

- (23) 48" DIAMETER SEWER MANHOLE PER IRWD STD. DWG. S-1
- (25) CONSTRUCT CONTAINMENT PIPING USING SDR 35 PVC PIPE. PROVIDE SKIDS AND FLOAT BLOCKS PER IRWD STD. DWG. W-21. FILL CONTAINMENT PIPE WITH GROUT
- (52) TERMINAL CLEANOUT PER IRWD STD. DWG. S-5
- (53) PIPE TRENCH PER IRWD STD. DWG. S-6
- (127) CHEMICAL CONTAINMENT AREA DRAIN BOX, 2'-0" SQUARE INSIDE WALL DIMENSION

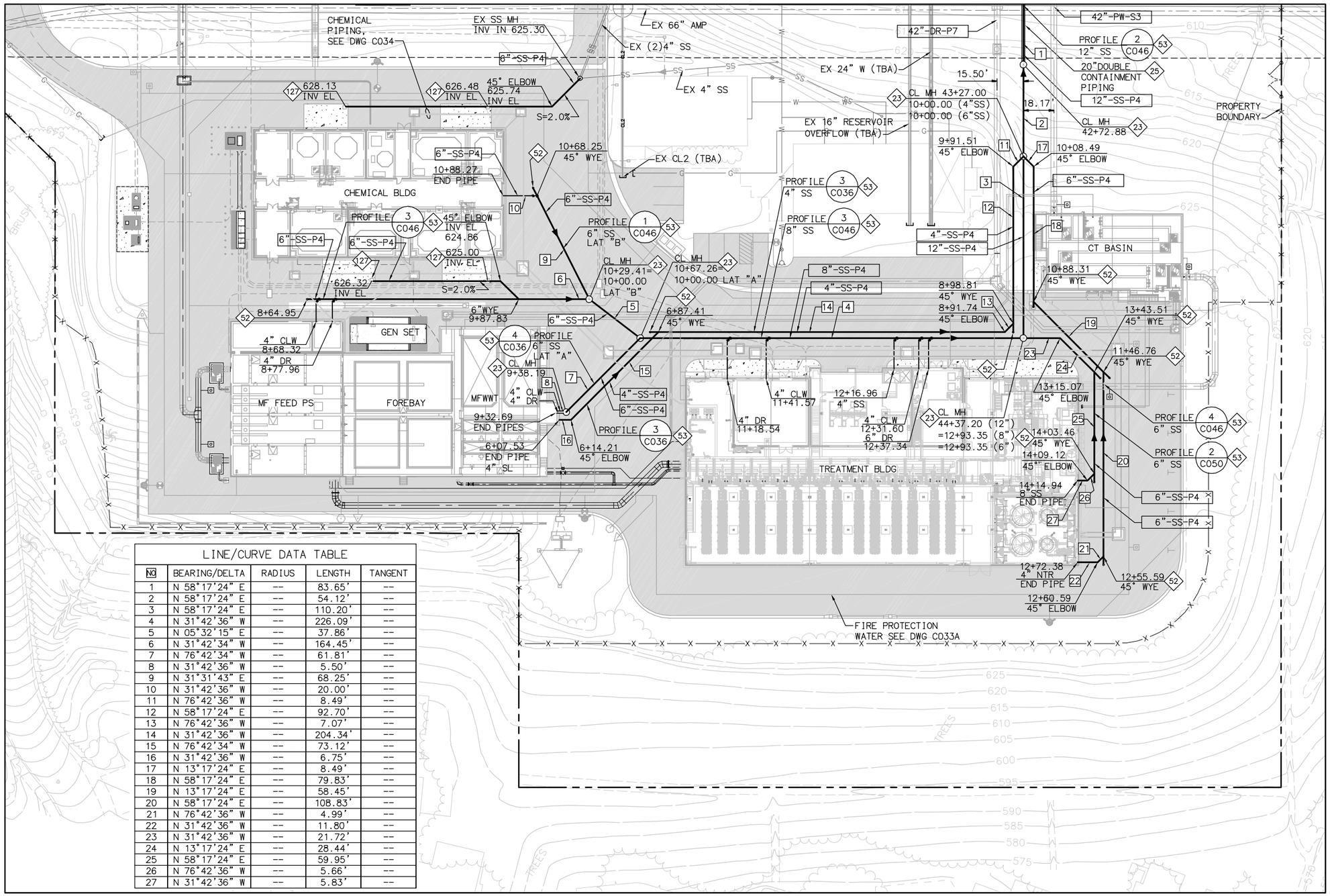

LINE/CURVE DATA TABLE

NO	BEARING/DELTA	RADIUS	LENGTH	TANGENT
1	N 58°17'24" E	--	83.65'	--
2	N 58°17'24" E	--	54.12'	--
3	N 58°17'24" E	--	110.20'	--
4	N 31°42'36" W	--	226.09'	--
5	N 05°32'15" E	--	37.86'	--
6	N 31°42'34" W	--	164.45'	--
7	N 76°42'34" W	--	61.81'	--
8	N 31°42'36" W	--	5.50'	--
9	N 31°31'43" E	--	68.25'	--
10	N 31°42'36" W	--	20.00'	--
11	N 76°42'36" W	--	8.49'	--
12	N 58°17'24" E	--	92.70'	--
13	N 76°42'36" W	--	7.07'	--
14	N 31°42'36" W	--	204.34'	--
15	N 76°42'34" W	--	73.12'	--
16	N 31°42'36" W	--	6.75'	--
17	N 13°17'24" E	--	8.49'	--
18	N 58°17'24" E	--	79.83'	--
19	N 13°17'24" E	--	58.45'	--
20	N 58°17'24" E	--	108.83'	--
21	N 76°42'36" W	--	4.99'	--
22	N 31°42'36" W	--	11.80'	--
23	N 31°42'36" W	--	21.72'	--
24	N 13°17'24" E	--	28.44'	--
25	N 58°17'24" E	--	59.95'	--
26	N 76°42'36" W	--	5.66'	--
27	N 31°42'36" W	--	5.83'	--

SCALE 1"=30'

30 15 0 30 60 90

SCALE: 1"=30'

FILENAME: 6232A-C032A.dwg LAST UPDATED: 01/24/2012 11:44 AM LAST SAVED BY: dtrujillo

No.	DATE	REVISIONS	APPROVED

DESIGNED: CBH
DRAWN: DDT
CHECKED: CLM

RBF CONSULTING

carollo

IRVINE RANCH WATER DISTRICT

COREY HESS	RCE NO. 68499	PROJECT ENGINEER	DATE
CINDY MILLER	RCE NO. 58116	PROJECT MANAGER	DATE
PATRICIA UEMATSU	RCE NO. 36762	PRINCIPAL ENGINEER	DATE

IRVINE RANCH WATER DISTRICT
BAKER WATER TREATMENT PLANT
PROJECT NO. 11218

SEWER PIPING PLAN
AREA 1

DRAWING C032A
SHEET 82 OF 632

KEY NOTES

23 48" DIAMETER SEWER MANHOLE PER IRWD STD. DWG. S-1

25 CONSTRUCT CONTAINMENT PIPING USING SDR 35 PVC PIPE. PROVIDE SKIDS AND FLOAT BLOCKS PER IRWD STD. DWG. W-21. FILL CONTAINMENT PIPE WITH GROUT

36 OUTLET PER OCRMD STD. PLAN 1326

NOTES

1. SPECIAL CONSTRUCTION REQUIREMENTS APPLY WITH SAC AND MWD EASEMENTS. SEE SPECIFICATIONS.

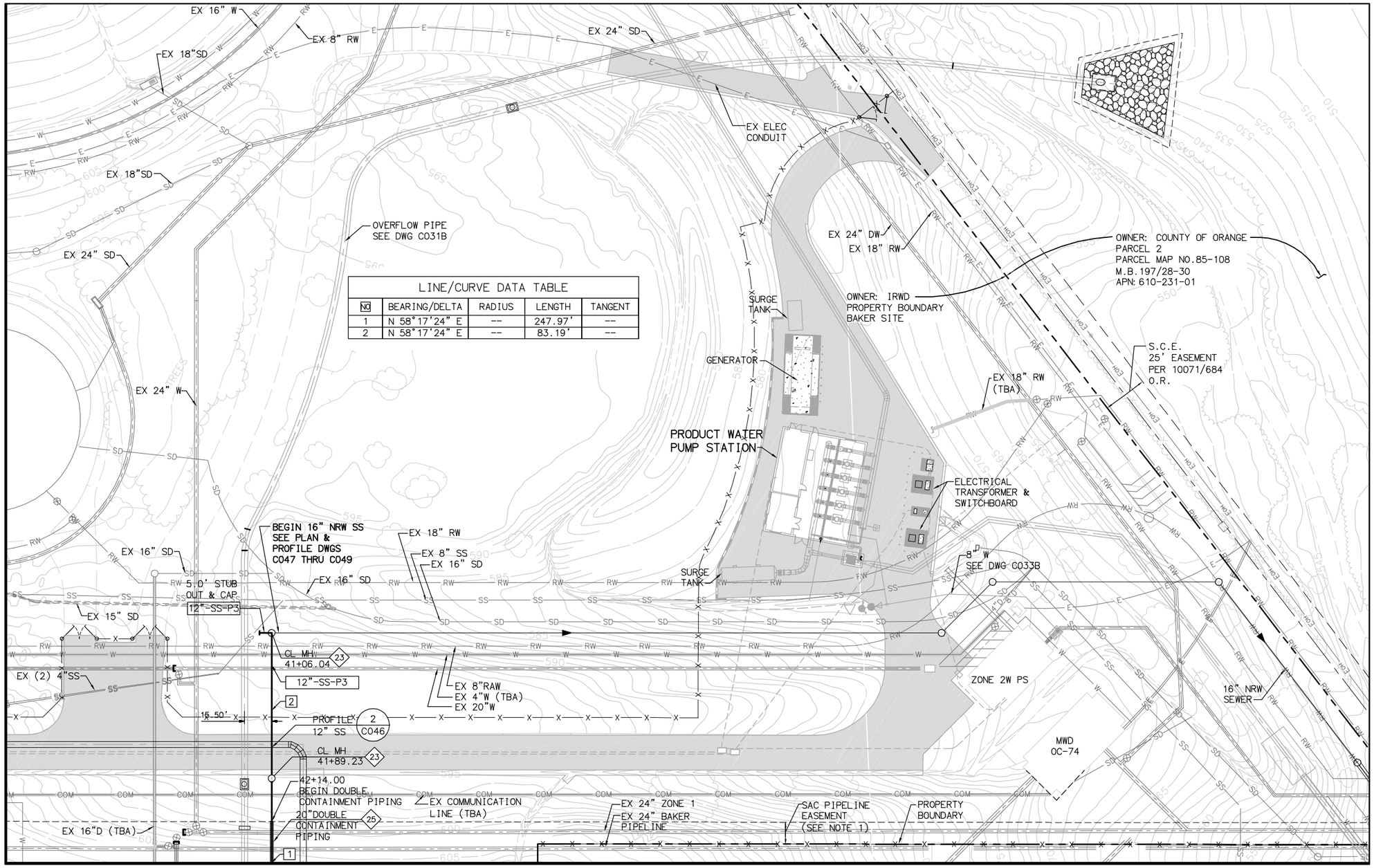

MATCHLINE SEE DWG C031B

LINE/CURVE DATA TABLE				
NO	BEARING/DELTA	RADIUS	LENGTH	TANGENT
1	N 58°17'24" E	--	247.97'	--
2	N 58°17'24" E	--	83.19'	--

FILENAME: 6232A-C032B.dwg
LAST UPDATED: 01/18/2012 12:15 PM
LAST SAVED BY: drujillo

No.	DATE	REVISIONS	APPROVED

DESIGNED: CBH
DRAWN: DDT
CHECKED: CLM

RBF CONSULTING
carollo
IRVINE RANCH WATER DISTRICT

COREY HESS	RCE NO. 68499	PROJECT ENGINEER	DATE
CINDY MILLER	RCE NO. 58116	PROJECT MANAGER	DATE
PATRICIA UEMATSU	RCE NO. 36762	PRINCIPAL ENGINEER	DATE

IRVINE RANCH WATER DISTRICT
BAKER WATER TREATMENT PLANT
PROJECT NO. 11218

SEWER PIPING PLAN AREA 3

DRAWING **C032B**
SHEET **83** OF **632**

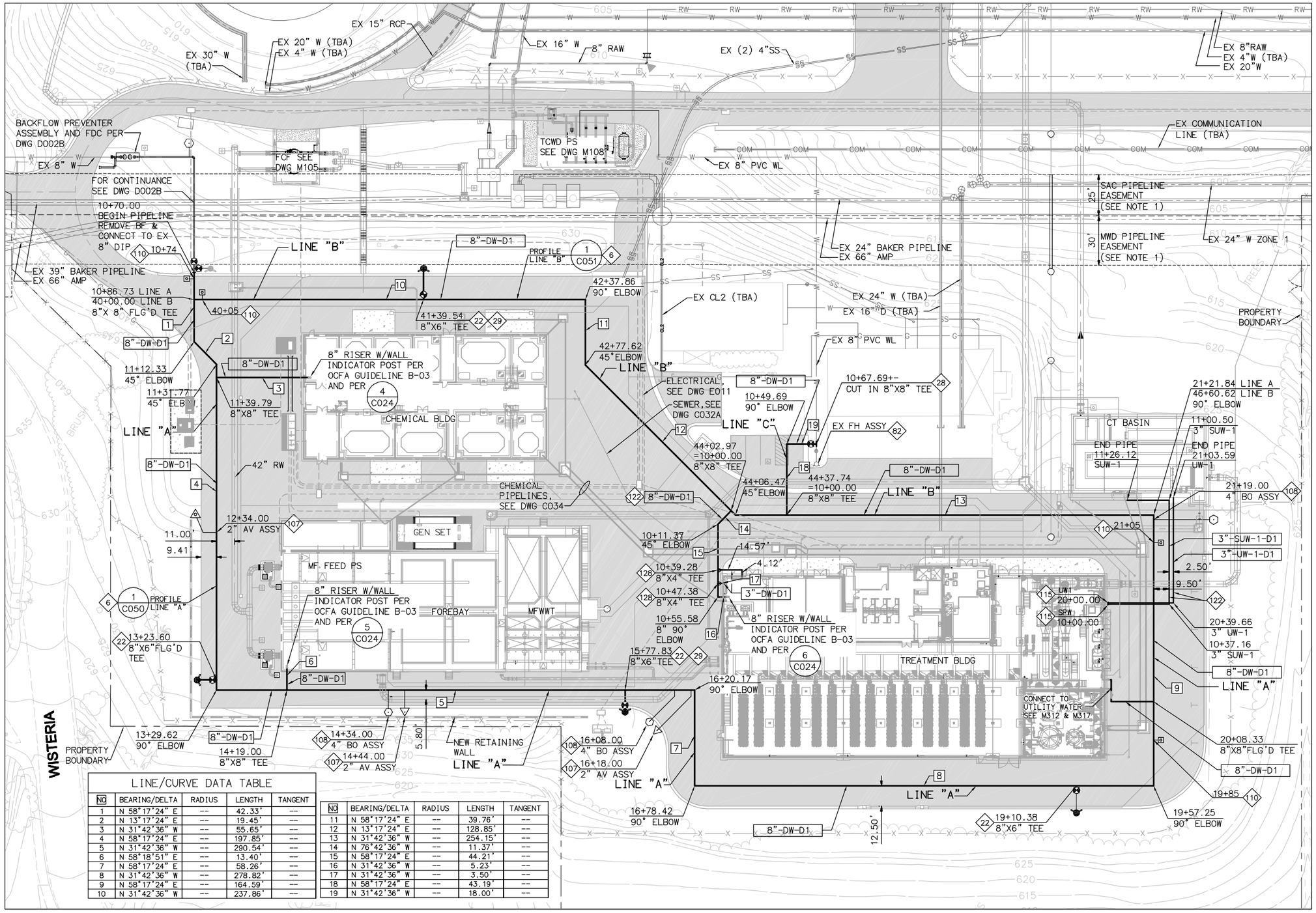

KEY NOTES

- 6 PROVIDE BONDING FOR PIPE JOINTS AND FITTINGS PER IRWD STD. DWG. CP-9
- 22 FIRE HYDRANT ASSEMBLY PER IRWD STD. DWG. W-8
- 28 CUT IN TEE FOR PVC PIPE PER IRWD STD. DWG. W-19
- 29 8" FLANGED GATE VALVE WITH VALVE BOX PER IRWD STD. DWG. W-22
- 82 PROTECT IN PLACE
- 107 INSTALL AIR AND VACUUM ASSEMBLY PER IRWD STD. W-11
- 108 INSTALL BLOWOFF ASSEMBLY PER IRWD STD. W-14 (SIZE PER PLAN, LAYOUT PER IRWD STD.)
- 110 INSTALL TWO WIRE TEST STATION PER IRWD STD. CP-1 AND IRWD STD G-2
- 115 CONNECT WITH TRANSITION SLEEVED COUPLING
- 122 CONCRETE ENCASE PER DETAIL 2 ON DWG M012 IF DEPTH OF COVER IS LESS THAN 3 FEET
- 128 4"X3" REDUCER

NOTES

1. SPECIAL CONSTRUCTION REQUIREMENTS APPLY WITH SAC AND MWD EASEMENTS. SEE SPECIFICATIONS.

LINE/CURVE DATA TABLE

NO	BEARING/DELTA	RADIUS	LENGTH	TANGENT
1	N 58°17'24" E	--	42.33'	--
2	N 13°17'24" E	--	19.45'	--
3	N 31°42'36" W	--	55.65'	--
4	N 58°17'24" E	--	197.85'	--
5	N 31°42'36" W	--	290.54'	--
6	N 58°18'51" E	--	13.40'	--
7	N 58°17'24" E	--	58.26'	--
8	N 31°42'36" W	--	278.82'	--
9	N 58°17'24" E	--	164.59'	--
10	N 31°42'36" W	--	237.86'	--

NO	BEARING/DELTA	RADIUS	LENGTH	TANGENT
11	N 58°17'24" E	--	39.76'	--
12	N 13°17'24" E	--	128.85'	--
13	N 31°42'36" W	--	254.15'	--
14	N 76°42'36" W	--	11.37'	--
15	N 58°17'24" E	--	44.21'	--
16	N 31°42'36" W	--	5.23'	--
17	N 31°42'36" W	--	3.50'	--
18	N 58°17'24" E	--	43.19'	--
19	N 31°42'36" W	--	18.00'	--

SCALE: 1"=30'

No.	DATE	REVISIONS	APPROVED

DESIGNED: CBH
DRAWN: DDT
CHECKED: CLM

RBF CONSULTING

carollo

IRVINE RANCH WATER DISTRICT

COREY HESS	RCE NO. 68499	PROJECT ENGINEER	DATE
CINDY MILLER	RCE NO. 58116	PROJECT MANAGER	DATE
PATRICIA UEMATSU	RCE NO. 36762	PRINCIPAL ENGINEER	DATE

IRVINE RANCH WATER DISTRICT
BAKER WATER TREATMENT PLANT
PROJECT NO. 11218

FIRE AND UTILITY WATER PLAN AREA 1 & 2

DRAWING C033A

SHEET 84 OF 632

FILENAME: 6232A-C033A.dwg
LAST UPDATED: 01/25/2012 04:31 PM
LAST SAVED BY: drujillo

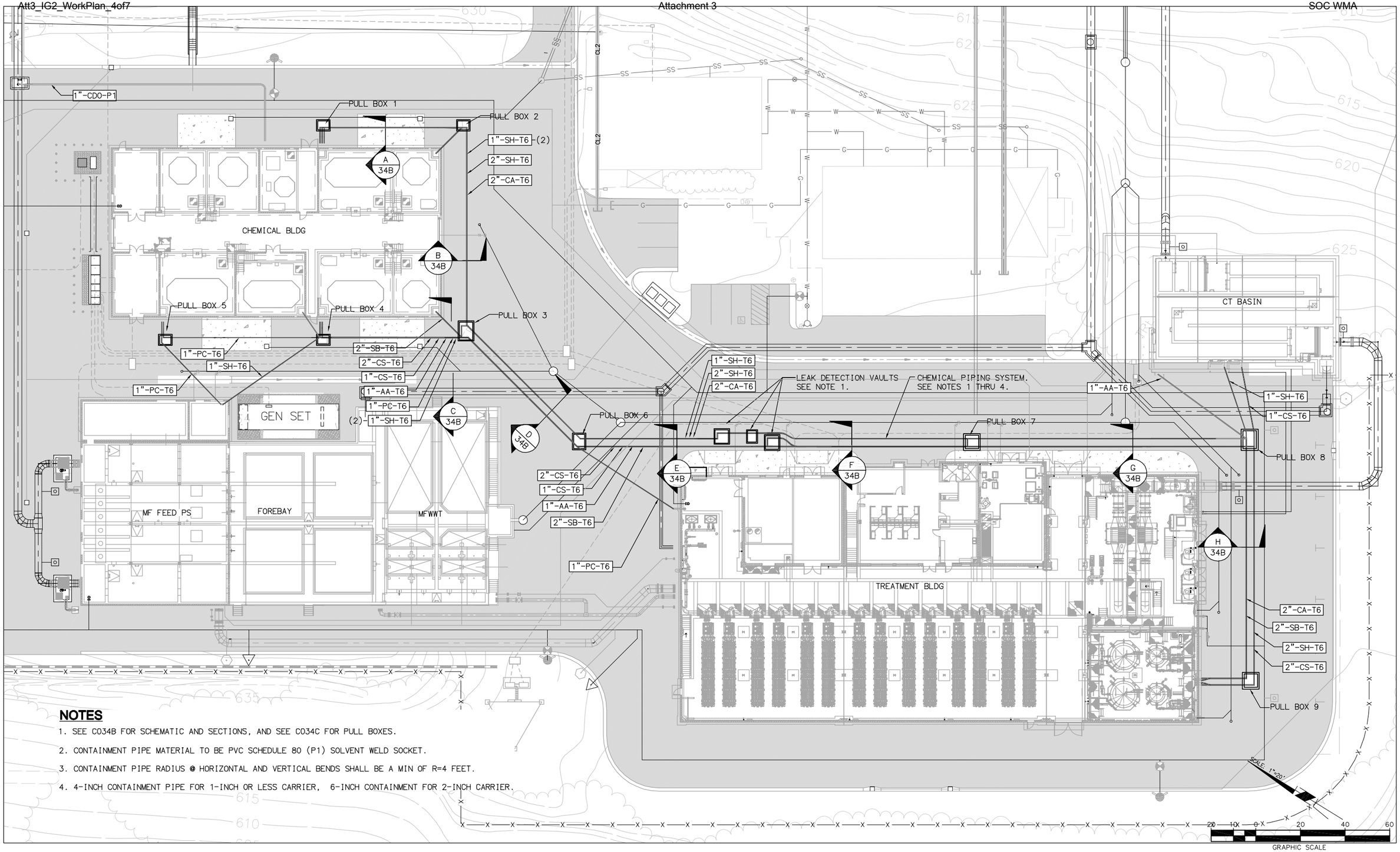

NOTES

1. SEE C034B FOR SCHEMATIC AND SECTIONS, AND SEE C034C FOR PULL BOXES.
2. CONTAINMENT PIPE MATERIAL TO BE PVC SCHEDULE 80 (P1) SOLVENT WELD SOCKET.
3. CONTAINMENT PIPE RADIUS @ HORIZONTAL AND VERTICAL BENDS SHALL BE A MIN OF R=4 FEET.
4. 4-INCH CONTAINMENT PIPE FOR 1-INCH OR LESS CARRIER, 6-INCH CONTAINMENT FOR 2-INCH CARRIER.

FILENAME: 6232A-C034A.dwg LAST UPDATED: 01/25/2012 05:00 PM LAST SAVED BY: dtrujillo

No.	DATE	REVISIONS	APPROVED

DESIGNED: WFM
DRAWN: DDT
CHECKED: CLM

RBF CONSULTING

carollo

IRVINE RANCH WATER DISTRICT

WILLIAM F. McINERNEY	RCE NO. 16084	PROJECT ENGINEER	DATE
CINDY MILLER	RCE NO. 58116	PROJECT MANAGER	DATE
PATRICIA UEMATSU	RCE NO. 36762	PRINCIPAL ENGINEER	DATE

IRVINE RANCH WATER DISTRICT
BAKER WATER TREATMENT PLANT
PROJECT NO. 11218

CHEMICAL PIPING PLAN AREA1

DRAWING C034A

SHEET 86 OF 632

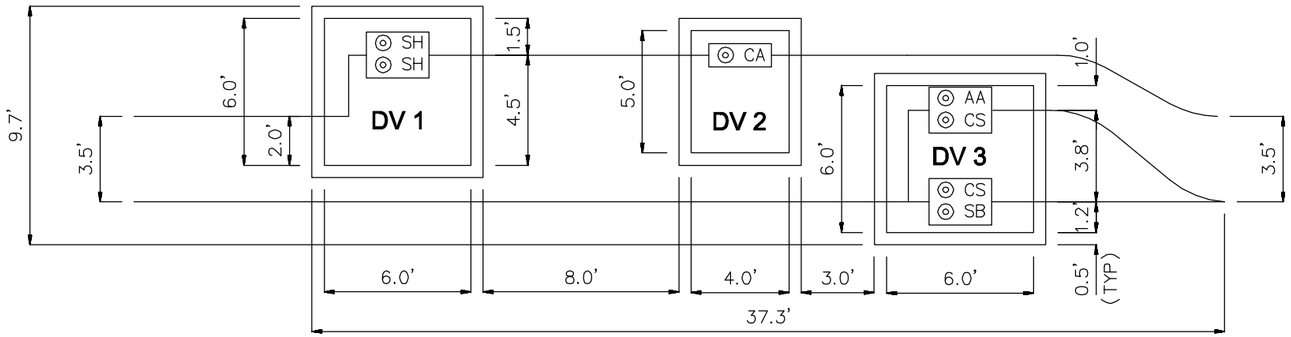

LEAK DETECTION VAULTS (1)
NTS

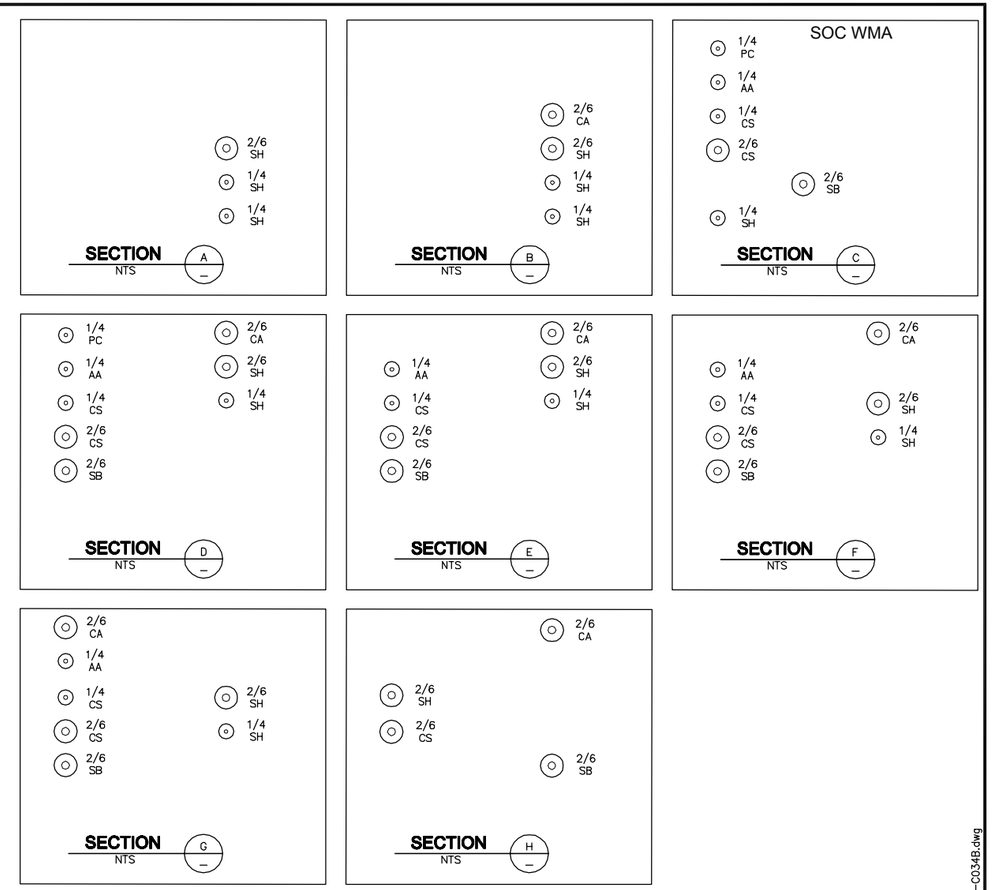

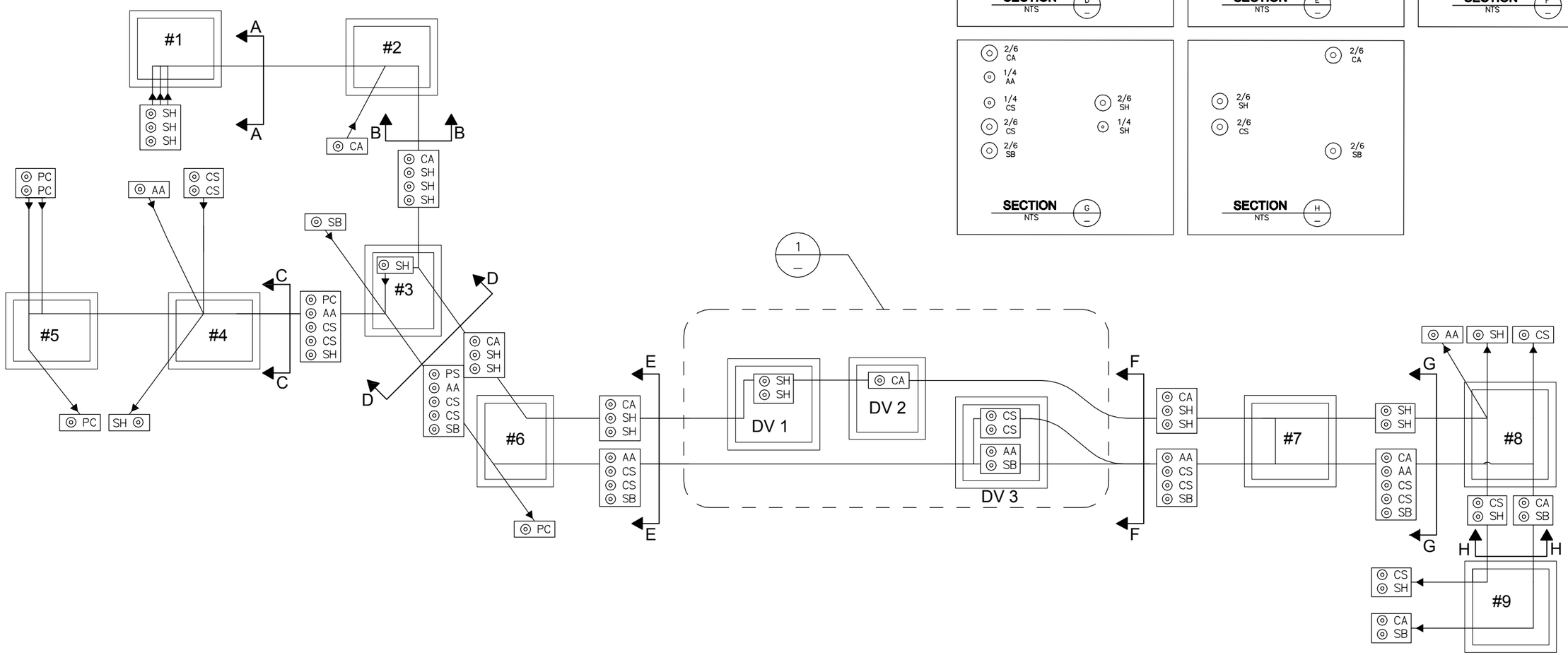

No.	DATE	REVISIONS	APPROVED

DESIGNED: WFM
DRAWN: DDT
CHECKED: CLM

RBF CONSULTING

carollo

IRVINE RANCH WATER DISTRICT

WILLIAM F. McINERNEY	RCE NO. 16084	PROJECT ENGINEER	DATE
CINDY MILLER	RCE NO. 58116	PROJECT MANAGER	DATE
PATRICIA UEMATSU	RCE NO. 36762	PRINCIPAL ENGINEER	DATE

IRVINE RANCH WATER DISTRICT
BAKER WATER TREATMENT PLANT
PROJECT NO. 11218

CHEMICAL PIPING SCHEMATIC AND SECTIONS

DRAWING C034B

SHEET 87 OF 632

FILENAME: 6232A-C034B.dwg
LAST UPDATED: 01/19/2012 10:12 AM
LAST SAVED BY: dtrujillo

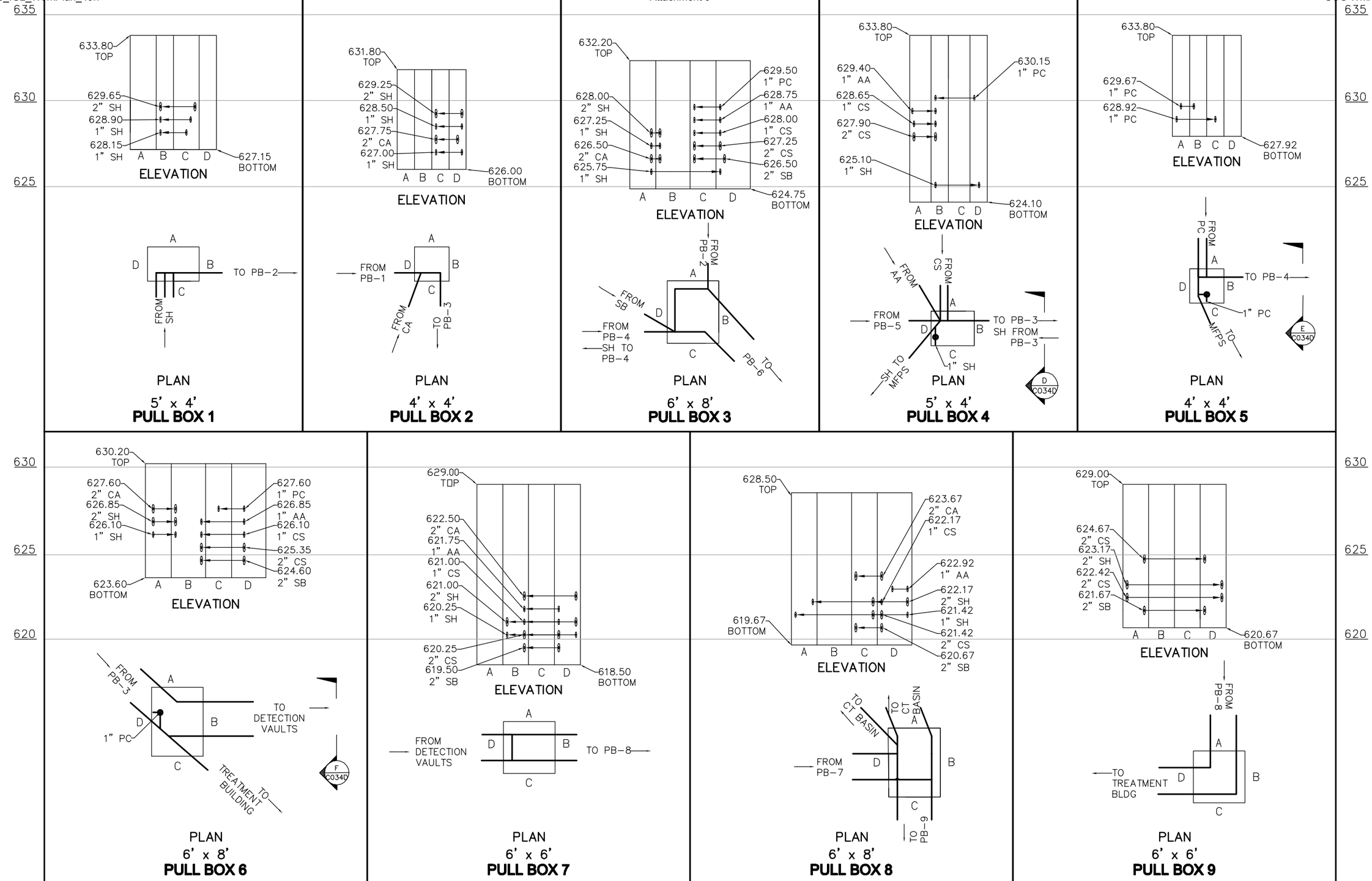

No.	DATE	REVISIONS	APPROVED

DESIGNED: WFM
DRAWN: DDT
CHECKED: CLM

RBF CONSULTING

carollo

IRVINE RANCH WATER DISTRICT

WILLIAM F. McINERNEY	RCE NO. 16084	PROJECT ENGINEER	DATE
CINDY MILLER	RCE NO. 58116	PROJECT MANAGER	DATE
PATRICIA UEMATSU	RCE NO. 36762	PRINCIPAL ENGINEER	DATE

IRVINE RANCH WATER DISTRICT
BAKER WATER TREATMENT PLANT
PROJECT NO. 11218

CHEMICAL PIPING PULL BOXES

DRAWING
C034C
SHEET
88 OF **632**

LAST SAVED BY: ewalker LAST UPDATED: 01/23/2012 10:41 AM FILENAME:6232A-C034C.dwg

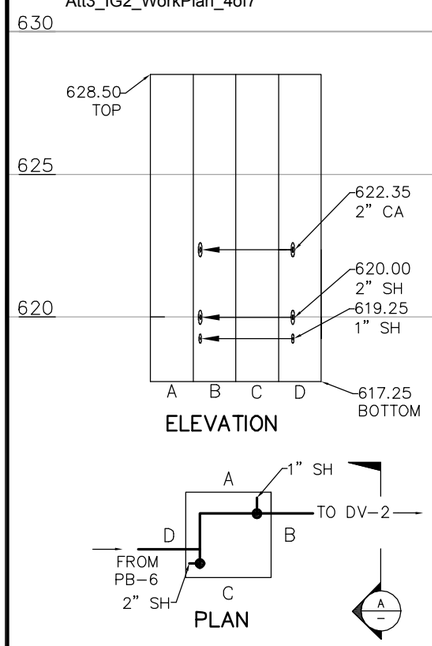

6' x 6'
LEAK DETECTION VAULT 1

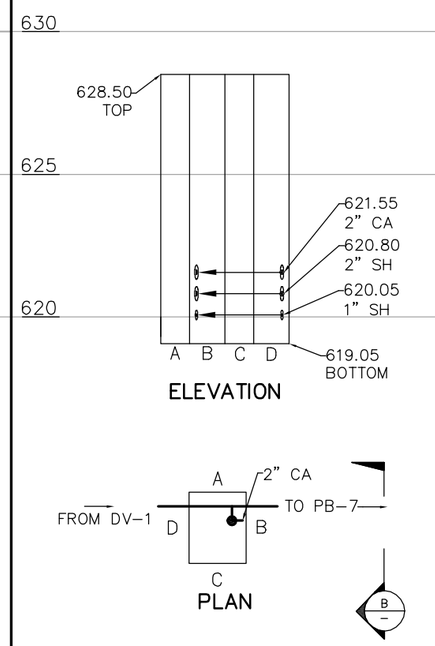

4' x 5'
LEAK DETECTION VAULT 2

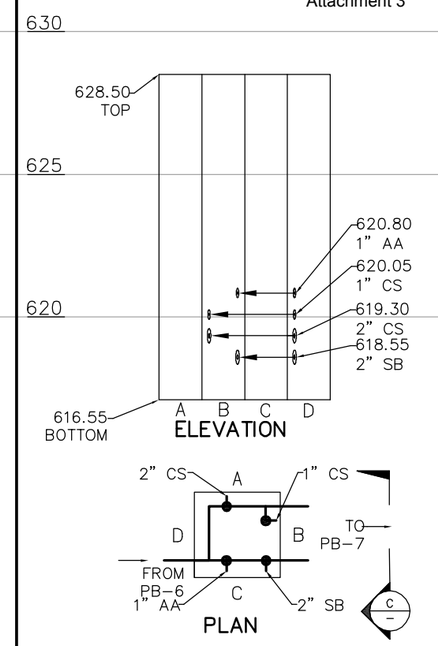

6' x 6'
LEAK DETECTION VAULT 3

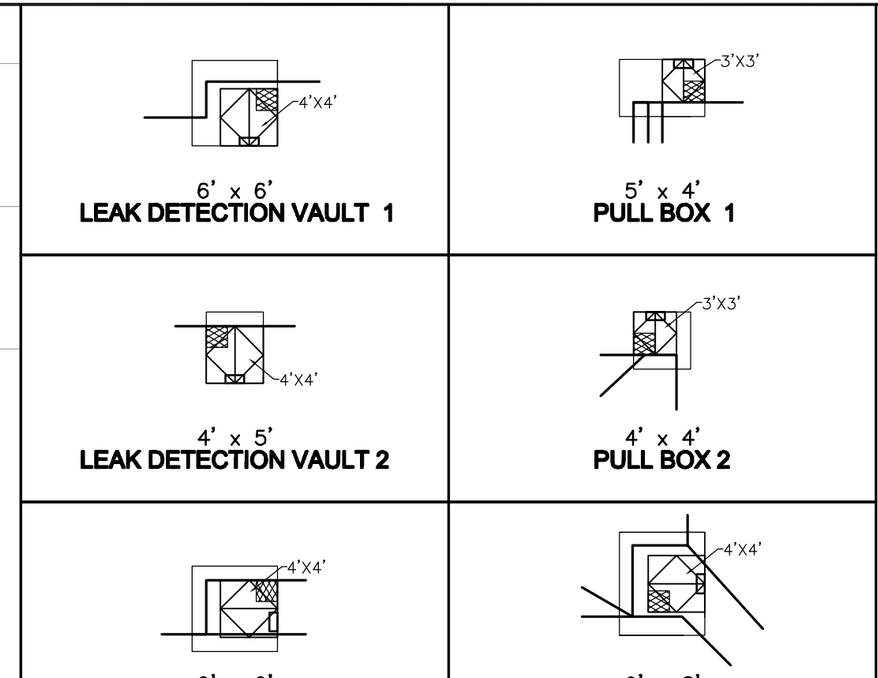

NOTES

SOC WMA

1. BLIND SUMP IS TO BE 18"X18" AND 2' DEEP
2. LADDER TO BE INSTALLED PER CCR, TITLE 8, SECTION 3277
3. HATCHES SHALL BE 3'X3' OR 4'X4' DOUBLE LEAF AS INDICATED

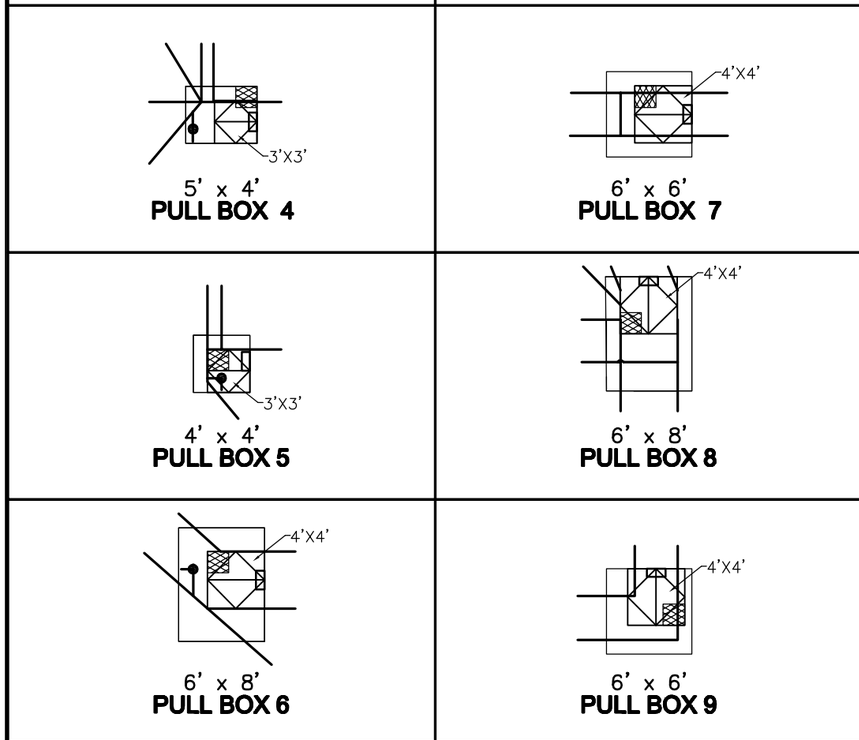

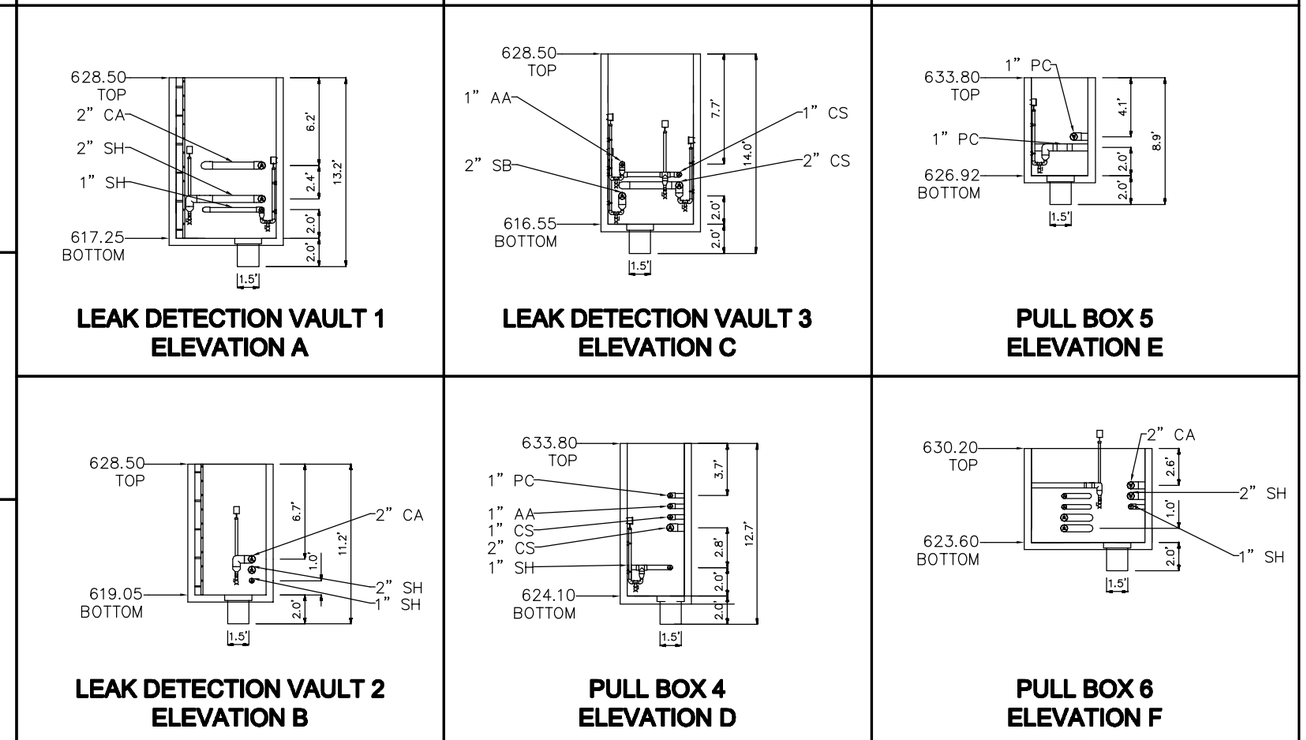

No.	DATE	REVISIONS	APPROVED

DESIGNED: WFM
DRAWN: DDT
CHECKED: CLM

RBF CONSULTING

carollo

IRVINE RANCH WATER DISTRICT

WILLIAM F. McINERNEY	RCE NO. 16084	PROJECT ENGINEER	DATE
CINDY MILLER	RCE NO. 58116	PROJECT MANAGER	DATE
PATRICIA UEMATSU	RCE NO. 36762	PRINCIPAL ENGINEER	DATE

IRVINE RANCH WATER DISTRICT
BAKER WATER TREATMENT PLANT
PROJECT NO. 11218

CHEMICAL PIPING LEAK DETECTION VAULTS AND PULL BOX DETAILS

DRAWING
C034D
SHEET
89 OF 632

LAST SAVED BY: ewalker LAST UPDATED: 01/23/2012 10:36 AM FILENAME: 6232A-C034D.dwg

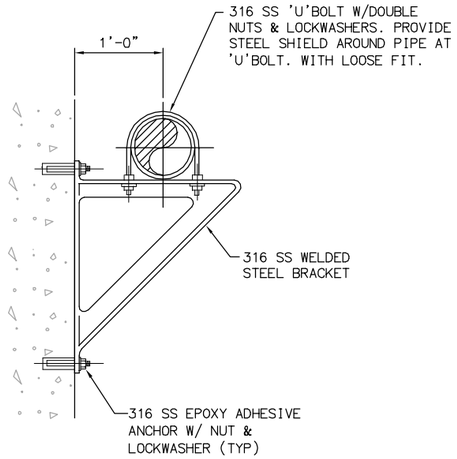

NOTE:
SPACE PIPE SUPPORTS AT 24" O.C. ALONG PIPE RUN OR AWAY FROM VAULT OR PULL BOX WALL

PIPE SUPPORT
CHEMICAL VAULTS AND PULL BOXES (1 / –)
N.T.S.

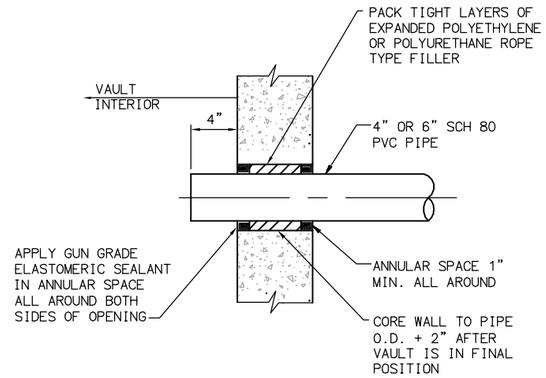

CONTAINMENT PIPE
VAULT WALL PENETRATION (2 / –)
N.T.S.

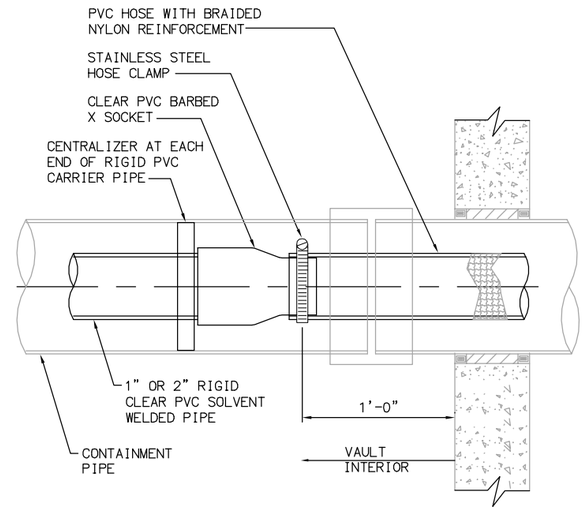

CARRIER PIPE CONNECTION (3 / –)
N.T.S.

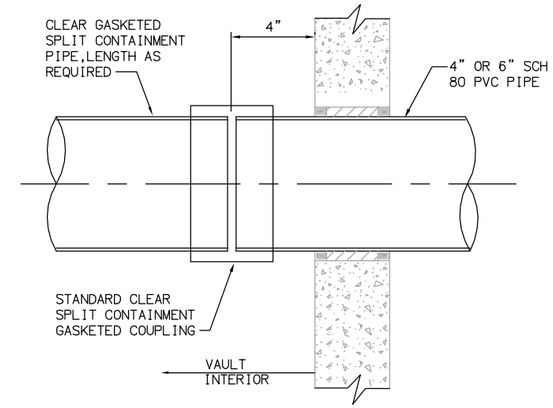

NOTES:

1. ALL CLEAR CONTAINMENT PIPE AND FITTINGS SHALL BE AS MANUFACTURED BY G.F. CONTAIN-IT OF GEORGE FISCHER SLOANE INC,
2. INSTALL PIPING IN ACCORDANCE WITH MANUFACTURER'S INSTRUCTIONS.

CONTAINMENT PIPE CONNECTION (4 / –)
N.T.S.

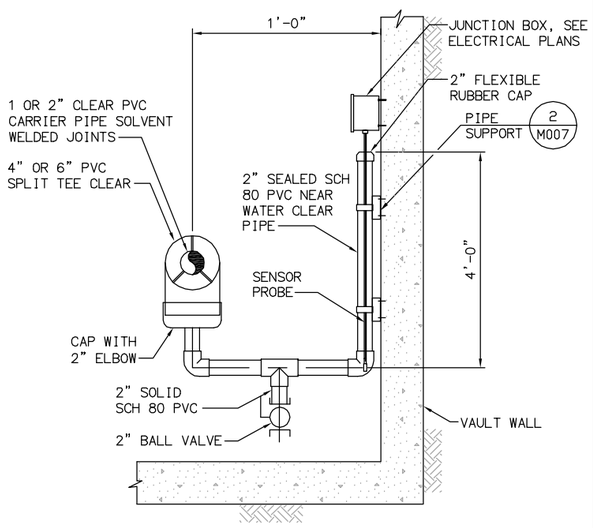

LEAK DETECTOR SENSOR (5 / –)
N.T.S.

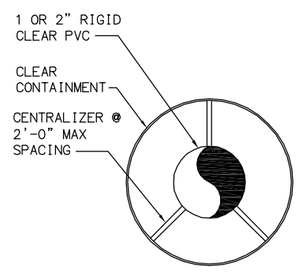

CENTRALIZER (6 / –)
N.T.S.

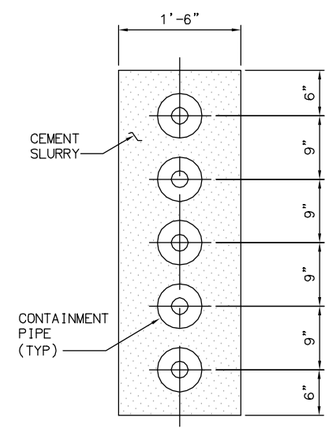

TYPICAL TRENCH SECTION (7 / –)
N.T.S.

No.	DATE	REVISIONS	APPROVED

DESIGNED: WFM
DRAWN: DDT
CHECKED: CLM

RBF CONSULTING

carollo

IRVINE RANCH WATER DISTRICT

WILLIAM F. McINERNEY	RCE NO. 16084	PROJECT ENGINEER	DATE
CINDY MILLER	RCE NO. 58116	PROJECT MANAGER	DATE
PATRICIA UEMATSU	RCE NO. 36762	PRINCIPAL ENGINEER	DATE

IRVINE RANCH WATER DISTRICT
BAKER WATER TREATMENT PLANT
PROJECT NO. 11218

CHEMICAL PIPING DETAILS

DRAWING
C034E
SHEET
90 OF **632**

LAST SAVED BY: drujillo LAST UPDATED: 01/19/2012 03:23 PM FILENAME:6232A-C034E.dwg

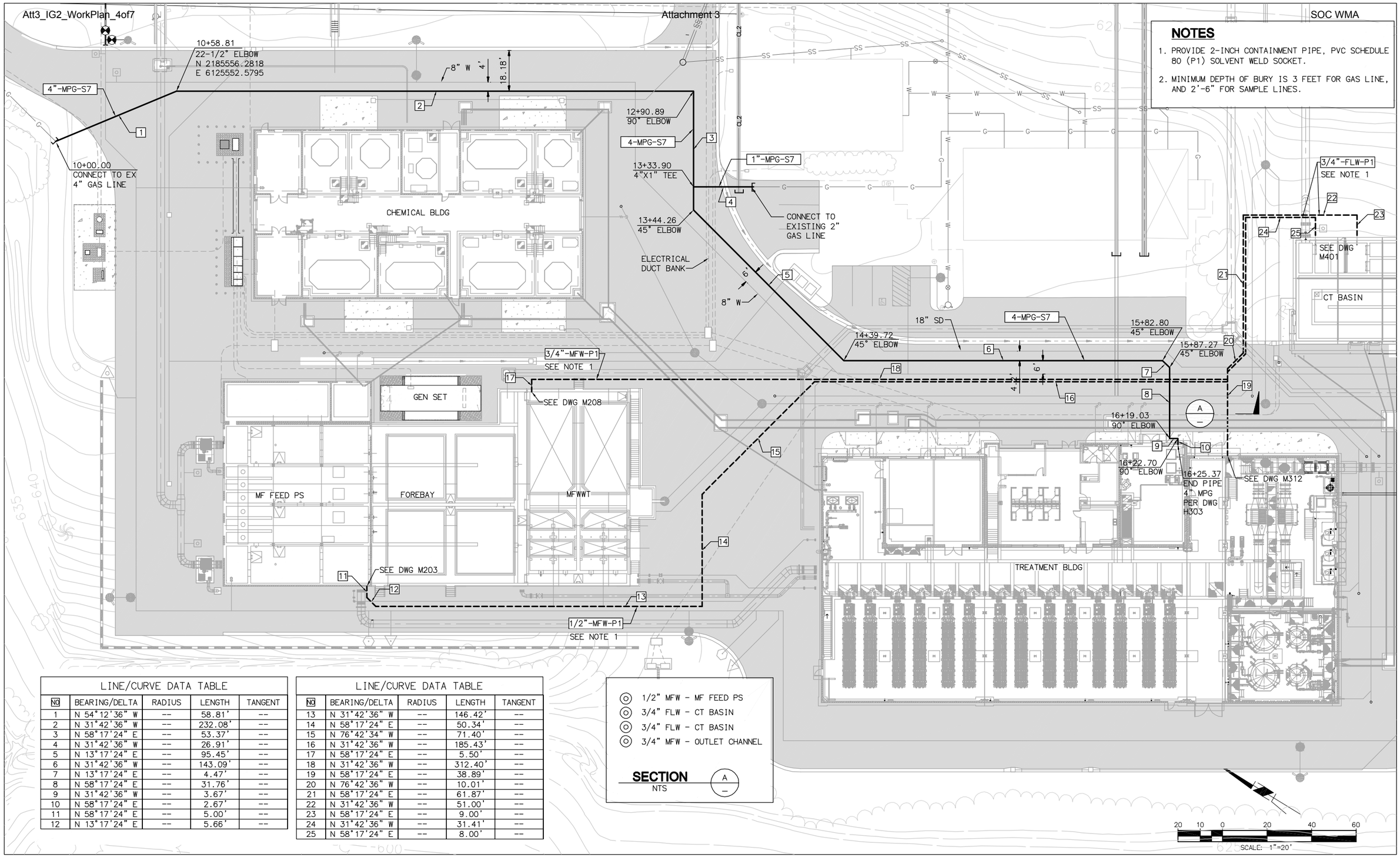

NOTES

1. PROVIDE 2-INCH CONTAINMENT PIPE, PVC SCHEDULE 80 (P1) SOLVENT WELD SOCKET.
2. MINIMUM DEPTH OF BURY IS 3 FEET FOR GAS LINE, AND 2'-6" FOR SAMPLE LINES.

LINE/CURVE DATA TABLE				
NO	BEARING/DELTA	RADIUS	LENGTH	TANGENT
1	N 54°12'36" W	--	58.81'	--
2	N 31°42'36" W	--	232.08'	--
3	N 58°17'24" E	--	53.37'	--
4	N 31°42'36" W	--	26.91'	--
5	N 13°17'24" E	--	95.45'	--
6	N 31°42'36" W	--	143.09'	--
7	N 13°17'24" E	--	4.47'	--
8	N 58°17'24" E	--	31.76'	--
9	N 31°42'36" W	--	3.67'	--
10	N 58°17'24" E	--	2.67'	--
11	N 58°17'24" E	--	5.00'	--
12	N 13°17'24" E	--	5.66'	--

LINE/CURVE DATA TABLE				
NO	BEARING/DELTA	RADIUS	LENGTH	TANGENT
13	N 31°42'36" W	--	146.42'	--
14	N 58°17'24" E	--	50.34'	--
15	N 76°42'34" W	--	71.40'	--
16	N 31°42'36" W	--	185.43'	--
17	N 58°17'24" E	--	5.50'	--
18	N 31°42'36" W	--	312.40'	--
19	N 58°17'24" E	--	38.89'	--
20	N 76°42'36" W	--	10.01'	--
21	N 58°17'24" E	--	61.87'	--
22	N 31°42'36" W	--	51.00'	--
23	N 58°17'24" E	--	9.00'	--
24	N 31°42'36" W	--	31.41'	--
25	N 58°17'24" E	--	8.00'	--

- 1/2" MFW - MF FEED PS
- 3/4" FLW - CT BASIN
- 3/4" FLW - CT BASIN
- 3/4" MFW - OUTLET CHANNEL

SECTION A
NTS

No.	DATE	REVISIONS	APPROVED

DESIGNED: CBH
DRAWN: DDT
CHECKED: CLM

RBF CONSULTING
carollo
IRVINE RANCH WATER DISTRICT

COREY HESS	RCE NO. 68499	PROJECT ENGINEER	DATE
CINDY MILLER	RCE NO. 58116	PROJECT MANAGER	DATE
PATRICIA UEMATSU	RCE NO. 36762	PRINCIPAL ENGINEER	DATE

IRVINE RANCH WATER DISTRICT
BAKER WATER TREATMENT PLANT
PROJECT NO. 11218

SAMPLE AND GAS PIPING PLAN AREA1

DRAWING
C035
SHEET
91 OF 632

LAST SAVED BY: drujillo LAST UPDATED: 01/20/2012 11:30 AM FILENAME: 6232A-C035.dwg

SCALE
HORIZ 1"=30'
VERT 1"=4'

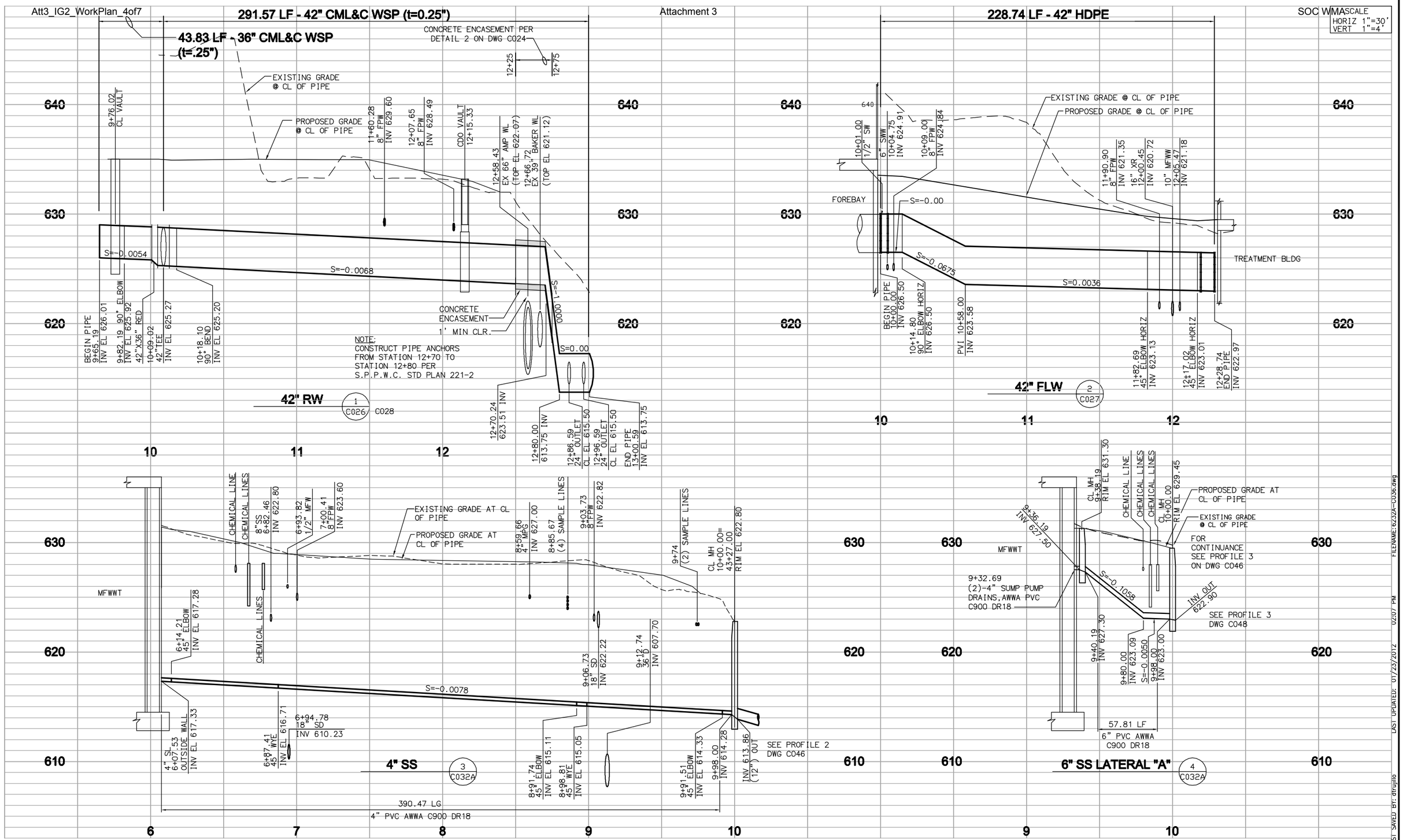

No.	DATE	REVISIONS	APPROVED

DESIGNED: CBH
DRAWN: DDT
CHECKED: CLM

RBF CONSULTING

carollo

IRVINE RANCH WATER DISTRICT

COREY HESS	RCE NO. 68499	PROJECT ENGINEER	DATE
CINDY MILLER	RCE NO. 58116	PROJECT MANAGER	DATE
PATRICIA UEMATSU	RCE NO. 36762	PRINCIPAL ENGINEER	DATE

IRVINE RANCH WATER DISTRICT
BAKER WATER TREATMENT PLANT
PROJECT NO. 11218

YARD PIPING PROFILES I

DRAWING
C036
SHEET
92 OF 632

LAST SAVED BY: drujillo LAST UPDATED: 01/23/2012 02:07 PM FILENAME: 6232A-C036.dwg

SCALE
HORIZ 1"=30'
VERT 1"=4'

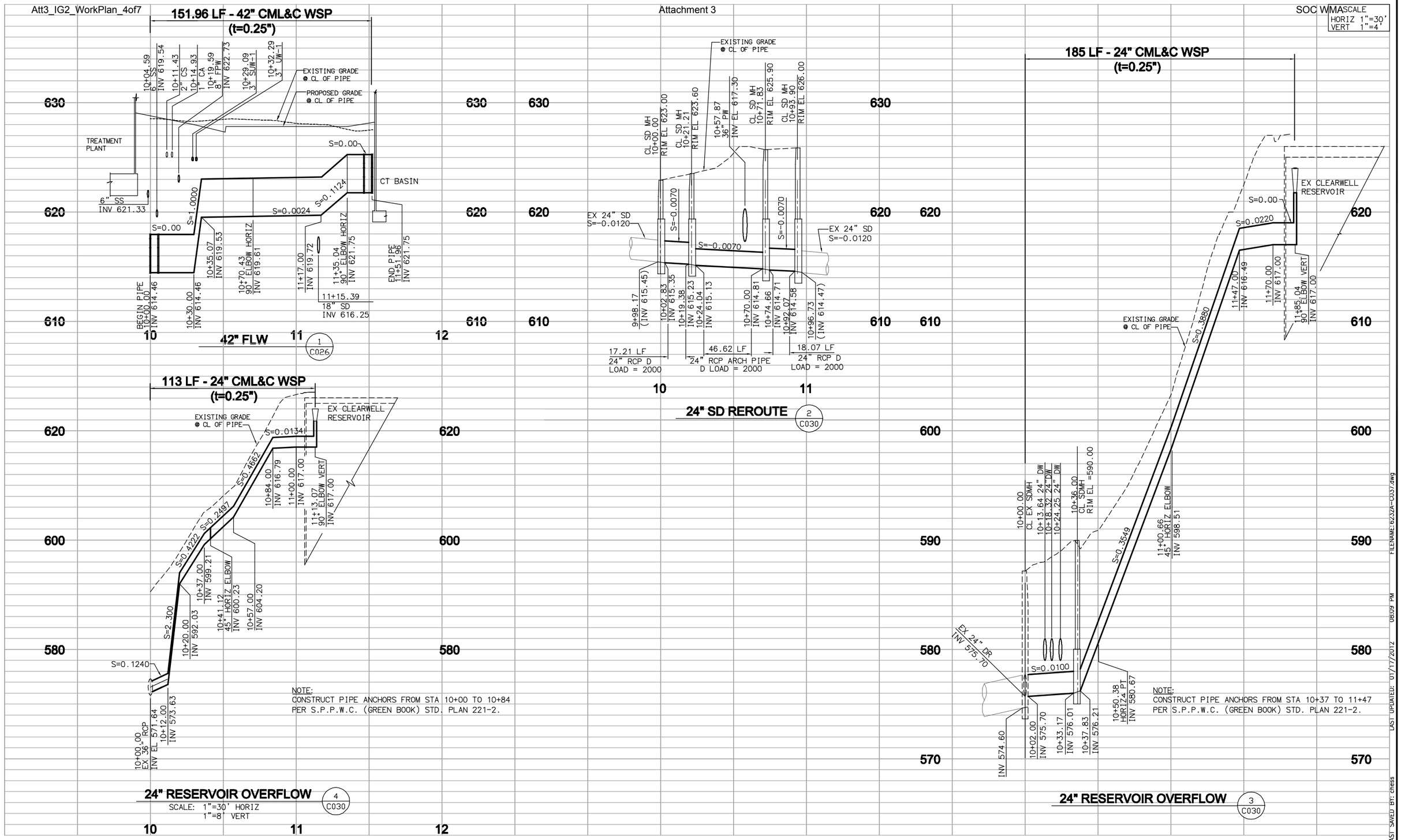

No.	DATE	REVISIONS	APPROVED

DESIGNED: CBH
DRAWN: DDT
CHECKED: CLM

RBF CONSULTING
carollo
IRVINE RANCH WATER DISTRICT

COREY HESS	RCE NO. 68499	PROJECT ENGINEER	DATE
CINDY MILLER	RCE NO. 58116	PROJECT MANAGER	DATE
PATRICIA UEMATSU	RCE NO. 36762	PRINCIPAL ENGINEER	DATE

IRVINE RANCH WATER DISTRICT
BAKER WATER TREATMENT PLANT
PROJECT NO. 11218

YARD PIPING PROFILES II

DRAWING C037
SHEET 93 OF 632

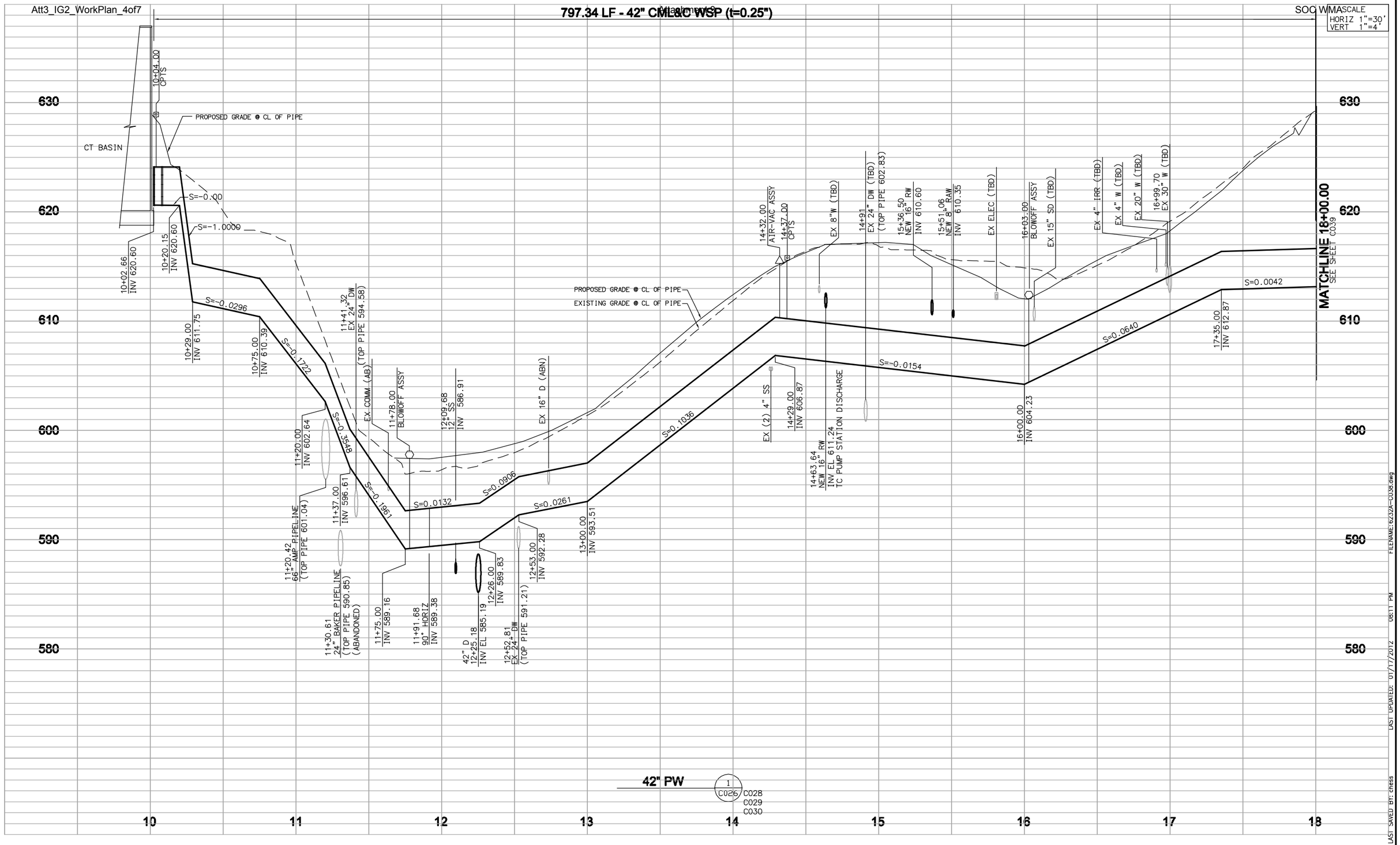

No.	DATE	REVISIONS	APPROVED

DESIGNED: CBH
DRAWN: DDT
CHECKED: CLM

RBF CONSULTING

carollo

IRVINE RANCH WATER DISTRICT

COREY HESS	RCE NO. 68499	PROJECT ENGINEER	DATE
CINDY MILLER	RCE NO. 58116	PROJECT MANAGER	DATE
PATRICIA UEMATSU	RCE NO. 36762	PRINCIPAL ENGINEER	DATE

IRVINE RANCH WATER DISTRICT
BAKER WATER TREATMENT PLANT
PROJECT NO. 11218

YARD PIPING PROFILES III

DRAWING
C038
SHEET
94 OF **632**

LAST SAVED BY: chess LAST UPDATED: 01/17/2012 08:11 PM FILENAME: 6232A-C038.dwg

SCALE
HORIZ 1"=30'
VERT 1"=4'

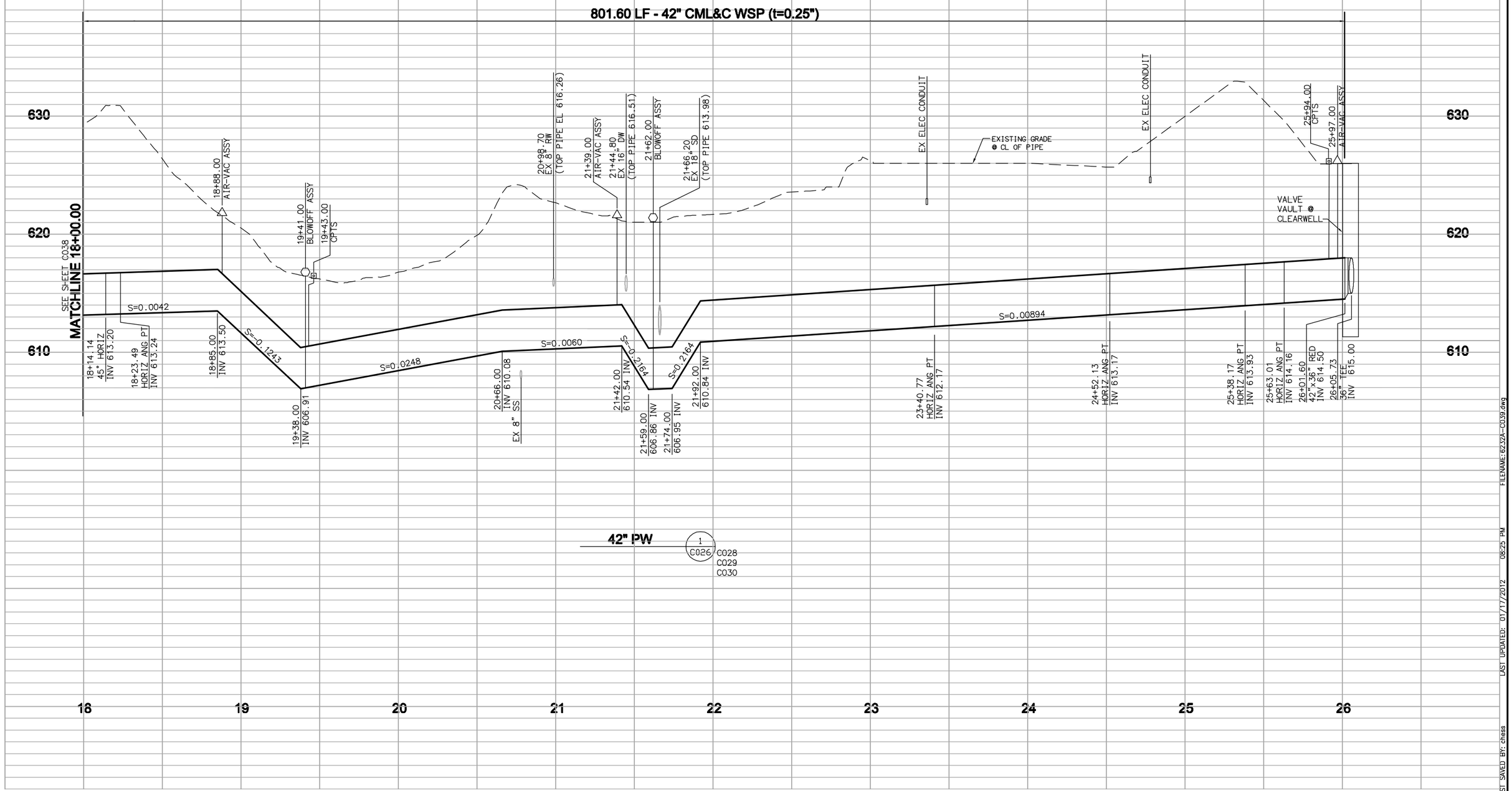

LAST SAVED BY: chess LAST UPDATED: 01/17/2012 08:25 PM FILENAME: 6232A-C039.dwg

No.	DATE	REVISIONS	APPROVED

DESIGNED: CBH
DRAWN: DDT
CHECKED: CLM

RBF CONSULTING

carollo

IRVINE RANCH WATER DISTRICT

COREY HESS	RCE NO. 68499	PROJECT ENGINEER	DATE
CINDY MILLER	RCE NO. 58116	PROJECT MANAGER	DATE
PATRICIA UEMATSU	RCE NO. 36762	PRINCIPAL ENGINEER	DATE

IRVINE RANCH WATER DISTRICT
BAKER WATER TREATMENT PLANT
PROJECT NO. 11218

YARD PIPING PROFILES IV

DRAWING
C039
SHEET
95 OF **632**

SCALE
HORIZ 1"=30'
VERT 1"=4'

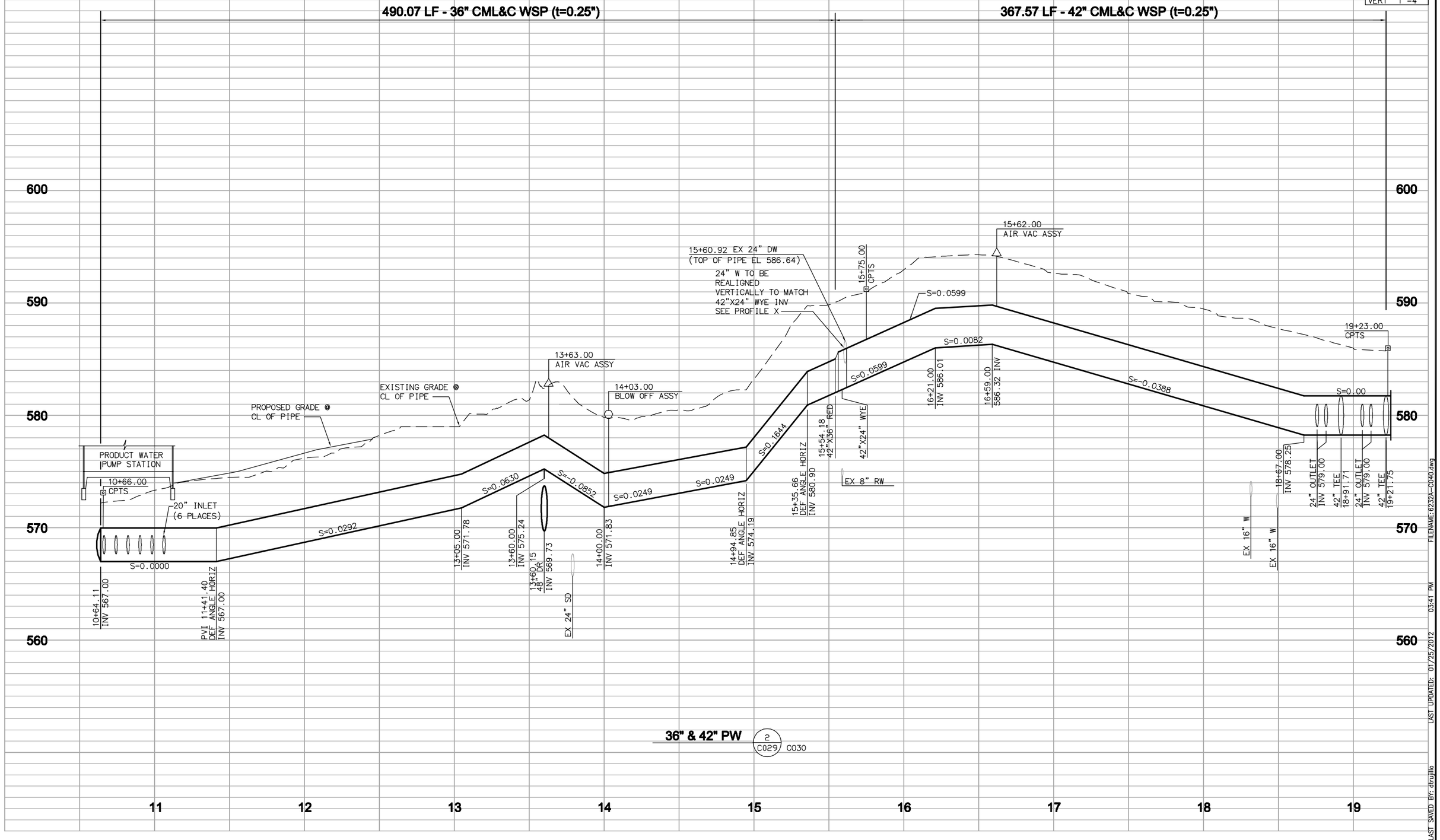

FILENAME: 6232A-C040.dwg
LAST UPDATED: 01/25/2012 03:41 PM
LAST SAVED BY: dtrujillo

No.	DATE	REVISIONS	APPROVED

DESIGNED: CBH
DRAWN: DDT
CHECKED: CLM

RBF CONSULTING

carollo

IRVINE RANCH WATER DISTRICT

COREY HESS	RCE NO. 68499	PROJECT ENGINEER	DATE
CINDY MILLER	RCE NO. 58116	PROJECT MANAGER	DATE
PATRICIA UEMATSU	RCE NO. 36762	PRINCIPAL ENGINEER	DATE

IRVINE RANCH WATER DISTRICT
BAKER WATER TREATMENT PLANT
PROJECT NO. 11218

YARD PIPING PROFILES V

DRAWING
C040
SHEET
96 OF **632**

SCALE
HORIZ 1"=30'
VERT 1"=4'

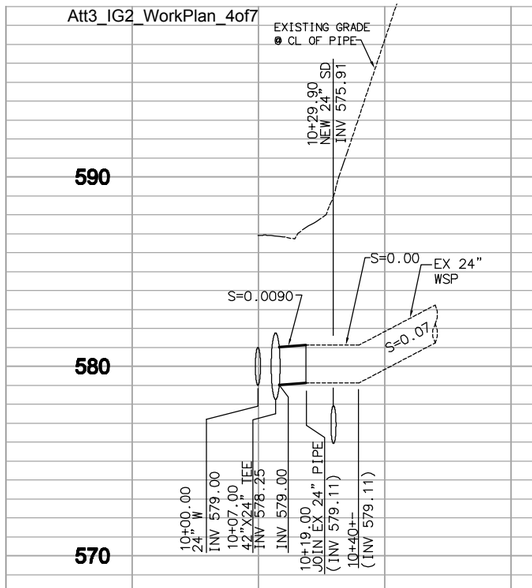

TANK PIPELINE LINE "A" (A / C030)

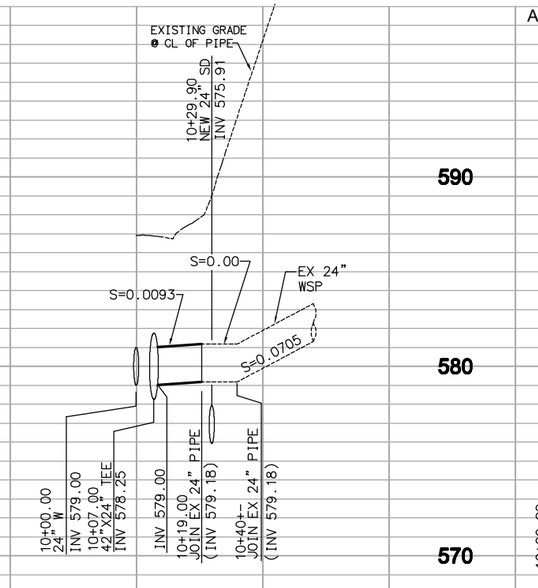

TANK PIPELINE LINE "B" (B / C030)

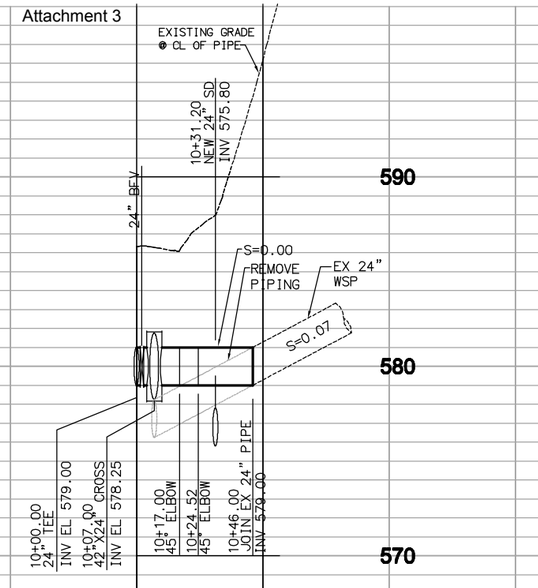

TANK PIPELINE LINE "C" (C / C030)

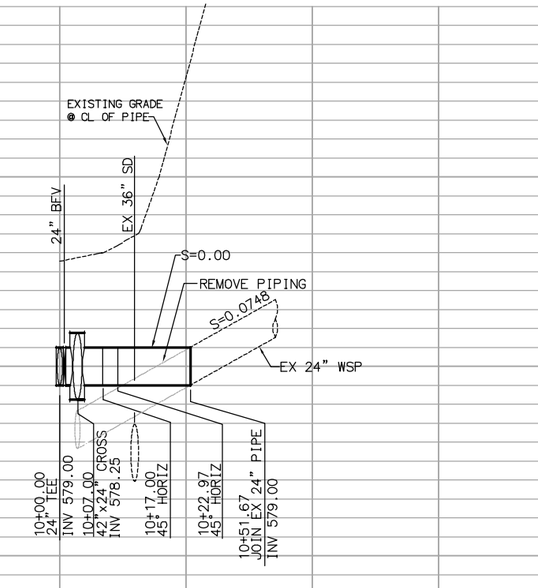

TANK PIPELINE LINE "F" (F / C030)

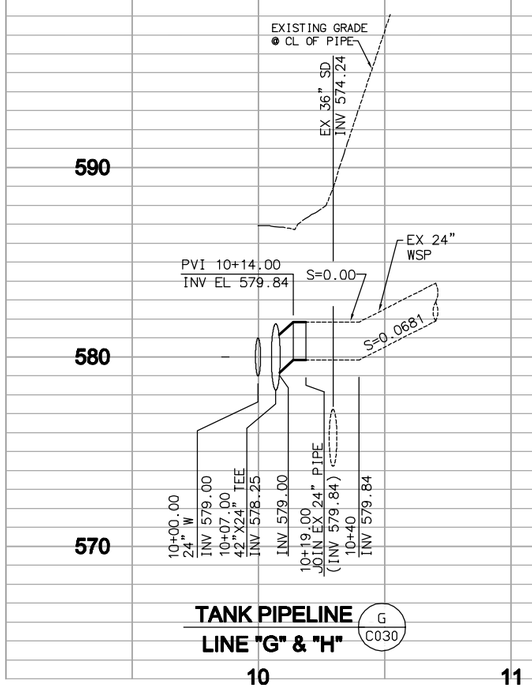

TANK PIPELINE LINE "G" & "H" (G / C030)

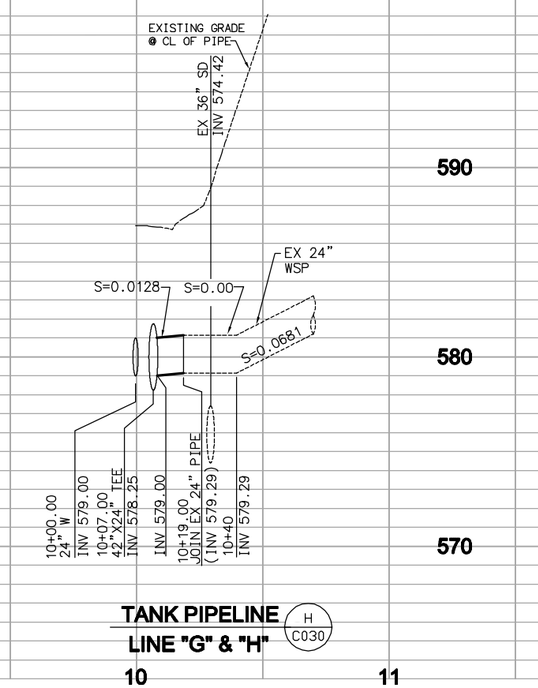

TANK PIPELINE LINE "G" & "H" (H / C030)

No.	DATE	REVISIONS	APPROVED

DESIGNED: CBH
DRAWN: DDT
CHECKED: CLM

RBF CONSULTING

carollo

IRVINE RANCH WATER DISTRICT

COREY HESS	RCE NO. 68499	PROJECT ENGINEER	DATE
CINDY MILLER	RCE NO. 58116	PROJECT MANAGER	DATE
PATRICIA UEMATSU	RCE NO. 36762	PRINCIPAL ENGINEER	DATE

IRVINE RANCH WATER DISTRICT
BAKER WATER TREATMENT PLANT
PROJECT NO. 11218

YARD PIPING PROFILES VI

DRAWING C041

LAST SAVED BY: chess LAST UPDATED: 01/17/2012 08:30 PM FILENAME: 6232A-C041.dwg

SCALE
HORIZ 1"=30'
VERT 1"=4'

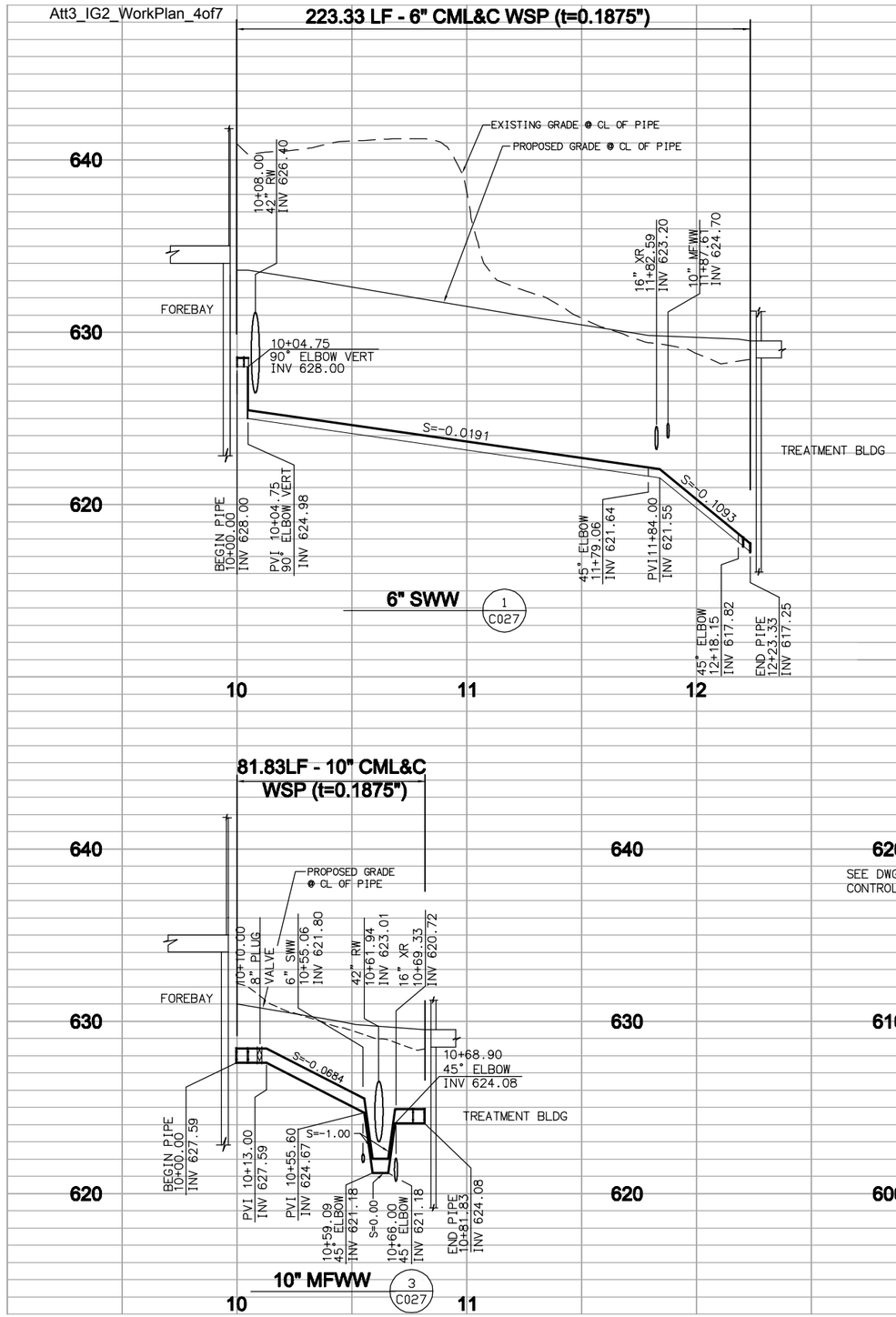

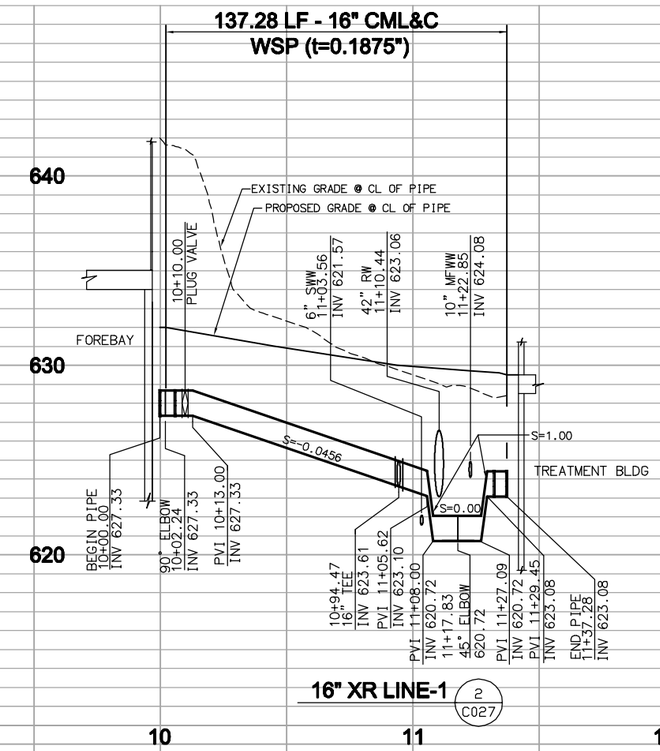

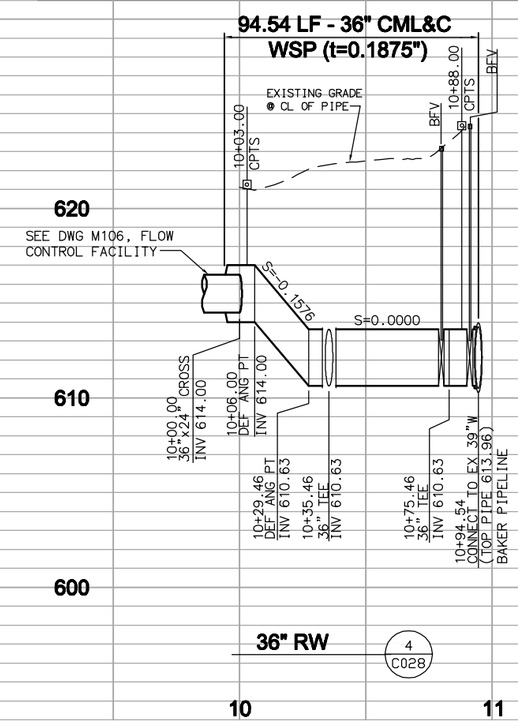

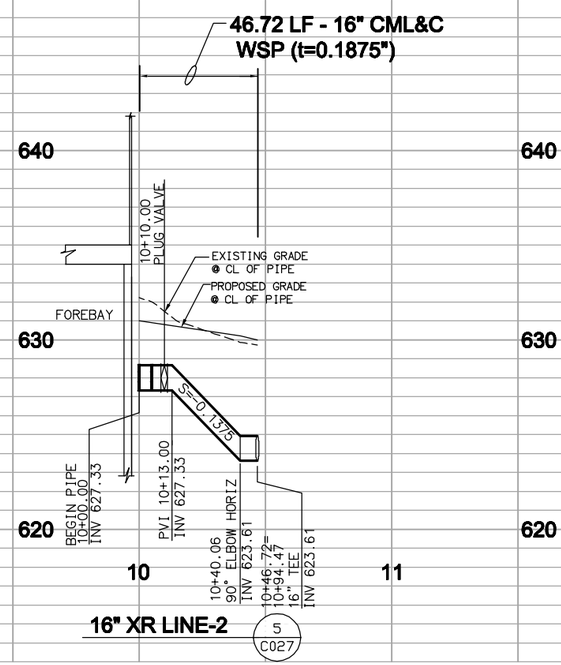

No.	DATE	REVISIONS	APPROVED

DESIGNED: CBH
DRAWN: DDT
CHECKED: CLM

RBF CONSULTING
carollo
IRVINE RANCH WATER DISTRICT

COREY HESS	RCE NO. 68499	PROJECT ENGINEER	DATE
CINDY MILLER	RCE NO. 58116	PROJECT MANAGER	DATE
PATRICIA UEMATSU	RCE NO. 36762	PRINCIPAL ENGINEER	DATE

IRVINE RANCH WATER DISTRICT
BAKER WATER TREATMENT PLANT
PROJECT NO. 11218

YARD PIPING PROFILES VII

DRAWING C042
SHEET 98 OF 632

SCALE
HORIZ 1"=30'
VERT 1"=4'

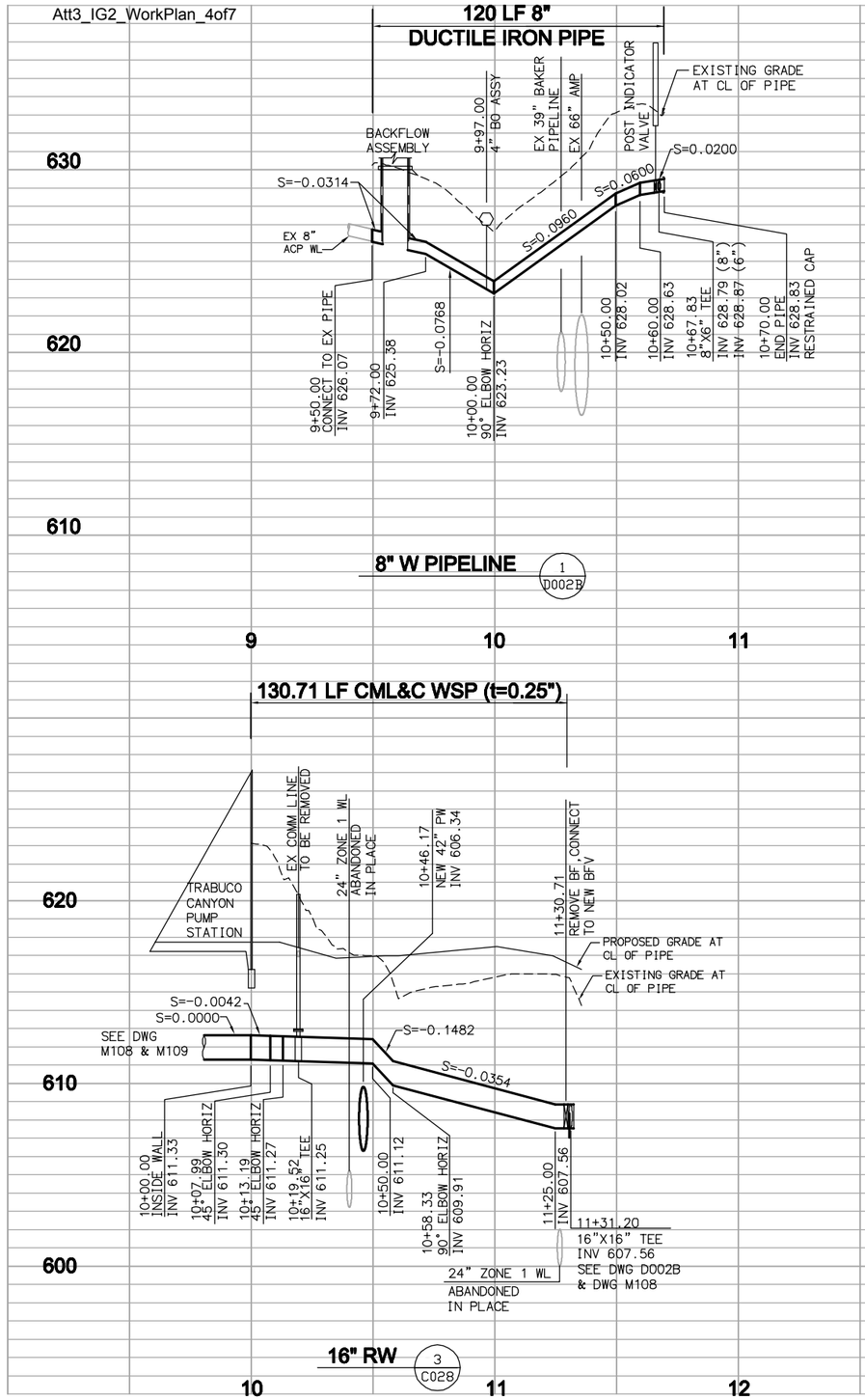

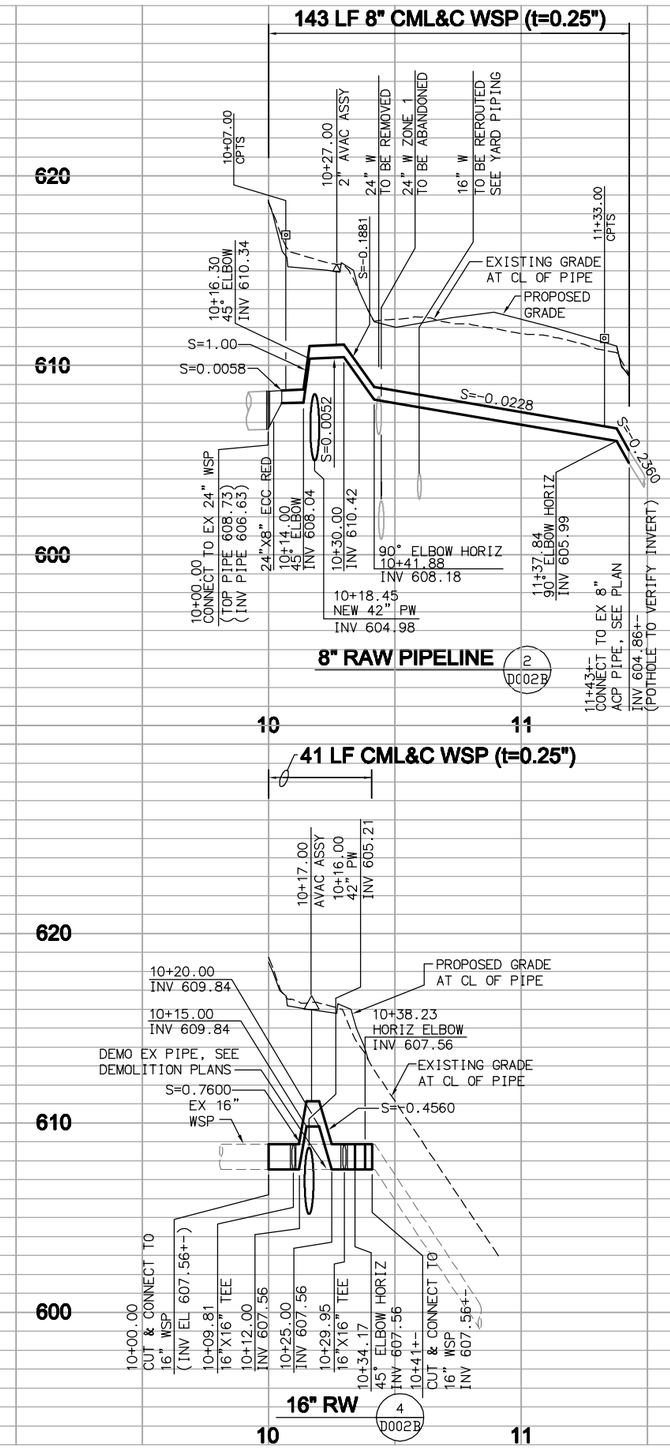

FILENAME: 62J2A-C043.dwg
LAST UPDATED: 01/17/2012 08:38 PM
LAST SAVED BY: chess

No.	DATE	REVISIONS	APPROVED

DESIGNED: CBH
DRAWN: DDT
CHECKED: CLM

RBF CONSULTING

carollo

IRVINE RANCH WATER DISTRICT

COREY HESS	RCE NO. 68499	PROJECT ENGINEER	DATE
CINDY MILLER	RCE NO. 58116	PROJECT MANAGER	DATE
PATRICIA UEMATSU	RCE NO. 36762	PRINCIPAL ENGINEER	DATE

IRVINE RANCH WATER DISTRICT
BAKER WATER TREATMENT PLANT
PROJECT NO. 11218

YARD PIPING PROFILES VIII

DRAWING C043

SHEET 99 OF 632

SCALE
HORIZ 1"=40'
VERT 1"=8'

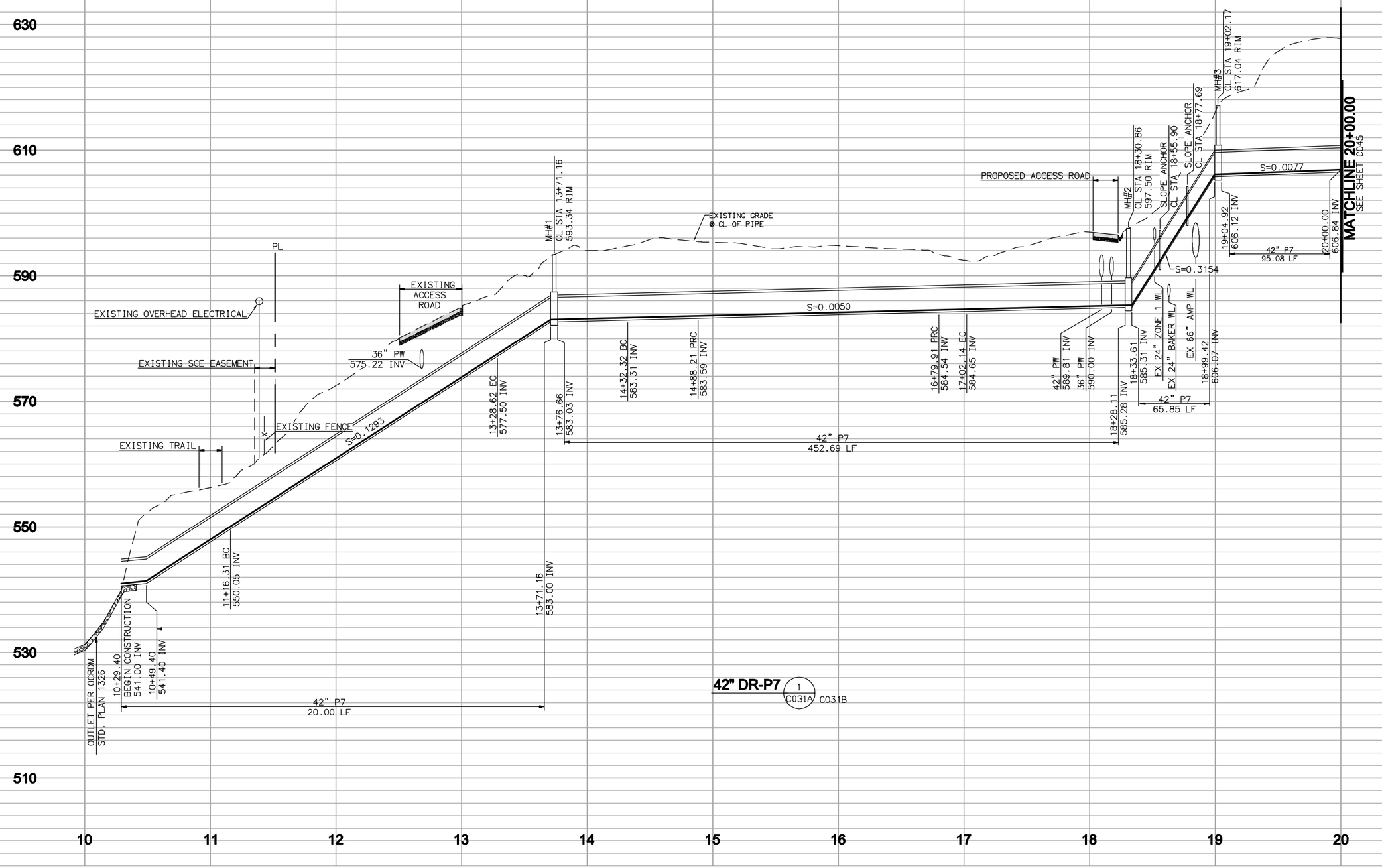

FILENAME: 6232A-C044.dwg
LAST UPDATED: 01/31/2012 05:01 PM
LAST SAVED BY: chess

No.	DATE	REVISIONS	APPROVED

DESIGNED: CBH
DRAWN: SMC
CHECKED: CLM

RBF CONSULTING

carollo

IRVINE RANCH WATER DISTRICT

COREY HESS	RCE NO. 68499	PROJECT ENGINEER	DATE
CINDY MILLER	RCE NO. 58116	PROJECT MANAGER	DATE
PATRICIA UEMATSU	RCE NO. 36762	PRINCIPAL ENGINEER	DATE

IRVINE RANCH WATER DISTRICT
BAKER WATER TREATMENT PLANT
PROJECT NO. 11218

OVERFLOW DRAINAGE PROFILE I

DRAWING
C044
SHEET
100 OF 632

SCALE
HORIZ 1"=40'
VERT 1"=8'

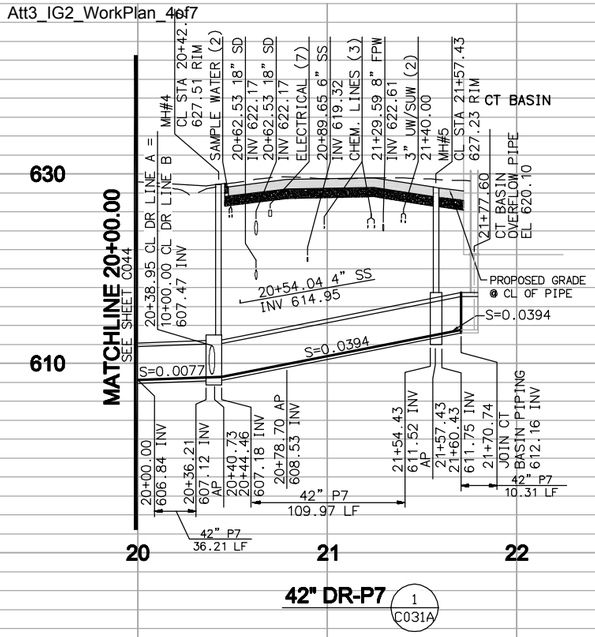

42" DR-P7 (1 / C031A)

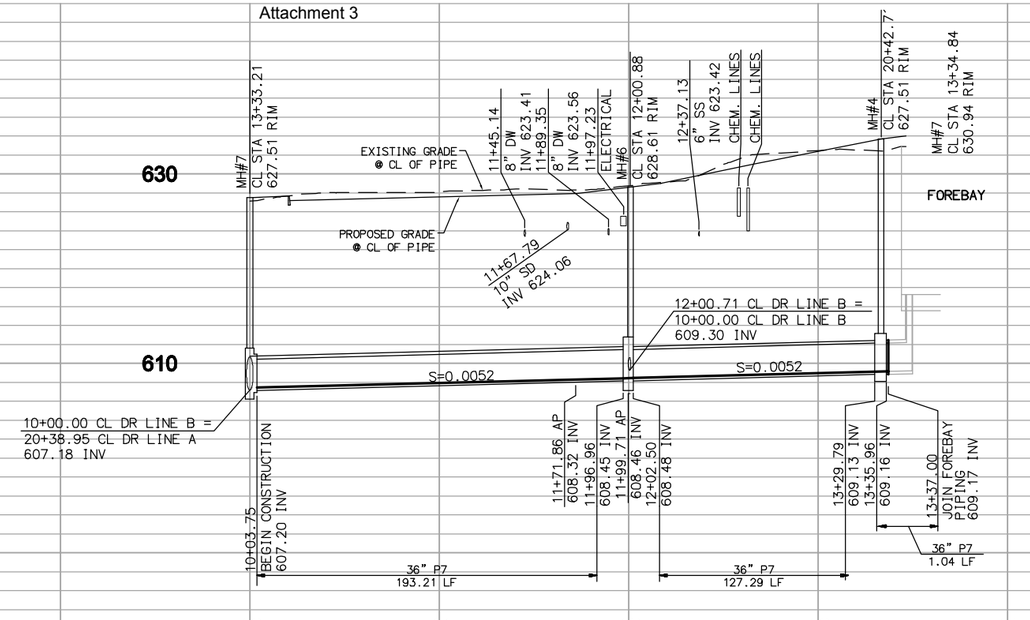

36" DR-P7 (2 / C031A)

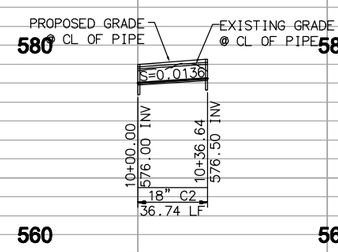

SD LINE A (1 / C502)

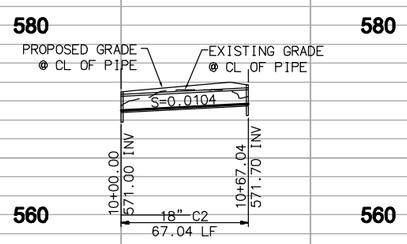

SD LINE B (2 / C502)

FILENAME: 6232A-C045.dwg
LAST UPDATED: 01/18/2012 08:42 AM
LAST SAVED BY: scook

No.	DATE	REVISIONS	APPROVED

DESIGNED: CBH
DRAWN: SMC
CHECKED: CLM

RBF CONSULTING

carollo

IRVINE RANCH WATER DISTRICT

COREY HESS	RCE NO. 68499	PROJECT ENGINEER	DATE
CINDY MILLER	RCE NO. 58116	PROJECT MANAGER	DATE
PATRICIA UEMATSU	RCE NO. 36762	PRINCIPAL ENGINEER	DATE

IRVINE RANCH WATER DISTRICT
BAKER WATER TREATMENT PLANT
PROJECT NO. 11218

OVERFLOW DRAINAGE PROFILE II

DRAWING
C045
SHEET
101 OF **632**

SCALE
HORIZ 1"=30'
VERT 1"=4'

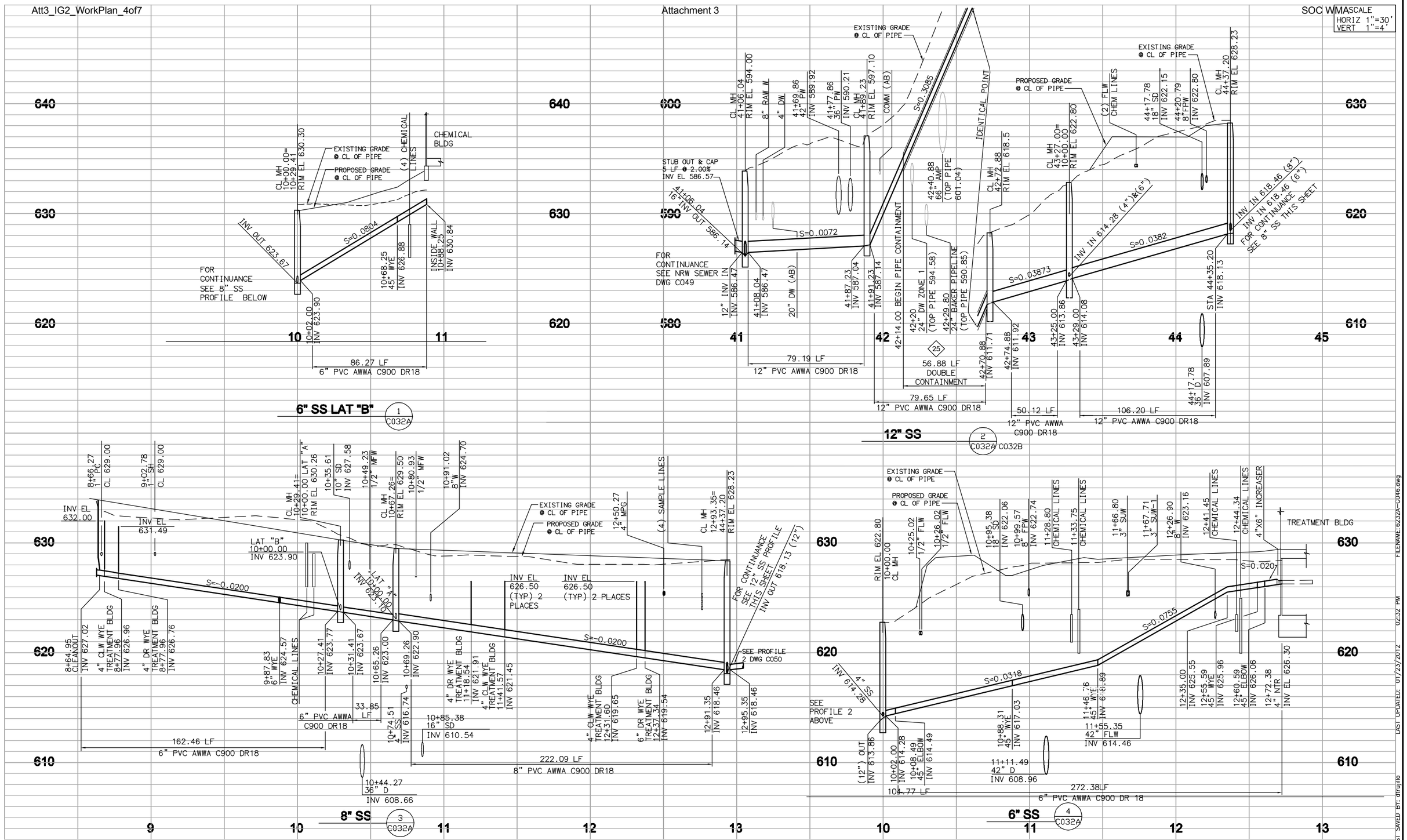

No.	DATE	REVISIONS	APPROVED

DESIGNED: CBH
DRAWN: DDT
CHECKED: CLM

RBF CONSULTING

carollo

IRVINE RANCH WATER DISTRICT

COREY HESS	RCE NO. 68499	PROJECT ENGINEER	DATE
CINDY MILLER	RCE NO. 58116	PROJECT MANAGER	DATE
PATRICIA UEMATSU	RCE NO. 36762	PRINCIPAL ENGINEER	DATE

IRVINE RANCH WATER DISTRICT
BAKER WATER TREATMENT PLANT
PROJECT NO. 11218

SEWER PIPELINE PROFILES

DRAWING
C046
SHEET
102 OF 632

LAST SAVED BY: drujillo
LAST UPDATED: 01/23/2012 02:32 PM
FILENAME:6232A-C046.dwg

SCALE
HORIZ 1"=30'
VERT 1"=4'

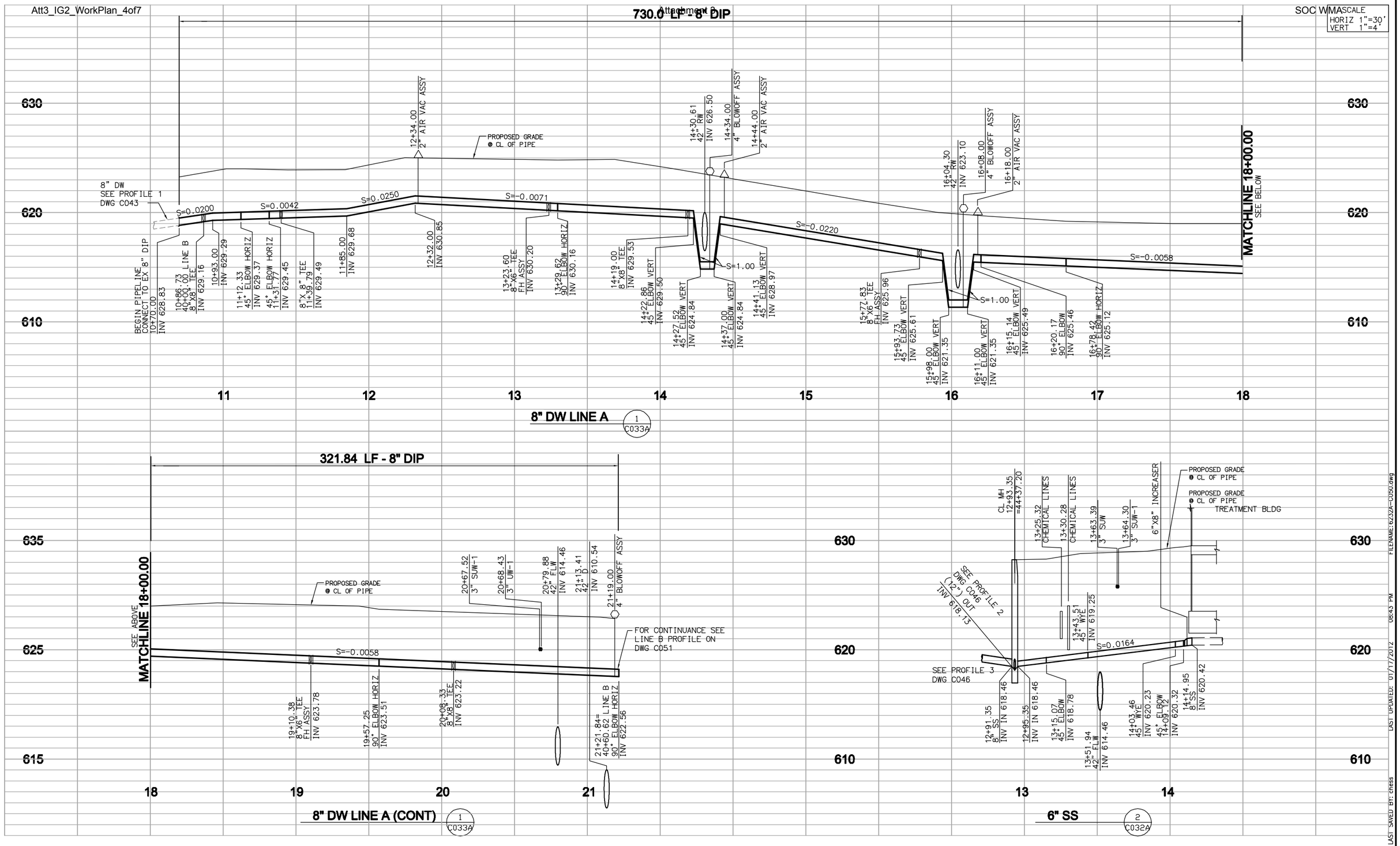

FILENAME: 6232A-C050.dwg
LAST UPDATED: 01/17/2012 08:43 PM
LAST SAVED BY: chess

No.	DATE	REVISIONS	APPROVED

DESIGNED: CBH
DRAWN: DDT
CHECKED: CLM

RBF CONSULTING
carollo
IRVINE RANCH WATER DISTRICT

COREY HESS	RCE NO. 68499	PROJECT ENGINEER	DATE
CINDY MILLER	RCE NO. 58116	PROJECT MANAGER	DATE
PATRICIA UEMATSU	RCE NO. 36762	PRINCIPAL ENGINEER	DATE

IRVINE RANCH WATER DISTRICT
BAKER WATER TREATMENT PLANT
PROJECT NO. 11218

FIRE PROTECTION WATER PROFILES-1

DRAWING
C050
SHEET
106 OF 632

SCALE
HORIZ 1"=30'
VERT 1"=4'

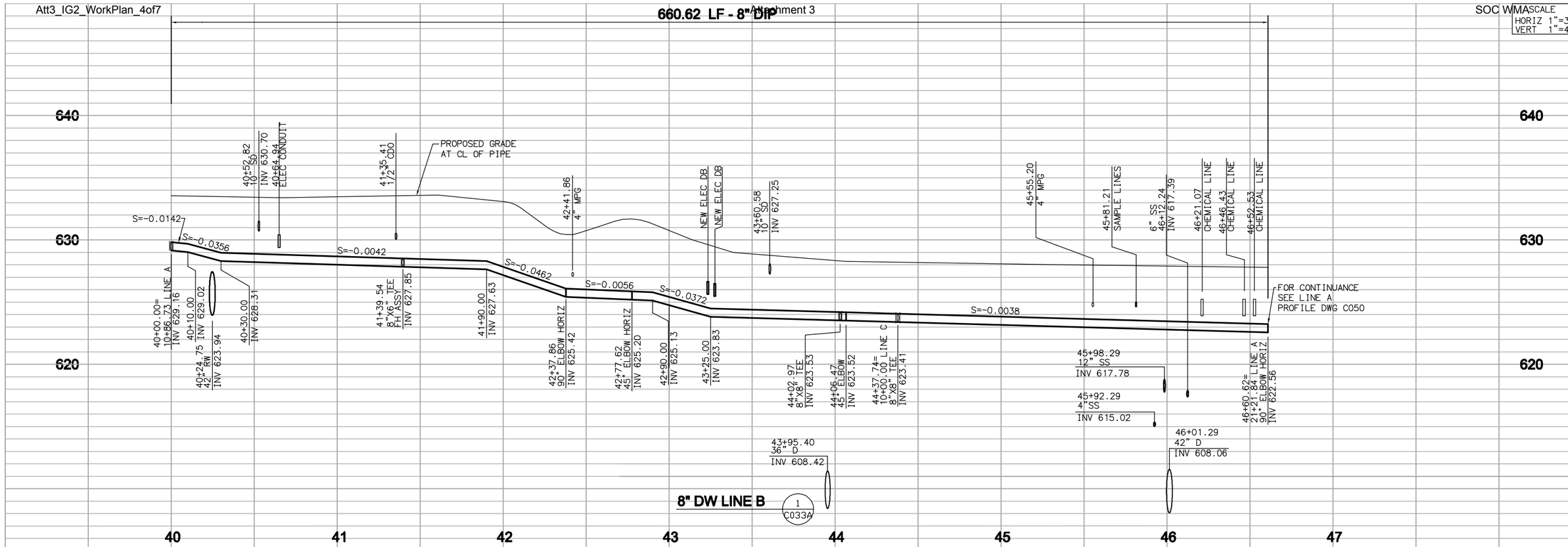

No.	DATE	REVISIONS	APPROVED

DESIGNED: CBH
DRAWN: DDT
CHECKED: CLM

RBF CONSULTING
carollo
IRVINE RANCH WATER DISTRICT

COREY HESS	RCE NO. 68499	PROJECT ENGINEER	DATE
CINDY MILLER	RCE NO. 58116	PROJECT MANAGER	DATE
PATRICIA UEMATSU	RCE NO. 36762	PRINCIPAL ENGINEER	DATE

IRVINE RANCH WATER DISTRICT
BAKER WATER TREATMENT PLANT
PROJECT NO. 11218

FIRE PROTECTION WATER PROFILES-II

DRAWING
C051
SHEET
107 OF **632**

LAST SAVED BY: drujillo LAST UPDATED: 01/23/2012 01:53 PM FILENAME:6232A-C051.dwg

ARCHITECTURAL ABBREVIATIONS

A.B.	ANCHOR BOLT
A.C.	AIR CONDITIONING
ACST	ACOUSTIC
ADJ	ADJUSTABLE
ADJAC	ADJACENT
AGGR	AGGREGATE
ALT	ALTERNATE
ALUM	ALUMINUM
AMP	AMPERE
APPD	APPROVED
APPROX	APPROXIMATE
APT	APARTMENT
ARCH	ARCHITECT(URAL)
ASPH	ASPHALT
ASSN	ASSOCIATION
ASTM	AMERICAN SOCIETY FOR TESTING MATERIALS
AVG	AVERAGE
BA	BATH
BD	BOARD
BLDG	BUILDING
BLK	BLOCK
BLT-IN	BUILT IN
BM	BEAM
BOT	BOTTOM
BOS	BOTTOM OF STRUTURAL
BRFT	BREAKFAST
BRG	BEARING
BRKT	BRACKET
BSMT	BASEMENT
BTR	BETTER
BTU	BRITISH THERMAL UNIT
CAB	CABINET
CEM	CEMENT
CFM	CUBIC FEET PER MINUTE
CHIMY	CHIMNEY
C.I.	CAST IRON
CLG	CEILING
CLKG	CAULKING
CLO	CLOSET
CLR	CLEAR
CO	CLEAN OUT
COL	COLUMN
CONC	CONCRETE
CONST	CONSTRUCTION
CONT	CONTINUE/CONTINUOUS
C.T.	COOK TOP
CTR	COUNTER
CU	CUBIC
CL	CENTER LINE\
DBL	DOUBLE
DBLHG	DOUBLE HUNG WINDOW
DEPT	DEPARTMENT
DTL	DETAIL
D.F.	DOUGLAS FIR
D.F.C.R.	DOUG. FIR COASTAL REGION
D.F.P.A.	DOUG. FIR PLYWOOD ASSN.
DIAG	DIAGONAL
DIAM	DIAMETER
DIM	DIMENSION
D.L.	DEAD LOAD
DN	DOWN
DR	DOOR
DINING	DINING ROOM
DRWG	DRAWING
DS	DOWNSPOUT
D.W.	DISHWASHER
EA	EACH
EL	ELEVATION (GRADE OR HEIGHT
ELEC	ELECTRICAL
ELEV	ELEVATION
ENCL	ENCLOSURE
ENGR	ENGINEER
EQ	EQUAL
EQUIP	EQUIPMENT
E.W.W.M.	ELECTRIC WELDED WIRE MESH
EXCAV	EXCAVATION
E	EXISTING
EXP	EXPOSED CONSTRUCTION
F.A.U.	FORCED AIR UNIT
F.D.	FLOOR DRAIN
FDN	FOUNDATION
FF	FINISH FLOOR
FG	FINISH GRADE
FIN	FINISH
F	FIXED GLASS WINDOW
FIXT	FIXTURE
FLSH'G	FLASHING
FL	FLOW LINE
FLR	FLOOR
FLUOR	FLUORESCENT
FOC	FACE OF CONCRETE
FOM	FACE OF MASONRY
FOS	FACE OF STUD
FRMG	FRAMING
FS	FINISH SURFACE
F.S.	FLOOR SINK
FT OR '	FOOT/FEET
FTG	FOOTING
FUR	FURRED/FURRING
GA	GAUGE
GAL	GALLON
GALV	GALVANIZE
G.I.	GALVANIZE IRON
GL	GLASS
GL LAM	GLUE LAMINATED
GND	GROUND
GR	GRADE
GYP	GYPSUM
HB	HOSE BIBB
H.C.	HOLLOW CORE
HDR	HEADER
HDW	HARDWARE
HGT	HEIGHT
HORIZ	HORIZONTAL
HP	HORSEPOWER
HR	HOUR
HW	HOT WATER
I.D.	INSIDE DIAMETR
IN OR "	INCH
INFO	INFORMATION
INSUL	INSULATION/INSULATE
INT	INTERIOR
JST	JOIST
JT	JOINT
KIT	KITCHEN
KW	KILOWATT
LAM	LAMINATE
LAV	LAVATORY
LB OR #	POUND
LIN	LINEAL
L.L.	LIVE LOAD
LIVING	LIVING ROOM
LT	LIGHT
L/T	LAUNDRY TRAY
MAS	MASONRY
MATL	MATERIAL
MAX	MAXIMUM
MC	MEDICINE CABINET
MECH	MECHANICAL
MEZZ	MEZZANINE
MIN	MINIMUM
MISC	MISCELLANEOUS
NAT	NATURAL
NG	NATURAL GRADE
NIC	NOT IN CONTRACT
NO	NUMBER
NTS	NOT TO SCALE
OA	OVERALL
O.C.	ON CENTER
O.D.	OUTSIDE DIAMETER
OFF	OFFICE
OPNG	OPENING
ORIG	ORIGINAL
OZ	OUNCE
PART	PARTITION
PCF OT	POUNDS PER CUBIC FOOT
PERP	PERPENDICULAR
PLAS	PLASTER
PLMBG	PLUMBING
PLYWD	PLYWOOD
PNL	PANEL
PR	PAIR
PROP	PROPERTY
PSF	POUNDS PER SQUARE FOOT
PSI	POUNDS PER SQUARE INCH
P.T.	PRESSURE TREATED
P.V.C.	POLY VINYL CHLORIDE
%	PERCENT
PL	PLATE
R	RISER
RAD	RADIUS
RAFT	RAFTER
RD	ROAD
RECP	RECEPTACLE
RECT	RECTANGULAR
REF	REFRIGERATOR
REG	REGISTER
REINF	REINFORCE
REQD	REQUIRED
RF	ROOF
RM	ROOM
R.S.	RESAWN
RWD	REDWOOD
S.C.	SOLID CORE
SCH	SCHEDULE
SCRN	SCREEN
SDG	SIDING
SECT	SECTION
SEL	SELECT
SHLFS	SHELVES
SHT	SHEET
SHTG	SHEATHING
SIM	SIMILAR
SLDG	SLIDING GLASS DOOR
SL	SLIDING GLASS WINDOW
SPEC	SPECIFICATION
SQ	SQUARE
SS	STAINLESS STEEL
ST	STREET
STD	STANDARD
STG	STORAGE
STIFF	STIFFNER
STL	STEEL
STR	STRUCTURAL
STWY	STAIRWAY
SUB	SUBSTITUTE
SUP	SUPPLY
SUR	SURFACE
SW	SWITCH
SYM	SYMMETRICAL
SYS	SYSTEM
SIS	SURFACE ONE SIDE
S2S	SURFACE TWO SIDES
S4S	SURFACE FOUR SIDES
TC	TOP OF CURB
TEL	TELEPHONE
TEMP	TEMPERED
T & G	TONGUE AND GROOVE
THK	THICK
THRU	THROUGH
TP	TOP OF PAVING
T/S	TUB WITH SHOWER
TW	TOP OF WALL
TYP	TYPICAL
ULT	ULTIMATE
UNFIN	UNFINISHED
UR	URINAL
UTL	UTILITIES
VERT	VERTICAL
VG	VERTICAL GRAIN
VOL	VOLUME
VOLT	VOLTAGE
W/	WITH
WC	WATER CLOSET
WD	WOOD
W.H.	WATER HEATER
W/O	WITHOUT
W.P.	WATERPROOF
W.S.	WEATHERSTRIP
WT	WEIGHT
X	BY
YD	YARD

REFERENCE SYMBOLS

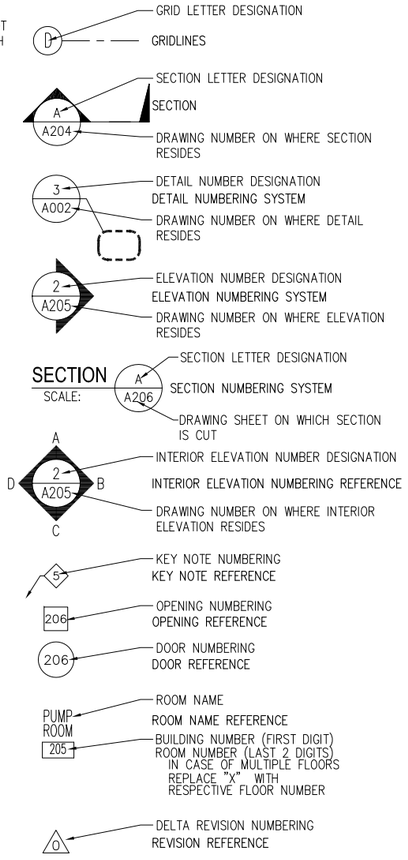

WALL SYMBOL LEGEND

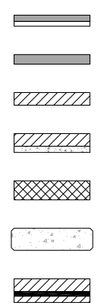

ARCHITECTURAL GENERAL NOTES

1. THE CONTRACTOR IS RESPONSIBLE FOR CHECKING ALL CONTRACT DOCUMENTS, FIELD CONDITIONS AND DIMENSIONS FOR ACCURACY, CONFIRMING THAT WORK IS BUILDABLE AS SHOWN BEFORE PROCEEDING WITH CONSTRUCTION. SHOULD ANY CONDITION ARISE WHERE THE INTENT OF THE DRAWINGS IS IN DOUBT OR WHERE THERE IS A DISCREPANCY BETWEEN THE DRAWINGS AND FIELD CONDITIONS THE PROJECT ENGINEER SHALL BE NOTIFIED IMMEDIATELY FOR CLARIFICATION.
2. CONTRACTOR SHALL VERIFY ALL FIELD DIMENSIONS AND CONDITIONS AND NOTIFY THE PROJECT ENGINEER OF ANY DISCREPANCIES AND SECURE CLARIFICATION BEFORE PROCEEDING WITH THE WORK IN QUESTION OR RELATED WORK.
3. DIMENSIONS TAKE PRECEDENCE. DIMENSIONS TYPICALLY TO COLUMN CENTER LINES, FACE OF STUDS, FACE OF CONCRETE OR MASONRY, OR AS NOTED ON DRAWINGS.
4. DRAWINGS SHALL NOT BE SCALED FOR DETERMINING DIMENSIONS. CONTRACTOR REQUIRING CLARIFICATION ON QUESTIONABLE DRAWING DIMENSION NOT NOTED SHALL CONTACT THE PROJECT ENGINEER PRIOR TO PROCEEDING WITH WORK RELATED TO THOSE DIMENSIONS.
5. ALL CLEAR (CLR.) DIMENSIONS ARE NOT ADJUSTABLE WITHOUT PRIOR APPROVAL FROM THE PROJECT ENGINEER.
6. ALL EXIT DOORS SHALL BE OPENABLE FROM THE INSIDE WITHOUT A KEY OR ANY SPECIAL KNOWLEDGE.
7. EXIT DOORS SHALL SWING IN THE DIRECTION OF EXIT TRAVEL WHEN SERVING ANY HAZARDOUS AREA OR WHEN SERVING AN OCCUPANT LOAD OF 10 OR MORE.
8. EVERY PASSAGE DOOR SHALL HAVE 32" MIN. CLEAR WIDTH.
9. HAND ACTIVATED DOOR OPENING HARDWARE SHALL BE CENTERED AT 34 INCHES ABOVE FINISHED FLOOR. LATCHING AND LOCKING DOORS THAT ARE HAND ACTIVATED AND WHICH ARE IN A PATH OF TRAVEL, SHALL BE OPERABLE WITH A SINGLE EFFORT BY LEVER TYPE HARDWARE, BY PANIC BARS, PUSH-PULL ACTIVATING BARS OR OTHER HARDWARE DESIGNED TO PROVIDE PASSAGE WITHOUT REQUIRING THE ABILITY TO GRASP THE OPENING HARDWARE, PER SECTION 1008.
10. MAXIMUM EFFORT TO OPERATE DOORS SHALL NOT EXCEED THE FOLLOWING:
    A. INTERIOR DOORS: 5 POUNDS
    B. EXTERIOR DOORS: 8.5 POUNDS
    C. FIRE DOORS: 15 POUNDS PER SECTION 1133B.2.
11. "ALIGN" SHALL MEAN ACCURATELY LOCATE FINISH FACES IN THE SAME PLANE.
12. "TYPICAL" OR "TYP." SHALL MEAN THE SAME OR REPRESENTATIVE FOR SIMILAR CONDITIONS THROUGHOUT UNLESS NOTED OTHERWISE.
13. SCHEDULE ALL INSPECTIONS 48 HOURS IN ADVANCE.
14. FIRE DEPARTMENT WILL NOT BE CALLED FOR INSPECTION UNTIL FIRE PROTECTION HAS VERIFIED THE SYSTEMS ARE FULLY OPERATIONAL. COSTS INCURRED FROM THE FIRE DEPARTMENT FOR THEIR RESPONSE PRIOR TO SYSTEM VERIFICATION CAUSING THEM TO RETURN FOR ADDITIONAL INSPECTIONS SHALL BE PAID FOR BY THE GENERAL CONTRACTOR.
15. ALL REQUESTS FOR SUBSTITUTION OF ITEMS SPECIFIED SHALL BE SUBMITTED IN WRITING. REQUESTS WILL BE CONSIDERED ONLY IF BETTER SERVICE, FACILITATES A MORE ADVANTAGEOUS DELIVERY DATE, OR A LOWER PRICE WITH CREDIT TO THE TENANT SACRIFICING QUALITY, APPEARANCE AND FUNCTION. THE PROJECT ENGINEER WILL NOT BE REQUIRED TO PROVE THAT A PRODUCT PROPOSED FOR SUBSTITUTION IS OR IS NOT OF EQUAL QUALITY TO THE PRODUCT SPECIFIED.
16. THE FLAME SPREAD CLASSIFICATIONS FOR INTERIOR WALLS AND CEILING FINISHES SHALL CONFORM WITH CALIFORNIA BUILDING CODE.
17. PRODUCTS AND MATERIALS REFERENCED BY BRAND NAME AND MANUFACTURER ESTABLISH THE LEVEL AND QUALITY. NO SUBSTITUTION WILL BE PERMITTED WITHOUT WRITTEN APPROVAL OF THE PROJECT ENGINEER. CONTRACTOR SHALL SUBMIT SUBSTITUTION REQUEST(S) TO SUBSTITUTE EQUIVALENT QUALITIES OF PRODUCT AND/OR MATERIALS FOR REVIEW AND APPROVAL. THIS SHALL INCLUDE BUT NOT BE LIMITED TO THE EFFECT OF SUBSTITUTION ON CONSTRUCTION TIME, CONSTRUCTION COST, THE AESTHETICS OF THE PROJECT AND RELATED WORK TO BE DONE OR ALREADY COMPLETED.
18. ALL GLASS WORK SHALL COMPLY WITH THE CALIFORNIA BUILDING CODE (LATEST APPROVED EDITION), OR LOCAL GOVERNING CODE.
19. TEMPERED OR SAFETY GLAZING SHALL BE INSTALLED PER CALIFORNIA BUILDING CODE.
20. THE CONTRACTOR SHALL FURNISH ALL MATERIALS, LABOR, EQUIPMENT, TRANSPORTATION AND SERVICES NECESSARY FOR THE SATISFACTORY COMPLETION OF THE WORK. CONSTRUCTION SHALL CONFORM WITH ALL APPLICABLE REQUIREMENTS OF ALL, LOCAL, STATE AND FEDERAL AUTHORITIES.
21. OWNER SHALL PAY FOR ALL PLAN CHECKING FEES. CONTRACTOR SHALL BE RESPONSIBLE FOR OBTAINING ALL REQUIRED PERMITS.
22. INSTALL METAL CORNER BEADS AT ALL EXPOSED WALLBOARD EDGE. INSTALL CASTING BEADS WHEREVER WALLBOARD, PLASTER, ETC, ABUTS A DISSIMILAR FINISH MATERIAL AND PROVIDE SEALANT AS REQUIRED.
23. AN ONE HOUR FIRE RESISTIVE OCCUPANCY SEPARATION SHALL NOT BE LESS THAN ONE HOUR FIRE RESISTIVE CONSTRUCTION. ALL OPENINGS IN SUCH SEPARATION SHALL BE PROTECTED BY A FIRE ASSEMBLY HAVING A ONE HOUR FIRE PROTECTION RATING.
24. PROVIDE SMOKE DAMPERS FOR ALL DUCT PENETRATION OF OCCUPANCY SEPARATION WALLS.
25. PROVIDE SMOKE DAMPERS FOR ALL DUCT PENETRATION OF OCCUPANCY SEPARATION WALLS.
26. AN APPROVED FIRE ALARM SYSTEM SHALL BE INSTALLED AS SET FORTH IN THE FIRE CODE.
27. WALL AND CEILING MATERIALS SHALL NOT EXCEED THE FLAME SPREAD CLASSIFICATIONS IN CALIFORNIA BUILDING CODE TABLE.
28. PROVIDE SIGNAGE AFFIXED TO THE SITE WALL AND THE STREET FACING BUILDING WALL OF EACH BUILDING IDENTIFYING THE LEGAL ADDRESS AND NAME OF EACH BUILDING.
29. PLEASE NOTE THAT ADDITIONAL ROOF PENETRATIONS MAY BE ADDED ABOVE THE GENERATOR AND CHEMICAL ROOMS AS PER THE EQUIPMENT MANUFACTURER TO VENTILATE EQUIPMENT.
30. PROVIDE WATER TIGHT PENETRATIONS AS REQUIRED IN ACCORDANCE WITH THE NATIONAL ROOFING CONTRACTORS ASSOCIATION PUBLISHED ROOFING GUIDELINES AND ARCHITECTURAL SHEET METAL SPECIFICATIONS PUBLISHED BY THE SHEET METAL AND AIR CONDITIONING CONTRACTORS NATIONAL ASSOCIATION AS IF REPEATED HEREIN.
31. ALL DOOR CONSTRUCTION SHALL BE CONSIDERED "MAXIMUM DUTY" AS DEFINED BY THE STEEL DOOR INSTITUTE WITH MINIMUM 14 GAUGE STEEL.
32. AT ALL HOLLOW METAL FRAMES, ALL HARDWARE/HINGE LOCATIONS TO BE PROVIDED WITH AUXILIARY STEEL REINFORCEMENT.
33. CONTRACTOR TO PROVIDE DESIGN OF A COMPLETE FIRE PROTECTION SYSTEM INCLUDING BUT NOT LIMITED TO PIPING, VALVES, HEADS, GAUGES, ETC. TO COMPLY WITH ALL APPLICABLE CODES. CONNECT SYSTEM TO EXISTING DISTRIBUTION. HEADS TO BE CENTERED IN CEILING TILES. OBTAIN APPROVAL FROM GOVERNING AUTHORITIES AND SUBMIT DESIGN TO ARCHITECT FOR REVIEW AND APPROVAL PRIOR TO COMMENCING WORK.
34. CONTRACTOR SHALL PROVIDE BACKING IN WALLS FOR MILLWORK, TOILET ACCESSORIES, HANGING WALL EQUIPMENT, ETC. WALLBACKING SHALL BE 16 GA. GALV. STEEL, 4" WIDE, COVERING (3) STUDS (MIN.) AND SCREWED TO STUDS. PROVIDE ALL NECESSARY HANGERS AND ALL OTHER SUPPORT FOR FIXTURES AND OTHER ITEMS REQUIRING THE SAME, COORDINATE WITH ALL TRADE CONTRACTORS PRIOR TO COMMENCING WORK.
35. FIRE EXTINGUISHERS SHALL BE LOCATED IN ACCORDANCE WITH ENFORCING FIRE AUTHORITY STANDARDS. CONTRACTOR TO VERIFY REQUIREMENTS AND LOCATION WITH FIRE MARSHAL – DETERMINED BY FIELD INSPECTION.
36. CONTRACTOR SHALL PROVIDE PRICING ALLOWANCE FOR REQUIRED BUILDING STANDARD FIRE EXTINGUISHERS.
37. PROVIDE BUILDING STANDARD EXIT SIGNS AT ALL EXITS AS REQUIRED BY CODE OR GOVERNING AGENCY.
38. PROVIDE FIRE PROTECTION AROUND ALL OUTLETS AND SWITCHES LOCATED IN RATED WALLS, INCLUDING CORE WALLS.
39. FIRE DEPARTMENT FINAL INSPECTION REQUIRED. SCHEDULE ALL INSPECTIONS 2 DAYS IN ADVANCE.
40.

NOTE:
1. CONTACTING DIG ALERT DOES NOT RELIEVE THE CONTRACTOR OF THE RESPONSIBILITY OF LOCATING THE EXISTING UTILITIES AND SERVICES.
2. IF CONSTRUCTION OCCURS MORE THAN ONE YEAR FROM THE DATE OF THE PLANS EXISTING UTILITIES SHALL BE RE-IDENTIFIED BY THE THE CONTRACTOR.

UNDERGROUND SERVICE ALERT
CALL: TOLL FREE
811
TWO WORKING DAYS BEFORE YOU DIG

FILENAME: A001 Arch General Notes.dwg
LAST UPDATED: 2/1/2012 10:15am
LAST SAVED BY: rcstensby

No.	DATE	REVISIONS	APPROVED

DESIGNED: RBF
DRAWN: rcs
CHECKED: wdg

RBF CONSULTING

carollo

IRVINE RANCH WATER DISTRICT

WILLIAM D. GRAEBER CA LIC NO. C11052 ARCHITECT DATE
CINDY MILLER RCE NO. 58116 PROJECT MANAGER DATE
PATRICIA UEMATSU RCE NO. 36762 PRINCIPAL ENGINEER DATE

STATE OF CALIFORNIA WILLIAM D. GRAEBER #C11052 Expires 5/31/2013 REGISTERED ARCHITECT

IRVINE RANCH WATER DISTRICT
BAKER WATER TREATMENT PLANT
PROJECT NO. 11218

ARCHITECTURAL GENERAL NOTES

DRAWING A001

SHEET 114 OF 632

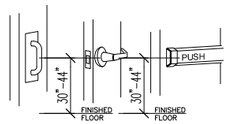

ACCEPTABLE DOOR HARDWARE AND MOUNTING HEIGHTS

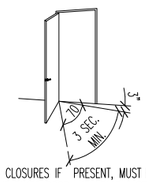

DOOR CLOSURES IF PRESENT, MUST BE SET SO THAT IT TAKES DOOR AT LEAST 3 SECONDS TO CLOSE FROM AN OPEN POSITION OF 70 DEGREES TO WITHIN 3" OF LATCH

KICK PLATE **DOOR CLOSURES**

ACCESSIBLE DOOR REQUIREMENTS | 1" | **51**

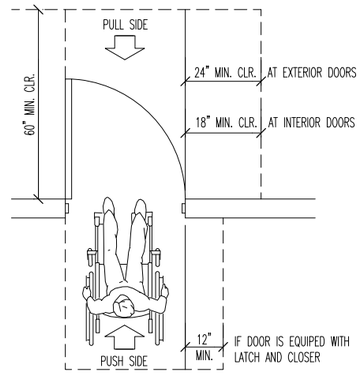

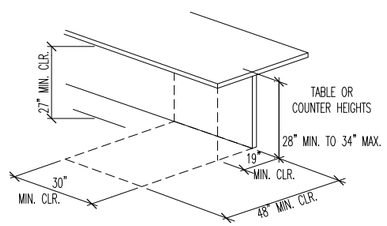

01.17.03 L.F N:\Architecture Detail Library\Details\Accessibility Details\accountertopclearance.dwg

ACCESSIBLE COUNTERTOP CLEARANCES | N.T.S. | **52**

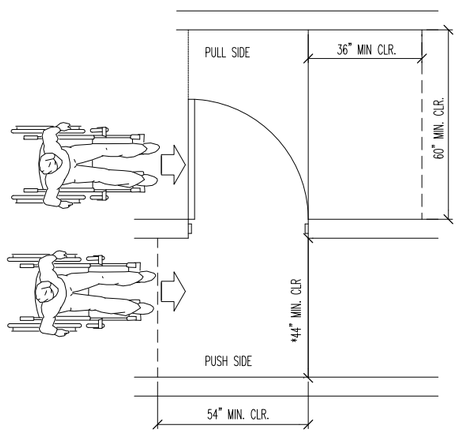

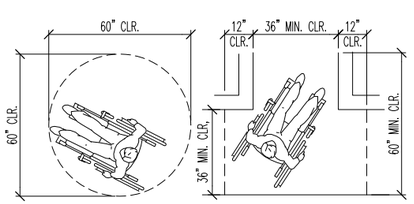

(A) 60 INCHES DIAMETER SPACE

(B) T-SHAPED SPACE FOR 180 DEGREE TURNS

WHEELCHAIR TURNING SPACE | 3/8" | **53**

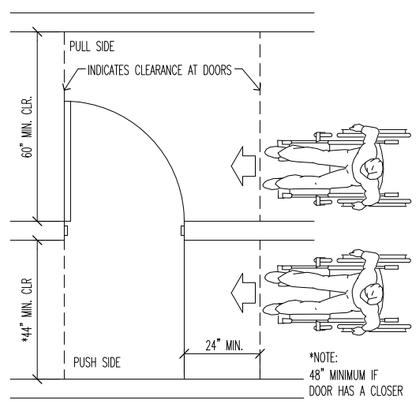

02-04-02 M.S. N:\Architecture Detail Library\Details\Accessibility Details\Handrail.dwg

DOOR LANDING CLEARANCE | 1/2" | **43**

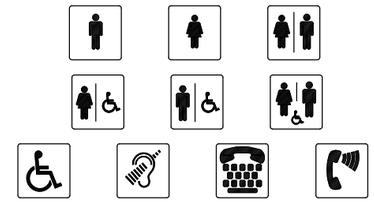

TYPICAL PICTOGRAMS

PICTOGRAMS
- PICTOGRAMS SHALL BE ACCOMPANIED BY THE EQUIVALENT VERBAL DESCRIPTION PLACED DIRECTLY BELOW PICTOGRAM
- THE BORDER DIMENSION OF THE PICTOGRAM SHALL BE 6" MINIMUM IN HEIGHT
- CHARACTERS AND SYMBOLS SHALL CONTRAST WITH THEIR BACKGROUND; EITHER LIGHT CHARACTERS ON A DARK BACKGROUND OR DARK CHARACTERS ON ON A LIGHT BACKGROUND

01.17.03 L.F N:\Architecture Detail Library\Details\Accessibility Details\accessiblesignage.dwg

ACCESSIBLE SIGNAGE | N.T.S. | **31**

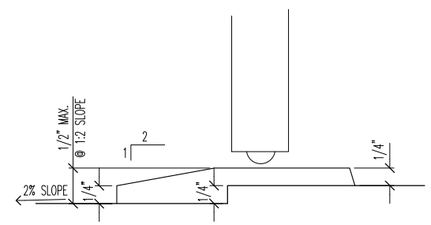

EXTERIOR

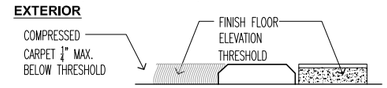

INTERIOR

MAT CARPETING MUST CONSIST OF:
- LEVEL LOOP
- TEXTURED LOOP
- LEVEL CUT PILE, OR
- LEVEL CUT/UNCUT PILE

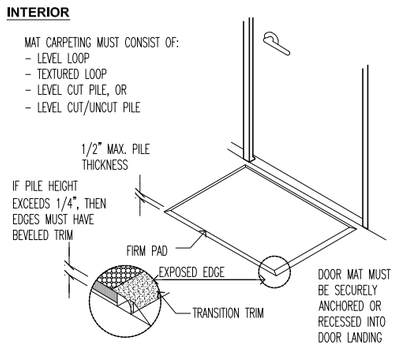

THRESHOLDS AND DOOR MATS AT DOORWAYS | N.T.S. | **33**

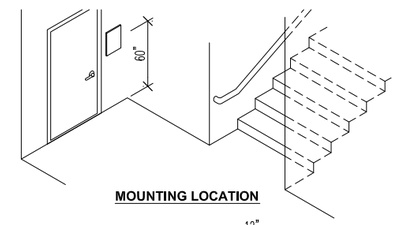

MOUNTING LOCATION

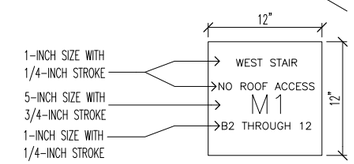

NOTE: THE INFORMATION ON THE SIGN MUST BE PRESENTED WITH RAISED ARABIC NUMERALS AND CORRESPONDING CALIFORNIA GRADE II BRAILLE. THE MEZZANINE LEVELS SHALL HAVE THE LETTER "M" PRECEDING FLOOR NUMBERS. BASEMENT LEVELS SHALL HAVE THE LETTER "B" PRECEDING THE FLOOR NUMBER.

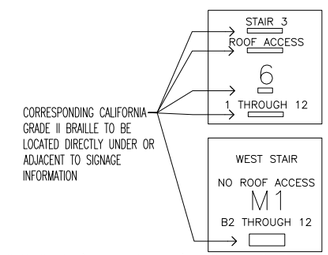

12-11-02 MRB N:\Architecture Detail Library\Details\Accessibility Details\stairwayidsign.dwg

STAIRWAY IDENTIFICATION SIGN | N.T.S. | **22**

WALL-SIGNAGE (TYP.).

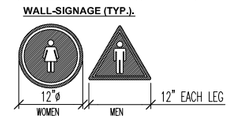

DOOR MOUNTED SIGNAGE (TYP.)

NOTE: PICTOGRAMS AND/OR LETTERING ARE NOT REQUIRED ON DOOR-MOUNTED SIGNAGE.

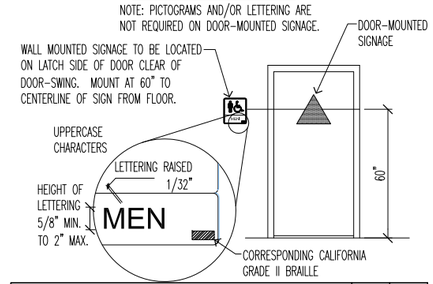

RESTROOM IDENTIFICATION SYMBOLS | N.T.S. | **23**

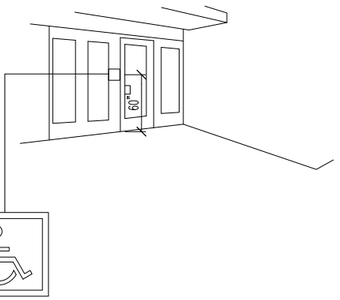

INTERNATIONAL SYMBOL OF ACCESSIBILITY

01.17.03 L.F N:\Architecture Detail Library\Details\Accessibility Details\bldgentrancesignage.dwg

ACCESSIBLE BUILDING ENTRANCE SIGNAGE | N.T.S. | **11**

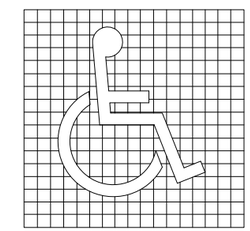

(A) SYMBOL PROPORTIONS

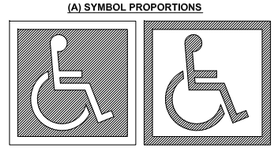

(B) DISPLAY CONDITIONS

07.17.03 MRB N:\Architecture Detail Library\Details\Accessibility Details\intlADASymb.dwg

INTERNATIONAL SYMBOL OF ACCESSIBILITY | N.T.S. | **12**

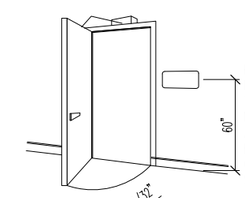

PERMANENT SIGNAGE TO BE INSTALLED ON THE WALL ADJACENT TO THE LATCH SIDE OF THE DOOR. MOUNTING LOCATION MUST ALLOW A PERSON TO APPROACH WITHOUT ENCOUNTERING PROTRUDING OBJECTS OR STANDING WITHIN THE SWING PATH OF THE DOOR.

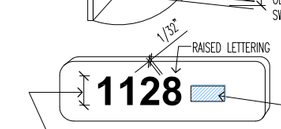

LETTERING AND NUMBERS SHALL BE RAISED 1/32", UPPER CASE, SANS SERIF TYPE AND SHALL BE ACCOMPANIED WITH CALIFORNIA GRADE II BRAILLE. RAISED CHARACTERS SHALL BE AT LEAST 5/8" HIGH, BUT NO HIGHER THAN 2".

01.17.03 M.R.B N:\Architecture Detail Library\Details\Accessibility Details\roomsignage.dwg

ROOM SIGNAGE | N.T.S. | **13**

FILENAME: A002 Accessibility Details.dwg
LAST UPDATED: 2/1/2012 10:15am
LAST SAVED BY: rcstensby

No.	DATE	REVISIONS	APPROVED

DESIGNED: RBF
DRAWN: rcs
CHECKED: wdg

RBF CONSULTING

carollo

IRVINE RANCH WATER DISTRICT

WILLIAM D. GRAEBER CA LIC NO. C11052 ARCHITECT DATE
CINDY MILLER RCE NO. 58116 PROJECT MANAGER DATE
PATRICIA UEMATSU RCE NO. 36762 PRINCIPAL ENGINEER DATE

STATE OF CALIFORNIA WILLIAM D. GRAEBER #C11052 EXPIRES 5/31/2013 REGISTERED ARCHITECT

IRVINE RANCH WATER DISTRICT
BAKER WATER TREATMENT PLANT
PROJECT NO. 11218

ACCESSIBILITY DETAILS

DRAWING A002
SHEET 115 OF 632

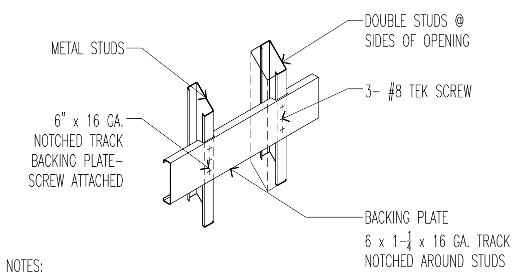

NOTES:

1. TYPE "A" BACKING TRACK FOR MISCELLANEOUS ITEMS; SURFACE MOUNTED MIRRORS, WASTE RECEPTACLES, TOWEL DISPENSERS, ETC. MAXIMUM WEIGHT - 50 POUNDS.
2. VERIFY LENGTH, HEIGHT, LOCATION OF BACKING PLATE AND NUMBER REQUIRED WITH ACCESSORY MANUFACTURERS.
3. USE #12 SELF TAPPING SHEET METAL SCREWS MINIMUM WHEN ATTACHING ITEMS TO BACKING PLATE. VERIFY ACTUAL REQUIREMENTS W/MANUFACTURERS.
4. WALL STUD FLANGES ARE CONTINUOUS.

Date/Creator Initials
N:\2010\2310004-Baker-WTP\Architecture\Current Task\Sheets\A003 Accessibility Details.dwg

STEEL BACKING PLATE - TYPE A	1 1/2"	51

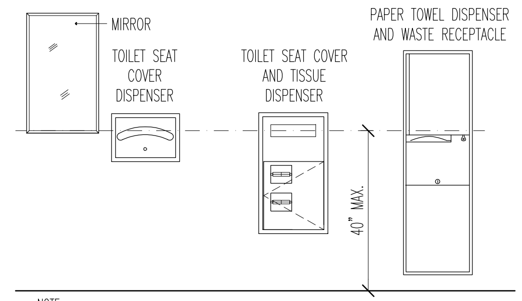

NOTE:
A. 30"x48" MIN. CLEAR FLOOR OR GROUND SPACE REQUIRED TO ALLOW FORWARD OR PARALLEL APPROACH TO ACCESSORIES
B. ALL OPERABLE PARTS OF FIXTURES AND ACCESSORIES TO BE LOCATED 40" MAX. ABOVE FINISH FLOOR
C. CONTROLS AND OPERATING MECHANISMS MUST OPERATE WITH ONE HAND AND NOT REQUIRE TIGHT GRASPING, PINCHING OR TWISTING OF WRIST
D. MAXIMUM 5 POUND FORCE TO OPERATE CONTROLS
E. LOCATE COAT HOOKS AND SHELVING WITHIN APPROPRIATE REACH RANGE (48" MAX. ABOVE FLOOR RECOMMENDED)

RESTROOM ACCESSORIES	1/2"	41

NOTES:
-REGARDLESS OF STALL CONFIGURATION, A 48" LONG MINIMUM CLEARANCE FLOOR SPACE SHALL BE PROVIDED IN FRONT OF THE WATER CLOSET.
-INTERIOR DIMENSIONS OF SINGLE ACCOMMODATION TOILET ROOMS SHALL INCLUDE A CLEAR FLOOR SPACE OF AT LEAST 60" IN DIAMETER OR A T-SHAPED CLEAR SPACE.
-NO DOOR MAY ENCROACH INTO THIS REQUIRED CLEAR SPACE BY MORE THAN 12".
-SIDE GRAB BARS IN SINGLE ACCOMMODATION TOILET ROOMS MUST BE INSTALLED SUCH THAT THE FRONT END OF THE BAR IS LOCATED A MINIMUM OF 54" FROM THE BACK WALL.

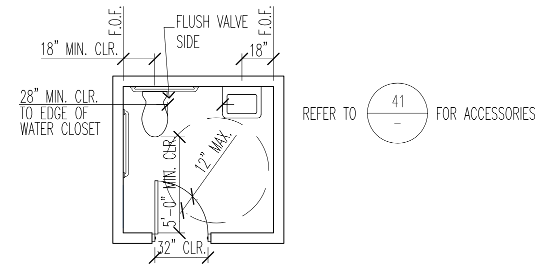

SINGLE ACCOMMODATION RESTROOM	N.T.S.	31

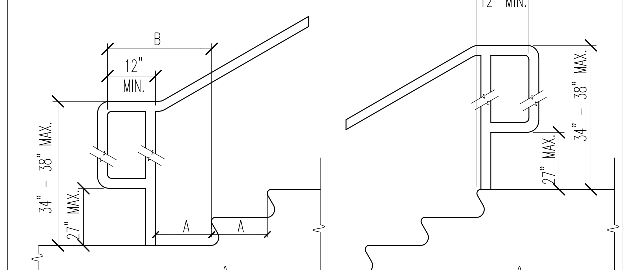

A - TREAD WIDTH
B - THE MINIMUM HANDRAIL EXTENSION OF 12 INCHES PLUS THE WIDTH OF TREAD REQUIRED AT EACH BOTTOM RISER

Y - THE MINIMUM HANDRAIL EXTENSION REQUIRED AT EACH TOP RISER

02-04-02 M.S. N:\Architecture Detail Library\Details\Accessibility Details\Handrail.dwg

HANDRAIL @ STAIRS	1/2"	21

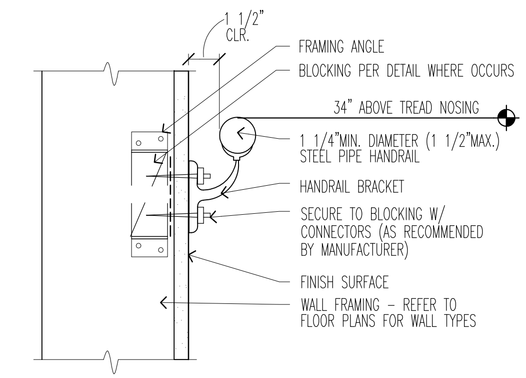

NOTE:
1) HANDRAIL TO HAVE SMOOTH SURFACE WITH NO SHARP CORNERS.
2) HANDRAILS TO ACCOMMODATE 50LBS./FT LATERAL LOAD.
3) SEE ARCHITECTURAL SHEET 51 & 52/A003 FOR SPECIFIC DESIGN.

HANDRAIL ATTACHMENT AT WALL	3"	11

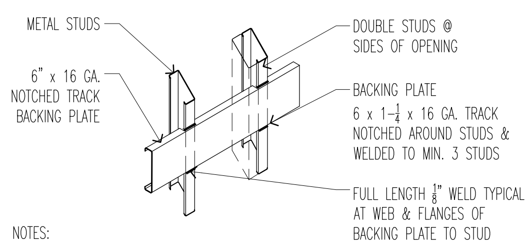

NOTES:

1. TYPE "B" BACKING TRACK FOR UPPER WALL HUNG CABINETS, BASE CABINETS, FULL HEIGHT CABINETS, FILM VIEWING COUNTERS, WALL HUNG BENCHES, HANDRAILS, GUARDRAILS, GRAB BARS, WALL HUNG EQUIPMENT, TOWEL BARS, ETC. MAXIMUM WEIGHT - 250 POUNDS PER FOOT.
2. VERIFY LENGTH, HEIGHT, LOCATION OF BACKING PLATE AND NUMBER REQUIRED WITH MANUFACTURER OF ITEMS IN NOTE 1.
3. USE #12 SELF-TAPPING SHEET METAL SCREWS MINIMUM WHEN ATTACHING ITEMS TO BACKING PLATE, VERIFY ACTUAL REQUIREMENTS WITH MANUFACTURERES.
4. WALL STUD FLANGES ARE CONTINUOUS.
5. PROVIDE BACKING TRACK AT WALL HUNG UNITS ONE AT TOP & ONE AT BOTTOM OF CABINETS

N:\2010\2310004-Baker-WTP\Architecture\Current Task\Sheets\A003 Accessibility Details.dwg

STEEL BACKING PLATE - TYPE B	1 1/2"	52

X=52" MINIMUM WHEN WATER CLOSETS ARE IN STALLS
X=54" MINIMUM WHEN WATER CLOSETS ARE NOT IN STALLS
(SUCH AS IN SINGLE ACOOMMODATION ROOMS OR OPEN TOILETING SITUATIONS)

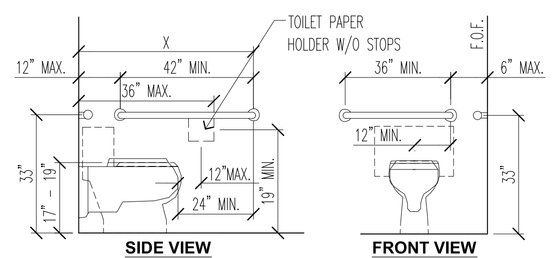

1. WATER CLOSET FLUSH VALVE CONTROLS, AND FAUCET AND OPERATING MECHANISM CONTROLS, SHALL BE OPERABLE WITH ONE HAND, SHALL NOT REQUIRE TIGHT GRASPING, PINCHING, OR TWISTING OF THE WRIST, AND SHALL BE MOUNTED NO MORE THAN 44" ABOVE THE FLOOR.
2. THE FORCE REQUIRED TO ACTIVATE WATER CLOSET AND URINAL FLUSH VALVE CONTROLS, AND FAUCET AND OPERATING MECHANISM CONTROLS, SHALL BE NO GREATER THAN 5 LBF. ELECTRONIC OR AUTOMATIC FLUSHING CONTROLS ARE ACCEPTABLE AND PREFERABLE.

WALL MOUNTED WATER CLOSETS	N.T.S.	42

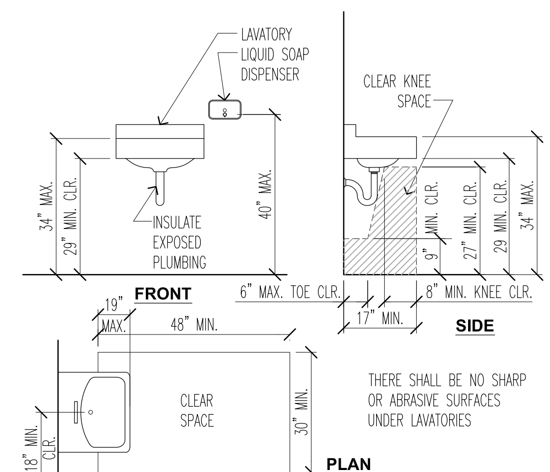

THERE SHALL BE NO SHARP OR ABRASIVE SURFACES UNDER LAVATORIES

N:\2010\2310004-Baker-WTP\Architecture\Current Task\Sheets\A003 Accessibility Details.dwg

TYPICAL ACCESSIBLE LAVATORY	1/2"	32

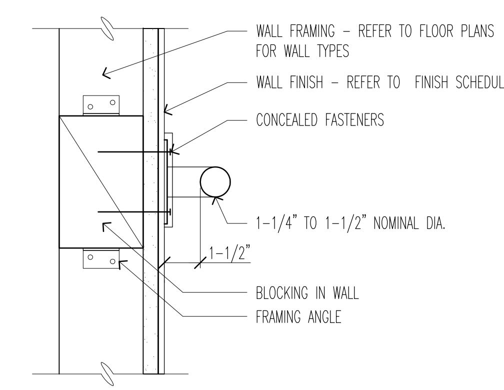

NOTES: EDGES ARE TO BE SMOOTH W/ A MINIMUM RADIUS OF 1/8".

01.17.03 MRB N:\Architecture Detail Library\Details\Accessibility Details\GRABAR.dwg

GRAB BAR ATTACHMENT	3"	22

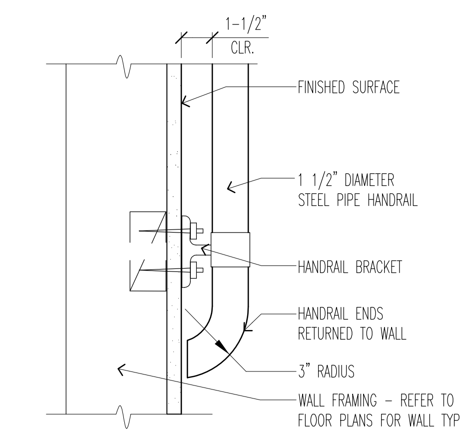

02-04-02 M.S. N:\Architecture Detail Library\Details\Accessibility Details\Handrail End.dwg

HANDRAIL END	3"	12

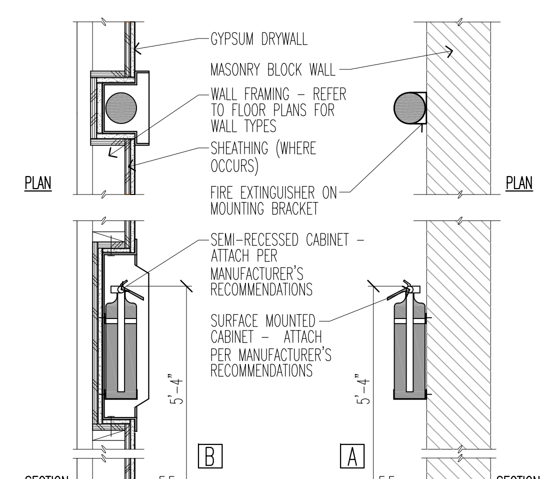

N:\2010\2310004-Baker-WTP\Architecture\Current Task\Sheets\A003 Accessibility Details.dwg

FIRE EXTINGUISHER CABINET/WALL MOUNTED	1"	33

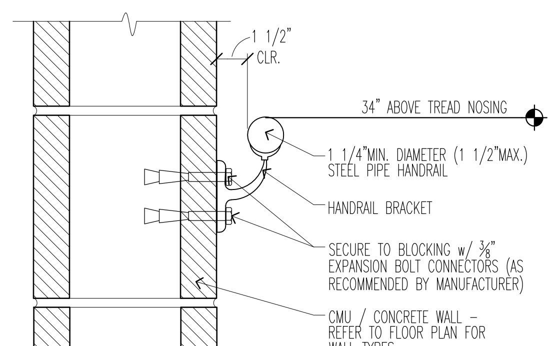

NOTE:
1) HANDRAIL TO HAVE SMOOTH SURFACE WITH NO SHARP CORNERS.
2) HANDRAILS TO ACCOMMODATE 50 LBS./FT LATERAL LOAD.

N:\2010\2310004-Baker-WTP\Architecture\Current Task\Sheets\A003 Accessibility Details.dwg

HANDRAIL ATTACHMENT AT CMU/CONCRETE WALL	3"	23

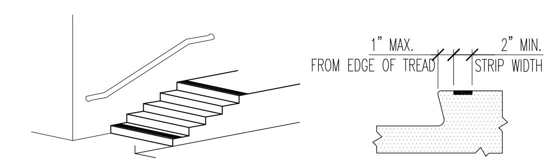

INTERIOR STAIRS
UPPER APPROACH AND LOWER PRE-CAST CONCRETE TREADS MUST BE MARKED

EXTERIOR STAIRS
ALL CAST-IN-PLACE TREADS MUST BE MARKED

WARNING STRIPS MUST BE CLEARLY CONTRASTING COLOR FROM ADJOINING SURFACES. THE STRIP IS TO BE MADE OF A QUARRY FINISHED CONCRETE MATERIAL THAT IS AT LEAST AS SLIP RESISTANT AS THE OTHER TREADS OF THE STAIR.

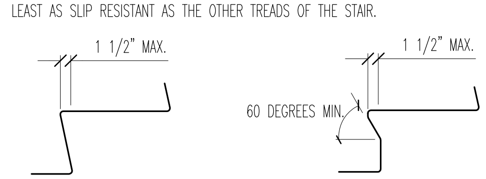

05-10-01 L.F N:\Architecture Detail Library\Details\Accessibility Details\stairwaytreadstipping.dwg

STAIRWAY TREADS	N.T.S.	13

FILENAME: A003 Accessibility Details.dwg   LAST UPDATED: 2/1/2012 10:15am   LAST SAVED BY: rcstensby

No.	DATE	REVISIONS	APPROVED

DESIGNED: RBF
DRAWN: rrm
CHECKED: wdg

RBF CONSULTING · carollo · IRVINE RANCH WATER DISTRICT

WILLIAM D. GRAEBER CA LIC NO. C11052 ARCHITECT DATE
CINDY MILLER RCE NO. 58116 PROJECT MANAGER DATE
PATRICIA UEMATSU RCE NO. 36762 PRINCIPAL ENGINEER DATE

STATE OF CALIFORNIA · WILLIAM D. GRAEBER · #C11052 · EXPIRES 5/31/2013 · REGISTERED ARCHITECT

IRVINE RANCH WATER DISTRICT
BAKER WATER TREATMENT PLANT
PROJECT NO. 11218

ACCESSIBILITY DETAILS

DRAWING A003

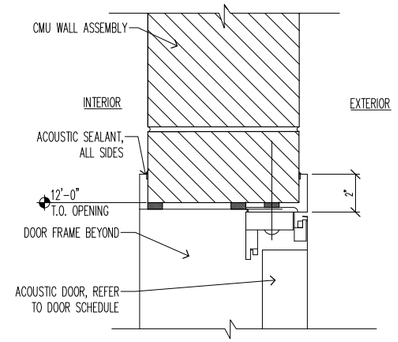

NOTE: DOOR HINGE AND INSTALLATION PER MANUFACTURER'S RECOMMENDATIONS

ACOUSTIC DOOR HEAD/JAMB AT CMU | 3" | **51**

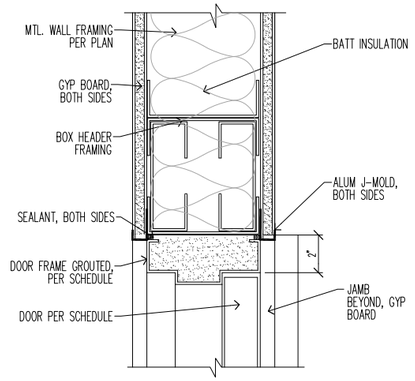

NOTE: DOOR HINGE AND INSTALLATION PER MANUFACTURER'S RECOMMENDATIONS

HM DOOR HEAD/JAMB AT INTERIOR METAL STUD | 3" | **41**

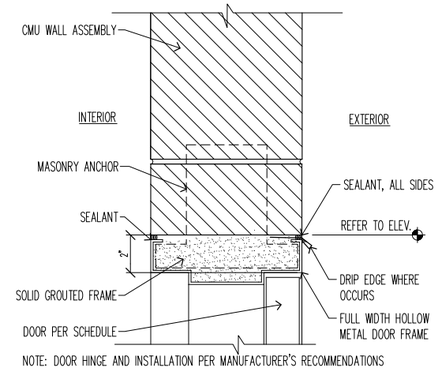

NOTE: DOOR HINGE AND INSTALLATION PER MANUFACTURER'S RECOMMENDATIONS

HM DOOR HEAD/JAMB AT CMU | 3" | **31**

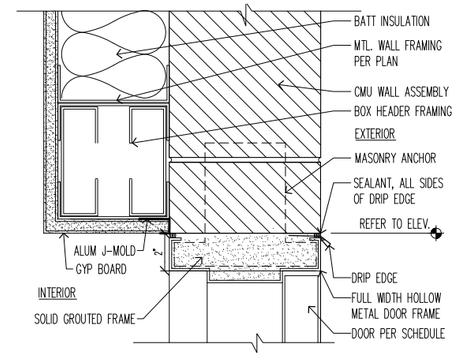

NOTE: DOOR HINGE AND INSTALLATION PER MANUFACTURER'S RECOMMENDATIONS

HM DOOR HEAD/JAMB AT CMU WITH MTL STUD | 3" | **21**

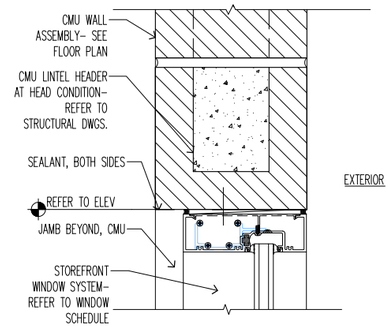

NOTE: STOREFRONT INSTALLATION PER MANUFACTURER'S RECOMMENDATIONS

STOREFRONT WINDOW HEAD/JAMB AT CMU | 3" | **11**

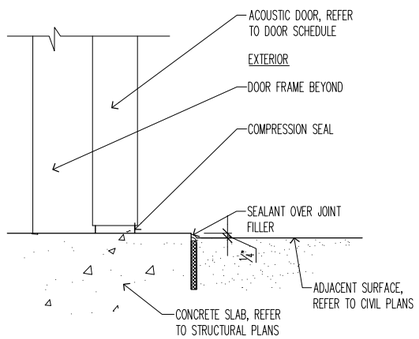

NOTE: DOOR HINGE AND INSTALLATION PER MANUFACTURER'S RECOMMENDATIONS

ACOUSTIC DOOR THRESHOLD AT CMU | 3" | **52**

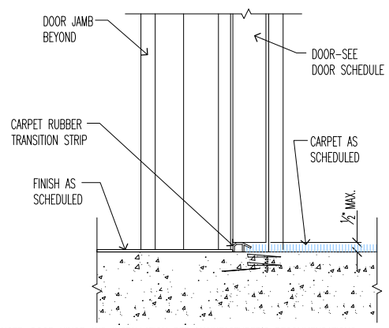

NOTE: DOOR HINGE AND INSTALLATION PER MANUFACTURER'S RECOMMENDATIONS

INTERIOR DOOR THRESHOLD- CARPET | 3" | **42**

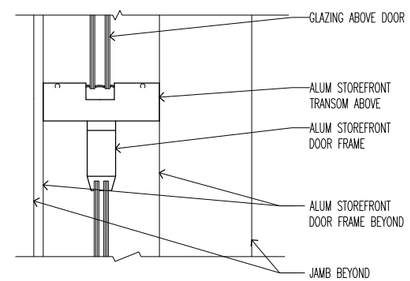

NOTE: DOOR HINGE PER MANUFACTURER'S RECOMMENDATIONS

STOREFRONT DOOR - TRANSOM | 3" | **32**

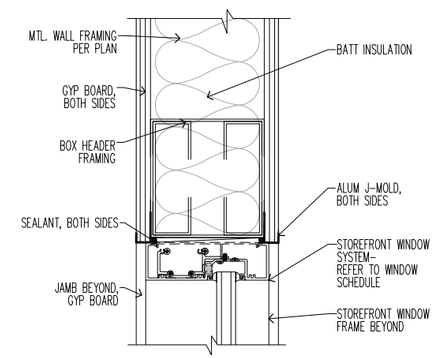

NOTE: STOREFRONT INSTALLATION PER MANUFACTURER'S RECOMMENDATIONS

SF WINDOW HEAD/JAMB AT INTERIOR METAL STUD | 3" | **22**

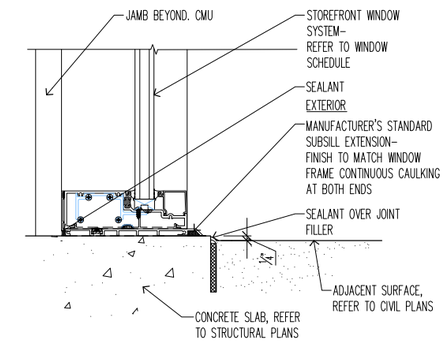

NOTE: STOREFRONT INSTALLATION PER MANUFACTURER'S RECOMMENDATIONS

EXTERIOR STOREFRONT WINDOW - THRESHOLD | 3" | **12**

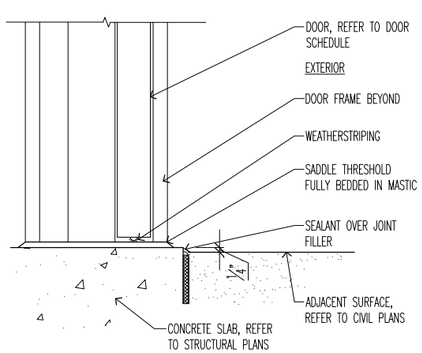

NOTE: DOOR HINGE AND INSTALLATION PER MANUFACTURER'S RECOMMENDATIONS

EXTERIOR DOOR THRESHOLD | 3" | **53**

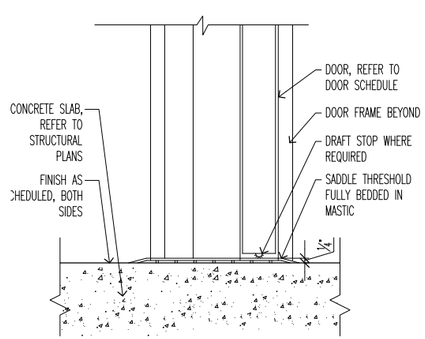

NOTE: DOOR HINGE AND INSTALLATION PER MANUFACTURER'S RECOMMENDATIONS

INTERIOR DOOR THRESHOLD- CONCRETE | 3" | **43**

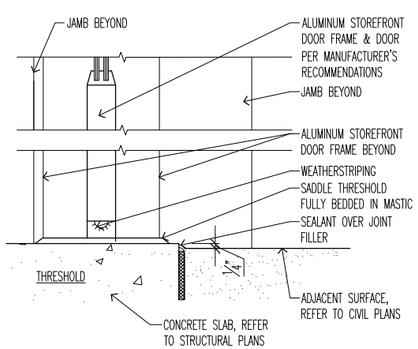

NOTE: DOOR HINGE AND INSTALLATION PER MANUFACTURER'S RECOMMENDATIONS

EXT STOREFRONT DOOR - THRESHOLD | 3" | **33**

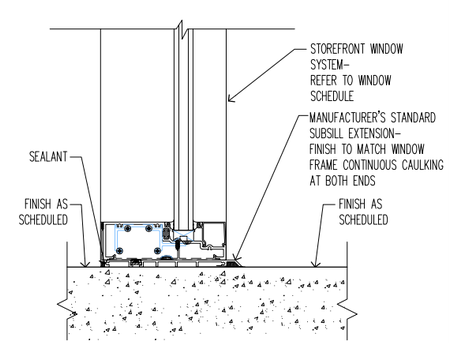

NOTE: STOREFRONT INSTALLATION PER MANUFACTURER'S RECOMMENDATIONS

INTERIOR STOREFRONT WINDOW - THRESHOLD | 3" | **23**

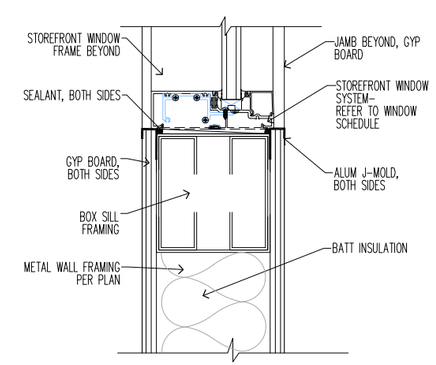

NOTE: STOREFRONT INSTALLATION PER MANUFACTURER'S RECOMMENDATIONS

SF WINDOW SILL AT INTERIOR METAL STUD | 3" | **13**

FILENAME: A004 TypDoorOpeningDetails.dwg LAST SAVED BY: rcstensby LAST UPDATED: 2/1/2012 10:16am

DESIGNED: RBF
DRAWN: rrm
CHECKED: wdg

RBF CONSULTING

carollo

Irvine Ranch Water District — IRVINE RANCH WATER DISTRICT

WILLIAM D. GRAEBER CA LIC NO. C11052 DATE

STATE OF CALIFORNIA — WILLIAM GRAEBER — #C11052 — EXPIRES 6/31/2013 — REGISTERED ARCHITECT

IRVINE RANCH WATER DISTRICT
BAKER WATF

TYPICAL DOOR & OPENING DETAILS

DRAWING A004

SHEET 117 OF

Att3_IG2_WorkPlan_4of7

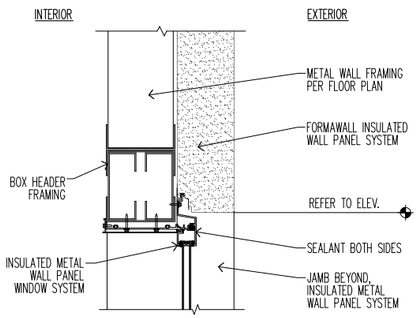

NOTE: INSTALL WINDOW & INSULATED METAL PANEL PER MANF.'S RECOMMENDATIONS

WINDOW HEAD/JAMB AT INSULATED METAL WALL PANEL	3"	51

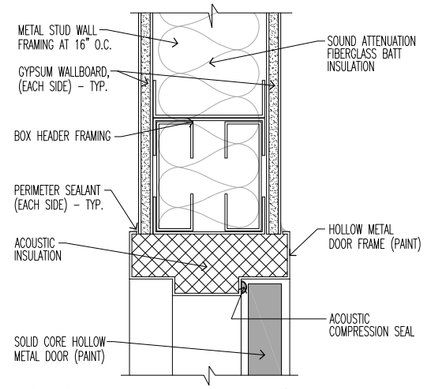

NOTE: DOOR HINGE AND INSTALLATION PER MANUFACTURER'S RECOMMENDATIONS

INTERIOR ACOUSTIC DOOR – HEAD	3"	41

Attachment 3

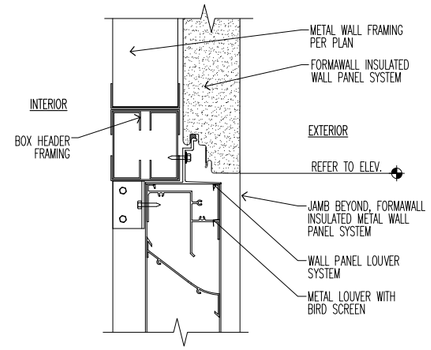

NOTE: INSTALL LOUVER & INSULATED METAL PANEL PER MANF.'S RECOMMENDATIONS

LOUVER HEAD AT INSULATED METAL WALL PANEL	3"	31

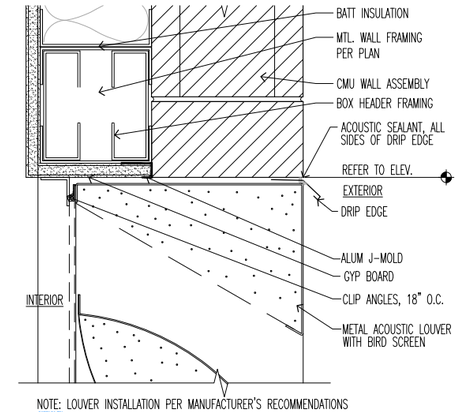

NOTE: LOUVER INSTALLATION PER MANUFACTURER'S RECOMMENDATIONS

ACOUSTICAL LOUVER HEAD/JAMB AT FURRED CMU	3"	21

SOC WMA

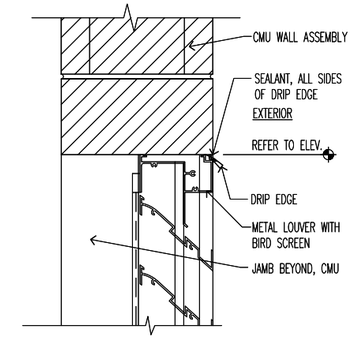

NOTE: LOUVER INSTALLATION PER MANUFACTURER'S RECOMMENDATIONS

LOUVER HEAD AT CMU	3"	11

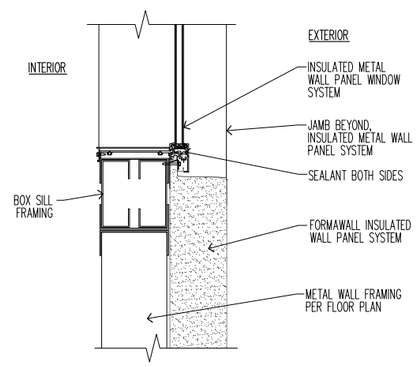

NOTE: INSTALL WINDOW & INSULATED METAL PANEL PER MANF.'S RECOMMENDATIONS

WINDOW SILL AT INSTULATED METAL WALL PANEL	3"	52

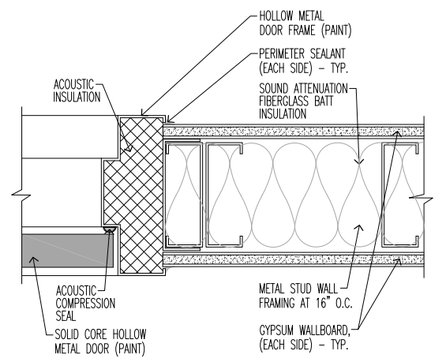

NOTE: DOOR HINGE AND INSTALLATION PER MANUFACTURER'S RECOMMENDATIONS

INTERIOR ACOUSTIC DOOR – JAMB	3"	42

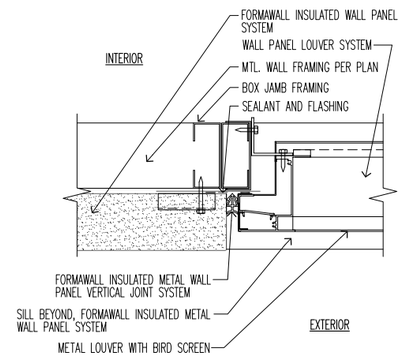

NOTE: INSTALL LOUVER & INSULATED METAL PANEL PER MANF.'S RECOMMENDATIONS

LOUVER JAMB AT INSULATED METAL WALL PANEL	3"	32

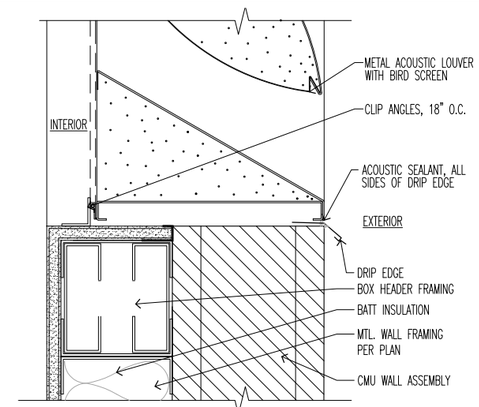

NOTE: LOUVER INSTALLATION PER MANUFACTURER'S RECOMMENDATIONS

ACOUSTIC LOUVER SILL AT FURRED CMU	3"	22

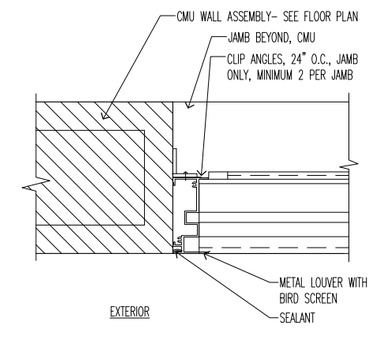

NOTE: LOUVER INSTALLATION PER MANUFACTURER'S RECOMMENDATIONS

LOUVER JAMB AT CMU	3"	12

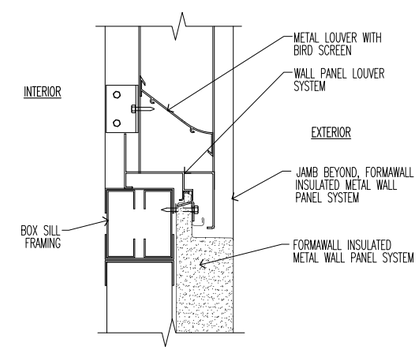

NOTE: INSTALL LOUVER & INSULATED METAL PANEL PER MANF.'S RECOMMENDATIONS

LOUVER SILL AT INSULATED METAL WALL PANEL	3"	33

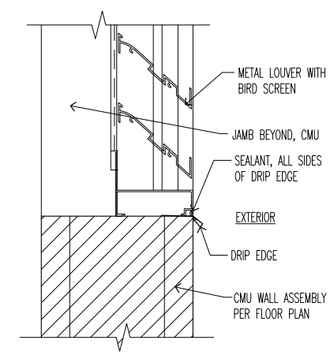

NOTE: LOUVER INSTALLATION PER MANUFACTURER'S RECOMMENDATIONS

LOUVER SILL AT CMU	3"	13

FILENAME: A005 TypDoorOpeningDetails.dwg
LAST UPDATED: 2/1/2012 10:16am
LAST SAVED BY: rcstensby

No.	DATE	REVISIONS	APPROVED

DESIGNED: RBF
DRAWN: rrm
CHECKED: wdg

RBF CONSULTING
carollo
IRVINE RANCH WATER DISTRICT

WILLIAM D. GRAEBER	CA LIC NO. C11052	ARCHITECT	DATE
CINDY MILLER	RCE NO. 58116	PROJECT MANAGER	DATE
PATRICIA UEMATSU	RCE NO. 36762	PRINCIPAL ENGINEER	DATE

STATE OF CALIFORNIA WILLIAM D. GRAEBER #C11052 EXPIRES 5/31/2013 REGISTERED ARCHITECT

IRVINE RANCH WATER DISTRICT
BAKER WATER TREATMENT PLANT
PROJECT NO. 11218

TYPICAL DOOR & OPENING DETAILS

DRAWING A005
SHEET 118 OF 632

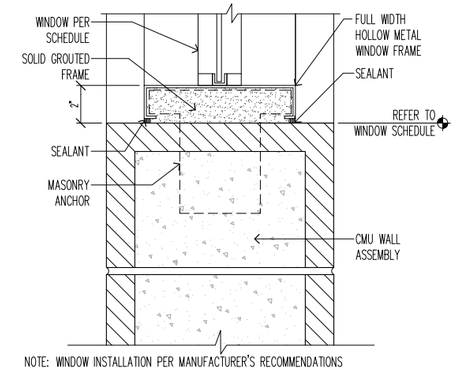

NOTE: WINDOW INSTALLATION PER MANUFACTURER'S RECOMMENDATIONS

HM WINDOW SILL AT CMU	3"	51

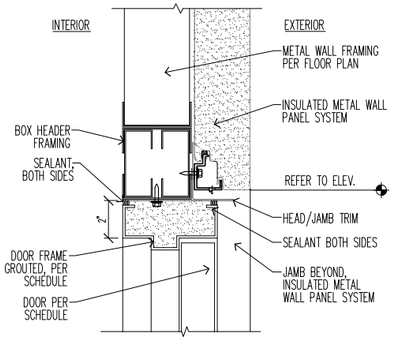

NOTE: DOOR HINGE & INSULATED METAL PANEL INSTALLATION PER MANF.'S RECOMMENDATIONS

DOOR HEAD/JAMB AT INSULATED METAL WALL PANEL	3"	41

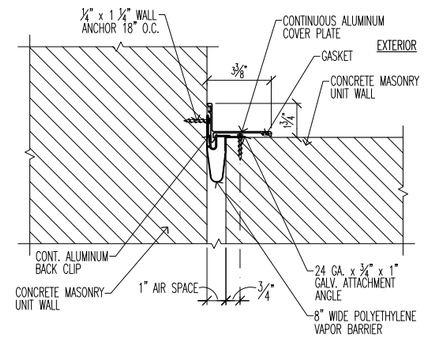

NOTE:
INSTALL EXPANSION JOINT COVER PER MANUFACTURER'S WRITTEN INSTRUCTIONS.

EXTERIOR MASONRY WALL EXPANSION JOINT COVER	3"	31

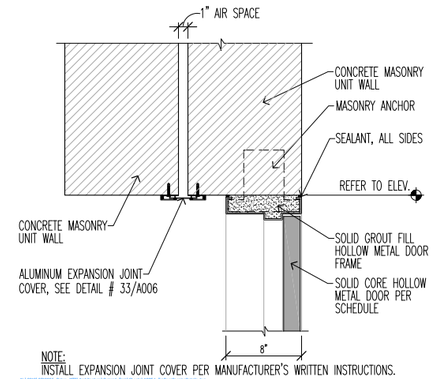

NOTE:
INSTALL EXPANSION JOINT COVER PER MANUFACTURER'S WRITTEN INSTRUCTIONS.

INTERIOR EXPANSION JOINT COVER	1 1/2"	21

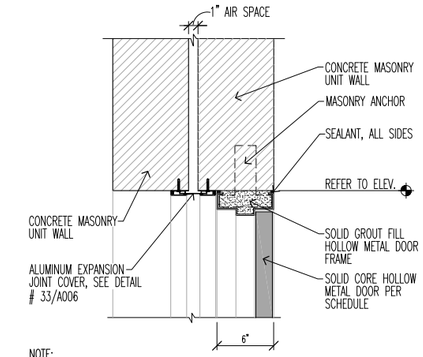

NOTE:
INSTALL EXPANSION JOINT COVER PER MANUFACTURER'S WRITTEN INSTRUCTIONS.

INTERIOR EXPANSION JOINT COVER	1 1/2"	11

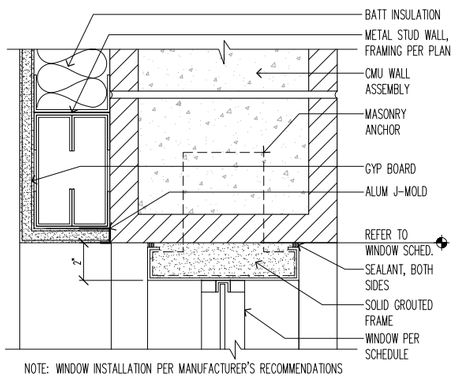

NOTE: WINDOW INSTALLATION PER MANUFACTURER'S RECOMMENDATIONS

HM WINDOW HEAD/JAMB AT CMU W/MTL STUD	3"	52

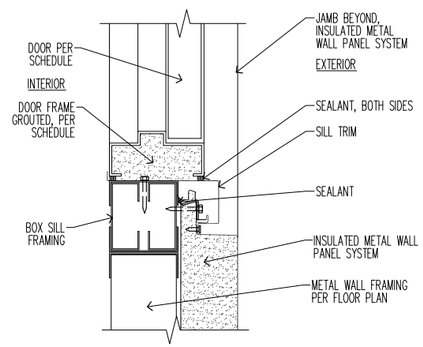

NOTE: DOOR HINGE & INSULATED METAL PANEL INSTALLATION PER MANF.'S RECOMMENDATIONS

DOOR SILL AT INSULATED METAL WALL PANEL	3"	42

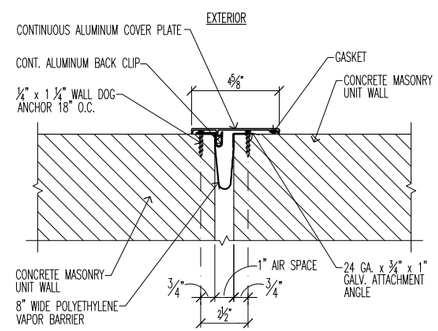

NOTE:
INSTALL EXPANSION JOINT COVER PER MANUFACTURER'S WRITTEN INSTRUCTIONS.

EXTERIOR MASONRY WALL EXPANSION JOINT COVER	3"	32

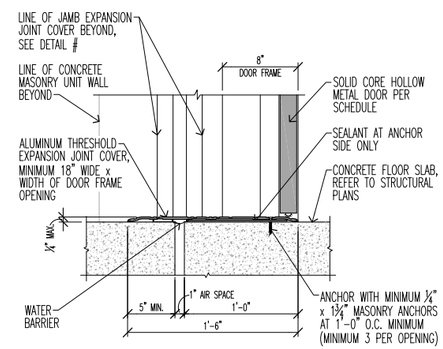

NOTE:
INSTALL DOOR THRESHOLD PER MANUFACTURER'S WRITTEN INSTRUCTIONS.

DOOR THRESHOLD – EXPANSION JOINT COVER	1 1/2"	22

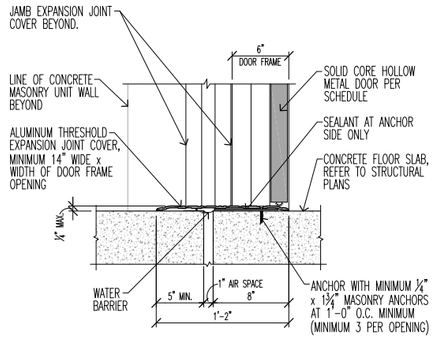

NOTE:
INSTALL DOOR THRESHOLD PER MANUFACTURER'S WRITTEN INSTRUCTIONS.

DOOR THRESHOLD – EXPANSION JOINT COVER	1 1/2"	12

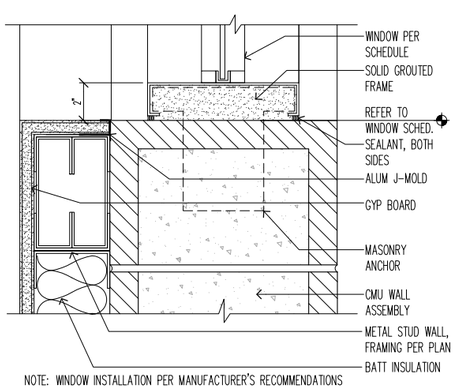

NOTE: WINDOW INSTALLATION PER MANUFACTURER'S RECOMMENDATIONS

HM WINDOW SILL AT CMU W/MTL STUD	3"	53

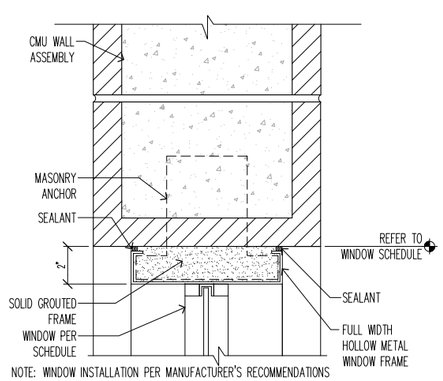

NOTE: WINDOW INSTALLATION PER MANUFACTURER'S RECOMMENDATIONS

HM WINDOW HEAD/JAMB AT CMU	3"	43

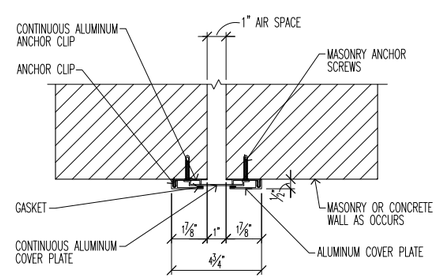

NOTE:
INSTALL EXPANSION JOINT COVER PER MANUFACTURER'S WRITTEN INSTRUCTIONS.

INTERIOR SURFACE MOUNTED WALL JOINT COVER	3"	33

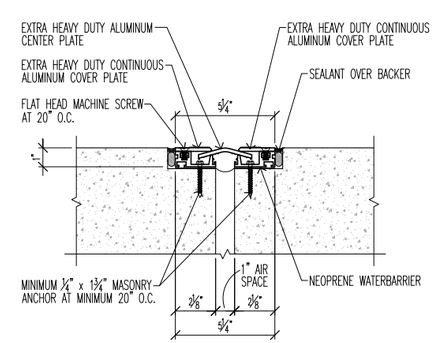

NOTE:
INSTALL FLOOR JOINT COVER PER MANUFACTURER'S WRITTEN INSTRUCTIONS.

FLOOR JOINT COVER – INTERIOR	3"	13

FILENAME: A005.1 TypDoorOpeningDetails.dwg
LAST UPDATED: 2/1/2012 10:16am
LAST SAVED BY: rcstensby

No.	DATE	REVISIONS	APPROVED

DESIGNED: RBF
DRAWN: rrm
CHECKED: wdg

RBF CONSULTING

carollo

Metropolitan Water District of Southern California — IRVINE RANCH WATER DISTRICT

WILLIAM D. GRAEBER	CA LIC NO. C11052	ARCHITECT	DATE
CINDY MILLER	RCE NO. 58116	PROJECT MANAGER	DATE
PATRICIA UEMATSU	RCE NO. 36762	PRINCIPAL ENGINEER	DATE

STATE OF CALIFORNIA — WILLIAM GRAEBER #C11052 — EXPIRES 6/30/2013 — REGISTERED ARCHITECT

IRVINE RANCH WATER DISTRICT
BAKER WATER TREATMENT PLANT
PROJECT NO. 11218

TYPICAL DOOR & OPENING DETAILS

DRAWING A006

SHEET 119 OF 632

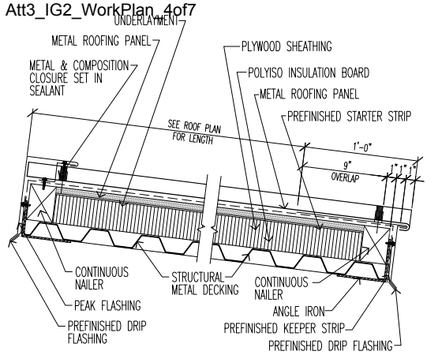

– TRABUCO CANYON BUILDING ONLY –

NOTE: ATTACH METAL ROOFING SYSTEM PER MANUFACTURER'S RECOMMENDATIONS.

METAL ROOF PANEL SYSTEM	1 1/2"	51

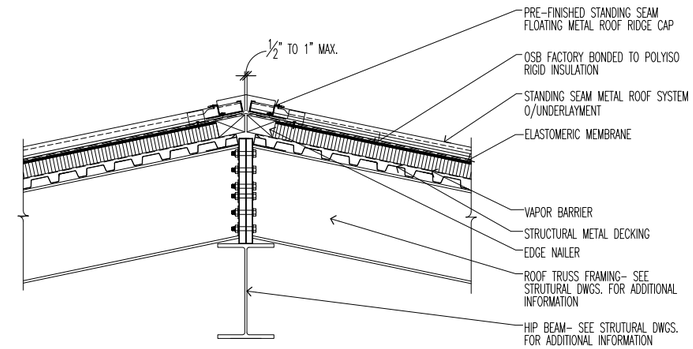

NOTE: STANDING METAL SEAM ROOF INSTALLATION PER MANF.'S RECOMMENDATIONS

STANDING SEAM METAL ROOF RIDGE (HIP CONDITION SIMILAR)	3/4"	31

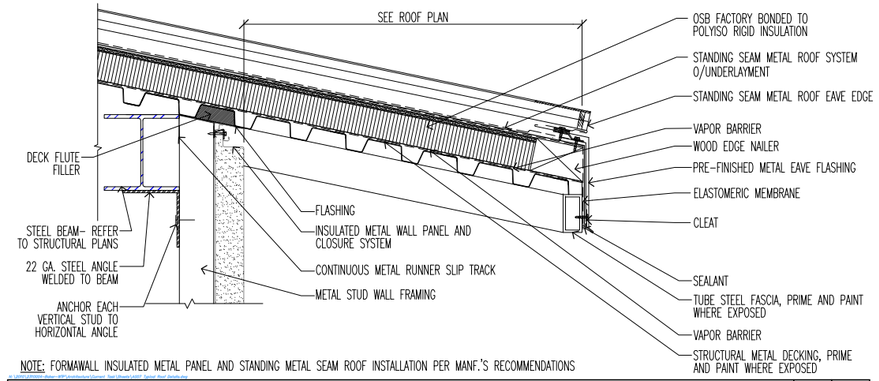

NOTE: FORMAWALL INSULATED METAL PANEL AND STANDING METAL SEAM ROOF INSTALLATION PER MANF.'S RECOMMENDATIONS

INSULATED WALL PANEL AT EAVE	1 1/2"	11

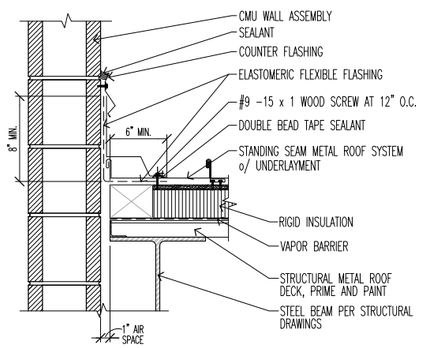

NOTE:
INSTALL STANDING SEAM METAL ROOF PER MANUFACTURER'S WRITTEN INSTRUCTIONS.

STANDING SEAM SIDEWALL	1 1/2"	52

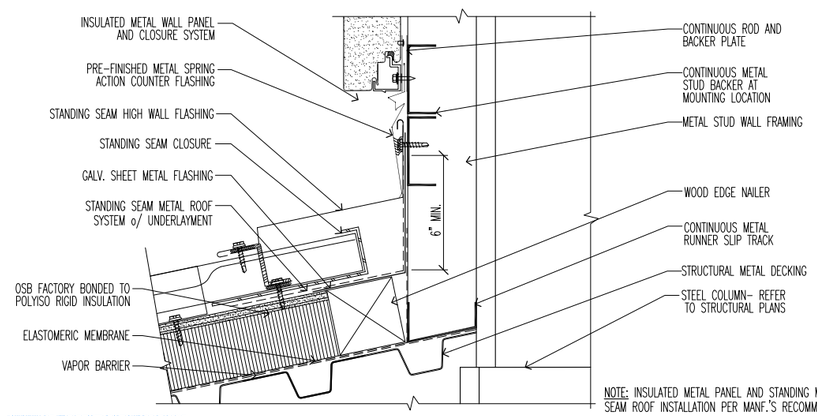

NOTE: INSULATED METAL PANEL AND STANDING METAL SEAM ROOF INSTALLATION PER MANF.'S RECOMMENDATIONS

INSULATED WALL PANEL AT STANDING SEAM	3"	32

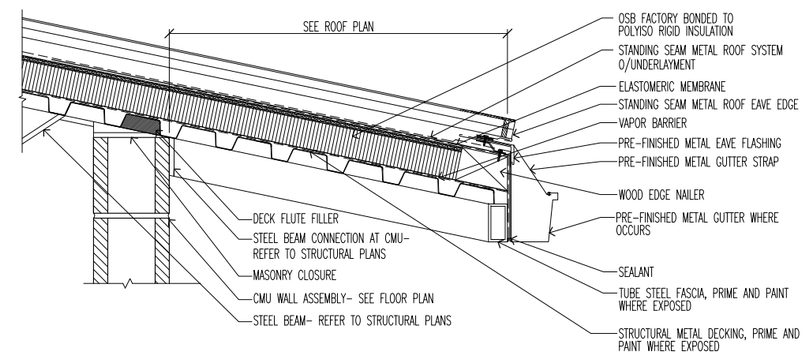

NOTE: STANDING METAL SEAM ROOF INSTALLATION PER MANF.'S RECOMMENDATIONS

CMU WALL AT EAVE	1 1/2"	12

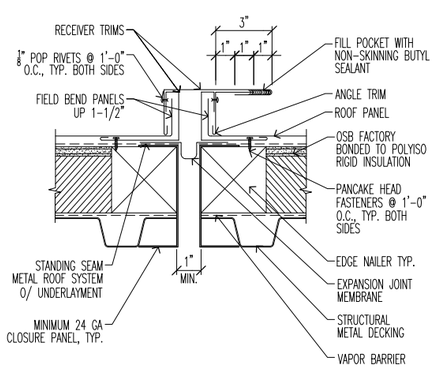

NOTE: STANDING SEAM METAL ROOF INSTALLATION PER MANF.'S RECOMMENDATIONS.

ROOF EXPANSION JOINT COVER	3"	53

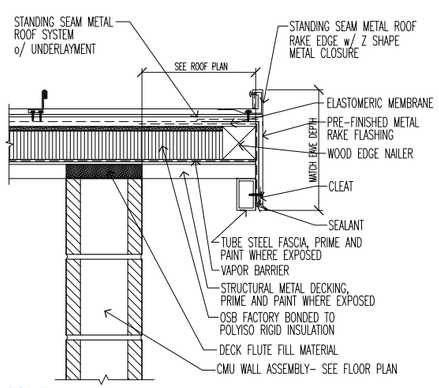

CMU WALL AT STANDING SEAM RAKE	1 1/2"	43

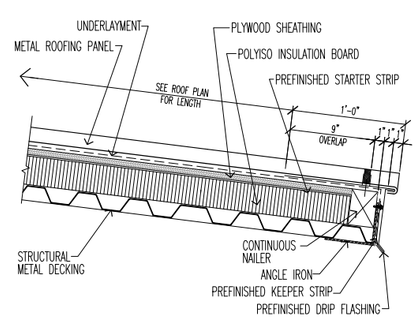

NOTE: ATTACH METAL ROOFING SYSTEM PER MANUFACTURER'S RECOMMENDATIONS.

TYPICAL METAL ROOF PANEL SYSTEM	1 1/2"	33

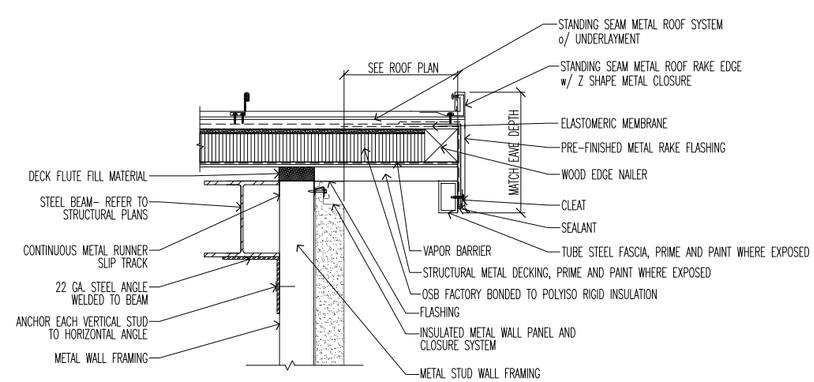

NOTE: FORMAWALL INSULATED METAL PANEL AND STANDING METAL SEAM ROOF INSTALLATION PER MANF.'S RECOMMENDATIONS

INSULATED WALL PANEL AT STANDING SEAM RAKE	1 1/2"	13

FILENAME: A007 Typical Roof Details.dwg
LAST SAVED BY: rcstensby
LAST UPDATED: 2/1/2012 10:16am

No.	DATE	REVISIONS	APPROVED

DESIGNED: RBF
DRAWN: rrm
CHECKED: wdg

RBF CONSULTING

carollo

IRVINE RANCH WATER DISTRICT

WILLIAM D. GRAEBER	CA LIC NO. C11052	ARCHITECT	DATE
CINDY MILLER	RCE NO. 58116	PROJECT MANAGER	DATE
PATRICIA UEMATSU	RCE NO. 36762	PRINCIPAL ENGINEER	DATE

STATE OF CALIFORNIA WILLIAM D. GRAEBER #C11052 EXPIRES 5/31/2013 PROFESSIONAL ARCHITECT

IRVINE RANCH WATER DISTRICT
BAKER WATER TREATMENT PLANT
PROJECT NO. 11218

TYPICAL ROOF DETAILS

DRAWING A007

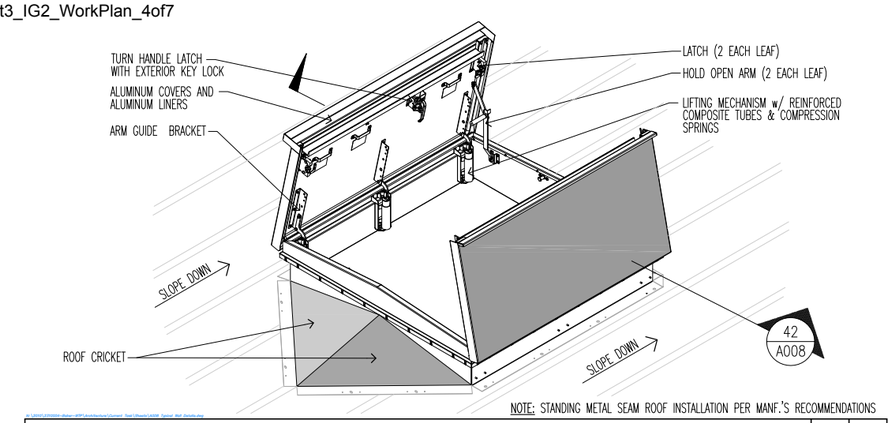

NOTE: STANDING METAL SEAM ROOF INSTALLATION PER MANF.'S RECOMMENDATIONS

ALUMINUM DOUBLE DOOR ROOF HATCH – ISOMETRIC VIEW | N.T.S. | 41

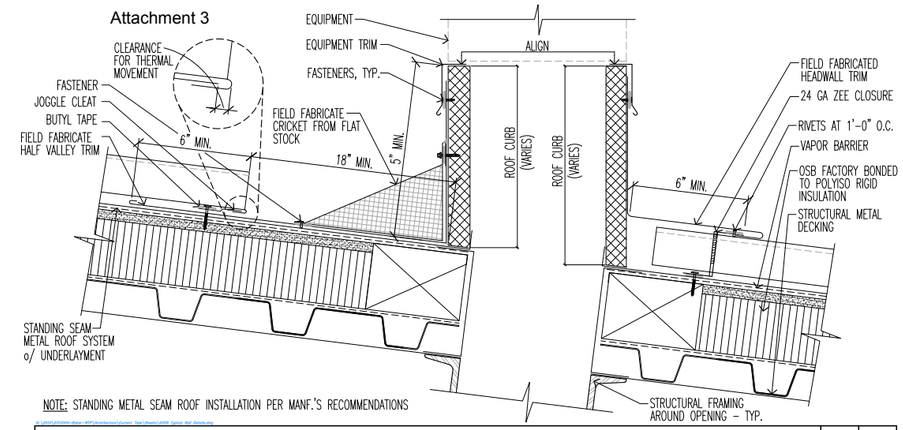

NOTE: STANDING METAL SEAM ROOF INSTALLATION PER MANF.'S RECOMMENDATIONS

ROOF EQUIPMENT CURB – SECTION | 3" | 21

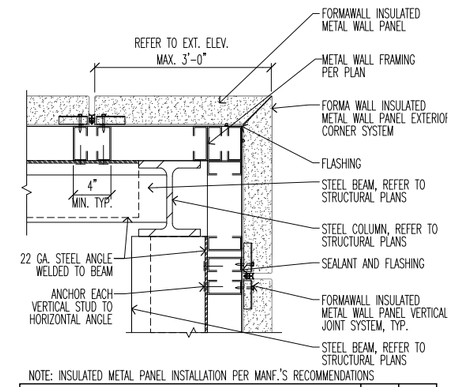

NOTE: INSULATED METAL PANEL INSTALLATION PER MANF.'S RECOMMENDATIONS

INSULATED WALL PANEL AT MTL STUD CORNER | 1 1/2" | 11

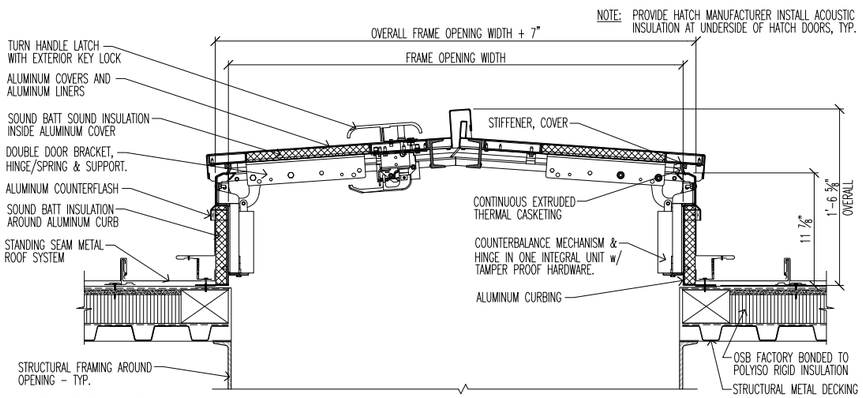

ALUMINUM DOUBLE DOOR ROOF HATCH – SECTION THRU WIDTH | 1 1/2" | 42

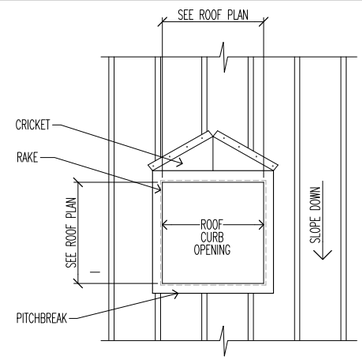

NOTE: STANDING METAL SEAM ROOF INSTALLATION PER MANF.'S RECOMMENDATIONS

ROOF CURB – PLAN VIEW | N.T.S. | 32

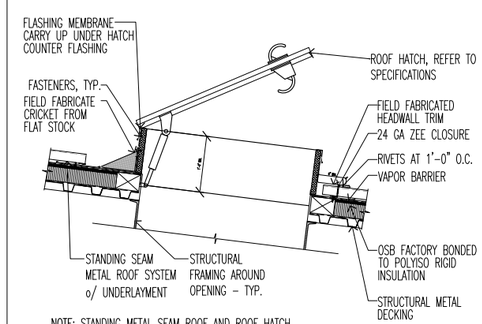

NOTE: STANDING METAL SEAM ROOF AND ROOF HATCH INSTALLATION PER MANF.'S RECOMMENDATIONS

ROOF HATCH AT STANDING METAL SEAM | 3/4" | 22

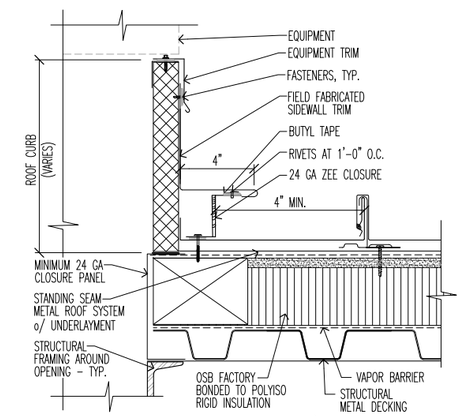

NOTE: STANDING METAL SEAM ROOF INSTALLATION PER MANF.'S RECOMMENDATIONS

ROOF CURB – RAKE | 3" | 12

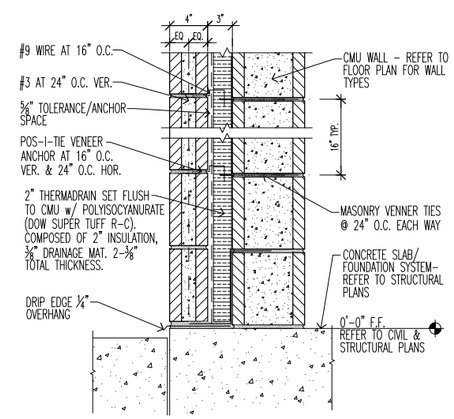

CONCRETE MASONRY WALL w/ VENEER AT GRADE | 1 1/2" | 23

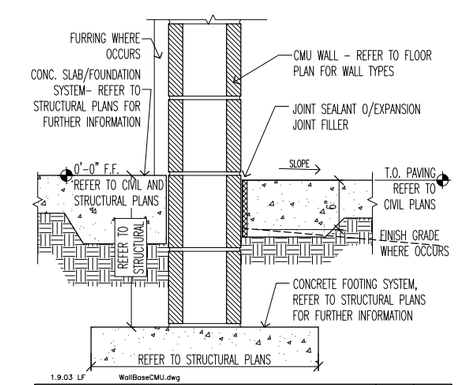

WALL BASE AT CMU | 1 1/2" | 13

FILENAME: A008 Typical Wall Details.dwg
LAST SAVED BY: rcstensby LAST UPDATED: 2/1/2012 10:16am

No.	DATE	REVISIONS	APPROVED

DESIGNED: RBF
DRAWN: rrm
CHECKED: wdg

RBF CONSULTING

carollo

IRVINE RANCH WATER DISTRICT

WILLIAM D. GRAEBER	CA LIC NO. C11052	ARCHITECT	DATE
CINDY MILLER	RCE NO. 58116	PROJECT MANAGER	DATE
PATRICIA UEMATSU	RCE NO. 36762	PRINCIPAL ENGINEER	DATE

STATE OF CALIFORNIA WILLIAM GRAEBER #C11052 EXPIRES 6/31/2013 REGISTERED ARCHITECT

IRVINE RANCH WATER DISTRICT
BAKER WATER TREATMENT PLANT
PROJECT NO. 11218

ROOF AND WALL DETAILS

DRAWING A008

SHEET 121 OF 632

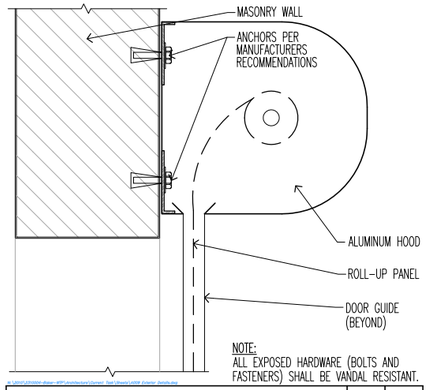

ROLL-UP DOOR – HEAD | 3" | **51**

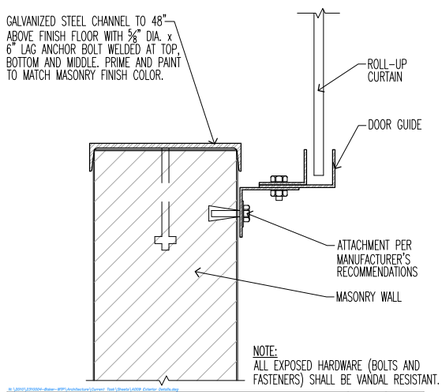

ROLL-UP DOOR – JAMB | 3" | **52**

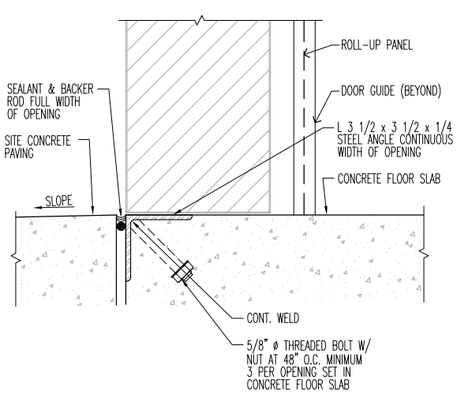

ROLL-UP DOOR – THRESHOLD | 3" | **53**

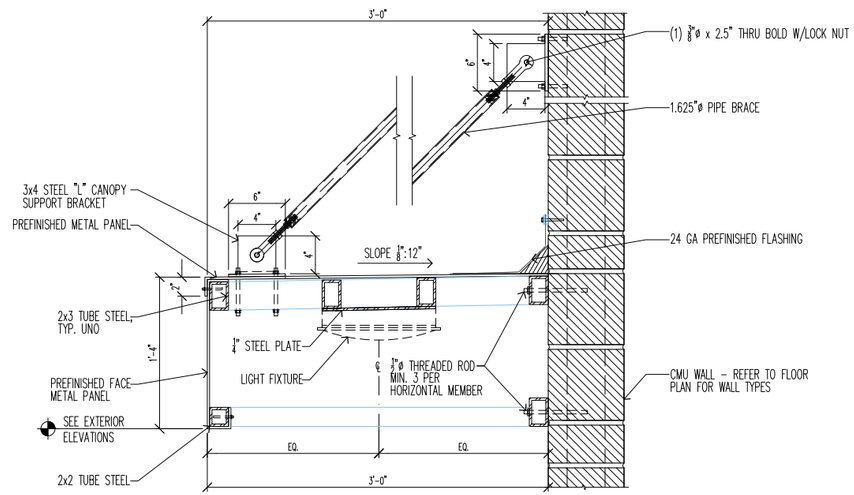

METAL CANOPY AT CMU WALL – SECTION VIEW | 1 1/2" | **32**

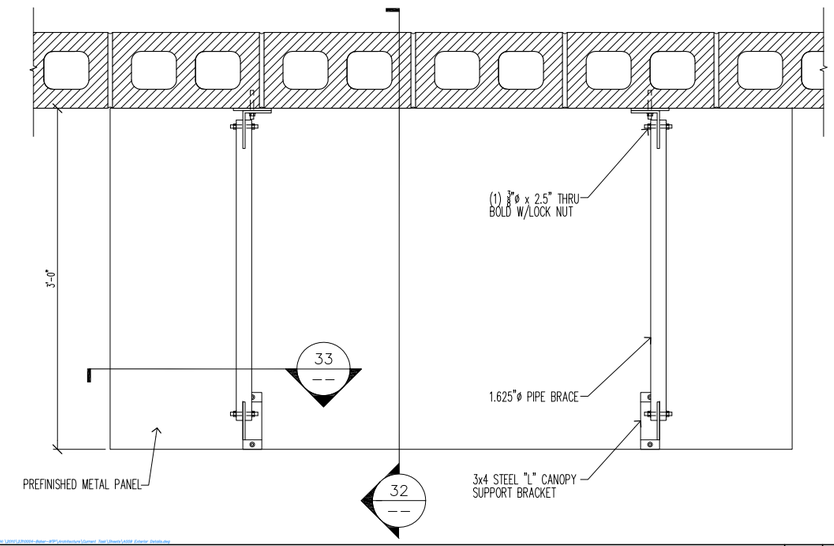

METAL CANOPY– TOP DECK | 1 1/2" | **12**

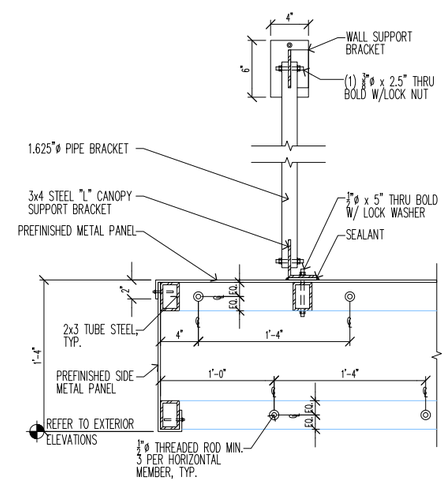

METAL CANOPY AT CMU WALL– SIDE SECTION | 1 1/2" | **33**

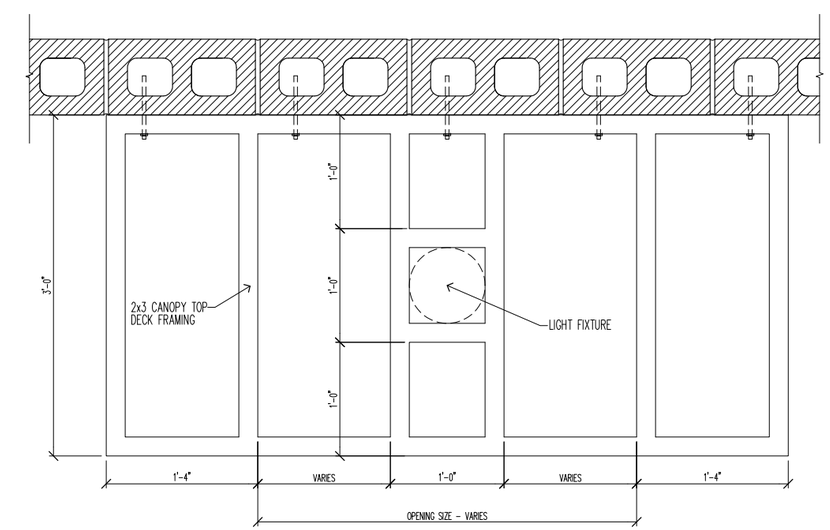

METAL CANOPY– TOP DECK FRAMING | 1 1/2" | **13**

FILENAME: A009 Exterior Details.dwg
LAST UPDATED: 2/1/2012 10:17am
LAST SAVED BY:

No.	DATE	REVISIONS	APPROVED

DESIGNED: RBF
DRAWN: rcs
CHECKED: wdg

RBF CONSULTING

carollo

IRVINE RANCH WATER DISTRICT

WILLIAM D. GRAEBER	CA LIC NO. C11052	ARCHITECT	DATE
CINDY MILLER	RCE NO. 58116	PROJECT MANAGER	DATE
PATRICIA UEMATSU	RCE NO. 36762	PRINCIPAL ENGINEER	DATE

STATE OF CALIFORNIA WILLIAM D. GRAEBER #C11052 EXPIRES 5/31/2013 REGISTERED ARCHITECT

IRVINE RANCH WATER DISTRICT
BAKER WATER TREATMENT PLANT
PROJECT NO. 11218

EXTERIOR DETAILS

DRAWING A009

Attachment 3

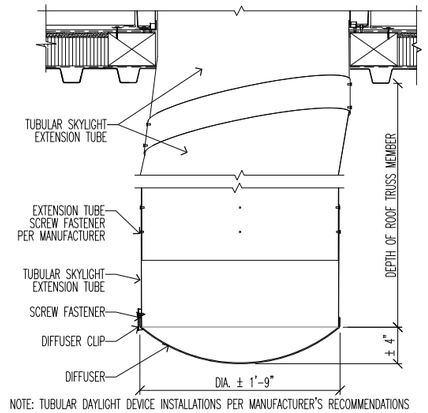

NOTE: TUBULAR DAYLIGHT DEVICE INSTALLATIONS PER MANUFACTURER'S RECOMMENDATIONS

TUBULAR DAYLIGHT DEVICE AT OPEN CEILING | 1 1/2" | **41**

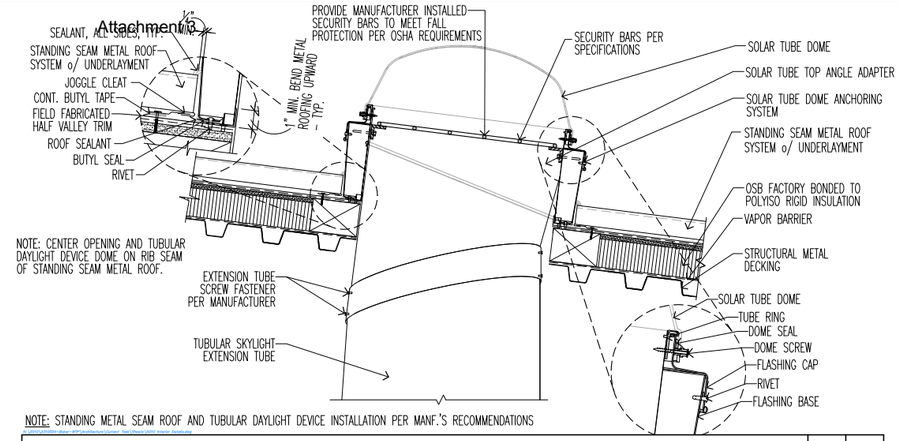

NOTE: STANDING METAL SEAM ROOF AND TUBULAR DAYLIGHT DEVICE INSTALLATION PER MANF.'S RECOMMENDATIONS

TUBULAR DAYLIGHT DEVICE AT STANDING SEAM ROOF SYSTEM | 1 1/2" | **21**

SOC WMA

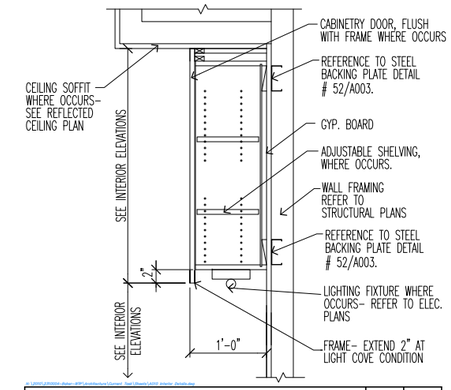

UPPER CABINET SECTION | 1" | **11**

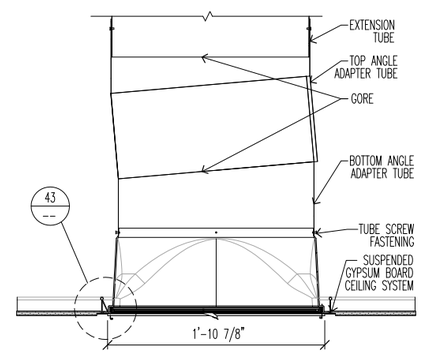

NOTE: TUBULAR DAYLIGHT DEVICE INSTALLATIONS AND SUSPENDED GYPSUM BOARD CEILING SYSTEM PER MANUFACTURER'S RECOMMENDATIONS

TUBULAR DAYLIGHT DEVICE AT GYP. BD. CEILING | 1 1/2" | **42**

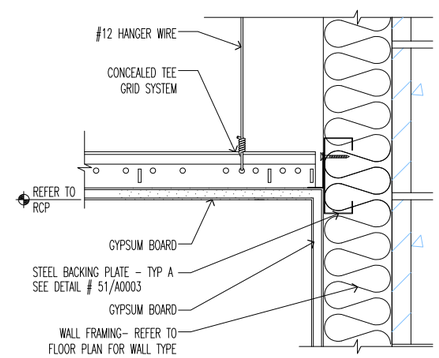

GYPSUM BOARD CEILING SYSTEM AT WALL | 3" | **32**

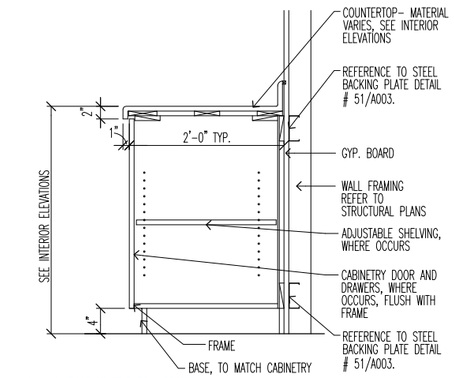

BASE CABINET SECTION | 1" | **12**

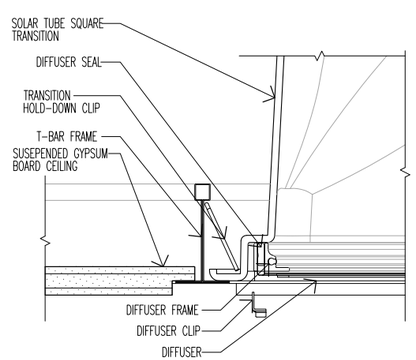

NOTE: TUBULAR DAYLIGHT DEVICE INSTALLATIONS AND SUSPENDED GYPSUM BOARD CEILING SYSTEM PER MANUFACTURER'S RECOMMENDATIONS

TUBULAR DAYLIGHT DEVICE TRANSITION | 3" | **43**

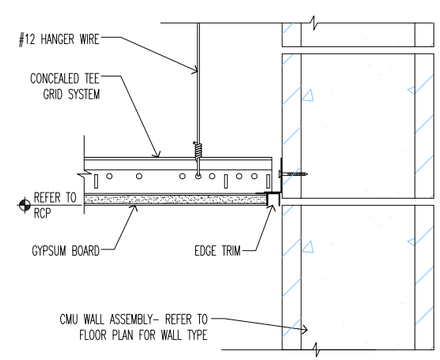

GYPSUM BOARD CEILING SYSTEM AT WALL | 3" | **33**

FILENAME: A010 Interior Details.dwg
LAST UPDATED: 2/1/2012 10:17am
LAST SAVED BY:

No.	DATE	REVISIONS	APPROVED

DESIGNED: RBF
DRAWN: KA
CHECKED: wdg

RBF CONSULTING

carollo

IRVINE RANCH WATER DISTRICT

WILLIAM D. GRAEBER	CA LIC NO. C11052	ARCHITECT	DATE
CINDY MILLER	RCE NO. 58116	PROJECT MANAGER	DATE
PATRICIA UEMATSU	RCE NO. 36762	PRINCIPAL ENGINEER	DATE

STATE OF CALIFORNIA WILLIAM D. GRAEBER #C11052 EXPIRES 5/31/2013 REGISTERED ARCHITECT

IRVINE RANCH WATER DISTRICT
BAKER WATER TREATMENT PLANT
PROJECT NO. 11218

INTERIOR DETAILS

DRAWING A010

SHEET 123 OF 632

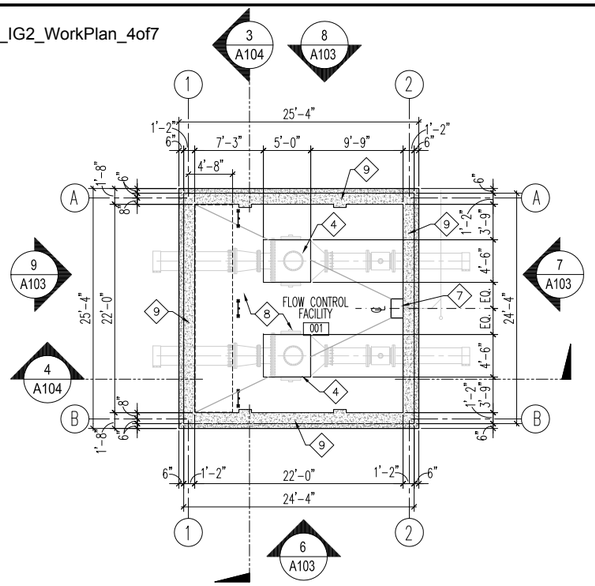

FLOW CONTROL FACILITY - BUILDING 100A
FINISH FLOOR LEVEL PLAN
SCALE: 1/8" = 1'-0"
C A101

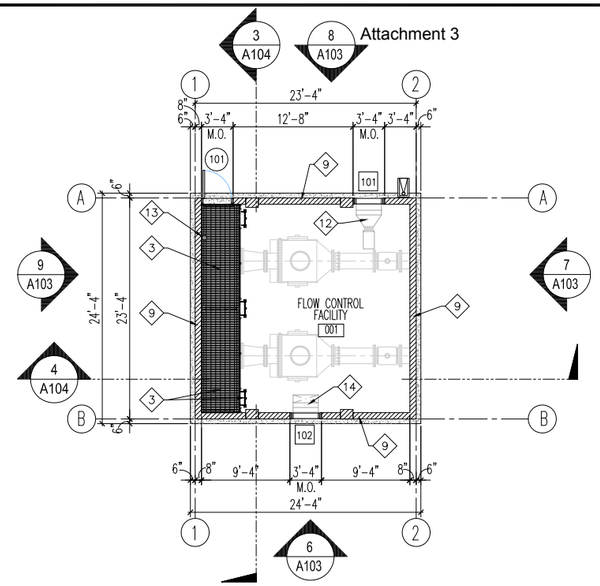

FLOW CONTROL FACILITY - BUILDING 100A
PLATFORM FLOOR LEVEL PLAN
SCALE: 1/8" = 1'-0"
A A101

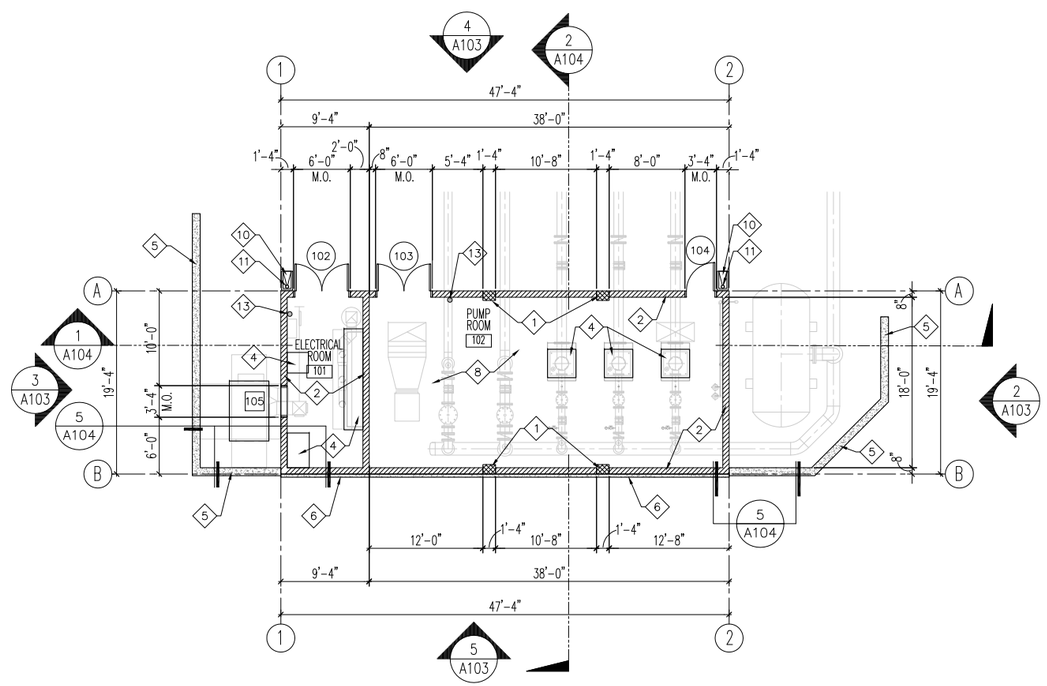

TRABUCO CANYON PUMP STATION - BUILDING 100B
FIRST FLOOR PLAN
SCALE: 1/8" = 1'-0"
B A101

NOTES

SOC WMA

1. REFER TO GENERAL ARCHITECTURAL NOTES FOR ADDITIONAL INFORMATION AND REQUIREMENTS.
2. WHERE NO CONSTRUCTION DETAILS ARE SHOWN OR NOTED FOR ANY PART OF THE WORK, DETAILS SHALL BE THE SAME AS FOR OTHER SIMILAR WORK.
3. COORDINATE ALL UTILITY CONNECTION PRIOR TO EXECUTION OF THIS WORK.
4. SEE DOOR & OPENING SCHEDULE FOR ADDITIONAL INFORMATION IN DRAWING A105.

KEY NOTES

1. CONCRETE MASONRY UNIT PILASTER, REFER TO STRUCTURAL DRAWINGS FOR ADDITIONAL INFORMATION.
2. 8 INCH WIDE CONCRETE MASONRY UNIT WALL. REFER TO EXTERIOR ELEVATION FOR COLOR/TEXTURE PATTERNS. REFER TO STRUCTURAL DRAWINGS FOR ADDITIONAL INFORMATION.
3. PREFABRICATED FLOOR DECK AND LADDER ASSEMBLY. REFER TO STRUCTURAL DRAWINGS FOR ADDITIONAL INFORMATION.
4. CONCRETE PEDESTAL FOR WATER PROCESS SYSTEM FACILITIES. REFER TO STRUCTURAL DRAWINGS FOR ADDITIONAL INFORMATION.
5. CONCRETE SITE RETAINING WALL. REFER TO CIVIL DRAWINGS FOR ADDITIONAL INFORMATION.
6. CONCRETE BUILDING RETAINING WALL. REFER TO STRUCTURAL DRAWINGS FOR ADDITIONAL INFORMATION.
7. CONCRETE WELL FOR SUMP DRAIN.
8. SEALED CONCRETE FLOOR SLAB.
9. REINFORCED CONCRETE WALL ASSEMBLY. REFER TO STRUCTURAL DRAWINGS FOR ADDITIONAL INFORMATION.
10. PRE-CAST CONCRETE SPLASH BLOCK ON GRADE.
11. PRE-FINISHED METAL DOWNSPOUT.
12. FAN OUTLET DUCTED TO EXHAUST LOUVER.
13. FIRE EXTINGUISHER LOCATION. VERIFY EXACT LOCATION AND QUANTITY WITH FIRE AUTHORITY INSPECTOR.
14. ACOUSTICAL INTAKE LOUVER w/ UPTURNED OPENING.

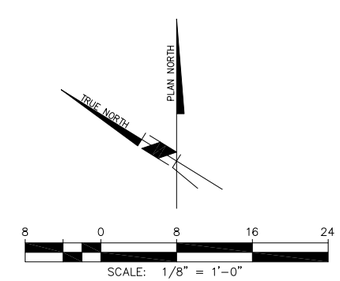

FILENAME: A101 F01 Floor Plan.dwg
LAST UPDATED: 2/2/2012 9:24am
LAST SAVED BY: rcstensby

No.	DATE	REVISIONS	APPROVED

DESIGNED: RBF
DRAWN: rcs
CHECKED: wdg

RBF CONSULTING

carollo

IRVINE RANCH WATER DISTRICT

WILLIAM D. GRAEBER	CA LIC NO. C11052	ARCHITECT	DATE
CINDY MILLER	RCE NO. 58116	PROJECT MANAGER	DATE
PATRICIA UEMATSU	RCE NO. 36762	PRINCIPAL ENGINEER	DATE

STATE OF CALIFORNIA WILLIAM D. GRAEBER #C11052 REGISTERED ARCHITECT 5/31/2013

IRVINE RANCH WATER DISTRICT
BAKER WATER TREATMENT PLANT
PROJECT NO. 11218

FLOW CONTROL FACILITY BUILDING & TCWD PUMP STATION BUILDING
FIRST FLOOR PLAN & EXITING

DRAWING A101

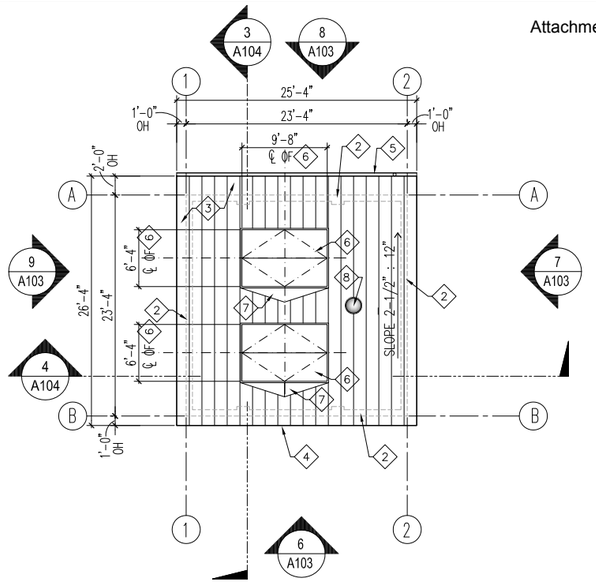

FLOW CONTROL FACILITY - BUILDING 100A ROOF PLAN

SCALE: 1/8" = 1'-0"

A
A101

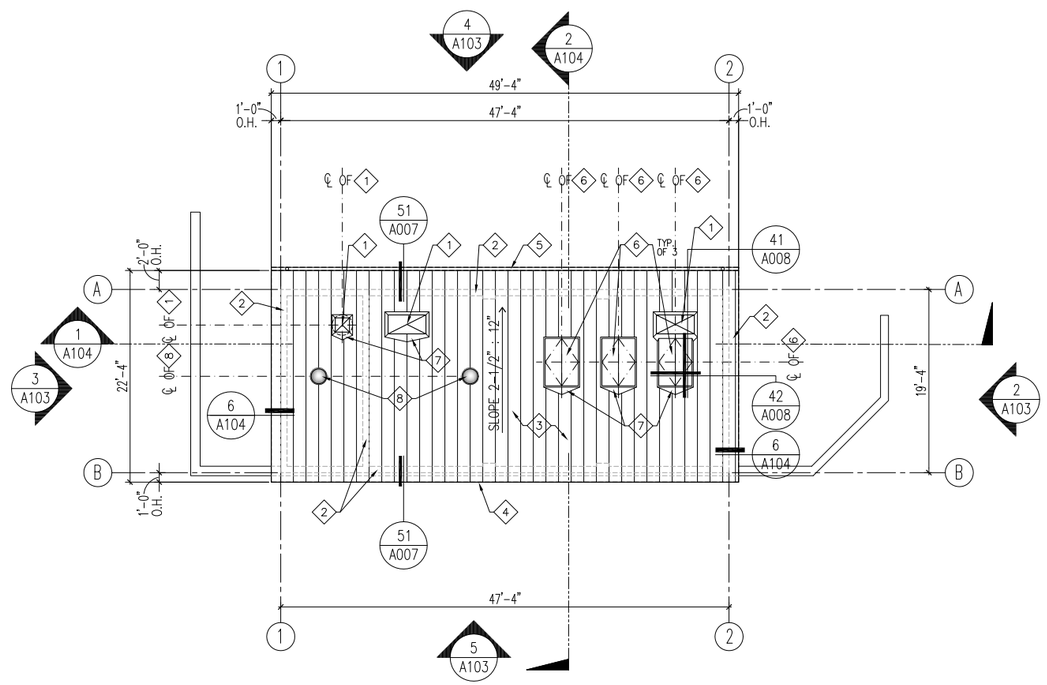

TRABUCO CANYON PUMP STATION - BUILDING 100B ROOF PLAN

SCALE: 1/8" = 1'-0"

B
A101

NOTES

1. REFER TO GENERAL ARCHITECTURAL NOTES FOR ADDITIONAL INFORMATION AND REQUIREMENTS.
2. WHERE NO CONSTRUCTION DETAILS ARE SHOWN OR NOTED FOR ANY PART OF THE WORK, DETAILS SHALL BE THE SAME AS FOR OTHER SIMILAR WORK.
3. COORDINATE ALL UTILITY CONNECTION PRIOR TO EXECUTION OF THIS WORK.
4. SEE DOOR & OPENING SCHEDULE FOR ADDITIONAL INFORMATION IN DRAWING A105.

KEY NOTES

1. MECHANICAL EQUIPMENT, REFER TO MECHANICAL DRAWINGS FOR ADDITIONAL INFORMATION.
2. LINE OF WALL BELOW.
3. STANDING SEAM METAL ROOFING OVER UNDERLAYMENT OVER OSB/POLYISOCYANURATE RIGID INSULATION OVER VAPOR BARRIER OVER STRUCTURAL ROOF DECK.
4. PRE-FINISHED SHEET METAL RIDGE FLASHING, MATCH STANDING SEAM METAL ROOF COLOR.
5. PRE-FINISHED SHEET METAL GUTTER AND DOWNSPOUT, MATCH STANDING SEAM METAL ROOF COLOR.
6. INSULATED DOUBLE DOOR ROOF HATCH, CENTER OVER EQUIPMENT BELOW. CONTRACTOR TO VERIFY EXACT LOCATIONS PRIOR TO INSTALLATION. SEE DETAILS # 41/A008 AND 42/A008. VERIFY EXACT HATCH SIZE REQUIREMENTS w/ STRUCTURAL DOCUMENTS.
7. CRICKET, SEE SIMILAR DETAIL # 21/A008 FOR ADDITIONAL INFORMATION.
8. TUBULAR DAYLIGHT DEVICE AND ROOF FLASHING ASSEMBLY, CENTER ON STANDING SEAM OF METAL ROOFING SYSTEM. SEE DETAIL # 21/A010 FOR ADDITIONAL INFORMATION.

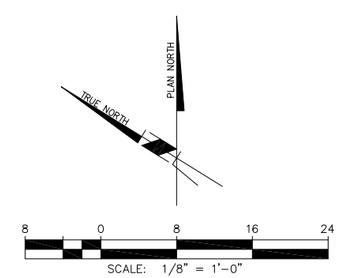

FILENAME: A102 F01 Roof.dwg
LAST UPDATED: 2/2/2012 9:24am
LAST SAVED BY: rcstensby

No.	DATE	REVISIONS	APPROVED

DESIGNED: RBF
DRAWN: rcs
CHECKED: wdg

RBF CONSULTING

carollo

IRVINE RANCH WATER DISTRICT

WILLIAM D. GRAEBER	CA LIC NO. C11052	ARCHITECT	DATE
CINDY MILLER	RCE NO. 58116	PROJECT MANAGER	DATE
PATRICIA UEMATSU	RCE NO. 36762	PRINCIPAL ENGINEER	DATE

STATE OF CALIFORNIA WILLIAM D. GRAEBER #C11052 EXPIRES 5/31/2013 REGISTERED ARCHITECT

IRVINE RANCH WATER DISTRICT
BAKER WATER TREATMENT PLANT
PROJECT NO. 11218

FLOW CONTROL FACILITY BUILDING & TCWD PUMP STATION BUILDING ROOF PLAN

DRAWING A102

SHEET 125 OF 632

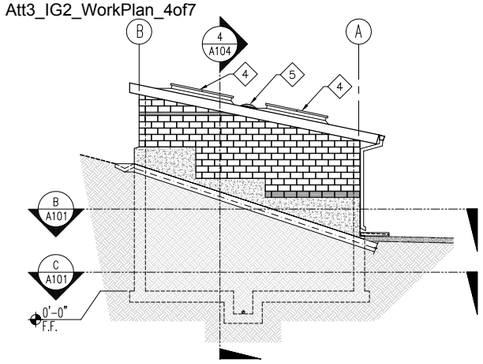

FLOW CONTROL FACILITY
EXTERIOR ELEVATION (7 / A101)
SCALE: 1/8" = 1'-0"

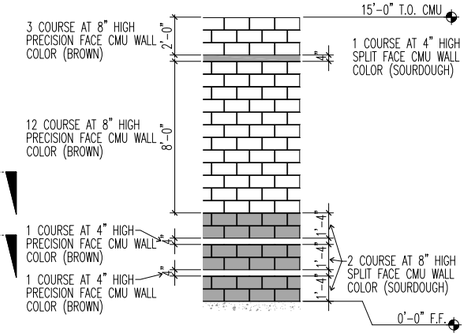

FLOW CONTROL FACILITY
CMU WALL PATTERN (10 / A101)
SCALE: 1/4" = 1'-0"

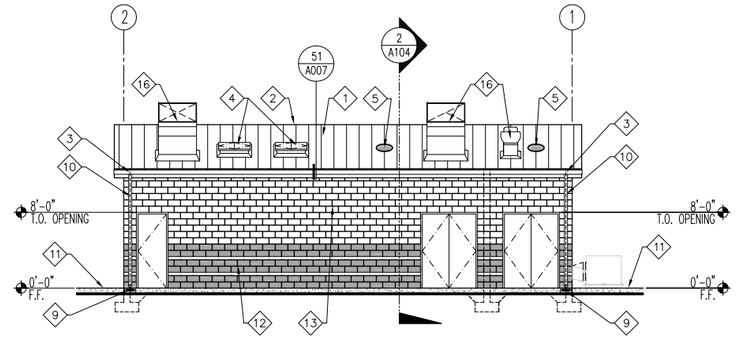

TCWD PUMP STATION
EXTERIOR ELEVATION (4 / A101)
SCALE: 1/8" = 1'-0"

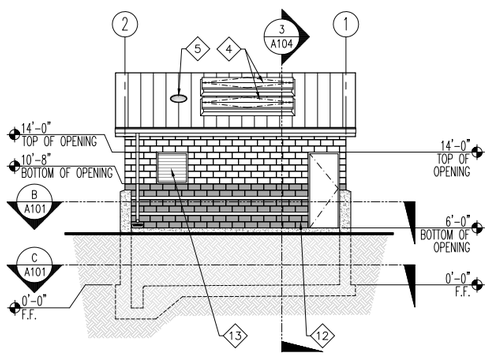

FLOW CONTROL FACILITY
EXTERIOR ELEVATION (8 / A101)
SCALE: 1/8" = 1'-0"

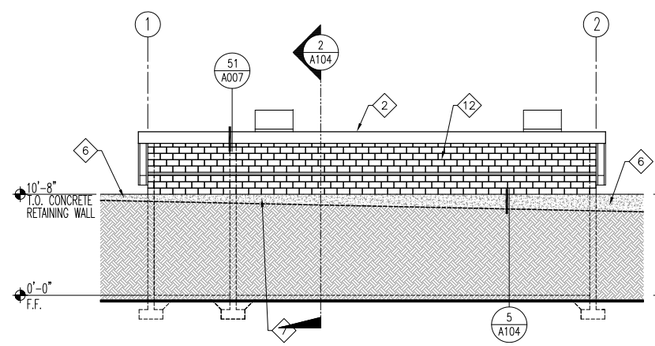

TCWD PUMP STATION
EXTERIOR ELEVATION (5 / A101)
SCALE: 1/8" = 1'-0"

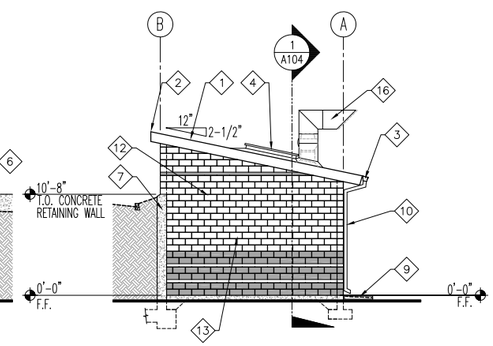

TCWD PUMP STATION
EXTERIOR ELEVATION (2 / A101)
SCALE: 1/8" = 1'-0"

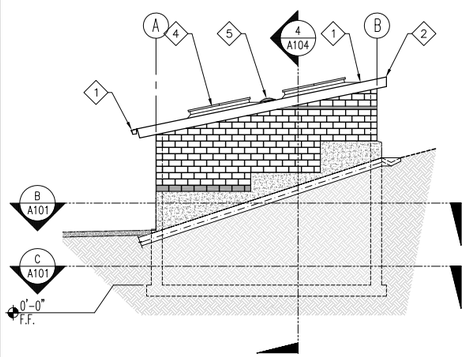

FLOW CONTROL FACILITY
EXTERIOR ELEVATION (9 / A101)
SCALE: 1/8" = 1'-0"

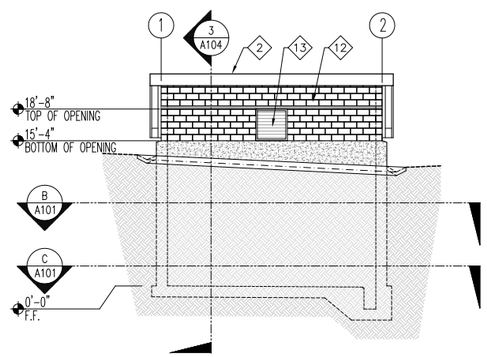

FLOW CONTROL FACILITY
EXTERIOR ELEVATION (6 / A101)
SCALE: 1/8" = 1'-0"

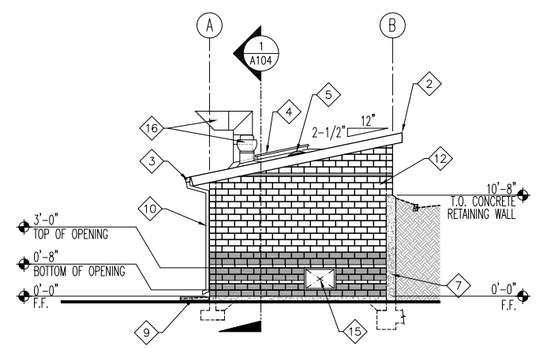

TCWD PUMP STATION
EXTERIOR ELEVATION (3 / A101)
SCALE: 1/8" = 1'-0"

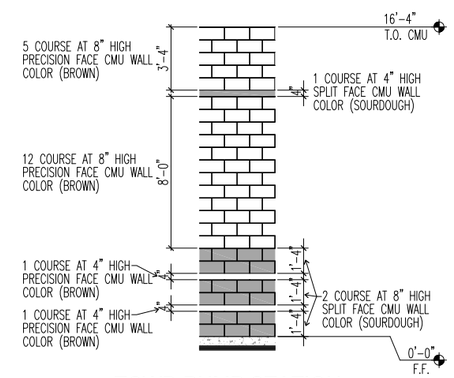

TCWD PUMP STATION
CMU WALL PATTERN (1 / A101)
SCALE: 1/4" = 1'-0"

NOTES

1. REFER TO GENERAL ARCHITECTURAL NOTES FOR ADDITIONAL INFORMATION AND REQUIREMENTS.
2. WHERE NO CONSTRUCTION DETAILS ARE SHOWN OR NOTED FOR ANY PART OF THE WORK, DETAILS SHALL BE THE SAME AS FOR OTHER SIMILAR WORK.
3. COORDINATE ALL UTILITY CONNECTION PRIOR TO EXECUTION OF THIS WORK.

KEY NOTES

1. STANDING SEAM METAL ROOFING OVER UNDERLAYMENT OVER OSB/POLYISOCYANURATE RIGID INSULATION OVER VAPOR BARRIER OVER STRUCTURAL ROOF DECK.
2. PRE-FINISHED SHEET METAL RIDGE FLASHING, MATCH STANDING SEAM METAL ROOF COLOR.
3. PRE-FINISHED SHEET METAL GUTTER AND DOWNSPOUT, MATCH STANDING SEAM METAL ROOF COLOR.
4. DOUBLE DOOR ROOF HATCH, CENTER OVER EQUIPMENT BELOW. CONTRACTOR TO VERIFY EXACT LOCATIONS PRIOR TO INSTALLATION.
5. TUBULAR DAYLIGHT DEVICE AND ROOF FLASHING ASSEMBLY, CENTER ON STANDING SEAM OF METAL ROOFING SYSTEM. SEE DETAIL #21/A010 FOR ADDITIONAL INFORMATION.
6. CONCRETE SITE RETAINING WALL. REFER TO CIVIL DRAWINGS FOR ADDITIONAL INFORMATION.
7. CONCRETE BUILDING RETAINING WALL. REFER TO STRUCTURAL DRAWINGS FOR ADDITIONAL INFORMATION.
8. REINFORCED CONCRETE WALL ASSEMBLY. REFER TO STRUCTURAL DRAWINGS FOR ADDITIONAL INFORMATION.
9. PRE-CAST CONCRETE SPLASH BLOCK ON GRADE.
10. PRE-FINISHED 6 SQ. METAL DOWNSPOUT.
11. FINISH CONCRETE SLAB. REFER TO CIVIL DRAWINGS FOR ADDITIONAL INFORMATION.
12. CONCRETE MASONRY UNIT WALL. SEE DETAIL # 1/A103 AND 10/A103 FOR COLOR / TEXTURE PATTERNS. REFER TO STRUCTURAL DRAWINGS FOR ADDITIONAL INFORMATION.
13. WALL OPENING FOR WALL LOUVER. REFER TO MECHANICAL DRAWINGS FOR ADDITIONAL INFORMATION.
14. REINFORCED CONCRETE ROOF ASSEMBLY. REFER TO STRUCTURAL DRAWINGS FOR ADDITIONAL INFORMATION.
15. WALL OPENING FOR HVAC DUCTWORKS. REFER TO MECHANICAL DRAWINGS FOR ADDITIONAL INFORMATION.
16. MECHANICAL EQUIPMENT. REFER TO MECHANICAL DRAWINGS FOR ADDITIONAL INFORMATION.

FILENAME: A103 Exterior Elevations.dwg
LAST UPDATED: 2/2/2012 9:25am
LAST SAVED BY: rcstensby

No.	DATE	REVISIONS	APPROVED

DESIGNED: RBF
DRAWN: rcs
CHECKED: wdg

RBF CONSULTING

carollo

IRVINE RANCH WATER DISTRICT

WILLIAM D. GRAEBER	CA LIC NO. C11052	ARCHITECT	DATE
CINDY MILLER	RCE NO. 58116	PROJECT MANAGER	DATE
PATRICIA UEMATSU	RCE NO. 36762	PRINCIPAL ENGINEER	DATE

STATE OF CALIFORNIA — WILLIAM D. GRAEBER — #C11052 — EXPIRES 5/31/2013 — REGISTERED ARCHITECT

IRVINE RANCH WATER DISTRICT
BAKER WATER TREATMENT PLANT
PROJECT NO. 11218

TCWD PUMP STATION & FLOW CONTROL FACILITY EXTERIOR ELEVATIONS

DRAWING A103

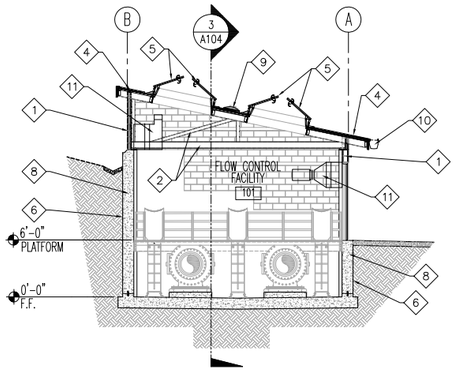

FLOW CONTROL FACILITY BUILDING SECTION
SCALE: 1/8" = 1'-0"
3 A101

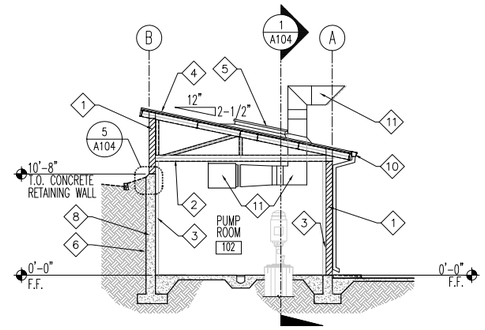

TCWD PUMP STATION BUILDING SECTION
SCALE: 1/8" = 1'-0"
1 A101

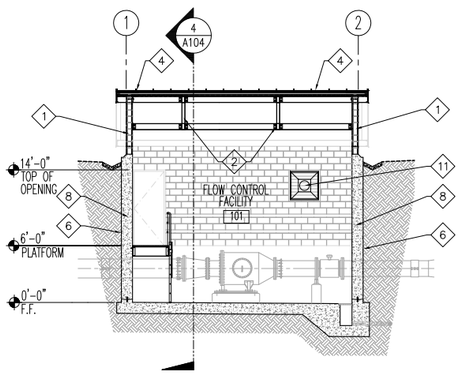

FLOW CONTROL FACILITY BUILDING SECTION
SCALE: 1/8" = 1'-0"
4 A101

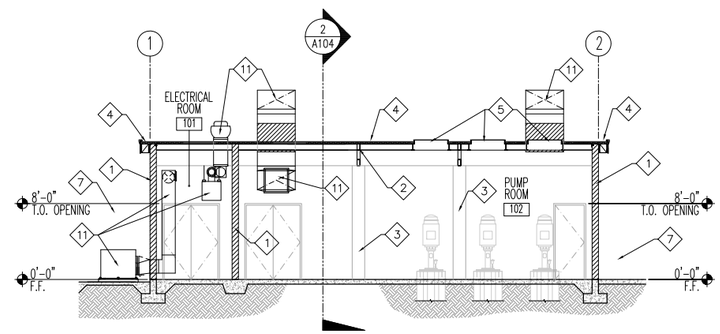

TCWD PUMP STATION BUILDING SECTION
SCALE: 1/8" = 1'-0"
2 A101

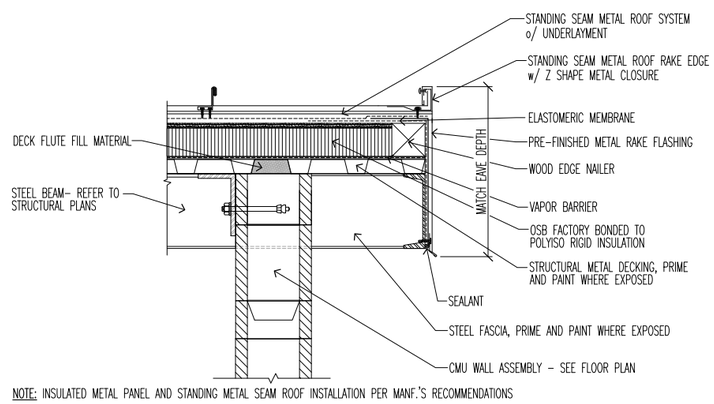

NOTE: INSULATED METAL PANEL AND STANDING METAL SEAM ROOF INSTALLATION PER MANF.'S RECOMMENDATIONS

STANDING SEAM METAL ROOF AT RAKE WITH CMU WALL
SCALE: 1-1/2" = 1'-0"
6 A103

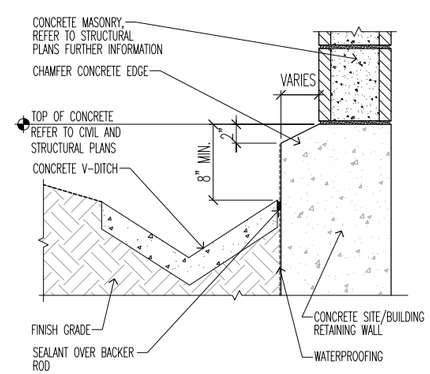

CONCRETE SITE / BUILDING RETAINING WALL w/ CONCRETE V-DITCH
SCALE: 1-1/2" = 1'-0"
5 A103

NOTES

1. REFER TO GENERAL ARCHITECTURAL NOTES FOR ADDITIONAL INFORMATION AND REQUIREMENTS.
2. WHERE NO CONSTRUCTION DETAILS ARE SHOWN OR NOTED FOR ANY PART OF THE WORK, DETAILS SHALL BE THE SAME AS FOR OTHER SIMILAR WORK.
3. COORDINATE ALL UTILITY CONNECTION PRIOR TO EXECUTION OF THIS WORK.

KEY NOTES

1. CONCRETE MASONRY UNIT WALL. REFER TO STRUCTURAL DRAWINGS FOR ADDITIONAL INFORMATION.
2. STRUCTURAL FRAMING SYSTEM, REFER TO STRUCTURAL DRAWINGS FOR ADDITIONAL INFORMATION.
3. CONCRETE MASONRY UNIT PILASTER, REFER TO STRUCTURAL DRAWINGS FOR ADDITIONAL INFORMATION.
4. STANDING SEAM METAL ROOFING OVER UNDERLAYMENT OVER OSB/POLYISOCYANURATE RIGID INSULATION OVER VAPOR BARRIER OVER STRUCTURAL ROOF DECK.
5. DOUBLE DOOR ROOF HATCH, CENTER OVER EQUIPMENT BELOW. CONTRACTOR TO VERIFY EXACT LOCATIONS PRIOR TO INSTALLATION.
6. WATERPROOFING APPLY FROM TOP OF CONCRETE FOOTING TO 6 INCHES ABOVE FINISH GRADE.
7. CONCRETE SITE RETAINING WALL BEYOND. REFER TO CIVIL DRAWINGS FOR ADDITIONAL INFORMATION.
8. CONCRETE BUILDING RETAINING WALL. REFER TO STRUCTURAL DRAWINGS FOR ADDITIONAL INFORMATION.
9. TUBULAR DAYLIGHT DEVICE AND ROOF FLASHING ASSEMBLY, CENTER ON STANDING SEAM OF METAL ROOFING SYSTEM. SEE DETAIL #21/A010 FOR ADDITIONAL INFORMATION.
10. PRE-FINISHED GUTTER.
11. MECHANICAL EQUIPMENT. SEE MECHANICAL DRAWINGS FOR ADDITIONAL INFORMATION.

8 0 8 16 24
SCALE: 1/8" = 1'-0"

LAST SAVED BY: rcstensby LAST UPDATED: 2/2/2012 9:25am FILENAME: A104 Building Sections.dwg

No.	DATE	REVISIONS	APPROVED

DESIGNED: RBF
DRAWN: rcs
CHECKED: wdg

RBF CONSULTING

carollo

IRVINE RANCH WATER DISTRICT

WILLIAM D. GRAEBER	CA LIC NO. C11052	ARCHITECT	DATE
CINDY MILLER	RCE NO. 58116	PROJECT MANAGER	DATE
PATRICIA UEMATSU	RCE NO. 36762	PRINCIPAL ENGINEER	DATE

STATE OF CALIFORNIA WILLIAM D. GRAEBER #C11052 EXPIRES 5/31/2013 REGISTERED ARCHITECT

IRVINE RANCH WATER DISTRICT
BAKER WATER TREATMENT PLANT
PROJECT NO. 11218

TCWD PUMP STATION & FLOW CONTROL FACILITY BUILDING SECTIONS

DRAWING A104

LEGEND

MATERIALS:

FLOOR
- FL1 CONCRETE
- FL2 VINYL COMP.TILE
- FL3 SHEET VINYL
- FL4 CERAMIC TILE
- FL5 CARPET TILE
- FL6 STEEL GRATE

BASE
- B1 TOP SET – RUBBER
- B2 CERAMIC TILE BASE
- B3 CONCRETE CURB 12" HIGH

WALL
- W1 GYP. BD.
- W2 W.R. GYP. BD.
- W3 METAL WALL PANEL
- W4 CONCRETE MASONRY UNITS
- W5 CONCRETE
- W6 CERAMIC TILE
- W7 FRP PANEL FULL HEIGHT
- W8 FRP PANELS AT 6'–0" WAINSCOT HEIGHT

CEILING
- C1 GYP. BD.
- C2 F.R. GYP. BD.
- C3 EXPOSED CONSTRUCTION
- C4 2' x 4' LAY–IN ACOUSTIC CEILING PANELS
- C5 FULL ROOM ACOUSTIC INSULATION ABOVE FINISH CEILING

DOOR
- D1 WOOD
- D2 HOLLOW METAL
- D3 ALUMINUM
- D4 GLASS
- D5 STEEL

DOOR FRAME
- DF1 WOOD
- DF2 HOLLOW METAL
- DF3 STEEL
- DF4 ALUMINUM

CORE/GLASS
- CG1 HOLLOW
- CG2 SOLID
- CG3 GLASS
- CG4 WOOD & TEMP. GLASS
- CG5 RIGID INSULATION
- CG6 GLASS BLOCK

WINDOW
- WW1 WOOD

WINDOW FRAME
- WF1 WOOD
- WF2 ALUM.
- WF3 HOLLOW METAL

LOUVER
- L1 PRE–FINISH LOUVER ASSEMBLY

FINISHES:

- F1 FACTORY FINISH
- F2 GLAZED
- F3 STAIN (PREFINISHED)
- F4 PRIMED & PAINTED
- F5 SEALED CONCRETE
- F6 STAINED AND SEALED
- F7 FACTORY FINISH T–BAR
- F8 EXPOSED CONSTRUCTION
- F9 WATER REPELLANT COATING

ROOM FINISH SCHEDULE

ROOM NO.	ROOM NAME	FLOOR		BASE		WALLS								CEILING			REMARKS
						NORTH		EAST		SOUTH		WEST					
		MATL.	FIN.	MATL.	FIN.	MATL.	FIN.	MATL.	FIN.	MATL.	FIN.	MATL.	FIN.	MATL.	FIN.	HGT.	
001	FLOW CONTROL FACILITY	FL1	F5	–	–	W4	F4	W4	F4	W4/W5	F4	W4	F4	C3	F4	VARIES	–
101	ELECTRICAL ROOM	FL1	F5	B1	F1	W4	F4	W4/W5	F4	W4/W5	F4	W4	F4	C3	F4	VARIES	–
102	PUMP ROOM	FL1	F5	–	–	W4	F4	W4	F4	W4/W5	F4	W4	F4	C3	F4	VARIES	–

OPENING SCHEDULE (WINDOWS/LOUVERS/MASONRY OPENINGS)

OPENING NO.	OPENING							GLASS		LOUVER				DETAILS				REMARKS
	WIDTH	HEIGHT	THICKNESS	TYPE	MATERIAL	FINISH	LABEL	CORE	THICK	TYPE	THICK	MATERIAL	FINISH	HEAD	JAMB	JAMB	SILL	
101	3'–4"	3'–4"	8"	–	–	–	–	–	–	A	8"	L1	F1	11/A005	12/A005	12/A005	13/A005	1, 8
102	3'–4"	3'–4"	8"	–	–	–	–	–	–	A	8"	L1	F1	11/A005	12/A005	12/A005	13/A005	1, 8
103	—																—	NOT USED
104	—																—	NOT USED
105	3'–4"	2'–0"	8"	B	W4	F8	–	–	–	–	–	–	–	–	–	–	–	19

OPENING TYPE

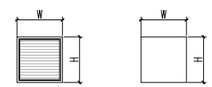

A
FIXED LOUVER

B
OPENING

DOOR SCHEDULE

DOOR NO.	OPENING		DOOR					FRAME		HARDWARE SET #	LABEL	DETAILS				REMARKS
	WIDTH	HEIGHT	THICKNESS	TYPE	MATERIAL	FINISH	CORE/GL	MATERIAL	FINISH			HEAD	JAMB	JAMB	THRESHOLD	
101	3'–4"	8'–0"	1 3/4"	AA	D2	F4	CG2	DF2	F4	–	–	31/A004	31/A004	31/A004	53/A004	1, 2, 5, 6, 9, 16, 18
102	6'–0"	8'–0"	1 3/4"	BB	D2	F4	CG2	DF2	F4	–	–	31/A004	31/A004	31/A004	53/A004	1, 2, 3, 4, 5, 6, 9, 16, 18
103	6'–0"	8'–0"	1 3/4"	BB	D2	F4	CG2	DF2	F4	–	–	31/A004	31/A004	31/A004	53/A004	1, 2, 3, 4, 5, 6, 9, 16, 18
104	3'–4"	8'–0"	1 3/4"	AA	D2	F4	CG2	DF2	F4	–	–	31/A004	31/A004	31/A004	53/A004	1, 2, 3, 5, 6, 9, 16, 18

DOOR TYPE

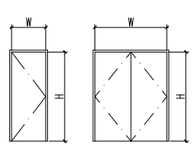

AA
BASIC
FLUSH DOOR

BB
BASIC FLUSH
DOUBLE DOOR

NOTES

SOC WMA

1. REFER TO GENERAL ARCHITECTURAL NOTES FOR ADDITIONAL INFORMATION AND REQUIREMENTS.
2. WHERE NO CONSTRUCTION DETAILS ARE SHOWN OR NOTED FOR ANY PART OF THE WORK, DETAILS SHALL BE THE SAME AS FOR OTHER SIMILAR WORK.

DOOR & WINDOW NOTES

1. PROVIDE FULL WEATHERSTRIPPING PERIMETER OF FRAME.
2. PROVIDE OVERHEAD DOOR CLOSER.
3. PROVIDE PANIC HARDWARE AT ACTIVE LEAF.
4. PROVIDE COORDINATOR ASTRAL AND SEALS.
5. PROVIDE DOOR STOP.
6. ALL DOORS & FRAME TO BE "MAXIMUM DUTY" MODEL 2 SEAMLESS.
7. ACCESS CONTROL SYSTEM READER/KEYPAD & DOOR RELEASE.
8. PROVIDE INSECT SCREEN AT INTERIOR SIDE OF LOUVER PANELS.
9. PROVIDE DOOR BOTTOM SEAL(S).
10. DUAL GLAZED WINDOW IN WINDOW FRAME.
11. PROVIDE SIGN AT DOOR TO READ: 'THIS DOOR TO REMAIN UNLOCKED DURING BUSINESS HOURS' PER SECTION 1003.3.1.8
12. ALL GLAZING TO BE TEMPERED PER UBC STANDARD 24.2. PART 1.
13. AT TEMPERED GLAZING LOCATIONS GLAZING TO HAVE A PERMANENT LABEL AND SHALL BE VISIBLE PER UCB 2406.2.
14. DOOR TO BE UNDERCUT BY 1"
15. PROVIDE ACCESSIBLE DOOR SIGNAGE AS REQUIRED PER 11/A002.
16. PROVIDE DOOR SIGNAGE AS REQUIRED PER 13/A002.
17. DOOR TO RECEIVE INTERNATIONAL SYMBOL OF ACCESS PER 12/A002.
18. ALL EXIT DOORS SHALL BE OPERABLE FROM THE INSIDE WITHOUT KEY OR SPECIAL KNOWLEDGE OR EFFORT. ANY LOCKS ON EXIT DOORS MUST BE RELEASED BY NORMAL OPERATION FROM THE INSIDE WITHOUT KEY OR SPECIAL KNOWLEDGE OR EFFORT (EXIT HANDLES OR PANIC BARS MUST RELEASE LOCKS) PER SECTION 1003.0.1.8.
19. PROVIDE OPENING FOR DUCTWORKS AS REQUIRED. REFER TO MECHANICAL DRAWINGS FOR ADDITIONAL INFORMATION AND REQUIREMENTS.

LAST SAVED BY: rcstensby LAST UPDATED: 2/2/2012 9:25am FILENAME: A105 Door Opening Finish Schedules.dwg

No.	DATE	REVISIONS	APPROVED

DESIGNED: RBF
DRAWN: rcs
CHECKED: wdg

RBF CONSULTING

carollo

IRVINE RANCH WATER DISTRICT

WILLIAM D. GRAEBER CA LIC NO. C11052 ARCHITECT DATE
CINDY MILLER RCE NO. 58116 PROJECT MANAGER DATE
PATRICIA UEMATSU RCE NO. 36762 PRINCIPAL ENGINEER DATE

STATE OF CALIFORNIA WILLIAM D. GRAEBER #C11052 EXPIRES 5/31/2013 REGISTERED ARCHITECT

IRVINE RANCH WATER DISTRICT
BAKER WATER TREATMENT PLANT
PROJECT NO. 11218

TCWD PUMP STATION &
FLOW CONTROL FACILITY
DOOR, OPENING & FINISH SCHEDULE

DRAWING A105

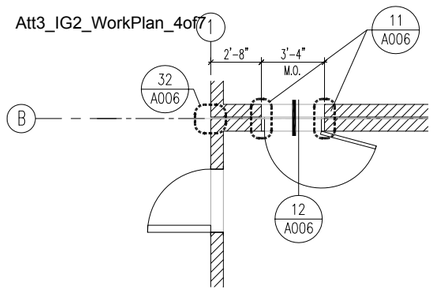

ENLARGED FLOOR PLAN
SCALE: 1/4" = 1'-0"
B A201

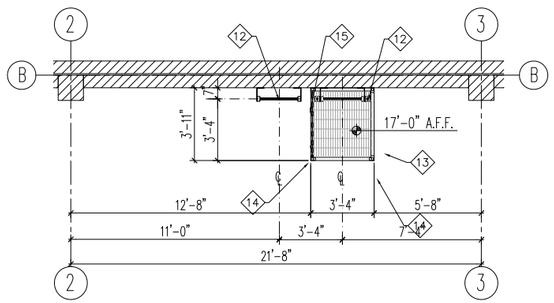

ENLARGED SAFETY PLATFORM PLAN
SCALE: 1/4" = 1'-0"
C A201

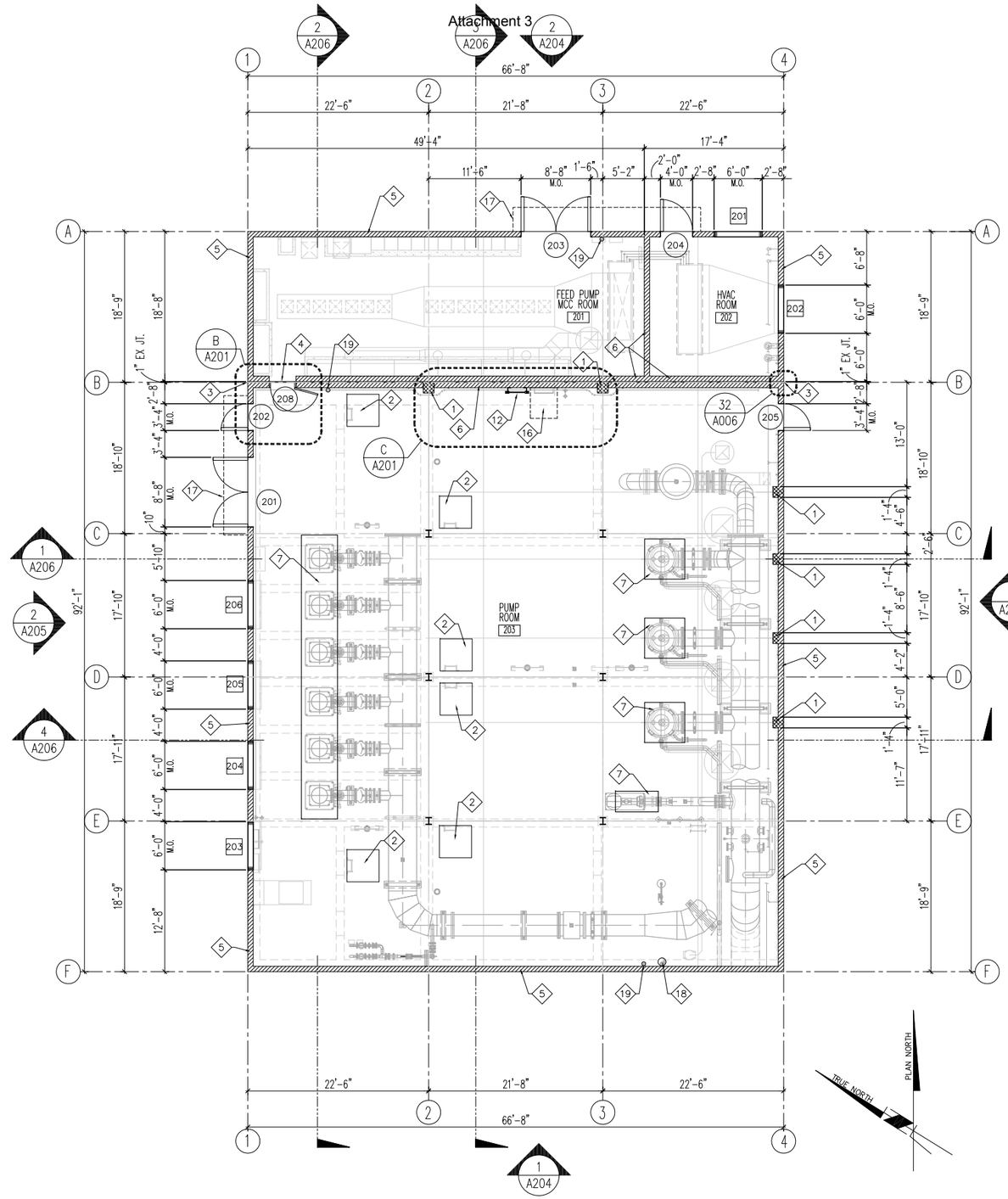

FIRST FLOOR PLAN
SCALE: 1/8" = 1'-0"
A A201

NOTES

SOC WMA

1. REFER TO GENERAL ARCHITECTURAL NOTES FOR ADDITIONAL INFORMATION AND REQUIREMENTS.
2. WHERE NO CONSTRUCTION DETAILS ARE SHOWN OR NOTED FOR ANY PART OF THE WORK, DETAILS SHALL BE THE SAME AS FOR OTHER SIMILAR WORK.
3. COORDINATE ALL UTILITY CONNECTION PRIOR TO EXECUTION OF THIS WORK.
4. SEE DOOR & OPENING SCHEDULE IN DRAWING A207.

KEY NOTES

1. CONCRETE MASONRY PILASTER, REFER TO STRUCTURAL DRAWINGS FOR ADDITIONAL INFORMATION.
2. FLOOR ACCESS HATCH, REFER TO STRUCTURAL DRAWINGS FOR ADDITIONAL INFORMATION.
3. EXTERIOR VERTICAL EXPANSION JOINT COVER
4. FLOOR EXPANSION JOINT COVER
5. 8 INCH WIDE CONCRETE MASONRY UNIT WALL. REFER TO EXTERIOR ELEVATION FOR COLOR / TEXTURE PATTERNS. REFER TO STRUCTURAL DRAWINGS FOR ADDITIONAL INFORMATION.
6. 8 INCH WIDE PRECISION FACE CONCRETE MASONRY UNIT WALL. REFER TO STRUCTURAL DRAWINGS FOR ADDITIONAL INFORMATION.
7. CONCRETE PEDESTAL FOR WATER PROCESS SYSTEM FACILITIES. REFER TO STRUCTURAL DRAWINGS FOR ADDITIONAL INFORMATION.
8. NOT USED.
9. NOT USED.
10. NOT USED.
11. NOT USED.
12. ROOF ACCESS LADDER WITH CENTER SAFETY RAIL.
13. CATWALK GRATE FOR ROOF ACCESS.
14. ALUMINUM GUARDRAIL.
15. REMOVEABLE SAFETY CHAIN GATE.
16. CATWALK ABOVE.
17. METAL CANOPY ABOVE. SEE DETAIL # 12/A009.
18. FIRE SPRINKLER RISER LOCATION.
19. FIRE EXTINGUISHER LOCATION. VERIFY EXACT LOCATION AND QUANTITY WITH FIRE AUTHORITY INSPECTOR.

8 4 0 8 16 24
SCALE: 1/8"=1'-0"

LAST SAVED BY: rcstensby LAST UPDATED: 2/1/2012 10:44am FILENAME: A201 F01 Floor Plan.dwg

No.	DATE	REVISIONS	APPROVED

DESIGNED: RBF
DRAWN: rcs
CHECKED: wdg

RBF CONSULTING

carollo

IRVINE RANCH WATER DISTRICT

WILLIAM D. GRAEBER	CA LIC NO. C11052	ARCHITECT	DATE
CINDY MILLER	RCE NO. 58116	PROJECT MANAGER	DATE
PATRICIA UEMATSU	RCE NO. 36762	PRINCIPAL ENGINEER	DATE

STATE OF CALIFORNIA WILLIAM D. GRAEBER #C11052 EXP. 5/31/2013 REGISTERED ARCHITECT

IRVINE RANCH WATER DISTRICT
BAKER WATER TREATMENT PLANT
PROJECT NO. 11218

MF FEED PUMP STATION
FIRST FLOOR PLAN & EXITING

DRAWING A201
SHEET 129 OF 632

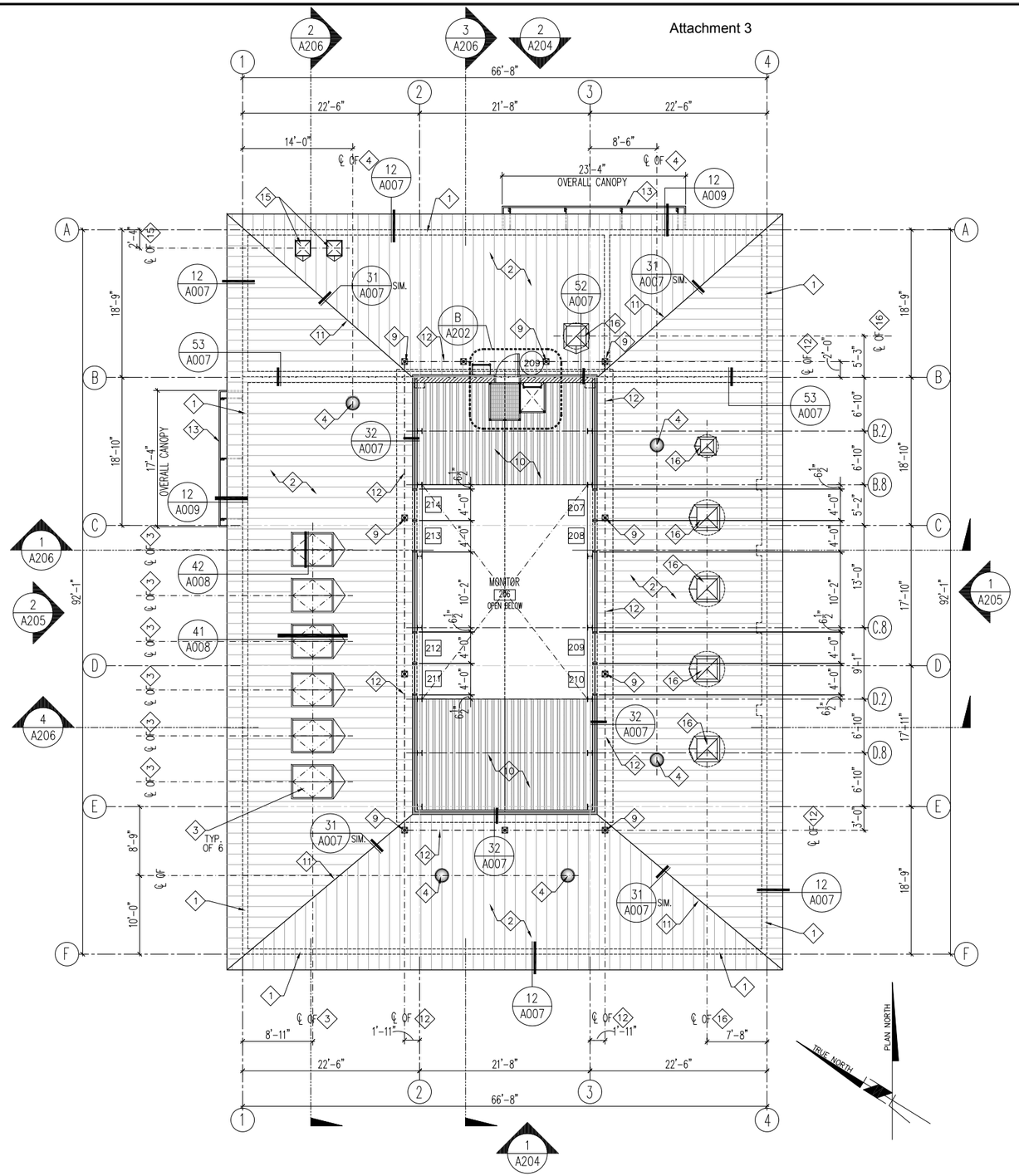

MONITOR FLOOR PLAN

SCALE: 1/8" = 1'-0"

A / A202

NOTES

1. REFER TO GENERAL ARCHITECTURAL NOTES FOR ADDITIONAL INFORMATION AND REQUIREMENTS.
2. WHERE NO CONSTRUCTION DETAILS ARE SHOWN OR NOTED FOR ANY PART OF THE WORK, DETAILS SHALL BE THE SAME AS FOR OTHER SIMILAR WORK.
3. COORDINATE ALL UTILITY CONNECTION PRIOR TO EXECUTION OF THIS WORK.
4. SEE DOOR & OPENING SCHEDULE IN DRAWING A207.

KEY NOTES

1. LINE OF BUILDING STRUCTURE BELOW.
2. STANDING SEAM METAL ROOFING OVER UNDERLAYMENT OVER OSB/POLYISOCYANURATE RIGID INSULATION OVER VAPOR BARRIER OVER STRUCTURAL ROOF DECK.
3. DOUBLE DOOR ROOF HATCH, CENTER OVER EQUIPMENT BELOW. CONTRACTOR TO VERIFY EXACT LOCATIONS PRIOR TO INSTALLATION. PAINT TO MATCH ADJACENT STANDING SEAM METAL ROOFING COLOR.
4. TUBULAR DAYLIGHT DEVICE AND ROOF FLASHING ASSEMBLY, CENTER ON STANDING SEAM OF METAL ROOFING SYSTEM. SEE DETAIL # 21 & 41/A010 FOR ADDITIONAL INFORMATION.
5. ROOF ACCESS LADDER.
6. CATWALK GRATE.
7. ALUMINUM GUARDRAIL
8. REMOVEABLE SAFETY CHAIN GATE.
9. ROOFTOP MOUNTED SAFETY LINE ANCHORAGE POST.
10. STRUCTURAL STEEL DECKING, REFER TO STRUCTURAL DRAWINGS FOR ADDITIONAL INFORMATION.
11. PRE-FINISHED SHEET METAL HIP CAP MATCH STANDING SEAM METAL ROOF COLOR.
12. SAFETY LINE CABLE.
13. METAL CANOPY BELOW.
14. NOT USED.
15. INTAKE DUCT, REFER TO MECHANICAL DRAWINGS FOR ADDITIONAL INFORMATION.
16. EXHAUST FAN, REFER TO MECHANICAL DRAWINGS FOR ADDITIONAL INFORMATION.

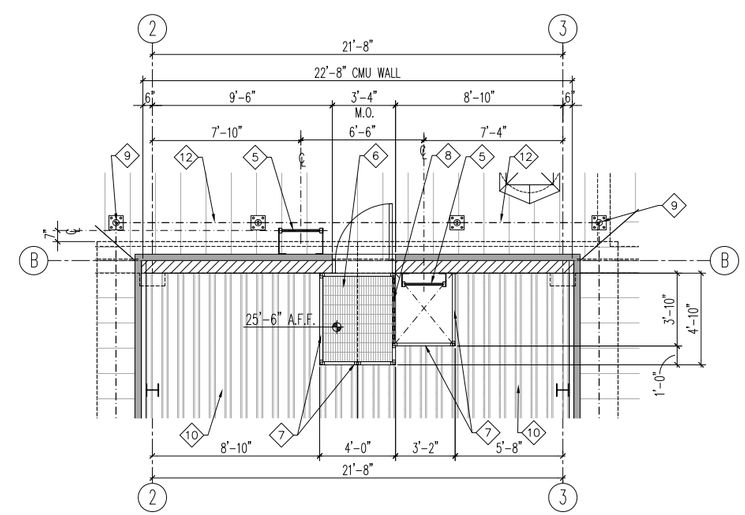

SAFETY PLATFORM PLAN

SCALE: 1/4" = 1'-0"

B / A202

8 4 0 8 16 24

SCALE: 1/8"=1'-0"

FILENAME: A202 F02 Monitor Plan.dwg LAST UPDATED: 2/1/2012 10:44am LAST SAVED BY: rcstensby

No.	DATE	REVISIONS	APPROVED

DESIGNED: RBF
DRAWN: rcs
CHECKED: wdg

RBF CONSULTING

carollo

IRVINE RANCH WATER DISTRICT

WILLIAM D. GRAEBER	CA LIC NO. C11052	ARCHITECT	DATE
CINDY MILLER	RCE NO. 58116	PROJECT MANAGER	DATE
PATRICIA UEMATSU	RCE NO. 36762	PRINCIPAL ENGINEER	DATE

STATE OF CALIFORNIA WILLIAM GRAEBER #C11052 EXPIRES 5/31/2013 REGISTERED ARCHITECT

IRVINE RANCH WATER DISTRICT
BAKER WATER TREATMENT PLANT
PROJECT NO. 11218

MF FEED PUMP STATION
MONITOR LEVEL PLAN

DRAWING A202

SHEET 130 OF 632

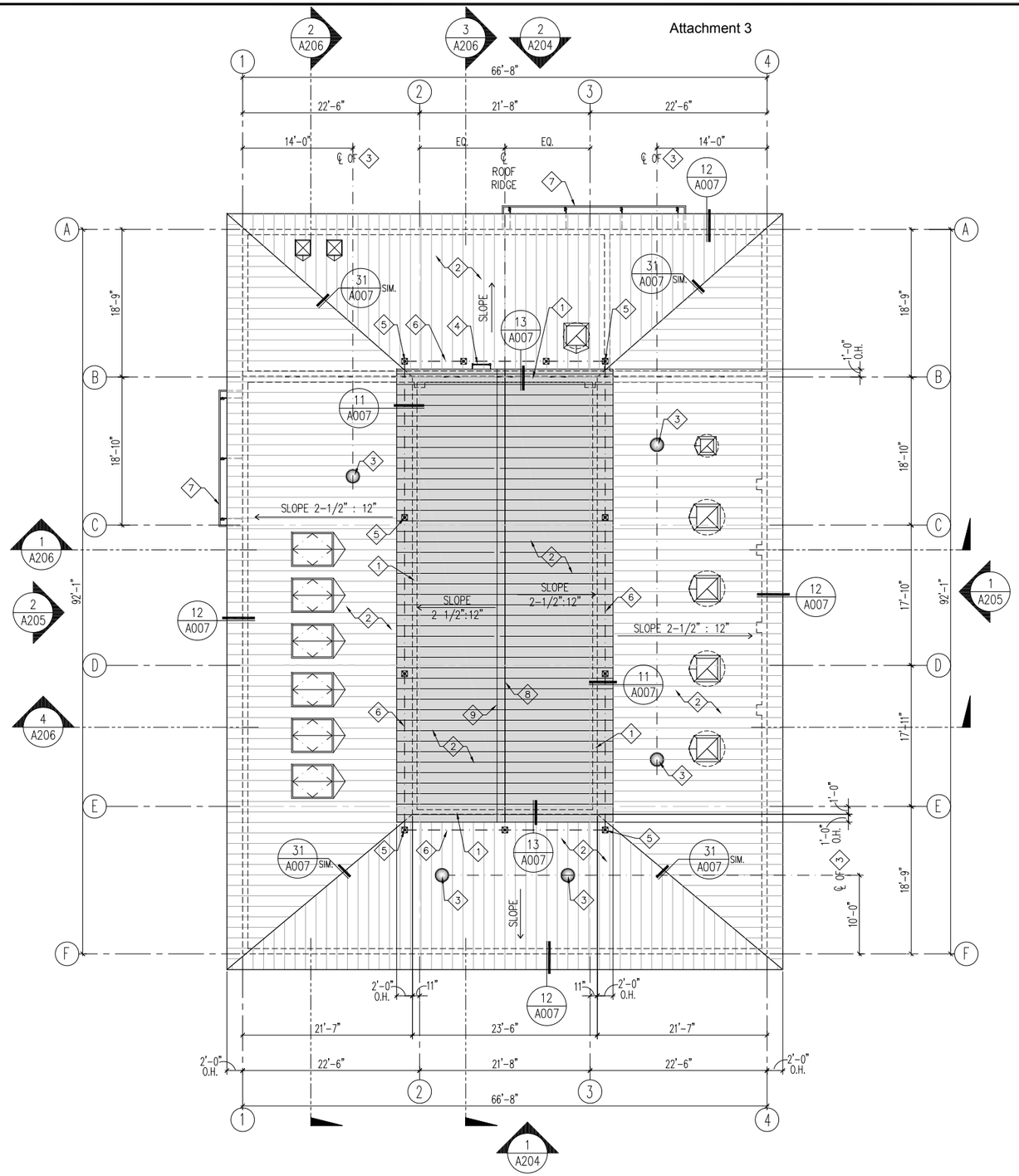

ROOF PLAN

SCALE: 1/8" = 1'-0"

NOTES

1. REFER TO GENERAL ARCHITECTURAL NOTES FOR ADDITIONAL INFORMATION AND REQUIREMENTS.
2. WHERE NO CONSTRUCTION DETAILS ARE SHOWN OR NOTED FOR ANY PART OF THE WORK, DETAILS SHALL BE THE SAME AS FOR OTHER SIMILAR WORK.
3. COORDINATE ALL UTILITY CONNECTION PRIOR TO EXECUTION OF THIS WORK.
4. SEE DOOR & OPENING SCHEDULE IN DRAWING A207.

KEY NOTES

1. LINE OF MONITOR WALL BELOW.
2. STANDING SEAM METAL ROOFING OVER UNDERLAYMENT OVER OSB/POLYISOCYANURATE RIGID INSULATION OVER VAPOR BARRIER OVER STRUCTURAL ROOF DECK.
3. TUBULAR DAYLIGHT DEVICE AND ROOF FLASHING ASSEMBLY, CENTER ON STANDING SEAM OF METAL ROOFING SYSTEM. SEE DETAIL # 21/A010 FOR ADDITIONAL INFORMATION.
4. ROOF ACCESS LADDER.
5. ROOFTOP MOUNTED SAFETY LINE ANCHORAGE POST.
6. SAFETY LINE CABLE.
7. METAL CANOPY BELOW.
8. ROOF RIDGE CAP.
9. HORIZONTAL RIDGE FALL ARREST TRACK MOUNTED TO STANDING SEAM METAL ROOF.

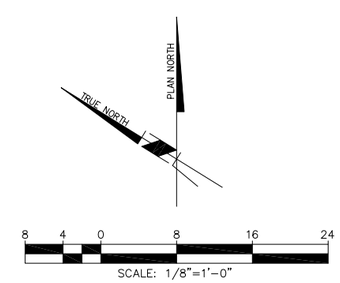

LAST SAVED BY: rcstensby LAST UPDATED: 2/1/2012 10:44am FILENAME: A203 F02 Roof.dwg

No.	DATE	REVISIONS	APPROVED

DESIGNED: RBF
DRAWN: rcs
CHECKED: wdg

RBF CONSULTING

carollo

IRVINE RANCH WATER DISTRICT

WILLIAM D. GRAEBER	CA LIC NO. C11052	ARCHITECT	DATE
CINDY MILLER	RCE NO. 58116	PROJECT MANAGER	DATE
PATRICIA UEMATSU	RCE NO. 36762	PRINCIPAL ENGINEER	DATE

STATE OF CALIFORNIA WILLIAM GRAEBER #C11052 EXPIRES 5/31/2013 REGISTERED ARCHITECT

IRVINE RANCH WATER DISTRICT
BAKER WATER TREATMENT PLANT
PROJECT NO. 11218

MF FEED PUMP STATION
ROOF PLAN

DRAWING A203

SHEET 131 OF 632

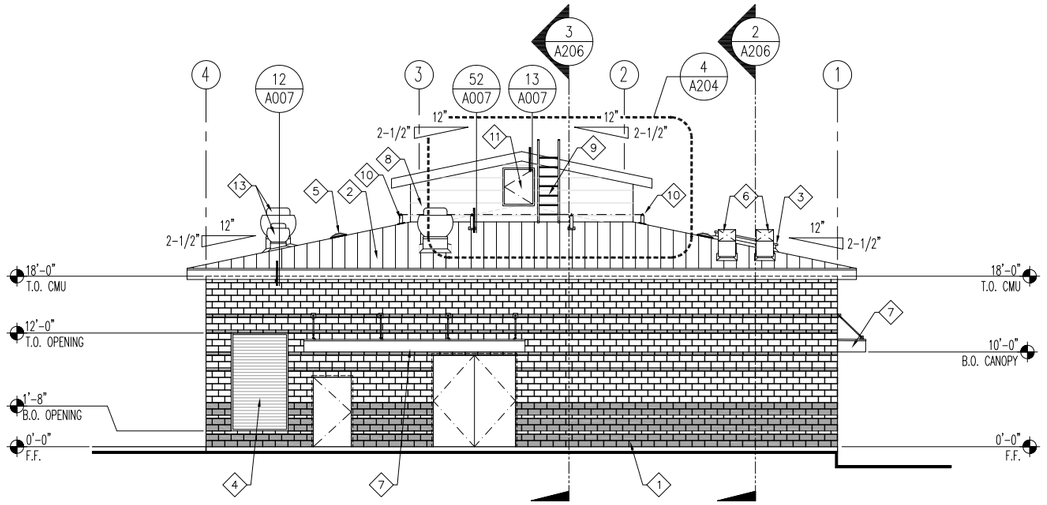

NORTH EXTERIOR ELEVATION (2 / A201)
SCALE: 1/8" = 1'-0"

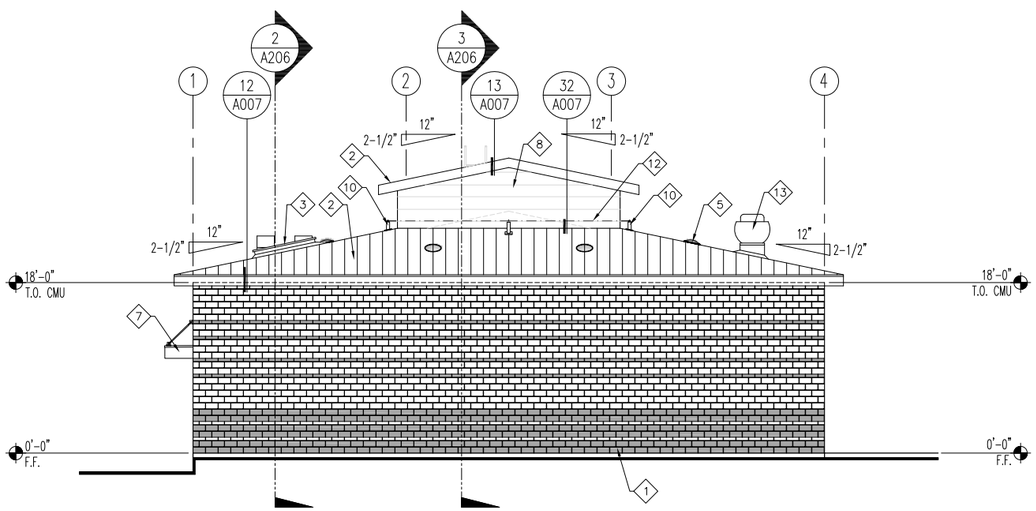

SOUTH EXTERIOR ELEVATION (1 / A201)
SCALE: 1/8" = 1'-0"

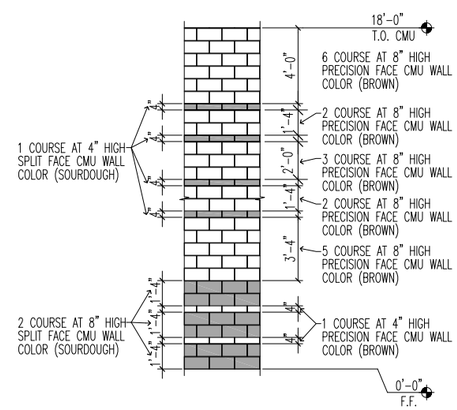

CMU WALL PATTERN (3 / A204)
SCALE: 1/4" = 1'-0"

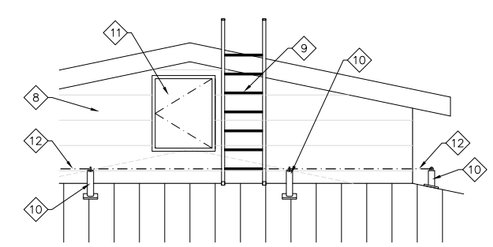

ROOF ACCESS DOOR (4 / A204)
SCALE: 1/4" = 1'-0"

8 4 0 8 16 24
SCALE: 1/8"=1'-0"

NOTES

1. REFER TO GENERAL ARCHITECTURAL NOTES FOR ADDITIONAL INFORMATION AND REQUIREMENTS.
2. WHERE NO CONSTRUCTION DETAILS ARE SHOWN OR NOTED FOR ANY PART OF THE WORK, DETAILS SHALL BE THE SAME AS FOR OTHER SIMILAR WORK.
3. COORDINATE ALL UTILITY CONNECTION PRIOR TO EXECUTION OF THIS WORK.
4. SEE DOOR & OPENING SCHEDULE IN DRAWING A207.

KEY NOTES

1. CONCRETE MASONRY UNIT WALL. SEE DETAIL # 3/A204 FOR CMU WALL PATTERN. REFER TO STRUCTURAL DRAWINGS FOR ADDITIONAL INFORMATION.
2. STANDING SEAM METAL ROOFING OVER UNDERLAYMENT OVER OSB/POLYISOCYANURATE RIGID INSULATION OVER VAPOR BARRIER OVER STRUCTURAL ROOF DECK.
3. DOUBLE DOOR ROOF HATCH, CENTER OVER EQUIPMENT BELOW. CONTRACTOR TO VERIFY EXACT LOCATIONS PRIOR TO INSTALLATION. PAINT TO MATCH ADJACENT STANDING SEAM METAL ROOFING COLOR. SEE DETAIL # 41 & 42/A008 FOR ADDITIONAL INFORMATION.
4. WALL OPENING FOR WALL LOUVER. REFER TO MECHANICAL DRAWINGS FOR ADDITIONAL INFORMATION.
5. TUBULAR DAYLIGHT DEVICE AND ROOF FLASHING ASSEMBLY, CENTER ON STANDING SEAM OF METAL
6. MAKE UP AIR DUCT FAN. REFER TO MECHANICAL DRAWINGS FOR ADDITIONAL INFORMATION.
7. METAL CANOPY. SEE DETAIL # 32 & 33/A009 FOR ADDITIONAL INFORMATION.
8. PRE-FINISHED METAL WALL PANEL ASSEMBLY. SEE DETAIL # 11/A008 FOR ADDITIONAL INFORMATION
9. ROOF ACCESS LADDER.
10. ROOFTOP MOUNTED SAFETY LINE ANCHORAGE POST.
11. ROOF ACCESS DOOR.
12. SAFETY LINE CABLE.
13. EXHAUST FAN. REFER TO MECHANICAL DRAWINGS FOR ADDITIONAL INFORMATION.

FILENAME: A204 Exterior Elevations I.dwg
LAST UPDATED: 2/1/2012 10:44am
LAST SAVED BY: rcstensby

No.	DATE	REVISIONS	APPROVED

DESIGNED: RBF
DRAWN: rcs
CHECKED: wdg

RBF CONSULTING
carollo
IRVINE RANCH WATER DISTRICT

WILLIAM D. GRAEBER	CA LIC NO. C11052	ARCHITECT	DATE
CINDY MILLER	RCE NO. 58116	PROJECT MANAGER	DATE
PATRICIA UEMATSU	RCE NO. 36762	PRINCIPAL ENGINEER	DATE

STATE OF CALIFORNIA — WILLIAM D. GRAEBER — #C11052 — 5/31/2013 — REGISTERED ARCHITECT

IRVINE RANCH WATER DISTRICT
BAKER WATER TREATMENT PLANT
PROJECT NO. 11218

MF FEED PUMP STATION
EXTERIOR ELEVATIONS I

DRAWING A204
SHEET 132 OF 632

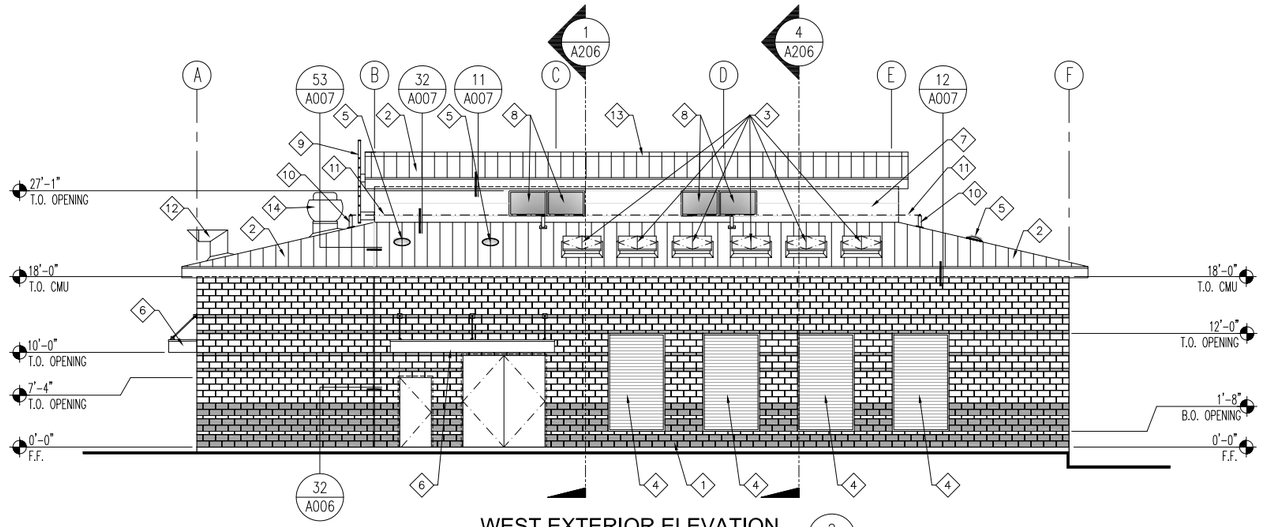

WEST EXTERIOR ELEVATION (2 / A201)

SCALE: 1/8" = 1'-0"

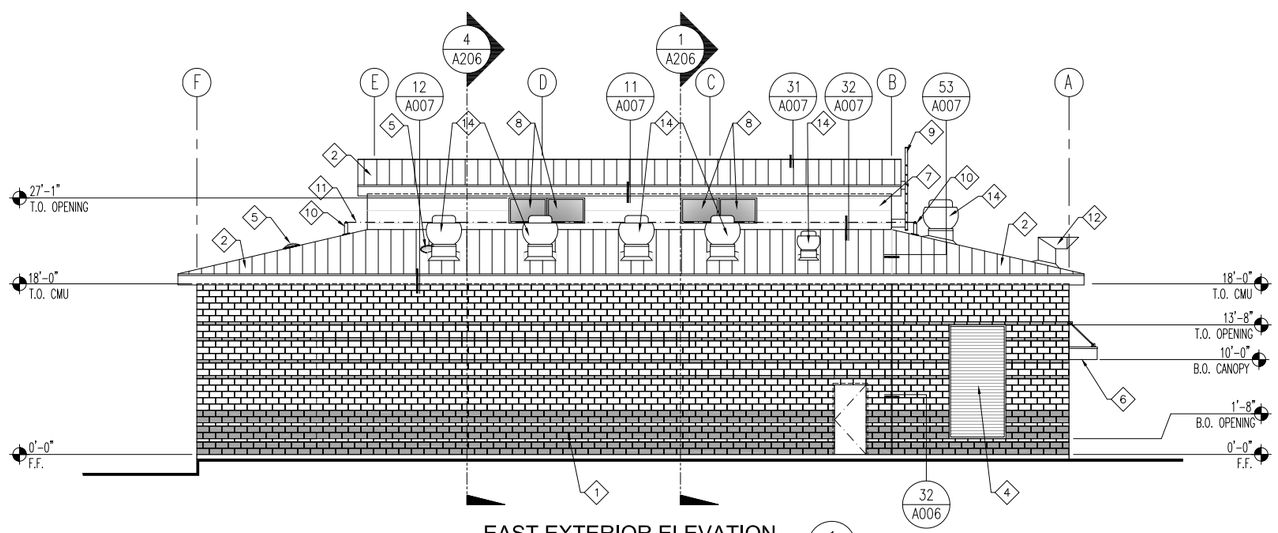

EAST EXTERIOR ELEVATION (1 / A201)

SCALE: 1/8" = 1'-0"

NOTES

1. REFER TO GENERAL ARCHITECTURAL NOTES FOR ADDITIONAL INFORMATION AND REQUIREMENTS.
2. WHERE NO CONSTRUCTION DETAILS ARE SHOWN OR NOTED FOR ANY PART OF THE WORK, DETAILS SHALL BE THE SAME AS FOR OTHER SIMILAR WORK.
3. COORDINATE ALL UTILITY CONNECTION PRIOR TO EXECUTION OF THIS WORK.
4. SEE DOOR & OPENING SCHEDULE IN DRAWING A207.

KEY NOTES

1. CONCRETE MASONRY UNIT WALL. SEE DETAIL # 3/A204 FOR CMU WALL PATTERN. REFER TO STRUCTURAL DRAWINGS FOR ADDITIONAL INFORMATION.
2. STANDING SEAM METAL ROOFING OVER UNDERLAYMENT OVER OSB/POLYISOCYANURATE RIGID INSULATION OVER VAPOR BARRIER OVER STRUCTURAL ROOF DECK.
3. DOUBLE DOOR ROOF HATCH, CENTER OVER EQUIPMENT BELOW. CONTRACTOR TO VERIFY EXACT LOCATIONS PRIOR TO INSTALLATION. PAINT TO MATCH ADJACENT STANDING SEAM METAL ROOFING COLOR. SEE DETAIL # 41 & 42/A008 FOR ADDITIONAL INFORMATION.
4. WALL OPENING FOR WALL LOUVER. REFER TO MECHANICAL DRAWINGS FOR ADDITIONAL INFORMATION.
5. TUBULAR DAYLIGHT DEVICE AND ROOF FLASHING ASSEMBLY, CENTER ON STANDING SEAM OF METAL ROOFING SYSTEM. SEE DETAIL # 21 & 41/A010 FOR ADDITIONAL INFORMATION.
6. METAL CANOPY, SEE DETAIL # 32 & 33/A009 FOR ADDITIONAL INFORMATION.
7. PRE-FINISHED METAL WALL PANEL ASSEMBLY. SEE DETAIL # 11/A008 FOR ADDITIONAL INFORMATION.
8. WALL OPENING FOR WALL GLAZING. REFER TO OPENING SCHEDULE SHEET A207 FOR ADDITIONAL INFORMATION.
9. ROOF ACCESS LADDER.
10. ROOFTOP MOUNTED SAFETY LINE ANCHORAGE POST.
11. SAFETY LINE CABLE.
12. MAKE UP AIR DUCT FAN. REFER TO MECHANICAL DRAWINGS FOR ADDITIONAL INFORMATION.
13. HORIZONTAL RIDGE FALL ARREST TRACK.
14. EXHAUST FAN. REFER TO MECHANICAL DRAWINGS FOR ADDITIONAL INFORMATION.

8 4 0 8 16 24

SCALE: 1/8"=1'-0"

LAST SAVED BY: rcstensby LAST UPDATED: 2/1/2012 10:44am FILENAME: A205 Exterior Elevations II.dwg

No.	DATE	REVISIONS	APPROVED

DESIGNED: RBF
DRAWN: rcs
CHECKED: wdg

RBF CONSULTING

carollo

IRVINE RANCH WATER DISTRICT

WILLIAM D. GRAEBER	CA LIC NO. C11052	ARCHITECT	DATE
CINDY MILLER	RCE NO. 58116	PROJECT MANAGER	DATE
PATRICIA UEMATSU	RCE NO. 36762	PRINCIPAL ENGINEER	DATE

STATE OF CALIFORNIA WILLIAM D. GRAEBER #C11052 EXPIRES 5/31/2013 REGISTERED ARCHITECT

IRVINE RANCH WATER DISTRICT
BAKER WATER TREATMENT PLANT
PROJECT NO. 11218

MF FEED PUMP STATION
EXTERIOR ELEVATIONS II

DRAWING A205

SHEET 133 OF 632

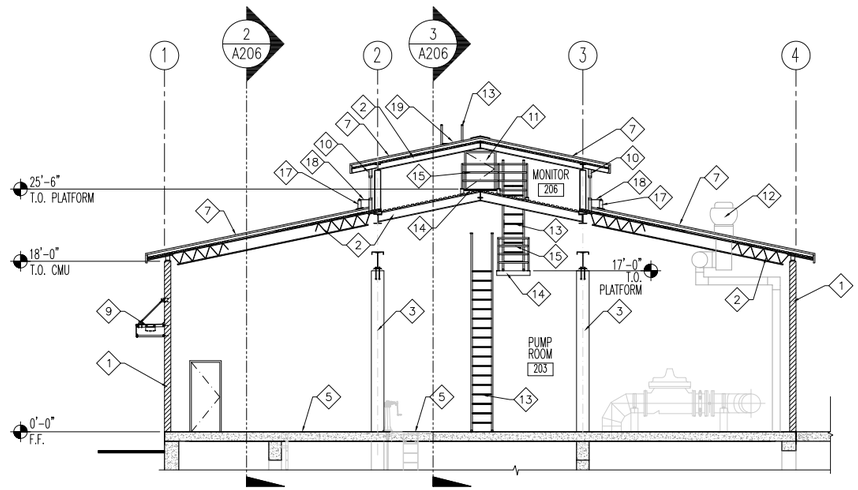

BUILDING SECTION
SCALE: 1/8" = 1'-0"
4 A201

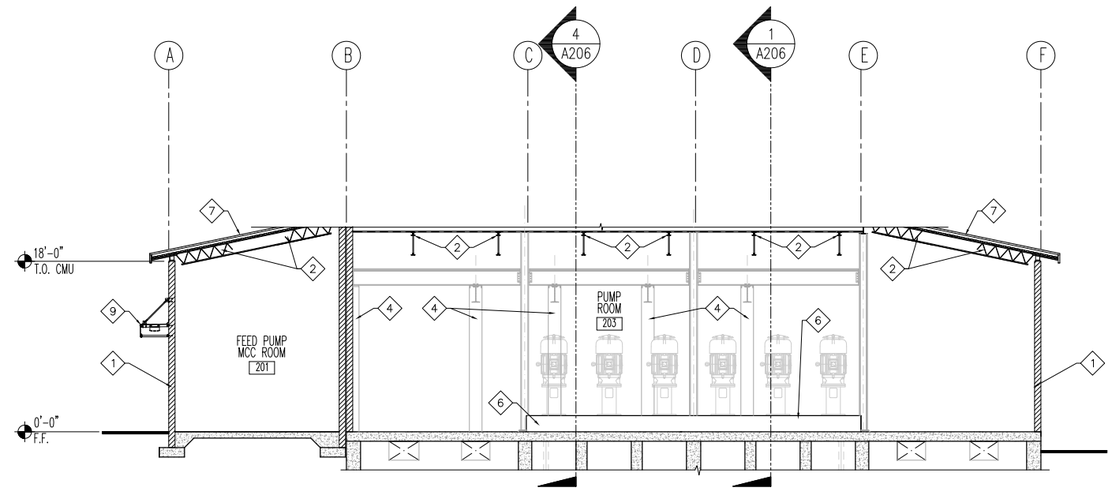

BUILDING SECTION
SCALE: 1/8" = 1'-0"
2 A201

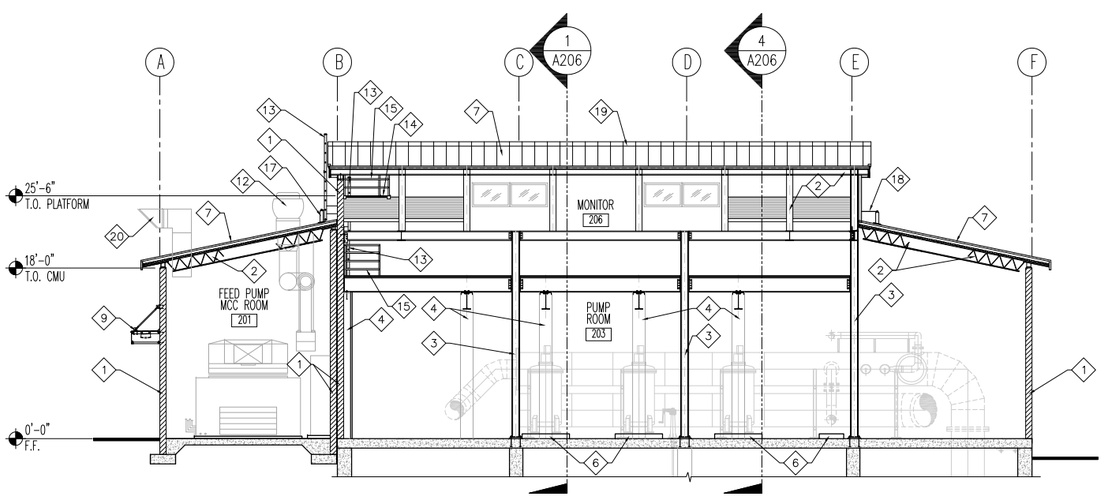

BUILDING SECTION
SCALE: 1/8" = 1'-0"
3 A201

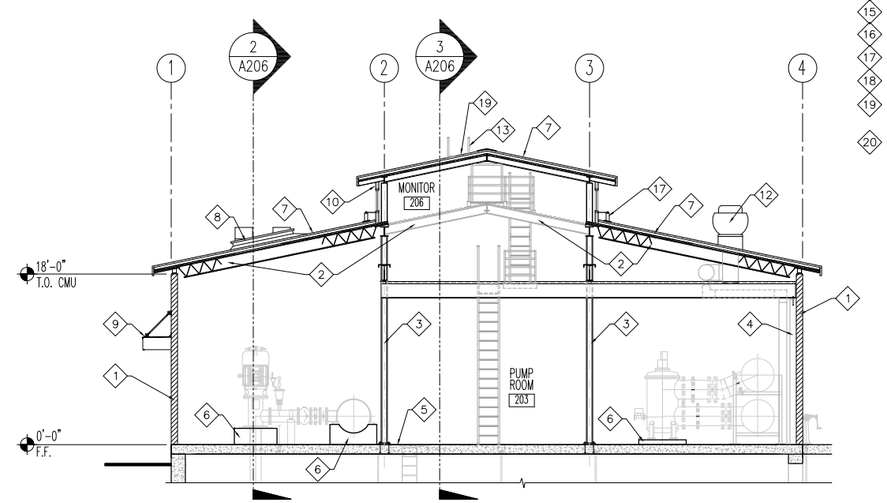

BUILDING SECTION
SCALE: 1/8" = 1'-0"
1 A201

NOTES

1. REFER TO GENERAL ARCHITECTURAL NOTES FOR ADDITIONAL INFORMATION AND REQUIREMENTS.
2. WHERE NO CONSTRUCTION DETAILS ARE SHOWN OR NOTED FOR ANY PART OF THE WORK, DETAILS SHALL BE THE SAME AS FOR OTHER SIMILAR WORK.
3. COORDINATE ALL UTILITY CONNECTION PRIOR TO EXECUTION OF THIS WORK.

KEY NOTES

1. CONCRETE MASONRY UNIT WALL. REFER TO STRUCTURAL DRAWINGS FOR ADDITIONAL INFORMATION.
2. STRUCTURAL FRAMING SYSTEM, REFER TO STRUCTURAL DRAWINGS FOR ADDITIONAL INFORMATION.
3. STRUCTURAL COLUMN SYSTEM, REFER TO STRUCTURAL DRAWINGS FOR ADDITIONAL INFORMATION.
4. CONCRETE MASONRY UNIT PILASTER, REFER TO STRUCTURAL DRAWINGS FOR ADDITIONAL INFORMATION.
5. FLOOR ACCESS HATCH, REFER TO STRUCTURAL DRAWINGS FOR ADDITIONAL INFORMATION.
6. CONCRETE PEDESTAL FOR WATER PROCESS SYSTEM FACILITIES. REFER TO STRUCTURAL DRAWINGS FOR ADDITIONAL INFORMATION.
7. STANDING SEAM METAL ROOFING OVER UNDERLAYMENT OVER OSB/POLYISOCYANURATE RIGID INSULATION OVER VAPOR BARRIER OVER STRUCTURAL ROOF DECK.
8. DOUBLE DOOR ROOF HATCH, CENTER OVER EQUIPMENT BELOW. CONTRACTOR TO VERIFY EXACT LOCATIONS PRIOR TO INSTALLATION.
9. METAL CANOPY ASSEMBLY, SEE DETAIL # 32 & 33/A009 FOR ADDITIONAL INFORMATION.
10. PRE-FINISHED METAL WALL PANEL ASSEMBLY. SEE DETAIL # 11/A008 FOR ADDITIONAL INFORMATION.
11. ROOF ACCESS DOOR.
12. EXHAUST FAN. REFER TO MECHANICAL DRAWINGS FOR ADDITIONAL INFORMATION.
13. ROOF ACCESS LADDER
14. CATWALK GRATE FOR ROOF ACCESS.
15. ALUMINUM GUARDRAIL.
16. REMOVEABLE SAFETY CHAIN GATE
17. ROOFTOP MOUNTED SAFETY LINE ANCHORAGE POST
18. SAFETY LINE CABLE
19. HORIZONTAL RIDGE FALL ARREST TRACK MOUNTED TO STANDING SEAM METAL ROOF.
20. MAKE UP AIR DUCT FAN. REFER TO MECHANICAL DRAWINGS FOR ADDITIONAL INFORMATION.

8 4 0 8 16 24
SCALE: 1/8"=1'-0"

FILENAME: A206 Building Sections.dwg
LAST UPDATED: 2/1/2012 10:45am
LAST SAVED BY: rcstensby

No.	DATE	REVISIONS	APPROVED

DESIGNED: RBF
DRAWN: rcs
CHECKED: wdg

RBF CONSULTING
carollo
IRVINE RANCH WATER DISTRICT

WILLIAM D. GRAEBER CA LIC NO. C11052 ARCHITECT DATE
CINDY MILLER RCE NO. 58116 PROJECT MANAGER DATE
PATRICIA UEMATSU RCE NO. 36762 PRINCIPAL ENGINEER DATE

STATE OF CALIFORNIA WILLIAM GRAEBER #C11052 EXPIRES 6/30/2013 REGISTERED ARCHITECT

IRVINE RANCH WATER DISTRICT
BAKER WATER TREATMENT PLANT
PROJECT NO. 11218

MF FEED PUMP STATION
BUILDING SECTIONS

DRAWING
A206
SHEET
134 OF 632

LEGEND

MATERIALS:

FLOOR
- FL1 CONCRETE
- FL2 VINYL COMP.TILE
- FL3 SHEET VINYL
- FL4 CERAMIC TILE
- FL5 CARPET TILE
- FL6 STEEL GRATE

BASE
- B1 TOP SET – RUBBER
- B2 CERAMIC TILE BASE
- B3 CONCRETE CURB 12" HIGH

WALL
- W1 GYP. BD.
- W2 W.R. GYP. BD.
- W3 METAL WALL PANEL
- W4 CONCRETE MASONRY UNITS
- W5 CONCRETE
- W6 CERAMIC TILE
- W7 FRP PANEL FULL HEIGHT
- W8 FRP PANELS AT 6'–0" WAINSCOT HEIGHT

CEILING
- C1 GYP. BD.
- C2 F.R. GYP. BD.
- C3 EXPOSED CONSTRUCTION
- C4 2' x 4' LAY–IN ACOUSTIC CEILING PANELS
- C5 FULL ROOM ACOUSTIC INSULATION ABOVE FINISH CEILING

DOOR
- D1 WOOD
- D2 HOLLOW METAL
- D3 ALUMINUM
- D4 GLASS
- D5 STEEL

DOOR FRAME
- DF1 WOOD
- DF2 HOLLOW METAL
- DF3 STEEL
- DF4 ALUMINUM

CORE/GLASS
- CG1 HOLLOW
- CG2 SOLID
- CG3 GLASS
- CG4 WOOD & TEMP. GLASS
- CG5 RIGID INSULATION
- CG6 GLASS BLOCK

WINDOW
- WW1 WOOD

WINDOW FRAME
- WF1 WOOD
- WF2 ALUM.
- WF3 HOLLOW METAL

LOUVER
- L1 PRE–FINISH LOUVER ASSEMBLY

FINISHES:

- F1 FACTORY FINISH
- F2 GLAZED
- F3 STAIN (PREFINISHED)
- F4 PRIMED & PAINTED
- F5 SEALED CONCRETE
- F6 STAINED AND SEALED
- F7 FACTORY FINISH T–BAR
- F8 EXPOSED CONSTRUCTION
- F9 WATER REPELLANT COATING

ROOM FINISH SCHEDULE

ROOM NO.	ROOM NAME	FLOOR		BASE		WALLS								CEILING			REMARKS
						NORTH		EAST		SOUTH		WEST					
		MATL.	FIN.	MATL.	FIN.	MATL.	FIN.	MATL.	FIN.	MATL.	FIN.	MATL.	FIN.	MATL.	FIN.	HEIGHT	
201	FEED PUMP MCC ROOM	FL1	F5	–	–	W4	F9	W4	F9	W4	F9	W4	F9	C3	F9	VARIES	–
202	HVAC ROOM	FL1	F5	–	–	W4	F9	W4	F9	W4	F9	W4	F9	C3	F9	VARIES	–
203	PUMP ROOM	FL1	F5	–	–	W4	F9	W4	F9	W4	F9	W4	F9	C3	F9	VARIES	–
204	NOT USED																–
205	NOT USED																–
206	MONITOR	–	–	–	–	W3	F1	W3	F1	W3	F1	W3	F1	C3	F9	VARIES	–

OPENING SCHEDULE (WINDOWS/LOUVERS/MASONRY OPENINGS)

OPENING NO.	OPENING							GLASS		LOUVER				DETAILS				REMARKS
	WIDTH	HEIGHT	THICKNESS	TYPE	MATERIAL	FINISH	LABEL	CORE	THICK	TYPE	THICK	MATERIAL	FINISH	HEAD	JAMB	JAMB	SILL	
201	6'–0"	10'–4"	8"	–	–	–	–	–	–	A	8"	L1	F1	11/A005	12/A005	12/A005	13/A005	1, 6, 8
202	6'–0"	12'–0"	8"	–	–	–	–	–	–	A	8"	L1	F1	11/A005	12/A005	12/A005	13/A005	1, 6, 8
203	6'–0"	7'–4"	8"	–	–	–	–	–	–	A	8"	L1	F1	11/A005	12/A005	12/A005	13/A005	1, 6, 8
204	6'–0"	7'–4"	8"	–	–	–	–	–	–	A	8"	L1	F1	11/A005	12/A005	12/A005	13/A005	1, 6, 8
205	6'–0"	7'–4"	8"	–	–	–	–	–	–	A	8"	L1	F1	11/A005	12/A005	12/A005	13/A005	1, 6, 8
206	6'–0"	7'–4"	8"	–	–	–	–	–	–	A	8"	L1	F1	11/A005	12/A005	12/A005	13/A005	1, 6, 8
207	4'–0"	2'–8"	7"	B	WF3	F1	–	CG4	1/4"	–	–	–	–	51/A005	51/A005	51/A005	52/A005	1, 10,
208	4'–0"	2'–8"	7"	B	WF3	F1	–	CG4	1/4"	–	–	–	–	51/A005	51/A005	51/A005	52/A005	1, 10,
209	4'–0"	2'–8"	7"	B	WF3	F1	–	CG4	1/4"	–	–	–	–	51/A005	51/A005	51/A005	52/A005	1, 10,
210	4'–0"	2'–8"	7"	B	WF3	F1	–	CG4	1/4"	–	–	–	–	51/A005	51/A005	51/A005	52/A005	1, 10,
211	4'–0"	2'–8"	7"	B	WF3	F1	–	CG4	1/4"	–	–	–	–	51/A005	51/A005	51/A005	52/A005	1, 10,
212	4'–0"	2'–8"	7"	B	WF3	F1	–	CG4	1/4"	–	–	–	–	51/A005	51/A005	51/A005	52/A005	1, 10,
213	4'–0"	2'–8"	7"	B	WF3	F1	–	CG4	1/4"	–	–	–	–	51/A005	51/A005	51/A005	52/A005	1, 10,
214	4'–0"	2'–8"	7"	B	WF3	F1	–	CG4	1/4"	–	–	–	–	51/A005	51/A005	51/A005	52/A005	1, 10,

DOOR SCHEDULE

DOOR NO.	OPENING		DOOR					FRAME		HARDWARE SET #	LABEL	DETAILS				REMARKS
	WIDTH	HEIGHT	THICKNESS	TYPE	MATERIAL	FINISH	CORE / GL	MATERIAL	FINISH			HEAD	JAMB	JAMB	THRESHOLD	
201	8'–8"	9'–8"	1 3/4"	CC	D2	F4	CG2	DF2	F4	–	–	51/A004	51/A004	51/A004	52/A004	1, 2, 3, 4, 5, 6, 9, 11, 12
202	3'–4"	7'–4"	1 3/4"	DD	D2	F4	CG2	DF2	F4	–	–	51/A004	51/A004	51/A004	52/A004	1, 2, 5, 6, 7, 9, 11, 12
203	8'–8"	9'–8"	1 3/4"	CC	D2	F4	CG2	DF2	F4	–	–	51/A004	51/A004	51/A004	52/A004	1, 2, 3, 4, 5, 6, 7, 9, 11, 12
204	4'–0"	7'–4"	1 3/4"	DD	D2	F4	CG2	DF2	F4	–	–	51/A004	51/A004	51/A004	52/A004	1, 2, 5, 6, 7, 9, 11, 12
205	3'–4"	7'–4"	1 3/4"	DD	D2	F4	CG2	DF2	F4	–	–	51/A004	51/A004	51/A004	52/A004	1, 2, 5, 6, 7, 9, 11, 12
208	3'–4"	7'–4"	1 3/4"	AA	D2	F4	CG2	DF2	F4	–	–	41/A004	41/A004	41/A004	43/A004	2, 3, 5, 6, 9, 11
209	3'–4"	3'–8"	1 3/4"	AA	D2	F4	CG2	DF2	F4	–	–	31/A004	31/A004	31/A004	53/A004	1, 6, 11

DOOR TYPE

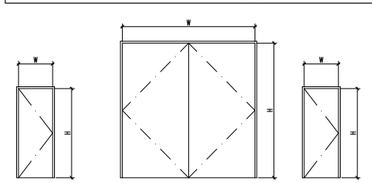

AA
BASIC
FLUSH DOOR

CC
ACOUSTIC
DOUBLE DOOR

DD
ACOUSTIC
SINGLE DOOR

NOTES

SOC WMA

1. REFER TO GENERAL ARCHITECTURAL NOTES FOR ADDITIONAL INFORMATION AND REQUIREMENTS.
2. WHERE NO CONSTRUCTION DETAILS ARE SHOWN OR NOTED FOR ANY PART OF THE WORK, DETAILS SHALL BE THE SAME AS FOR OTHER SIMILAR WORK.

OPENING TYPE

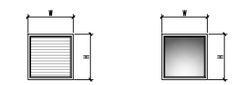

A
FIXED LOUVER

B
FIXED WINDOW

DOOR & OPENING NOTES

1. PROVIDE FULL WEATHERSTRIPPING PERIMETER OF FRAME.
2. PROVIDE OVERHEAD DOOR CLOSER.
3. PROVIDE PANIC HARDWARE AT ACTIVE LEAF.
4. PROVIDE COORDINATOR ASTRAL AND SEALS.
5. PROVIDE DOOR STOP.
6. ALL DOORS & FRAME TO BE "MAXIMUM DUTY" MODEL 2 SEAMLESS.
7. ACCESS CONTROL SYSTEM READER/KEYPAD & DOOR RELEASE.
8. PROVIDE INSECT SCREEN AT INTERIOR SIDE OF LOUVER PANELS.
9. PROVIDE DOOR BOTTOM SEAL(S).
10. DUAL GLAZED WINDOW IN WINDOW FRAME.
11. PROVIDE DOOR SIGNAGE AS REQUIRED PER 13/A002.
12. ALL EXIT DOORS SHALL BE OPERABLE FROM THE INSIDE WITHOUT KEY OR SPECIAL KNOWLEDGE OR EFFORT. ANY LOCKS ON EXIT DOORS MUST BE RELEASED BY NORMAL OPERATION FROM THE INSIDE WITHOUT KEY OR SPECIAL KNOWLEDGE OR EFFORT (EXIT HANDLES OR PANIC BARS MUST RELEASE LOCKS) PER SECTION 1003.0.1.8.

LAST SAVED BY: rcstensby LAST UPDATED: 2/1/2012 10:45am FILENAME: A207 Door Opening Finish Schedules.dwg

No.	DATE	REVISIONS	APPROVED

DESIGNED: RBF
DRAWN: rcs
CHECKED: wdg

RBF CONSULTING

carollo

IRVINE RANCH WATER DISTRICT

WILLIAM D. GRAEBER CA LIC NO. C11052 ARCHITECT DATE
CINDY MILLER RCE NO. 58116 PROJECT MANAGER DATE
PATRICIA UEMATSU RCE NO. 36762 PRINCIPAL ENGINEER DATE

STATE OF CALIFORNIA WILLIAM D. GRAEBER #C11052 EXPIRES 5/31/2013 REGISTERED ARCHITECT

IRVINE RANCH WATER DISTRICT
BAKER WATER TREATMENT PLANT
PROJECT NO. 11218

MF FEED PUMP STATION
DOOR, OPENING & FINISH SCHEDULE

DRAWING A207

SOC WMA

NOTES

1. REFER TO GENERAL ARCHITECTURAL NOTES FOR ADDITIONAL INFORMATION AND REQUIREMENTS.
2. WHERE NO CONSTRUCTION DETAILS ARE SHOWN OR NOTED FOR ANY PART OF THE WORK, DETAILS SHALL BE THE SAME AS FOR OTHER SIMILAR WORK.
3. COORDINATE ALL UTILITY CONNECTION PRIOR TO EXECUTION OF THIS WORK.

KEY NOTES

1. ACCESS HATCH, REFER TO MECHANICAL DRAWINGS FOR ADDITIONAL INFORMATION
2. CAST-IN-PLACE CONCRETE WALL. REFER TO STRUCTURAL DRAWINGS FOR ADDITIONAL INFORMATION.
3. FIBERGLASS STAIR ASSEMBLY. REFER TO STRUCTURAL DRAWINGS FOR ADDITIONAL INFORMATION.
4. CAST-IN-PLACE CONCRETE STAIR. REFER TO STRUCTURAL DRAWINGS FOR ADDITIONAL INFORMATION.
5. LINE OF STRUCTURE ABOVE.
6. LINE OF FLOOR ACCESS HATCH ABOVE.
7. CONCRETE CONTROL JOINT. SEE STRUCTURAL FOR ADDITIONAL INFORMATION.
8. SLOPED CONCRETE SLAB IN EQUALIZATION BASIN. SEE STRUCTURAL FOR ADDITIONAL INFORMATION.
9. SUMP, SEE STRUCTURAL DRAWINGS FOR ADDITIONAL INFORMATION.
10. FIRE EXTINGUISHER LOCATION. VERIFY EXACT LOCATION AND QUANTITY WITH FIRE AUTHORITY.

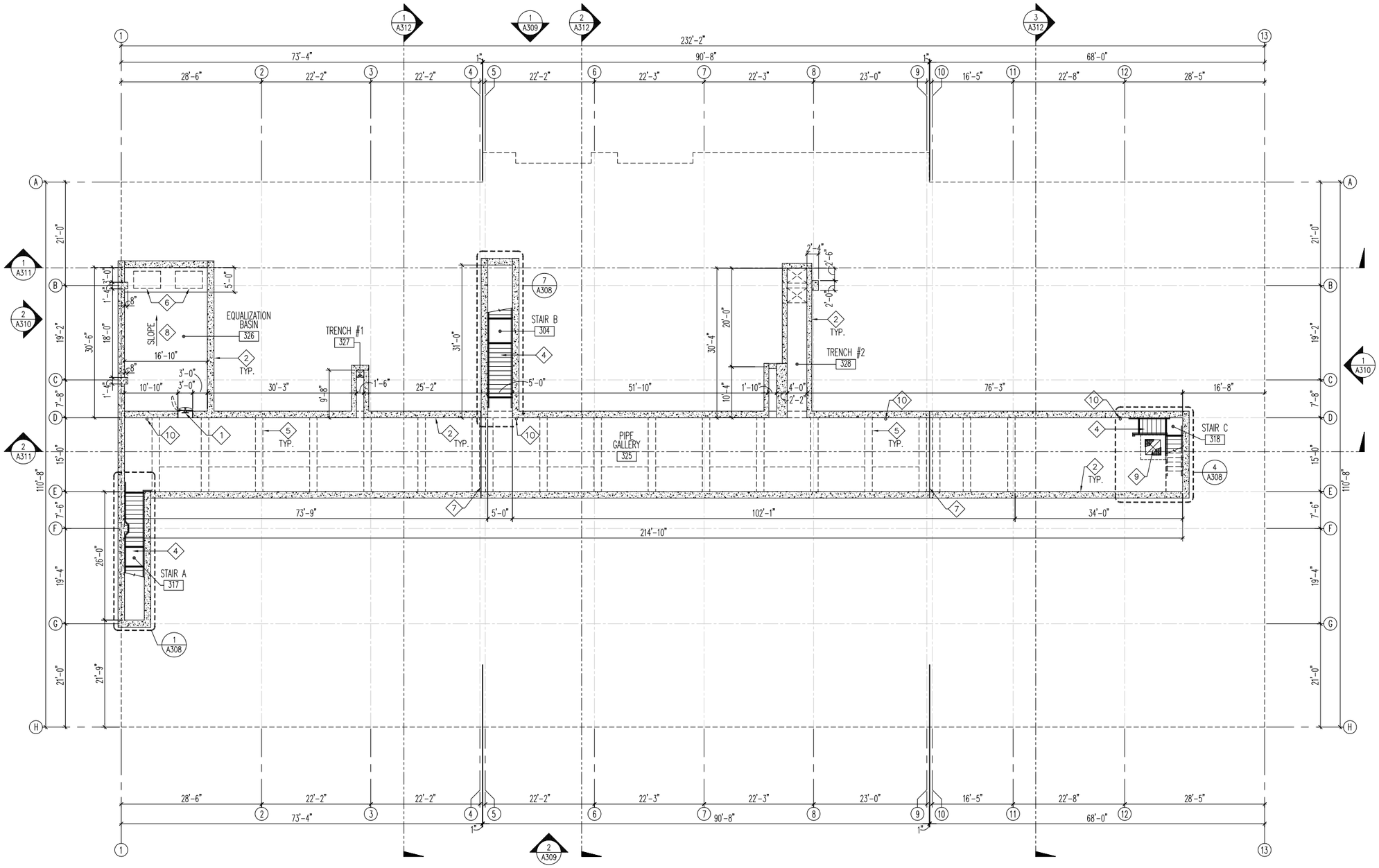

LOWER FLOOR PLAN
SCALE: 3/32" = 1'-0"

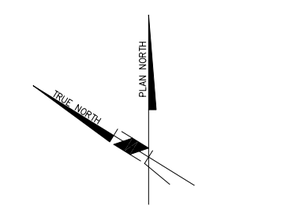

SCALE: 3/32" = 1'-0"

FILENAME: A301 Lower Floor Plan.dwg
LAST UPDATED: 2/1/2012 10:54am
LAST SAVED BY: rcstensby

No.	DATE	REVISIONS	APPROVED

DESIGNED: RBF
DRAWN: rcs
CHECKED: wdg

RBF CONSULTING

carollo

IRVINE RANCH WATER DISTRICT

WILLIAM D. GRAEBER	CA LIC NO. C11052	ARCHITECT	DATE
CINDY MILLER	RCE NO. 58116	PROJECT MANAGER	DATE
PATRICIA UEMATSU	RCE NO. 36762	PRINCIPAL ENGINEER	DATE

STATE OF CALIFORNIA WILLIAM D. GRAEBER #C11052 EXPIRES 5/31/2013 REGISTERED ARCHITECT

IRVINE RANCH WATER DISTRICT
BAKER WATER TREATMENT PLANT
PROJECT NO. 11218

TREATMENT BUILDING
LOWER FLOOR PLAN

DRAWING
A301

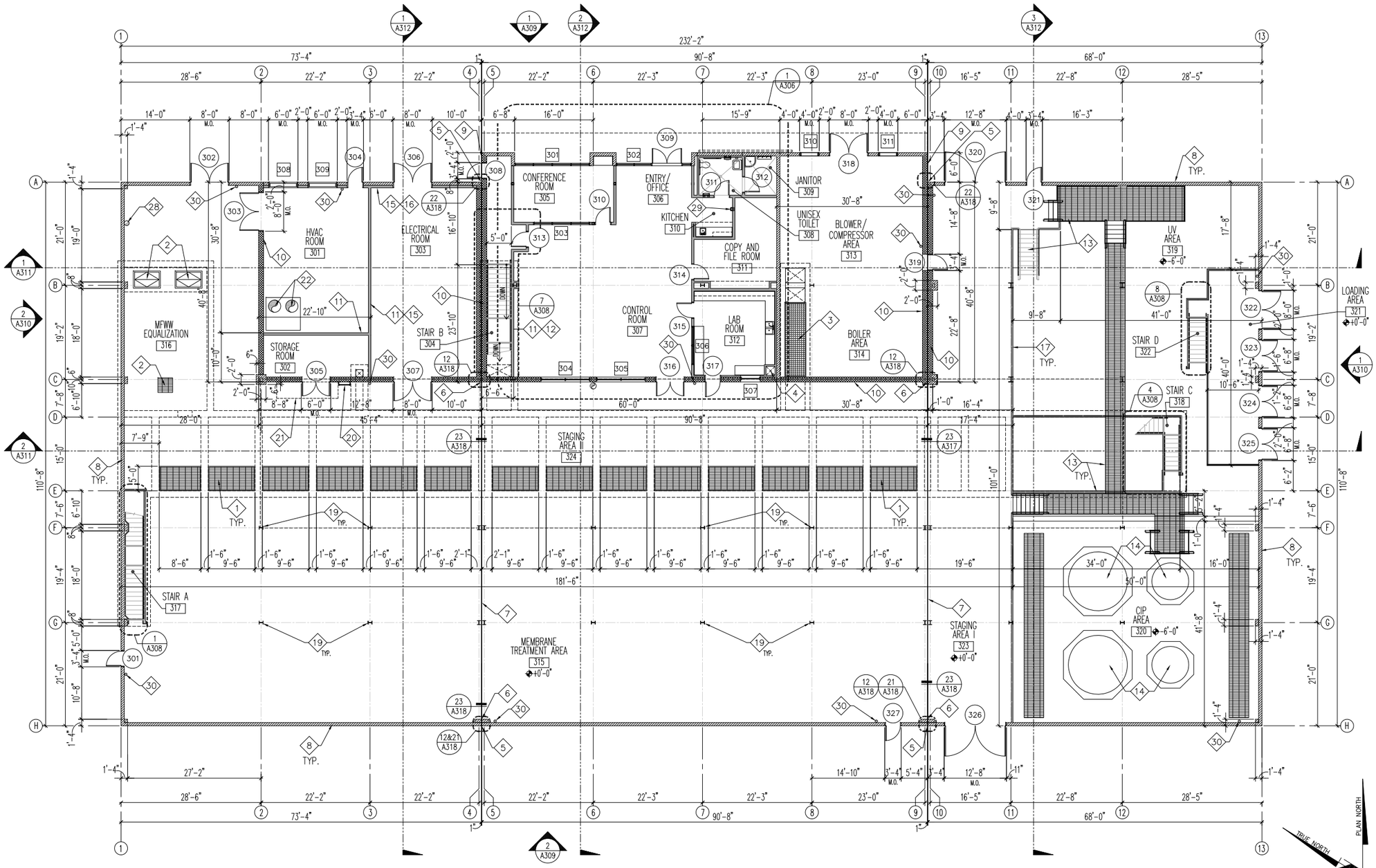

FIRST FLOOR PLAN

SCALE: 3/32" = 1'-0"

NOTES

1. REFER TO GENERAL ARCHITECTURAL NOTES FOR ADDITIONAL INFORMATION AND REQUIREMENTS.
2. WHERE NO CONSTRUCTION DETAILS ARE SHOWN OR NOTED FOR ANY PART OF THE WORK, DETAILS SHALL BE THE SAME AS FOR OTHER SIMILAR WORK.
3. COORDINATE ALL UTILITY CONNECTION PRIOR TO EXECUTION OF THIS WORK.
4. REFER TO DOOR & OPENING SCHEDULE, SHEET A314, FOR ADDITIONAL INFORMATION.

KEY NOTES

1. FLOOR GRATE WITH MAXIMUM 1/4 INCH OPEN GAP.
2. FLOOR ACCESS HATCH, REFER TO STRUCTURAL DRAWINGS FOR ADDITIONAL INFORMATION.
3. SOLID CHECKER-PLATE FLOOR TRENCH COVER FLUSH WITH ADJACENT FLOORING
4. DUCT DROP SPACE.
5. EXTERIOR VERTICAL EXPANSION JOINT COVER. SEE DETAIL # 21/A316.
6. INTERIOR VERTICAL EXPANSION JOINT COVER. SEE DETAIL # 12/A316.
7. FLOOR EXPANSION JOINT COVER. SEE DETAIL # 23/A316.
8. 8 INCH WIDE CONCRETE MASONRY UNIT WALL. REFER TO EXTERIOR ELEVATION FOR COLOR / TEXTURE PATTERNS. REFER TO STRUCTURAL DRAWINGS FOR ADDITIONAL INFORMATION.
9. 12 INCH WIDE CONCRETE MASONRY UNIT WALL. REFER TO EXTERIOR ELEVATION FOR COLOR / TEXTURE PATTERNS. REFER TO STRUCTURAL DRAWINGS FOR ADDITIONAL INFORMATION.
10. 12 INCH WIDE PRECISION FACE CONCRETE MASONRY UNIT WALL. REFER TO STRUCTURAL DRAWINGS FOR ADDITIONAL INFORMATION.
11. ONE HOUR WALL CONSISTING OF 4 INCH WIDE METAL STUD FRAMING WITH 5/8 INCH THICK TYPE "X" GYPSUM WALLBOARD EACH SIDE.
12. ACOUSTIC INSULATION IN WALL CAVITY, FLOOR TO UNDERSIDE OF STRUCTURE ABOVE.
13. PREFABRICATED FLOOR DECK AND STAIR ASSEMBLY. REFER TO STRUCTURAL DRAWINGS FOR ADDITIONAL INFORMATION.
14. CONCRETE PEDESTAL FOR WATER PROCESS SYSTEM FACILITIES. REFER TO STRUCTURAL DRAWINGS FOR ADDITIONAL INFORMATION.
15. R-13 THERMAL INSULATION IN WALL CAVITY, FLOOR TO UNDERSIDE OF STRUCTURE ABOVE.
16. METAL STUD WALL FURRING WITH GYPSUM WALLBOARD FINISH.
17. 42" HIGH METAL GUARDRAIL, REFER TO STRUCTURAL DRAWINGS FOR ADDITIONAL INFORMATION.
18. NOT USED.
19. STRUCTURAL COLUMN, REFER TO STRUCTURAL DRAWINGS FOR ADDITIONAL INFORMATION.
20. ACCESS LADDER.
21. CATWALK ABOVE.
22. EXHAUST FAN UNIT. REFER TO MECHANICAL DRAWINGS FOR ADDITIONAL INFORMATION.
23. FIRE SPRINKLER RISER LOCATION.
24. SEMI-RECESSED FIRE EXTINGUISHER CABINET AND EXTINGUISHER.
25. FIRE EXTINGUISHER LOCATION. VERIFY EXACT LOCATION AND QUANTITY WITH FIRE AUTHORITY.

5 0 5 10 20 40

SCALE: 3/32" = 1'-0"

FILENAME: A302 Floor Plan.dwg
LAST UPDATED: 2/1/2012 10:54am
LAST SAVED BY: rcstensby

No.	DATE	REVISIONS	APPROVED

DESIGNED: RBF
DRAWN: rcs
CHECKED: wdg

RBF CONSULTING

carollo

IRVINE RANCH WATER DISTRICT

WILLIAM D. GRAEBER	CA LIC NO. C11052	ARCHITECT	DATE
CINDY MILLER	RCE NO. 58116	PROJECT MANAGER	DATE
PATRICIA UEMATSU	RCE NO. 36762	PRINCIPAL ENGINEER	DATE

STATE OF CALIFORNIA WILLIAM D. GRAEBER #C11052 EXPIRES 5/31/2013 REGISTERED ARCHITECT

IRVINE RANCH WATER DISTRICT
BAKER WATER TREATMENT PLANT
PROJECT NO. 11218

TREATMENT BUILDING
FIRST FLOOR PLAN & EXITING

DRAWING A302

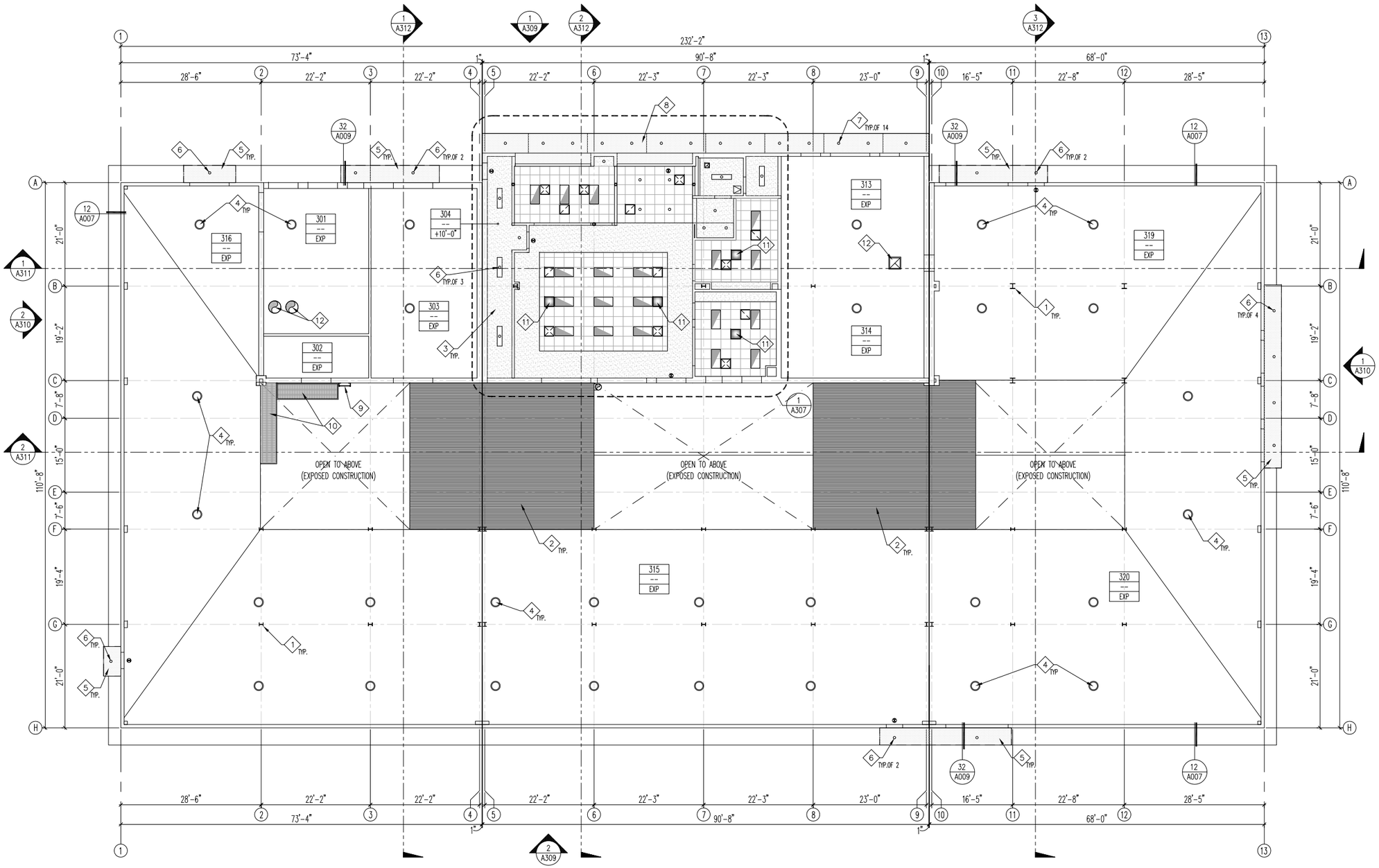

REFLECTED CEILING PLAN

SCALE: 3/32" = 1'-0"

SCALE: 3/32" = 1'-0"

NOTES

SOC WMA

1. REFER TO GENERAL ARCHITECTURAL NOTES FOR ADDITIONAL INFORMATION AND REQUIREMENTS.
2. WHERE NO CONSTRUCTION DETAILS ARE SHOWN OR NOTED FOR ANY PART OF THE WORK, DETAILS SHALL BE THE SAME AS FOR OTHER SIMILAR WORK.
3. COORDINATE ALL UTILITY CONNECTION PRIOR TO EXECUTION OF THIS WORK.

KEY NOTES

1. STRUCTURAL COLUMN, REFER TO STRUCTURAL DRAWINGS FOR ADDITIONAL INFORMATION.
2. STRUCTURAL DECKING, REFER TO STRUCTURAL DRAWINGS FOR ADDITIONAL INFORMATION.
3. SUSPENDED GYPSUM BOARD CEILING SYSTEM. REFER TO DETAILS # 32 AND 33/A009.
4. TUBULAR DAYLIGHT DEVICE AT OPEN CEILING. REFER TO DETAIL # 41/A010 FOR ADDITIONAL INFORMATION.
5. CANOPY. REFER TO DETAILS # 12 AND 13/A008 FOR ADDITIONAL INFORMATION.
6. LIGHT FIXTURE. REFER TO ELECTRICAL DRAWINGS FOR ADDITIONAL INFORMATION.
7. RECESSED LIGHT FIXTURE, REFER TO ELECTRICAL DRAWINGS.
8. EXTERIOR METAL SOFFIT PANELING AT ENTRY CANOPY.
9. ROOF ACCESS LADDER
10. UNDERSIDE OF ROOF ACCESS CATWALK.
11. TUBULAR DAYLIGHT DEVICE CEILING DIFFUSER. REFER TO DETAIL # 43/A010.
12. EXHAUST FAN DEVICE. REFER TO MECHANICAL DRAWINGS FOR ADDITIONAL INFORMATION.

FILENAME: A303 Reflected Ceiling Plan.dwg

LAST UPDATED: 2/1/2012 10:54am

LAST SAVED BY: rcstensby

No.	DATE	REVISIONS	APPROVED

DESIGNED: rcs

DRAWN: rcs

CHECKED: wdg

RBF CONSULTING

carollo

Integrated J — IRVINE RANCH WATER DISTRICT

WILLIAM D. GRAEBER	CA LIC NO. C11052	ARCHITECT	DATE
CINDY MILLER	RCE NO. 58116	PROJECT MANAGER	DATE
PATRICIA UEMATSU	RCE NO. 36762	PRINCIPAL ENGINEER	DATE

STATE OF CALIFORNIA — WILLIAM GRAEBER — #C11052 — EXPIRES 6/31/2013 — REGISTERED ARCHITECT

IRVINE RANCH WATER DISTRICT
BAKER WATER TREATMENT PLANT
PROJECT NO. 11218

TREATMENT BUILDING
REFLECTED CEILING PLAN

DRAWING A303

SHEET 138 OF 632

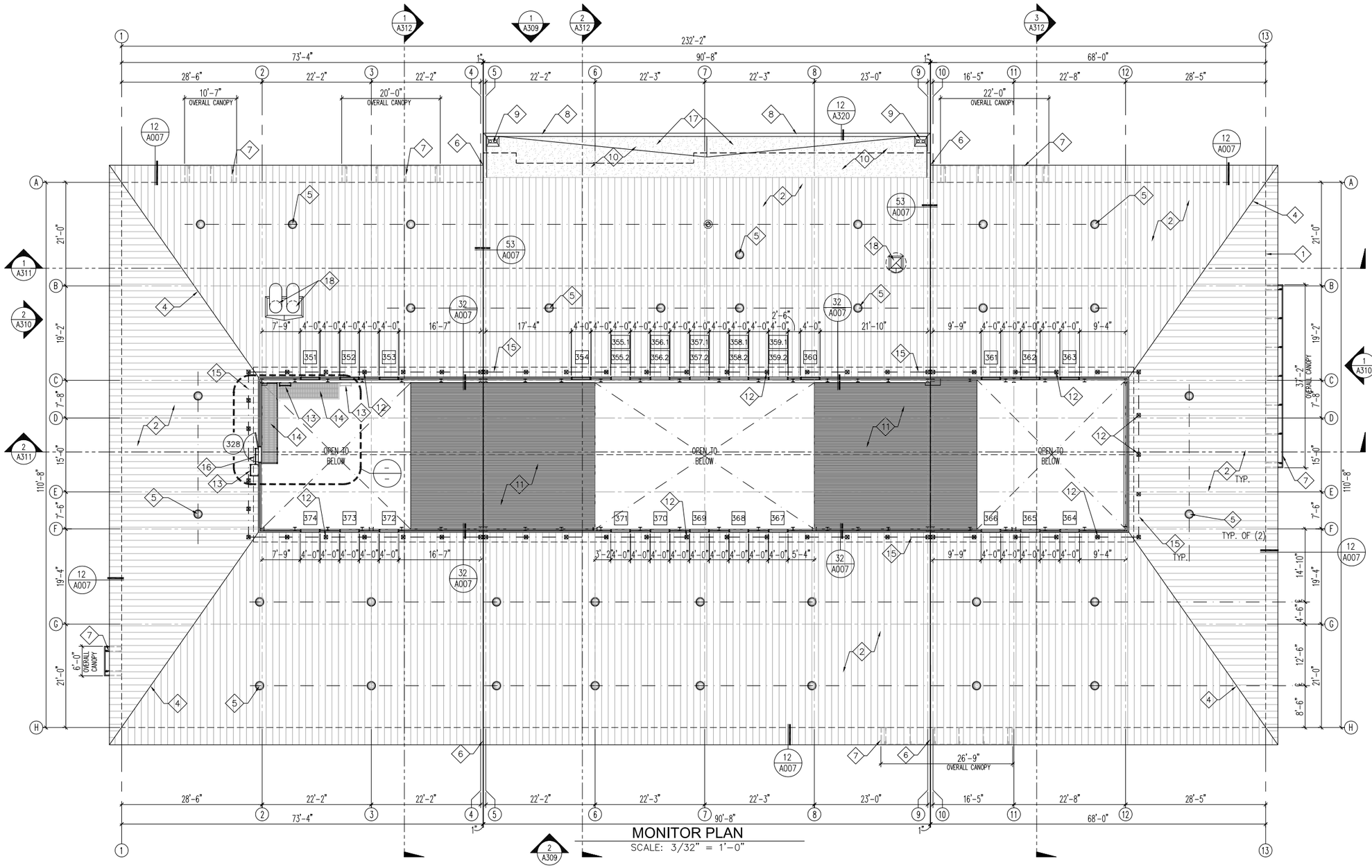

MONITOR PLAN

SCALE: 3/32" = 1'-0"

NOTES

1. REFER TO GENERAL ARCHITECTURAL NOTES FOR ADDITIONAL INFORMATION AND REQUIREMENTS.
2. WHERE NO CONSTRUCTION DETAILS ARE SHOWN OR NOTED FOR ANY PART OF THE WORK, DETAILS SHALL BE THE SAME AS FOR OTHER SIMILAR WORK.
3. COORDINATE ALL UTILITY CONNECTION PRIOR TO EXECUTION OF THIS WORK.

KEY NOTES

1. LINE OF BUILDING STRUCTURE BELOW.
2. STANDING SEAM METAL ROOFING OVER UNDERLAYMENT OVER OSB/POLYISOCYANURATE RIGID INSULATION OVER VAPOR BARRIER OVER STRUCTURAL ROOF DECK.
3. PREFINISHED SHEET METAL RIDGE CAP, MATCH STANDING SEAM METAL ROOF COLOR.
4. PREFINISHED SHEET METAL HIP CAP, MATCH STANDING SEAM METAL ROOF COLOR.
5. TUBULAR DAYLIGHT DEVICE AND ROOF FLASHING ASSEMBLY, CENTER ON STANDING SEAM OF METAL ROOFING SYSTEM. SEE DETAIL # 21 & 41/A010 FOR ADDITIONAL INFORMATION.
6. ROOF EXPANSION JOINT COVER, COLOR TO MATCH STANDING SEAM METAL ROOF COLOR. SEE DETAIL # 53/A007 FOR ADDITIONAL INFORMATION.
7. CANOPY BELOW. REFER TO DETAIL # 12/A009 FOR ADDITIONAL INFORMATION.
8. PREFINISHED SHEET METAL CANOPY WALL CAP TO MATCH CANOPY FACE PANEL COLOR.
9. ROOF DRAIN AND OVERFLOW.
10. BUILT-UP ROOFING OVER UNDERLAYMENT OVER TAPERED OSB /POLYISOCYANURATE RIGID INSULATION OVER VAPOR BARRIER OVER STRUCTURAL STEEL DECKING. SLOPE TO ROOF/OVERFLOW DRAINS.
11. STRUCTURAL STEEL DECKING. REFER TO STRUCTURAL DRAWINGS FOR ADDITIONAL INFORMATION.
12. ROOF TOP MOUNTED ANCHORAGE POST FOR SAFETY LINE.
13. ROOF ACCESS LADDER.
14. ROOF ACCESS CATWALK.
15. SAFETY LINE CABLE.
16. ACCESS LADDER WITH EXTEND SIDE SAFETY STILE RAIL.
17. CRICKET.
18. EXHAUST FAN. REFER TO MECHANICAL DRAWINGS FOR ADDITIONAL INFORMATION.

FILENAME: A304 Monitor Plan.dwg
LAST UPDATED: 2/1/2012 10:55am
LAST SAVED BY: rstensby

No.	DATE	REVISIONS	APPROVED

DESIGNED: rcs
DRAWN: rcs
CHECKED: wdg

RBF CONSULTING

carollo

IRVINE RANCH WATER DISTRICT

WILLIAM D. GRAEBER	CA LIC NO. C11052	ARCHITECT	DATE
CINDY MILLER	RCE NO. 58116	PROJECT MANAGER	DATE
PATRICIA UEMATSU	RCE NO. 36762	PRINCIPAL ENGINEER	DATE

STATE OF CALIFORNIA WILLIAM D. GRAEBER #C11052 EXPIRES 5/31/2013 REGISTERED ARCHITECT

IRVINE RANCH WATER DISTRICT
BAKER WATER TREATMENT PLANT
PROJECT NO. 11218

TREATMENT BUILDING
MONITOR PLAN

DRAWING A304

SHEET 139 OF 632

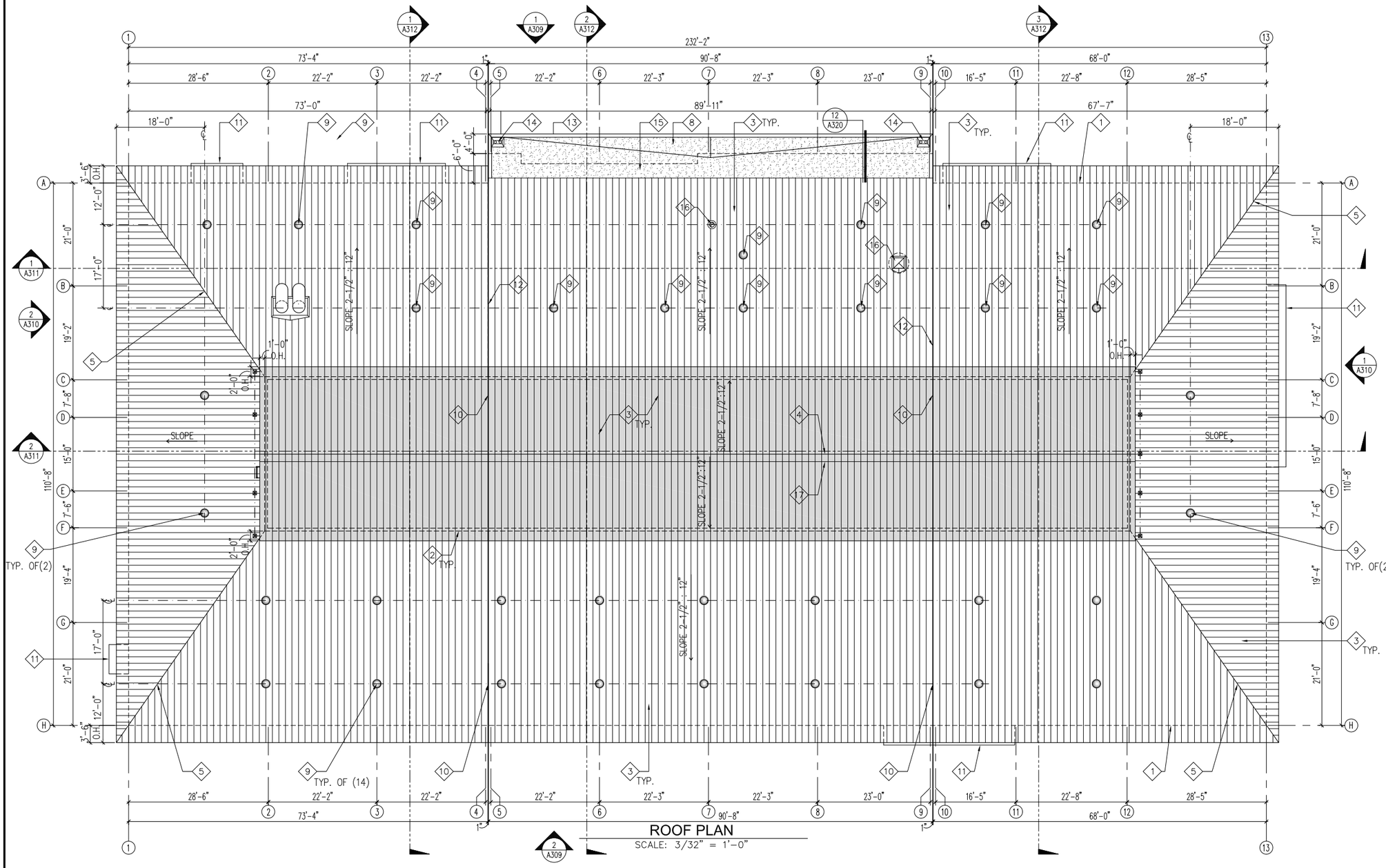

ROOF PLAN

SCALE: 3/32" = 1'-0"

NOTES

1. REFER TO GENERAL ARCHITECTURAL NOTES FOR ADDITIONAL INFORMATION AND REQUIREMENTS.
2. WHERE NO CONSTRUCTION DETAILS ARE SHOWN OR NOTED FOR ANY PART OF THE WORK, DETAILS SHALL BE THE SAME AS FOR OTHER SIMILAR WORK.
3. COORDINATE ALL UTILITY CONNECTION PRIOR TO EXECUTION OF THIS WORK.

KEY NOTES

1. LINE OF BUILDING STRUCTURE BELOW.
2. LINE OF MONITOR WALL BELOW.
3. STANDING SEAM METAL ROOFING OVER UNDERLAYMENT OVER OSB/POLYISOCYANURATE RIGID INSULATION OVER VAPOR BARRIER OVER STRUCTURAL ROOF DECK.
4. PRE-FINISHED SHEET METAL RIDGE CAP, MATCH STANDING SEAM METAL ROOF COLOR.
5. PRE-FINISHED SHEET METAL HIP CAP, MATCH STANDING SEAM METAL ROOF COLOR.
6. PRE-FINISHED SHEET METAL GUTTER AND DOWNSPOUT, MATCH STANDING SEAM METAL ROOF COLOR.
7. ROOFTOP EQUIPMENT PLATFORM. PAINT TO MATCH ADJACENT STANDING SEAM METAL ROOFING COLOR.
8. CRICKET.
9. TUBULAR DAYLIGHT DEVICE AND ROOF FLASHING ASSEMBLY, CENTER ON STANDING SEAM OF METAL ROOFING SYSTEM. SEE DETAIL # 21/A010 FOR ADDITIONAL INFORMATION.
10. ROOF EXPANSION JOINT COVER, COLOR TO MATCH STANDING SEAM METAL ROOF COLOR. SEE DETAIL # 53/A007 FOR ADDITIONAL INFORMATION.
11. CANOPY BELOW. REFER TO EXTERIOR ELEVATIONS FOR LENGTH. REFER TO DETAIL # 12/A009 & 13/A009 FOR ADDITIONAL INFORMATION.
12. ROOF TO WALL EXPANSION JOINT COVER, PAINT TO MATCH STANDING SEAM ROOF COLOR. SEE DETAIL FOR ADDITIONAL INFORMATION.
13. PRE-FINISHED SHEET METAL CANOPY WALL CAP TO MATCH CANOPY FACE PANEL COLOR.
14. ROOF DRAIN AND OVERFLOW.
15. BUILT-UP ROOFING OVER UNDERLAYMENT OVER TAPERED OSB /POLYISOCYANURATE RIGID INSULATION OVER VAPOR BARRIER OVER STRUCTURAL STEEL DECKING. SLOPE TO ROOF/OVERFLOW DRAINS.
16. EXHAUST FAN DEVICE. REFER TO MECHANICAL DRAWINGS FOR ADDITIONAL INFORMATION.
17. HORIZONTAL RIDGE FALL ARREST TRACK.

FILENAME: A305 Roof Plan.dwg

LAST UPDATED: 2/1/2012 10:55am

LAST SAVED BY: rstensby

No.	DATE	REVISIONS	APPROVED

DESIGNED: rcs
DRAWN: rcs
CHECKED: wdg

RBF CONSULTING

carollo

IRVINE RANCH WATER DISTRICT

WILLIAM D. GRAEBER	CA LIC NO. C11052	ARCHITECT	DATE
CINDY MILLER	RCE NO. 58116	PROJECT MANAGER	DATE
PATRICIA UEMATSU	RCE NO. 36762	PRINCIPAL ENGINEER	DATE

STATE OF CALIFORNIA WILLIAM D. GRAEBER #C11052 EXPIRES 5/31/2013 REGISTERED ARCHITECT

IRVINE RANCH WATER DISTRICT
BAKER WATER TREATMENT PLANT
PROJECT NO. 11218

TREATMENT BUILDING
ROOF PLAN

DRAWING A305

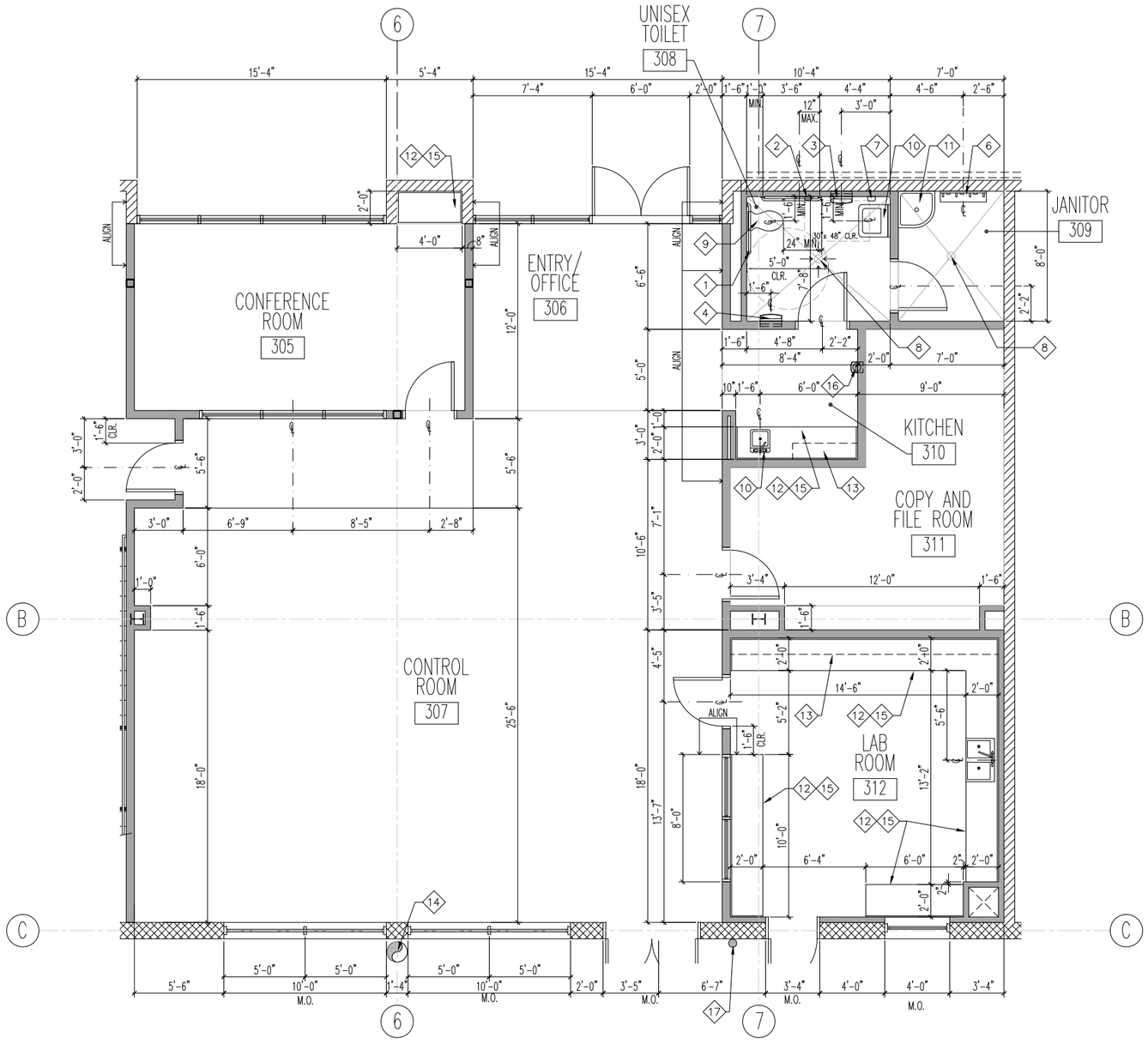

ENLARGED FIRST FLOOR PLAN (1 / A302)

SCALE: 1/4" = 1'-0"

NOTES

1. REFER TO GENERAL ARCHITECTURAL NOTES FOR ADDITIONAL INFORMATION AND REQUIREMENTS.
2. WHERE NO CONSTRUCTION DETAILS ARE SHOWN OR NOTED FOR ANY PART OF THE WORK, DETAILS SHALL BE THE SAME AS FOR OTHER SIMILAR WORK.
3. COORDINATE ALL UTILITY CONNECTION PRIOR TO EXECUTION OF THIS WORK.

KEY NOTES

1. 1½" DIAMETER STAINLESS STEEL GRAB BAR. REFER TO DETAIL 22/A003.
2. RECESSED SEAT-COVER, SANITARY NAPKIN DISPOSAL & TOILET TISSUE DISPENSER.
3. RECESSED PAPER TOWEL DISPENSER.
4. RECESSED WASTE RECEPTACLE.
5. STAINLESS STEEL FRAME MIRROR.
6. UTILITY SHELF W/ MOP/BROOM HOLDER & RAG HOOKS.
7. RECESSED SOAP DISPENSER.
8. FLOOR DRAINAGE. REFER TO PLUMBING PLANS FOR ADDITIONAL INFORMATION.
9. WATER CLOSET. REFER TO PLUMBING PLANS FOR ADDITIONAL INFORMATION.
10. LAVATORY. REFER TO PLUMBING PLANS FOR ADDITIONAL INFORMATION.
11. SERVICE SINK. REFER TO PLUMBING PLANS FOR ADDITIONAL INFORMATION.
12. 24" DEEP BASE CABINET W/ADJUSTABLE SHELVING. REFER TO DETAIL 12/A010.
13. 12" DEEP UPPER CABINETRY W/ADJUSTABLE SHELVING. REFER TO DETAIL 11A010.
14. EXHAUST DUCTWORK. REFER TO MECHANICAL DRAWINGS FOR ADDITIONAL INFORMATION.
15. PLASTIC LAMINATE COUNTERTOP.
16. SEMI-RECESSED FIRE EXTINGUISHER CABINET AND EXTINGUISHER.
17. FIRE EXTINGUISHER LOCATION. VERIFY EXACT LOCATION AND QUANTITY WITH FIRE AUTHORITY.

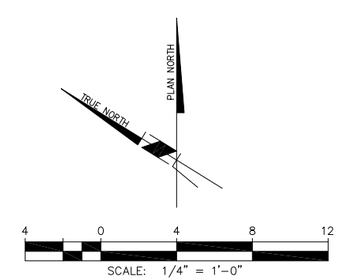

LAST SAVED BY: mshutaff LAST UPDATED: 2/1/2012 10:55am FILENAME: A306 Enlarged Plan.dwg

No.	DATE	REVISIONS	APPROVED

DESIGNED: RBF
DRAWN: msh
CHECKED: wdg

RBF CONSULTING

carollo

IRVINE RANCH WATER DISTRICT

WILLIAM D. GRAEBER	CA LIC NO. C11052	ARCHITECT	DATE
CINDY MILLER	RCE NO. 58116	PROJECT MANAGER	DATE
PATRICIA UEMATSU	RCE NO. 36762	PRINCIPAL ENGINEER	DATE

STATE OF CALIFORNIA WILLIAM D. GRAEBER #C11052 EXPIRES 5/31/2013 REGISTERED ARCHITECT

IRVINE RANCH WATER DISTRICT
BAKER WATER TREATMENT PLANT
PROJECT NO. 11218

TREATMENT BUILDING
ENLARGED PLAN

DRAWING A306

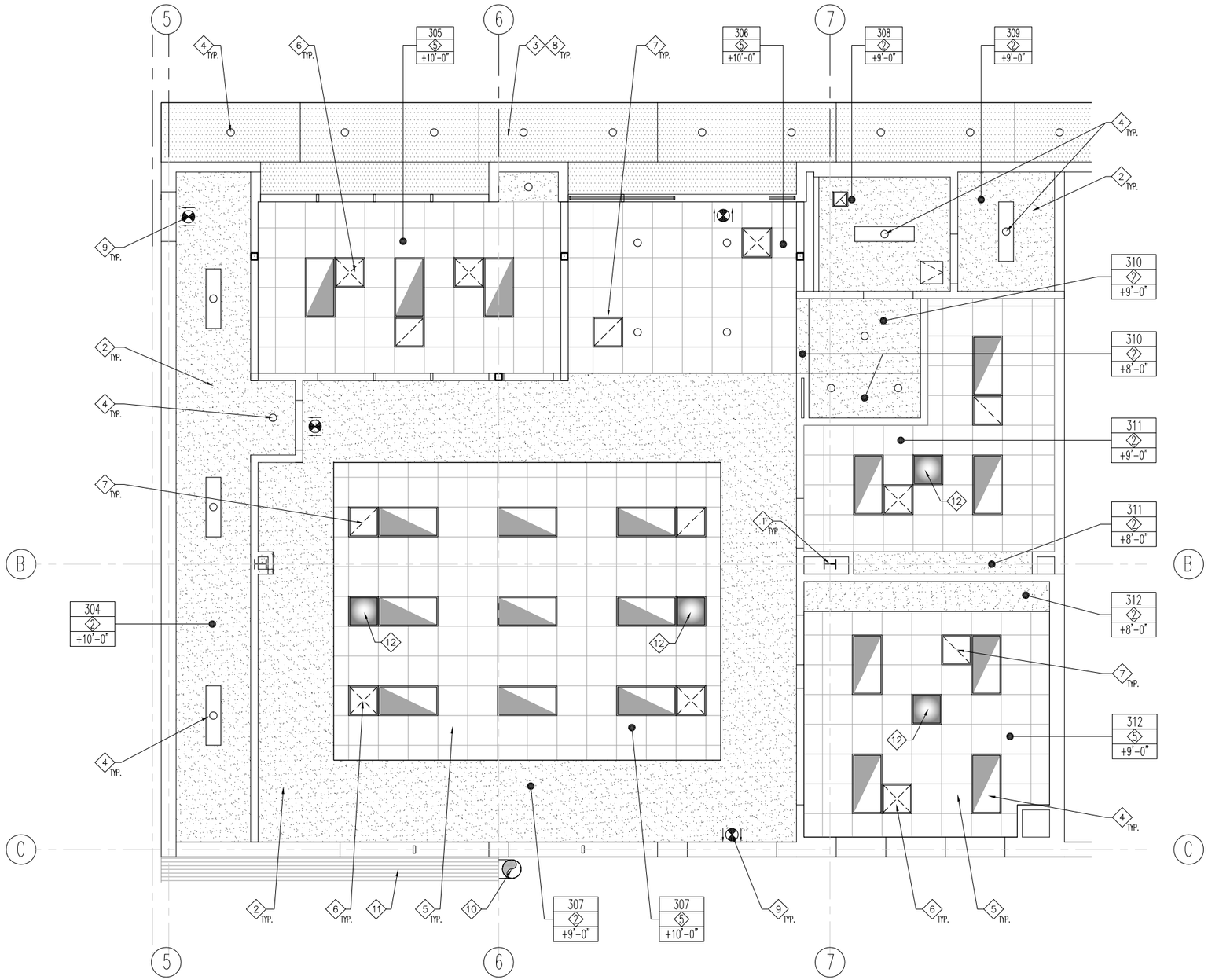

ENLARGED REFLECTED CEILING PLAN (1 / A303)

SCALE: 1/4" = 1'-0"

NOTES

1. REFER TO GENERAL ARCHITECTURAL NOTES FOR ADDITIONAL INFORMATION AND REQUIREMENTS.
2. WHERE NO CONSTRUCTION DETAILS ARE SHOWN OR NOTED FOR ANY PART OF THE WORK, DETAILS SHALL BE THE SAME AS FOR OTHER SIMILAR WORK.
3. COORDINATE ALL UTILITY CONNECTION PRIOR TO EXECUTION OF THIS WORK.

KEY NOTES

1. STRUCTURAL COLUMN, REFER TO STRUCTURAL DRAWINGS FOR ADDITIONAL INFORMATION.
2. SUSPENDED GYPSUM BOARD CEILING SYSTEM. REFER TO DETAILS 32 AND 33/A009.
3. CANOPY. REFER TO DETAIL # 12/A320 FOR ADDITIONAL INFORMATION.
4. LIGHT FIXTURE. REFER TO ELECTRICAL DRAWINGS FOR ADDITIONAL INFORMATION.
5. SUSPENDED 2' x 2' T-BAR CEILING SYSTEM.
6. MECHANICAL SUPPLY REGISTER. REFER TO MECHANICAL DRAWINGS FOR ADDITIONAL INFORMATION.
7. MECHANICAL RETURN REGISTER. REFER TO MECHANICAL DRAWINGS FOR ADDITIONAL INFORMATION.
8. PRE-FINISHED METAL CANOPY.
9. ILLUMINATED EXIT SIGN WITH BACK-UP BATTERY.
10. EXHAUST DUCTWORK. REFER TO MECHANICAL DRAWINGS FOR ADDITIONAL INFORMATION.
11. STRUCTURAL DECKING. REFER TO STRUCTURAL DRAWINGS FOR ADDITIONAL INFORMATION.
12. TUBULAR DAYLIGHT DEVICE CEILING DIFFUSER. REFER TO DETAIL # 42/A010 & 43/A010.

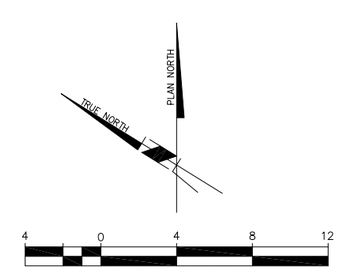

LAST SAVED BY: rstensby LAST UPDATED: 2/1/2012 10:55am FILENAME: A307 Enlarged RCP.dwg

No.	DATE	REVISIONS	APPROVED

DESIGNED: rcs
DRAWN: rcs
CHECKED: wdg

RBF CONSULTING

carollo

IRVINE RANCH WATER DISTRICT

WILLIAM D. GRAEBER CA LIC NO. C11052 ARCHITECT DATE
CINDY MILLER RCE NO. 58116 PROJECT MANAGER DATE
PATRICIA UEMATSU RCE NO. 36762 PRINCIPAL ENGINEER DATE

STATE OF CALIFORNIA WILLIAM GRAEBER #C11052 EXPIRES 6/30/2013 REGISTERED ARCHITECT

IRVINE RANCH WATER DISTRICT
BAKER WATER TREATMENT PLANT
PROJECT NO. 11218

TREATMENT BUILDING
ENLARGED REFLECTED CEILING PLAN

DRAWING A307

SOC WMA

NOTES

1. REFER TO GENERAL ARCHITECTURAL NOTES FOR ADDITIONAL INFORMATION AND REQUIREMENTS.
2. WHERE NO CONSTRUCTION DETAILS ARE SHOWN OR NOTED FOR ANY PART OF THE WORK, DETAILS SHALL BE THE SAME AS FOR OTHER SIMILAR WORK.
3. COORDINATE ALL UTILITY CONNECTION PRIOR TO EXECUTION OF THIS WORK.

KEY NOTES

1. FIBERGLASS STAIR ASSEMBLY. REFER TO STRUCTURAL DRAWINGS FOR ADDITIONAL INFORMATION.
2. CAST-IN-PLACE CONCRETE STAIR. REFER TO STRUCTURAL DRAWINGS FOR ADDITIONAL INFORMATION.
3. CAST-IN-PLACE CONCRETE WALL. REFER TO STRUCTURAL DRAWINGS FOR ADDITIONAL INFORMATION.
4. 2" WIDE WARNING STRIPPING AT TOP/BOTTOM STAIR AT 1" FROM EDGE OF NOSING.
5. 34" HIGH HANDRAIL.
6. 42" HIGH METAL GUARDRAIL, REFER TO STRUCTURAL DRAWINGS FOR ADDITIONAL INFORMATION.
7. FLOOR GRATE WITH MAXIMUM 1/4 INCH OPEN GAP
8. SEALED CONCRETE FLOOR SLAB, REFER TO STRUCTURAL DRAWINGS FOR ADDITIONAL INFORMATION.
9. CONCRETE FOUNDATION SYSTEM, REFER TO STRUCTURAL DRAWINGS FOR ADDITIONAL INFORMATION.
10. STRUCTURAL COLUMN, REFER TO STRUCTURAL DRAWINGS FOR ADDITIONAL INFORMATION.
11. STRUCTURAL MEMBER, REFER TO STRUCTURAL DRAWINGS FOR ADDITIONAL INFORMATION.

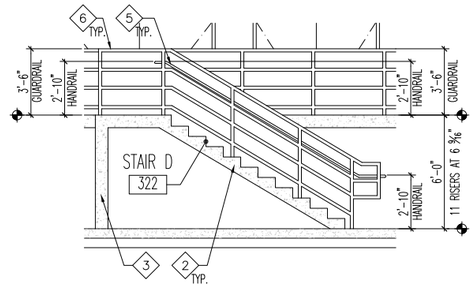

ENLARGED SECTION - STAIR D # 322 (9/A302)
SCALE: 1/4" = 1'-0"

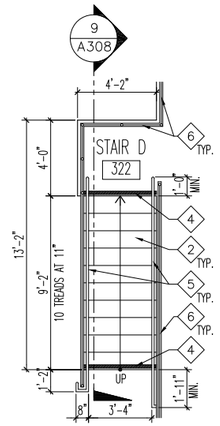

ENLARGED PLAN
STAIR D # 322 (8/A302)
SCALE: 1/4" = 1'-0"

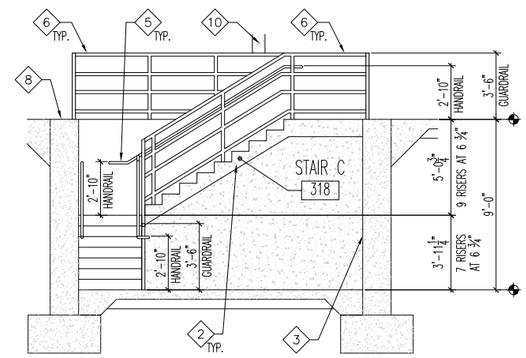

ENLARGED SECTION - STAIR C # 318 (5/A302)
SCALE: 1/4" = 1'-0"

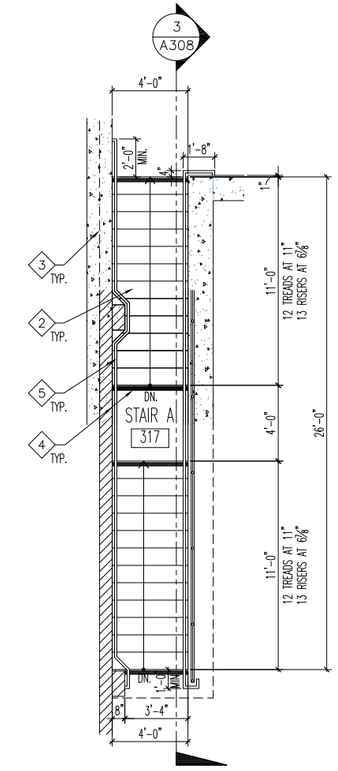

ENLARGED PLAN
STAIR A # 317 (1/A302)
SCALE: 1/4" = 1'-0"

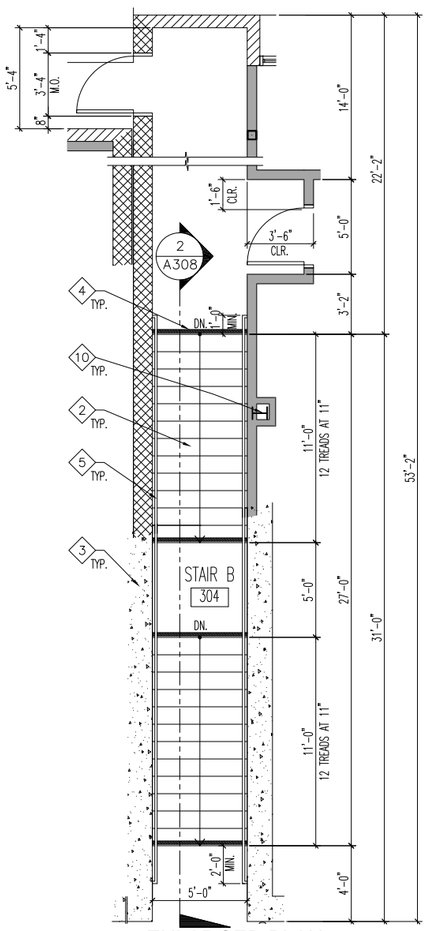

ENLARGED PLAN
STAIR B # 304 (7/A302)
SCALE: 1/4" = 1'-0"

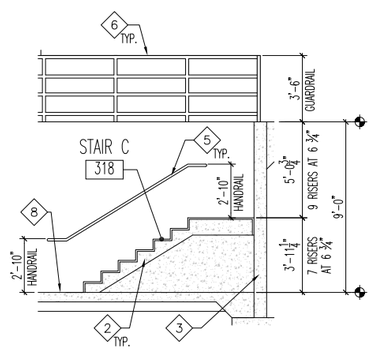

ENLARGED SECTION - STAIR C # 318 (6/A302)
SCALE: 1/4" = 1'-0"

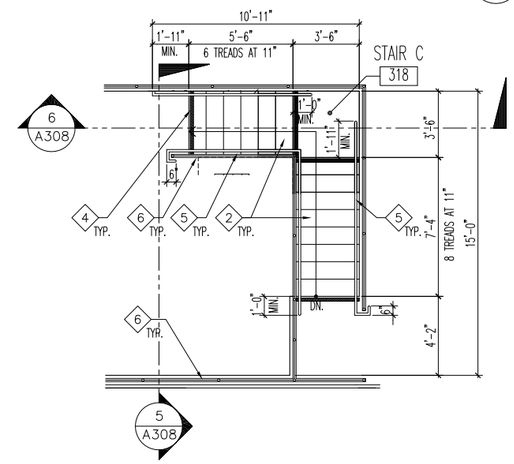

ENLARGED PLAN - STAIR C # 318 (4/A302)
SCALE: 1/4" = 1'-0"

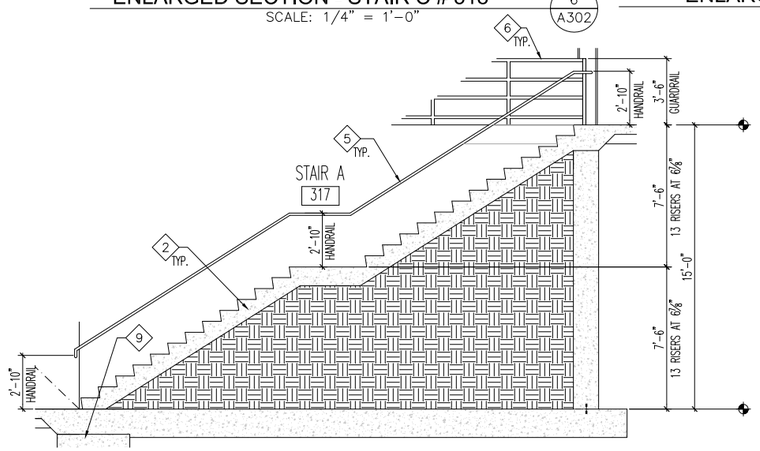

ENLARGED SECTION - STAIR A # 317 (3/A304)
SCALE: 1/4" = 1'-0"

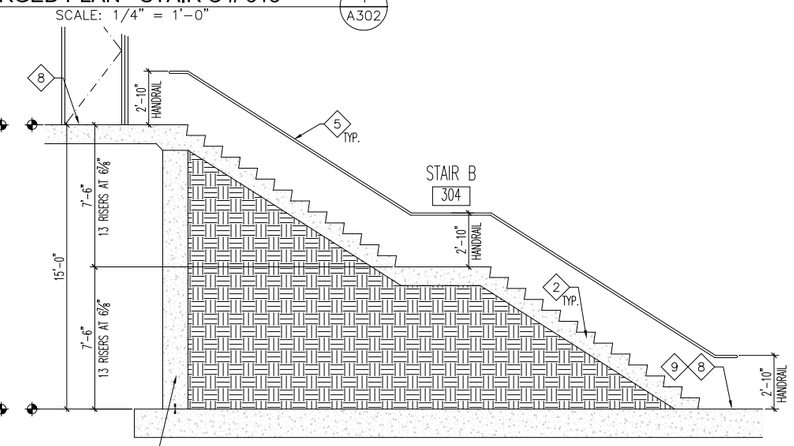

ENLARGED SECTION - STAIR B # 304 (2/3/A304)
SCALE: 1/4" = 1'-0"

4 0 4 8 12
SCALE: 1/4" = 1'-0"

LAST SAVED BY: rcstensby LAST UPDATED: 2/1/2012 10:55am FILENAME: A308 Enlarged Stair Plans + Sections.dwg

No.	DATE	REVISIONS	APPROVED

DESIGNED: RBF
DRAWN: rcs
CHECKED: wdg

RBF CONSULTING

carollo

IRVINE RANCH WATER DISTRICT

WILLIAM D. GRAEBER CA LIC NO. C11052 ARCHITECT DATE
CINDY MILLER RCE NO. 58116 PROJECT MANAGER DATE
PATRICIA UEMATSU RCE NO. 36762 PRINCIPAL ENGINEER DATE

STATE OF CALIFORNIA WILLIAM D. GRAEBER #C11052 EXPIRES 5/31/2013 REGISTERED ARCHITECT

IRVINE RANCH WATER DISTRICT
BAKER WATER TREATMENT PLANT
PROJECT NO. 11218

TREATMENT BUILDING
ENLARGED STAIR PLANS & SECTIONS

DRAWING A308

NOTES

1. REFER TO GENERAL ARCHITECTURAL NOTES FOR ADDITIONAL INFORMATION AND REQUIREMENTS.
2. WHERE NO CONSTRUCTION DETAILS ARE SHOWN OR NOTED FOR ANY PART OF THE WORK, DETAILS SHALL BE THE SAME AS FOR OTHER SIMILAR WORK.
3. COORDINATE ALL UTILITY CONNECTION PRIOR TO EXECUTION OF THIS WORK.

KEY NOTES

1. CONCRETE MASONRY UNIT WALL. REFER TO DETAIL 3/A309 FOR COLOR / TEXTURE PATTERNS. REFER TO STRUCTURAL DRAWINGS FOR ADDITIONAL INFORMATION.
2. STANDING SEAM METAL ROOFING OVER UNDERLAYMENT OVER OSB/POLYISOCYANURATE RIGID INSULATION OVER VAPOR BARRIER OVER STRUCTURAL ROOF DECK.
3. PREFINISHED SHEET METAL RIDGE CAP, MATCH STANDING SEAM METAL ROOF COLOR.
4. PRE-FINISHED SHEET METAL HIP CAP, MATCH STANDING SEAM METAL ROOF COLOR.
5. METAL CANOPY. REFER TO DETAILS 12, AND 13/A008 FOR ADDITIONAL INFORMATION.
6. PRE-FINISHED METAL WALL PANEL ASSEMBLY. SEE DETAIL # 11/A008 FOR ADDITIONAL INFORMATION.
7. TUBULAR DAYLIGHT DEVICE AND ROOF FLASHING ASSEMBLY, CENTER ON STANDING SEAM OF METAL ROOFING SYSTEM.
8. ROOF EXPANSION JOINT COVER, COLOR TO MATCH STANDING SEAM METAL ROOF COLOR. SEE DETAIL # 53/A007 FOR ADDITIONAL INFORMATION.
9. ROOFTOP MOUNTED SAFETY LINE TIE-OFF POST.
10. ROOF ACCESS LADDER.
11. WALL LOUVER. REFER TO MECHANICAL DRAWINGS FOR ADDITIONAL INFORMATION.
12. GLAZING. REFER TO OPENING SCHEDULE FOR ADDITIONAL INFORMATION.
13. EXTERIOR BUILDING SIGNAGE. PIN-MOUNTED ALUMINUM LETTERING. SIZE, FONT AND SPECIFIC TEXT TO BE DETERMINED BY OWNER.
14. METAL CANOPY PANEL ASSEMBLY. SEE DETAIL # 32 & 33/A009 FOR ADDITIONAL INFORMATION.
15. EXHAUST FAN. REFER TO MECHANICAL DRAWINGS FOR ADDITIONAL INFORMATION.
16. ROOF ACCESS DOOR.
17. GOOSE NECK VENTS. REFER TO MECHANICAL DRAWINGS FOR ADDITIONAL INFORMATION.
18. MAKE UP AIR DUCT FAN. REFER TO MECHANICAL DRAWINGS FOR ADDITIONAL INFORMATION.
19. HORIZONTAL RIDGE FALL ARREST TRACK.

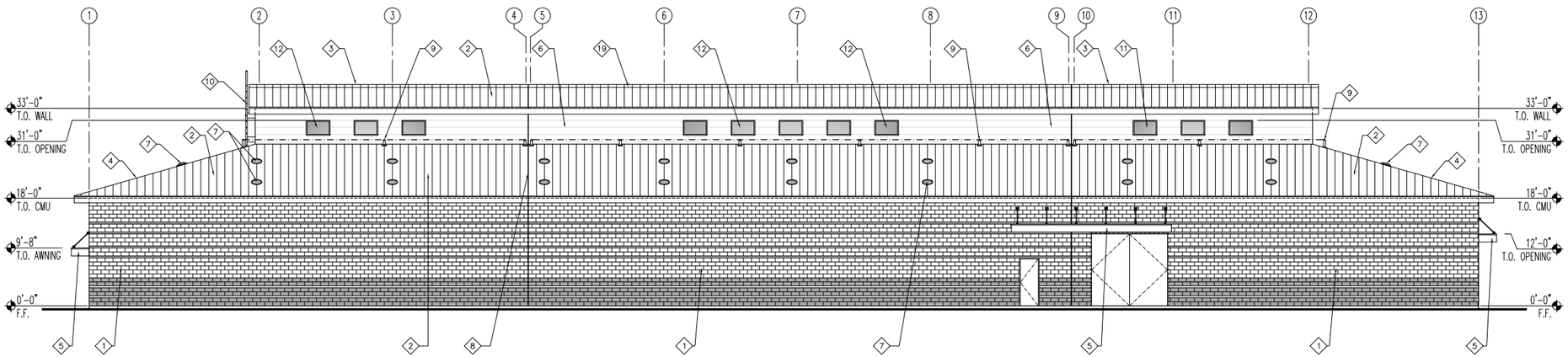

SOUTH EXTERIOR ELEVATION (2 / A302)
SCALE: 3/32" = 1'-0"

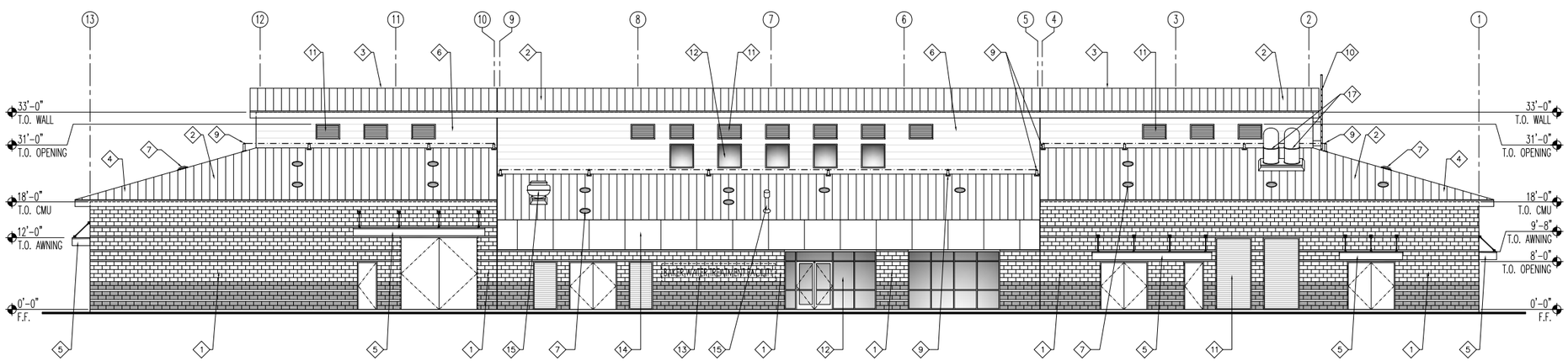

NORTH EXTERIOR ELEVATION (1 / A302)
SCALE: 3/32" = 1'-0"

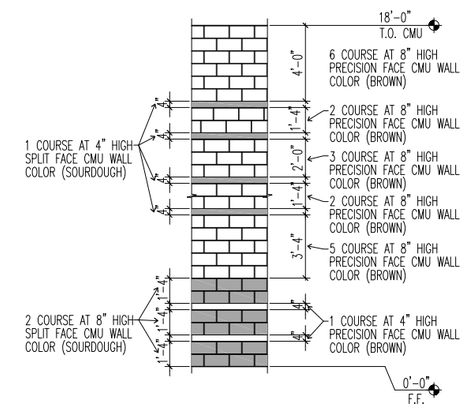

CMU WALL PATTERN (3 / A309)
SCALE: 1/4" = 1'-0"

5 0 5 10 20 40
SCALE: 3/32" = 1'-0"

FILENAME: A309 Exterior Elevations I.dwg
LAST UPDATED: 2/1/2012 10:56am
LAST SAVED BY: rcstensby

No.	DATE	REVISIONS	APPROVED

DESIGNED: rcs
DRAWN: rcs
CHECKED: wdg

RBF CONSULTING

carollo

IRVINE RANCH WATER DISTRICT

WILLIAM D. GRAEBER CA LIC NO. C11052 ARCHITECT DATE
CINDY MILLER RCE NO. 58116 PROJECT MANAGER DATE
PATRICIA UEMATSU RCE NO. 36762 PRINCIPAL ENGINEER DATE

STATE OF CALIFORNIA WILLIAM DAVID GRAEBER #C11052 EXPIRES 5/31/2013 REGISTERED ARCHITECT

IRVINE RANCH WATER DISTRICT
BAKER WATER TREATMENT PLANT
PROJECT NO. 11218

TREATMENT BUILDING
EXTERIOR ELEVATIONS I

DRAWING
A309
SHEET
144 OF 632

NOTES

1. REFER TO GENERAL ARCHITECTURAL NOTES FOR ADDITIONAL INFORMATION AND REQUIREMENTS.
2. WHERE NO CONSTRUCTION DETAILS ARE SHOWN OR NOTED FOR ANY PART OF THE WORK, DETAILS SHALL BE THE SAME AS FOR OTHER SIMILAR WORK.
3. COORDINATE ALL UTILITY CONNECTION PRIOR TO EXECUTION OF THIS WORK.

KEY NOTES

1. CONCRETE MASONRY UNIT WALL. REFER TO DETAIL 3/A309 FOR COLOR / TEXTURE PATTERNS. REFER TO STRUCTURAL DRAWINGS FOR ADDITIONAL INFORMATION.
2. STANDING SEAM METAL ROOFING OVER UNDERLAYMENT OVER OSB/POLYISOCYANURATE RIGID INSULATION OVER VAPOR BARRIER OVER STRUCTURAL ROOF DECK.
3. PREFINISHED SHEET METAL RIDGE CAP, MATCH STANDING SEAM METAL ROOF COLOR.
4. PRE-FINISHED SHEET METAL HIP CAP, MATCH STANDING SEAM METAL ROOF COLOR.
5. METAL CANOPY. REFER TO DETAILS 12, AND 13/A008 FOR ADDITIONAL INFORMATION.
6. PRE-FINISHED METAL WALL PANEL ASSEMBLY. SEE DETAIL # 11/A008 FOR ADDITIONAL INFORMATION.
7. TUBULAR DAYLIGHT DEVICE AND ROOF FLASHING ASSEMBLY, CENTER ON STANDING SEAM OF METAL ROOFING SYSTEM.
8. ROOF EXPANSION JOINT COVER, COLOR TO MATCH STANDING SEAM METAL ROOF COLOR. SEE DETAIL # 53/A007 FOR ADDITIONAL INFORMATION.
9. ROOFTOP MOUNTED SAFETY LINE TIE-OFF POST.
10. ROOF ACCESS LADDER.
11. WALL LOUVER. REFER TO MECHANICAL DRAWINGS FOR ADDITIONAL INFORMATION.
12. GLAZING. REFER TO OPENING SCHEDULE FOR ADDITIONAL INFORMATION.
13. EXTERIOR BUILDING SIGNAGE. PIN-MOUNTED ALUMINUM LETTERING. SIZE, FONT AND SPECIFIC TEXT TO BE DETERMINED BY OWNER.
14. METAL CANOPY PANEL ASSEMBLY. SEE DETAIL # 32 & 33/A009 FOR ADDITIONAL INFORMATION.
15. EXHAUST FAN. REFER TO MECHANICAL DRAWINGS FOR ADDITIONAL INFORMATION.
16. ROOF ACCESS DOOR.
17. GOOSE NECK VENTS. REFER TO MECHANICAL DRAWINGS FOR ADDITIONAL INFORMATION.
18. MAKE UP AIR DUCT FAN. REFER TO MECHANICAL DRAWINGS FOR ADDITIONAL INFORMATION.

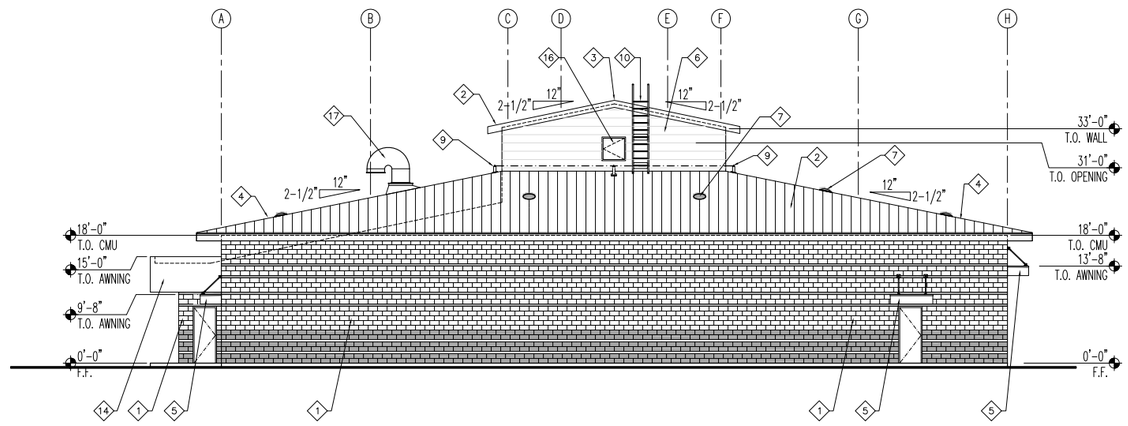

WEST EXTERIOR ELEVATION (2 / A302)
SCALE: 3/32" = 1'-0"

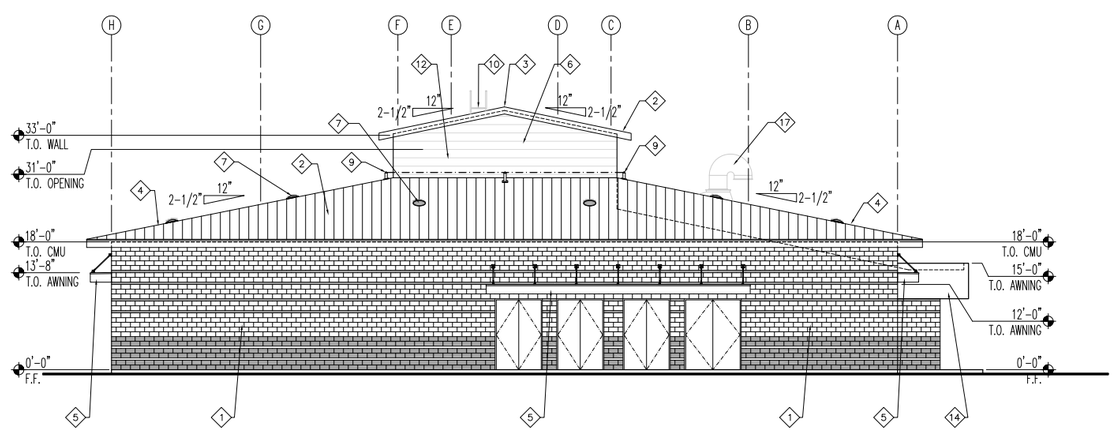

EAST EXTERIOR ELEVATION (1 / A302)
SCALE: 3/32" = 1'-0"

5 0 5 10 20 40
SCALE: 3/32" = 1'-0"

FILENAME: A310 Exterior Elevations II.dwg
LAST UPDATED: 2/1/2012 10:56am
LAST SAVED BY: rcstensby

No.	DATE	REVISIONS	APPROVED

DESIGNED: RBF
DRAWN: rcs
CHECKED: wdg

RBF CONSULTING

carollo

IRVINE RANCH WATER DISTRICT

WILLIAM D. GRAEBER	CA LIC NO. C11052	ARCHITECT	DATE
CINDY MILLER	RCE NO. 58116	PROJECT MANAGER	DATE
PATRICIA UEMATSU	RCE NO. 36762	PRINCIPAL ENGINEER	DATE

STATE OF CALIFORNIA WILLIAM D. GRAEBER #C11052 EXPIRES 5/31/2013 REGISTERED ARCHITECT

IRVINE RANCH WATER DISTRICT
BAKER WATER TREATMENT PLANT
PROJECT NO. 11218

TREATMENT BUILDING
EXTERIOR ELEVATIONS II

DRAWING A310
SHEET 145 OF 632

SOC WMA

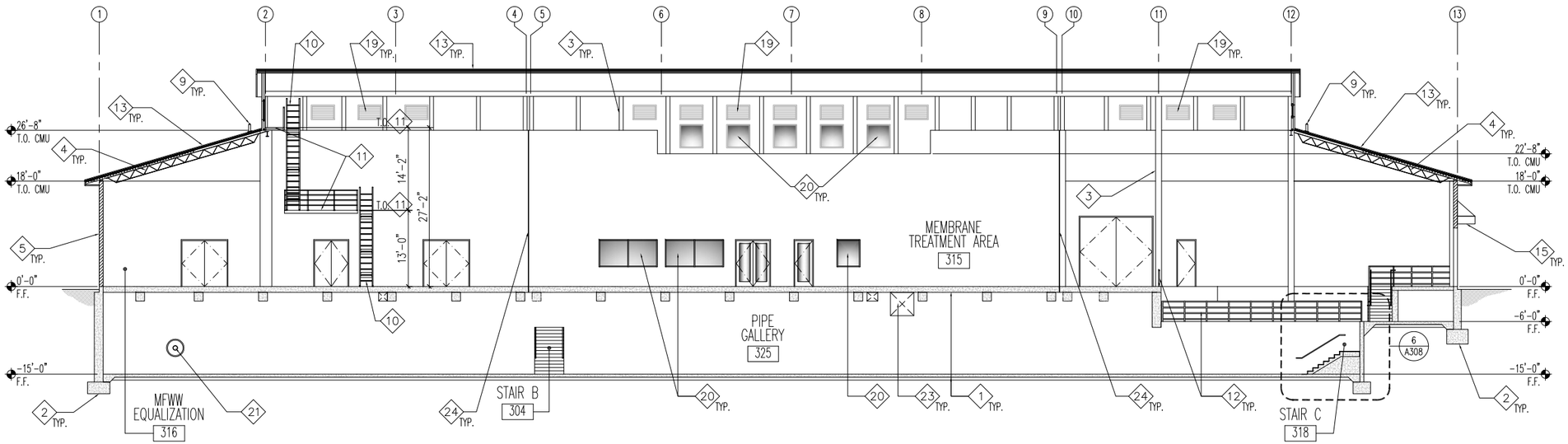

BUILDING SECTION (2 / A302)
SCALE: 3/32" = 1'-0"

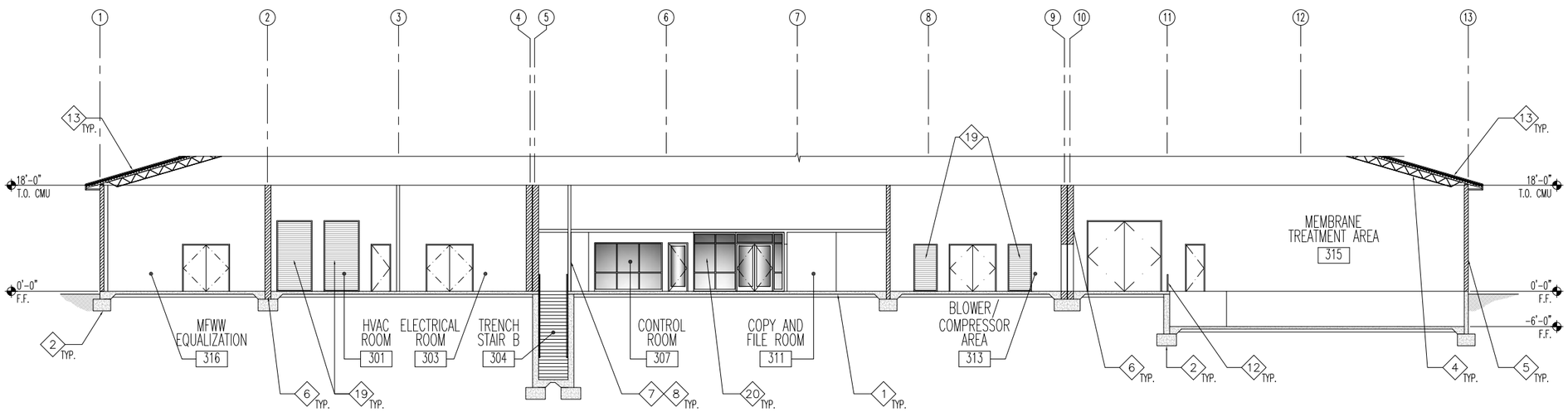

BUILDING SECTION (1 / A302)
SCALE: 3/32" = 1'-0"

NOTES

1. REFER TO GENERAL ARCHITECTURAL NOTES FOR ADDITIONAL INFORMATION AND REQUIREMENTS.
2. WHERE NO CONSTRUCTION DETAILS ARE SHOWN OR NOTED FOR ANY PART OF THE WORK, DETAILS SHALL BE THE SAME AS FOR OTHER SIMILAR WORK.
3. COORDINATE ALL UTILITY CONNECTION PRIOR TO EXECUTION OF THIS WORK.

KEY NOTES

1. SEALED CONCRETE FLOOR SLAB, REFER TO STRUCTURAL DRAWINGS FOR ADDITIONAL INFORMATION.
2. CONCRETE FOUNDATION SYSTEM, REFER TO STRUCTURAL DRAWINGS FOR ADDITIONAL INFORMATION.
3. STRUCTURAL COLUMN, REFER TO STRUCTURAL DRAWINGS FOR ADDITIONAL INFORMATION.
4. STRUCTURAL MEMBER, REFER TO STRUCTURAL DRAWINGS FOR ADDITIONAL INFORMATION.
5. 8 INCH WIDE CONCRETE MASONRY UNIT WALL. REFER TO EXTERIOR ELEVATION FOR COLOR/TEXTURE PATTERNS. REFER TO STRUCTURAL DRAWINGS FOR ADDITIONAL INFORMATION.
6. 12 INCH WIDE CONCRETE MASONRY UNIT WALL. REFER TO STRUCTURAL DRAWINGS FOR ADDITIONAL INFORMATION.
7. METAL STUD WALL FURRING WITH GYPSUM WALLBOARD FINISH.
8. R-13 THERMAL INSULATION IN WALL CAVITY, FLOOR TO UNDERSIDE OF STRUCTURE ABOVE.
9. ROOFTOP MOUNTED SAFETY LINE TIE-OFF POST.
10. ROOF ACCESS.
11. FIBERGLASS WALKWAY GRATING.
12. 42" HIGH METAL GUARDRAIL, REFER TO STRUCTURAL DRAWINGS FOR ADDITIONAL INFORMATION.
13. STANDING SEAM METAL ROOFING OVER UNDERLAYMENT OVER OSB/POLYISOCYANURATE RIGID INSULATION OVER VAPOR BARRIER OVER STRUCTURAL ROOF DECK.
14. PRE-FINISHED SHEET METAL RIDGE CAP, MATCH STANDING SEAM METAL ROOF COLOR.
15. CANOPY. REFER TO DETAILS 12, AND 13/A008 FOR ADDITIONAL INFORMATION.
16. PRE-FINISHED METAL WALL PANEL ASSEMBLY. SEE DETAIL # 32/A007 FOR ADDITIONAL INFORMATION.
17. BUILT-UP ROOFING OVER UNDERLAYMENT OVER TAPERED OSB /POLYISOCYANURATE RIGID INSULATION OVER VAPOR BARRIER OVER STRUCTURAL STEEL DECKING. SLOPE TO ROOF/OVERFLOW DRAINS.
18. CRICKET.
19. WALL LOUVER. REFER TO MECHANICAL DRAWINGS FOR ADDITIONAL INFORMATION.
20. GLAZING. REFER TO OPENING SCHEDULE FOR ADDITIONAL INFORMATION.
21. ACCESS HATCH, REFER TO MECHANICAL DRAWINGS FOR ADDITIONAL INFORMATION
22. FLOOR GRATE WITH MAXIMUM 1/4 INCH OPEN GAP
23. DUCT DROP SPACE
24. INTERIOR VERTICAL EXPANSION JOINT COVER

5 0 5 10 20 40
SCALE: 3/32" = 1'-0"

LAST SAVED BY: rcstensby LAST UPDATED: 2/1/2012 10:56am

No.	DATE	REVISIONS	APPROVED

DESIGNED: RBF
DRAWN: rcs
CHECKED: wdg

RBF CONSULTING

carollo

IRVINE RANCH WATER DISTRICT

WILLIAM D. GRAEBER CA LIC NO. C11052 ARCHITECT DATE
CINDY MILLER RCE NO. 58116 PROJECT MANAGER DATE
PATRICIA UEMATSU RCE NO. 36762 PRINCIPAL ENGINEER DATE

STATE OF CALIFORNIA WILLIAM D. GRAEBER #C11052 EXPIRES 5/31/2013 REGISTERED ARCHITECT

IRVINE RANCH WATER DISTRICT
BAKER WATER TREATMENT PLANT
PROJECT NO. 11218

TREATMENT BUILDING SECTION I

DRAWING A311

SHEET 146 OF 632

NOTES

1. REFER TO GENERAL ARCHITECTURAL NOTES FOR ADDITIONAL INFORMATION AND REQUIREMENTS.
2. WHERE NO CONSTRUCTION DETAILS ARE SHOWN OR NOTED FOR ANY PART OF THE WORK, DETAILS SHALL BE THE SAME AS FOR OTHER SIMILAR WORK.
3. COORDINATE ALL UTILITY CONNECTION PRIOR TO EXECUTION OF THIS WORK.

KEY NOTES

SOC WMA

1. SEALED CONCRETE FLOOR SLAB, REFER TO STRUCTURAL DRAWINGS FOR ADDITIONAL INFORMATION.
2. CONCRETE FOUNDATION SYSTEM, REFER TO STRUCTURAL DRAWINGS FOR ADDITIONAL INFORMATION.
3. STRUCTURAL COLUMN, REFER TO STRUCTURAL DRAWINGS FOR ADDITIONAL INFORMATION.
4. STRUCTURAL MEMBER, REFER TO STRUCTURAL DRAWINGS FOR ADDITIONAL INFORMATION.
5. 8 INCH WIDE CONCRETE MASONRY UNIT WALL. REFER TO EXTERIOR ELEVATION FOR COLOR/TEXTURE PATTERNS. REFER TO STRUCTURAL DRAWINGS FOR ADDITIONAL INFORMATION.
6. 12 INCH WIDE CONCRETE MASONRY UNIT WALL. REFER TO STRUCTURAL DRAWINGS FOR ADDITIONAL INFORMATION.
7. METAL STUD WALL FURRING WITH GYPSUM WALLBOARD FINISH.
8. R-13 THERMAL INSULATION IN WALL CAVITY, FLOOR TO UNDERSIDE OF STRUCTURE ABOVE.
9. ROOFTOP MOUNTED SAFETY LINE TIE-OFF POST.
10. ROOF ACCESS.
11. FIBERGLASS WALKWAY GRATING.
12. 42" HIGH METAL GUARDRAIL, REFER TO STRUCTURAL DRAWINGS FOR ADDITIONAL INFORMATION.
13. STANDING SEAM METAL ROOFING OVER UNDERLAYMENT OVER OSB/POLYISOCYANURATE RIGID INSULATION OVER VAPOR BARRIER OVER STRUCTURAL ROOF DECK.
14. PRE-FINISHED SHEET METAL RIDGE CAP, MATCH STANDING SEAM METAL ROOF COLOR.
15. CANOPY. REFER TO DETAILS 12, AND 13/A008 FOR ADDITIONAL INFORMATION.
16. PRE-FINISHED METAL WALL PANEL ASSEMBLY. SEE DETAIL # 32/A007 FOR ADDITIONAL INFORMATION.
17. BUILT-UP ROOFING OVER UNDERLAYMENT OVER TAPERED OSB /POLYISOCYANURATE RIGID INSULATION OVER VAPOR BARRIER OVER STRUCTURAL STEEL DECKING. SLOPE TO ROOF/OVERFLOW DRAINS.
18. CRICKET.
19. WALL LOUVER. REFER TO MECHANICAL DRAWINGS FOR ADDITIONAL INFORMATION.
20. GLAZING. REFER TO OPENING SCHEDULE FOR ADDITIONAL INFORMATION.
21. ACCESS HATCH, REFER TO MECHANICAL DRAWINGS FOR ADDITIONAL INFORMATION
22. FLOOR GRATE WITH MAXIMUM 1/4 INCH OPEN GAP
23. DUCT DROP SPACE
24. INTERIOR VERTICAL EXPANSION JOINT COVER

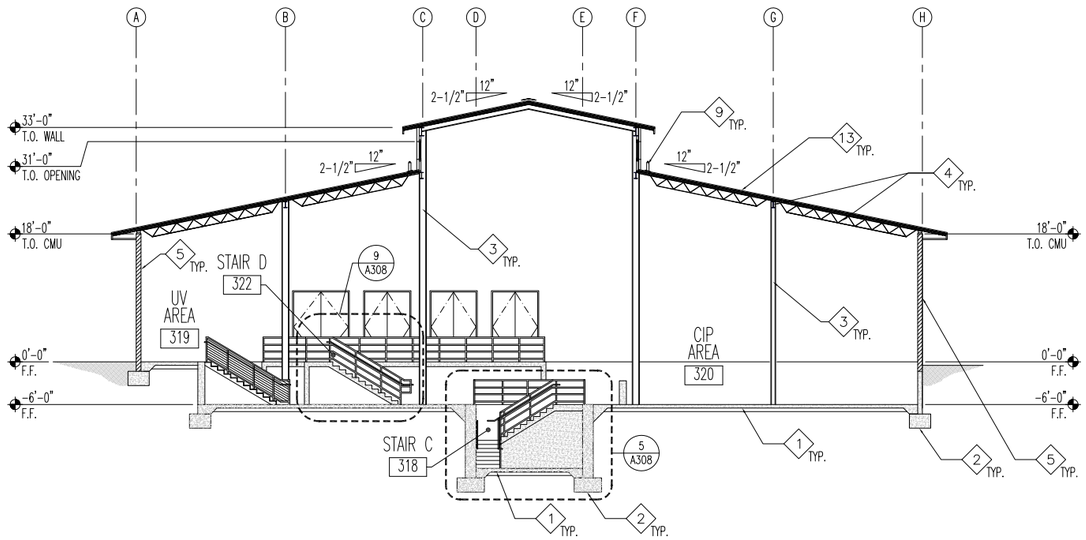

BUILDING SECTION 3/A302
SCALE: 3/32" = 1'-0"

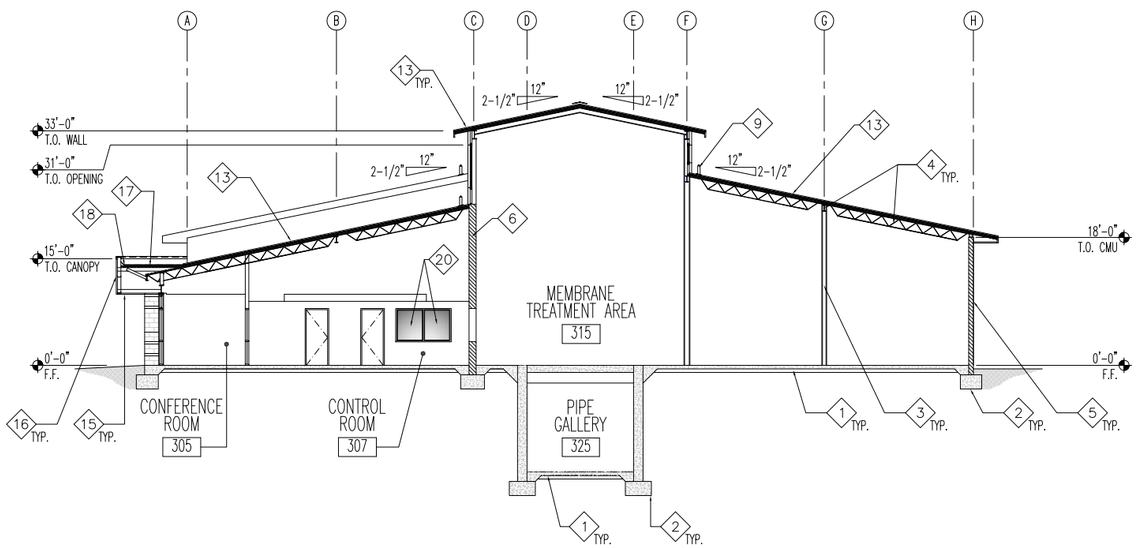

BUILDING SECTION 2/A302
SCALE: 3/32" = 1'-0"

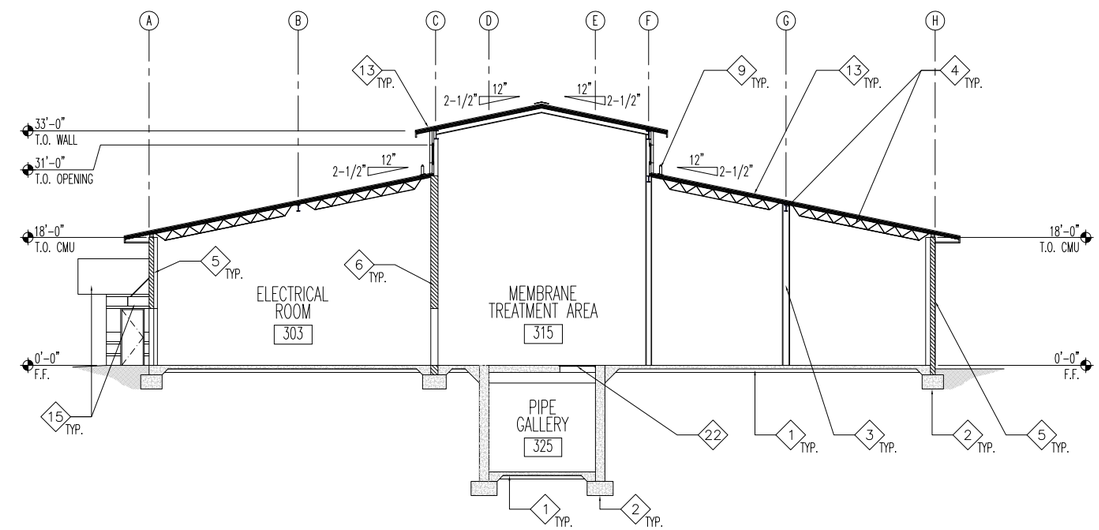

BUILDING SECTION 1/A302
SCALE: 3/32" = 1'-0"

5 0 5 10 20 40
SCALE: 3/32" = 1'-0"

LAST SAVED BY: rcstensby
LAST UPDATED: 2/1/2012 10:56am

No.	DATE	REVISIONS	APPROVED

DESIGNED: RBF--
DRAWN: rcs----
CHECKED: wdg--

RBF CONSULTING

carollo

IRVINE RANCH WATER DISTRICT

WILLIAM D. GRAEBER	CA LIC NO. C11052	ARCHITECT	DATE
CINDY MILLER	RCE NO. 58116	PROJECT MANAGER	DATE
PATRICIA UEMATSU	RCE NO. 36762	PRINCIPAL ENGINEER	DATE

STATE OF CALIFORNIA WILLIAM D. GRAEBER #C11052 EXPIRES 5/31/2013 REGISTERED ARCHITECT

IRVINE RANCH WATER DISTRICT
BAKER WATER TREATMENT PLANT
PROJECT NO. 11218

TREATMENT BUILDING SECTION II

DRAWING A312

SHEET 147 OF 632

LEGEND

MATERIALS:

FLOOR
- FL1 CONCRETE
- FL2 VINYL COMP.TILE
- FL3 SHEET VINYL
- FL4 CERAMIC TILE
- FL5 CARPET TILE
- FL6 STEEL GRATE

BASE
- B1 TOP SET – RUBBER
- B2 CERAMIC TILE BASE
- B3 CONCRETE CURB 12" HIGH

WALL
- W1 GYP. BD.
- W2 W.R. GYP. BD.
- W3 METAL WALL PANEL
- W4 CONCRETE MASONRY UNITS
- W5 CONCRETE
- W6 CERAMIC TILE
- W7 FRP PANEL FULL HEIGHT
- W8 FRP PANELS AT 6'–0" WAINSCOT HEIGHT

CEILING
- C1 GYP. BD.
- C2 F.R. GYP. BD.
- C3 EXPOSED CONSTRUCTION
- C4 2' x 4' LAY–IN ACOUSTIC CEILING PANELS
- C5 FULL ROOM ACOUSTIC INSULATION ABOVE FINISH CEILING

DOOR
- D1 WOOD
- D2 HOLLOW METAL
- D3 ALUMINUM
- D4 GLASS
- D5 STEEL

DOOR FRAME
- DF1 WOOD
- DF2 HOLLOW METAL
- DF3 STEEL
- DF4 ALUMINUM

CORE/GLASS
- CG1 HOLLOW
- CG2 SOLID
- CG3 GLASS
- CG4 WOOD & TEMP. GLASS
- CG5 RIGID INSULATION
- CG6 GLASS BLOCK

WINDOW
- WW1 WOOD

WINDOW FRAME
- WF1 WOOD
- WF2 ALUM.
- WF3 HOLLOW METAL

LOUVER
- L1 PRE–FINISH LOUVER ASSEMBLY

FINISHES:

- F1 FACTORY FINISH
- F2 GLAZED
- F3 STAIN (PREFINISHED)
- F4 PRIMED & PAINTED
- F5 SEALED CONCRETE
- F6 STAINED AND SEALED
- F7 FACTORY FINISH T–BAR
- F8 EXPOSED CONSTRUCTION
- F9 WATER REPELLANT COATING

DOOR & OPENING NOTES

1. PROVIDE FULL WEATHERSTRIPPING PERIMETER OF FRAME.
2. PROVIDE OVERHEAD DOOR CLOSER.
3. PROVIDE PANIC HARDWARE AT ACTIVE LEAF.
4. PROVIDE COORDINATOR ASTRAL AND SEALS.
5. PROVIDE DOOR STOP.
6. ALL DOORS & FRAME TO BE "MAXIMUM DUTY" MODEL 2 SEAMLESS.
7. ACCESS CONTROL SYSTEM READER/KEYPAD & DOOR RELEASE.
8. PROVIDE INSECT SCREEN AT INTERIOR SIDE OF LOUVER PANELS.
9. PROVIDE DOOR BOTTOM SEAL(S).
10. DUAL GLAZED WINDOW IN WINDOW FRAME.
11. NOT USED.
12. ALL GLAZING TO BE TEMPERED PER UBC STANDARD 24.2. PART 1.
13. AT TEMPERED GLAZING LOCATIONS GLAZING TO HAVE A PERMANENT LABEL AND SHALL BE VISIBLE PER UCB 2406.2.
14. DOOR TO BE UNDERCUT BY 1"
15. PROVIDE ACCESSIBLE DOOR SIGNAGE AS REQUIRED PER 11/A002.
16. PROVIDE DOOR SIGNAGE AS REQUIRED PER 13/A002.
17. DOOR TO RECEIVE INTERNATIONAL SYMBOL OF ACCESS PER 12/A002.
18. ALL EXIT DOORS SHALL BE OPERABLE FROM THE INSIDE WITHOUT KEY OR SPECIAL KNOWLEDGE OR EFFORT. ANY LOCKS ON EXIT DOORS MUST BE RELEASED BY NORMAL OPERATION FROM THE INSIDE WITHOUT KEY OR SPECIAL KNOWLEDGE OR EFFORT (EXIT HANDLES OR PANIC BARS MUST RELEASE LOCKS) PER SECTION 1003.0.1.8.

DOOR SCHEDULE

DOOR NO.	OPENING WIDTH	OPENING HEIGHT	DOOR THICKNESS	DOOR TYPE	DOOR MATERIAL	DOOR FINISH	DOOR CORE / GL	FRAME MATERIAL	FRAME FINISH	HARDWARE SET #	LABEL	DETAILS HEAD	DETAILS JAMB	DETAILS JAMB	DETAILS THRESHOLD	REMARKS
301	3'–0"	7'–10"	1 3/4"	FF	D2	F4	CG5	DF2	F4	–	–	51/A004	51/A004	51/A004	52/A004	1, 2, 3, 5, 6, 7, 9, 18
302	8'–0"	7'–10"	1 3/4"	CC	D2	F4	CG5	DF2	F4	–	–	51/A004	51/A004	51/A004	52/A004	1, 2, 3, 5, 6, 9, 18
303	8'–0"	7'–10"	1 3/4"	BB	D2	F4	CG1	DF2	F4	–	–	31/A004	31/A004	31/A004	43/A004	2, 3, 4, 5, 6
304	3'–0"	7'–10"	1 3/4"	FF	D2	F4	CG5	DF2	F4	–	–	51/A004	51/A004	51/A004	52/A004	1, 2, 3, 5, 6, 7, 9, 18
305	6'–0"	7'–10"	1 3/4"	BB	D2	F4	CG1	DF2	F4	–	–	31/A004	31/A004	31/A004	43/A004	2, 3, 4, 5, 6
306	7'–8"	7'–10"	1 3/4"	CC	D2	F4	CG5	DF2	F4	–	–	51/A004	51/A004	51/A004	52/A004	1, 2, 3, 5, 6, 9, 18
307	7'–8"	7'–10"	1 3/4"	BB	D2	F4	CG1	DF2	F4	–	–	31/A004	31/A004	31/A004	43/A004	2, 3, 4, 5, 6, 7
308	3'–0"	7'–10"	1 3/4"	AA	D2	F4	CG1	DF2	F4	–	–	31/A004	31/A004	31/A004	43/A004	1, 2, 3, 5, 6, 7, 9, 18
309	6'–0"	7'–10"	1 3/4"	EE	D3	F1	CG1	DF4	F4	–	–	32/A004	–	–	33/A004	1, 2, 3, 5, 6, 7, 9, 12, 13, 15, 16, 17, 18
310	3'–0"	7'–10"	1 3/4"	AA	D3	F1	CG1	DF2	F4	–	–	41/A004	41/A004	41/A004	42/A004	5, 6, 12, 13
311	3'–0"	7'–10"	1 3/4"	AA	D2	F1	CG1	DF2	F4	–	–	41/A004	41/A004	41/A004	42/A004	5, 6, 14, 15, 16
312	3'–0"	7'–10"	1 3/4"	AA	D2	F1	CG1	DF2	F4	–	–	41/A004	41/A004	41/A004	43/A004	5, 6, 14, 16
313	3'–0"	7'–10"	1 3/4"	AA	D2	F1	CG1	DF2	F4	–	–	41/A004	41/A004	41/A004	42/A004	1, 2, 3, 5, 6, 16
314	3'–0"	7'–10"	1 3/4"	AA	D2	F1	CG1	DF2	F4	–	–	41/A004	41/A004	41/A004	42/A004	5, 6, 16
315	3'–0"	7'–10"	1 3/4"	DD	D3	F1	CG1	DF2	F4	–	–	41/A004	41/A004	41/A004	42/A004	2, 5, 6, 7, 12, 13, 16
316	6'–0"	7'–10"	1 3/4"	EE	D3	F4	CG1	DF2	F4	–	–	31/A004	31/A004	31/A004	42/A004	2, 3, 4, 5, 6, 9, 12, 13, 16
317	3'–0"	7'–10"	1 3/4"	DD	D3	F4	CG1	DF2	F4	–	–	31/A004	31/A004	31/A004	42/A004	2, 5, 6, 7, 9, 12, 13, 16
318	7'–8"	7'–10"	1 3/4"	CC	D2	F4	CG5	DF2	F4	–	–	51/A004	51/A004	51/A004	52/A004	1, 2, 3, 5, 6, 7, 9, 18
319	3'–0"	7'–10"	1 3/4"	AA	D2	F4	CG1	DF2	F4	–	–	31/A004	31/A004	31/A004	43/A004	2, 5, 6
320	12'–8"	12'–0"	1 3/4"	CC	D2	F4	CG5	DF2	F4	–	–	51/A004	51/A004	51/A004	52/A004	1, 2, 3, 4, 5, 6, 9, 18
321	3'–0"	7'–10"	1 3/4"	FF	D2	F4	CG5	DF2	F4	–	–	51/A004	51/A004	51/A004	52/A004	1, 2, 3, 5, 6, 7, 9, 18
322	7'–8"	10'–0"	1 3/4"	CC	D2	F4	CG5	DF2	F4	–	–	51/A004	51/A004	51/A004	52/A004	1, 2, 3, 4, 5, 6, 7, 9, 18
323	6'–4"	10'–0"	1 3/4"	CC	D2	F4	CG5	DF2	F4	–	–	51/A004	51/A004	51/A004	52/A004	1, 2, 3, 4, 5, 6, 7, 9, 18
324	6'–4"	10'–0"	1 3/4"	CC	D2	F4	CG5	DF2	F4	–	–	51/A004	51/A004	51/A004	52/A004	1, 2, 3, 4, 5, 6, 7, 9, 18
325	6'–4"	10'–0"	1 3/4"	CC	D2	F4	CG5	DF2	F4	–	–	51/A004	51/A004	51/A004	52/A004	1, 2, 3, 4, 5, 6, 7, 9, 18
326	12'–8"	12'–0"	1 3/4"	CC	D2	F4	CG5	DF2	F4	–	–	51/A004	51/A004	51/A004	52/A004	1, 2, 3, 4, 5, 6, 7, 9, 18
327	3'–0"	7'–10"	1 3/4"	FF	D2	F4	CG5	DF2	F4	–	–	51/A004	51/A004	51/A004	52/A004	1, 2, 3, 5, 6, 7, 9, 18
328	3'–0"	3'–0"	1 3/4"	AA	D2	F4	CG5	DF2	F4	–	–	43/A008	43/A008	43/A008	33/A008	1, 5, 6, 9,

DOOR TYPES

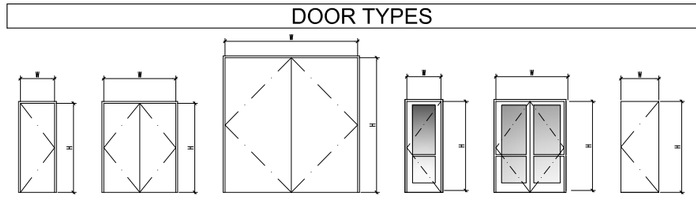

AA BASIC FLUSH DOOR

BB BASIC FLUSH DOUBLE DOOR

CC ACOUSTIC DOUBLE DOOR

DD STOREFRONT DOOR

EE STOREFRONT DOUBLE DOOR

FF ACOUSTIC SINGLE DOOR

OPENING TYPES

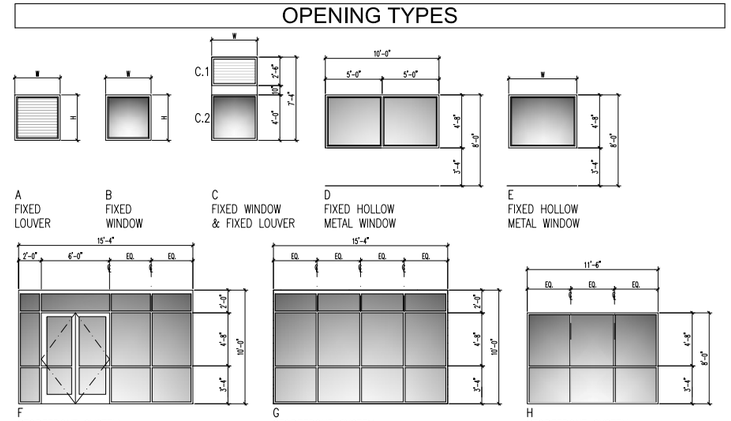

A FIXED LOUVER

B FIXED WINDOW

C FIXED WINDOW & FIXED LOUVER

D FIXED HOLLOW METAL WINDOW

E FIXED HOLLOW METAL WINDOW

F STOREFRONT SYSTEM

G STOREFRONT SYSTEM

H STOREFRONT SYSTEM

NOTES

SOC WMA

1. REFER TO GENERAL ARCHITECTURAL NOTES FOR ADDITIONAL INFORMATION AND REQUIREMENTS.
2. WHERE NO CONSTRUCTION DETAILS ARE SHOWN OR NOTED FOR ANY PART OF THE WORK, DETAILS SHALL BE THE SAME AS FOR OTHER SIMILAR WORK.

OPENING SCHEDULE (WINDOWS/LOUVERS/MASONRY OPENINGS)

OPENING NO.	OPENING WIDTH	OPENING HEIGHT	OPENING THICKNESS	OPENING TYPE	OPENING MATERIAL	OPENING FINISH	OPENING LABEL	GLASS CORE	GLASS THICK	LOUVER TYPE	LOUVER THICK	LOUVER MATERIAL	LOUVER FINISH	DETAILS HEAD	DETAILS JAMB	DETAILS JAMB	DETAILS SILL	REMARKS
301	15'–4"	10'–0"	6"	G	WF2	F1	–	CG3	1/4"	–	–	–	–	11/A004	11/A004	11/A004	12/A004	1, 14, 16, 17
302	15'–4"	10'–0"	6"	F	WF2	F1	–	CG3	1/4"	–	–	–	–	11/A004	11/A004	11/A004	12/A004	1, 14, 16, 17
303	11'–6"	8'–2"	6"	H	WF2	F1	–	CG3	1/4"	–	–	–	–	22/A004	22/A004	22/A004	23/A004	16, 17
304	10'–0"	4'–8"	6"	D	WF3	F1	–	CG3	1/4"	–	–	–	–	43/A006	43/A006	43/A006	51/A006	1, 16, 17
305	10'–0"	4'–8"	6"	D	WF3	F1	–	CG3	1/4"	–	–	–	–	43/A006	43/A006	43/A006	51/A006	1, 16, 17
306	8'–0"	4'–8"	6"	D	WF3	F1	–	CG3	1/4"	–	–	–	–	22/A004	22/A004	22/A004	23/A004	1, 16, 17
307	4'–0"	4'–8"	6"	E	WF3	F1	–	CG3	1/4"	–	–	–	–	52/A006	52/A006	52/A006	53/A006	1, 16, 17
308	6'–0"	12'–0"	–	–	–	–	–	–	–	A	6"	L1	F10	21/A005	21/A005	21/A005	22/A005	12
309	6'–0"	12'–0"	–	–	–	–	–	–	–	A	6"	L1	F10	21/A005	21/A005	21/A005	22/A005	12
310	4'–0"	8'–0"	–	–	–	–	–	–	–	A	6"	L1	F10	11/A005	12/A005	12/A005	13/A005	12
311	4'–0"	8'–0"	–	–	–	–	–	–	–	A	6"	L1	F10	11/A005	12/A005	12/A005	13/A005	12
351	4'–0"	2'–6"	–	–	–	–	–	–	–	A	5"	L1	F10	31/A005	32/A005	32/A005	33/A005	12
352	4'–0"	2'–6"	–	–	–	–	–	–	–	A	5"	L1	F10	31/A005	32/A005	32/A005	33/A005	12
353	4'–0"	2'–6"	–	–	–	–	–	–	–	A	5"	L1	F10	31/A005	32/A005	32/A005	33/A005	12
354	4'–0"	2'–6"	–	–	–	–	–	–	–	A	5"	L1	F10	31/A005	32/A005	32/A005	33/A005	12
355.1	4'–0"	2'–6"	–	–	–	–	–	–	–	C.1	5"	L1	F10	31/A005	32/A005	32/A005	33/A005	12
355.2	4'–0"	4'–0"	5"	C.2	WF3	F1	–	CG3	1/4"	–	–	–	–	51/A005	51/A005	51/A005	52/A005	1, 14
356.1	4'–0"	2'–6"	–	–	–	–	–	–	–	C.1	5"	L1	F10	31/A005	32/A005	32/A005	33/A005	12
356.2	4'–0"	4'–0"	5"	C.2	WF3	F1	–	CG3	1/4"	–	–	–	–	51/A005	51/A005	51/A005	52/A005	1, 14
357.1	4'–0"	2'–6"	–	–	–	–	–	–	–	C.1	5"	L1	F10	31/A005	32/A005	32/A005	33/A005	12
357.2	4'–0"	4'–0"	5"	C.2	WF3	F1	–	CG3	1/4"	–	–	–	–	51/A005	51/A005	51/A005	52/A005	1, 14
358.1	4'–0"	2'–6"	–	–	–	–	–	–	–	C.1	5"	L1	F10	31/A005	32/A005	32/A005	33/A005	12
358.2	4'–0"	4'–0"	5"	C.2	WF3	F1	–	CG3	1/4"	–	–	–	–	51/A005	51/A005	51/A005	52/A005	1, 14
359.1	4'–0"	2'–6"	–	–	–	–	–	–	–	C.1	5"	L1	F10	31/A005	32/A005	32/A005	33/A005	12
359.2	4'–0"	4'–0"	5"	C.2	WF3	F1	–	CG3	1/4"	–	–	–	–	51/A005	51/A005	51/A005	52/A005	1, 14
360	4'–0"	2'–6"	–	–	–	–	–	–	–	A	5"	L1	F10	31/A005	32/A005	32/A005	33/A005	12
361	4'–0"	2'–6"	–	–	–	–	–	–	–	A	5"	L1	F10	31/A005	32/A005	32/A005	33/A005	12
362	4'–0"	2'–6"	–	–	–	–	–	–	–	A	5"	L1	F10	31/A005	32/A005	32/A005	33/A005	12
363	4'–0"	2'–6"	–	–	–	–	–	–	–	A	5"	L1	F10	31/A005	32/A005	32/A005	33/A005	12
364	4'–0"	2'–6"	–	–	–	–	–	–	–	A	5"	L1	F10	31/A005	32/A005	32/A005	33/A005	12
365	4'–0"	2'–6"	–	–	–	–	–	–	–	A	5"	L1	F10	31/A005	32/A005	32/A005	33/A005	12
366	4'–0"	2'–6"	–	–	–	–	–	–	–	A	5"	L1	F10	31/A005	32/A005	32/A005	33/A005	12
367	4'–0"	2'–0"	–	–	–	–	–	–	–	A	5"	L1	F10	31/A005	32/A005	32/A005	33/A005	12
368	4'–0"	2'–0"	–	–	–	–	–	–	–	A	5"	L1	F10	31/A005	32/A005	32/A005	33/A005	12
369	4'–0"	2'–0"	–	–	–	–	–	–	–	A	5"	L1	F10	31/A005	32/A005	32/A005	33/A005	12
370	4'–0"	2'–0"	–	–	–	–	–	–	–	A	5"	L1	F10	31/A005	32/A005	32/A005	33/A005	12
371	4'–0"	2'–0"	–	–	–	–	–	–	–	A	5"	L1	F10	31/A005	32/A005	32/A005	33/A005	12
372	4'–0"	2'–6"	–	–	–	–	–	–	–	A	5"	L1	F10	31/A005	32/A005	32/A005	33/A005	12
373	4'–0"	2'–6"	–	–	–	–	–	–	–	A	5"	L1	F10	31/A005	32/A005	32/A005	33/A005	12
374	4'–0"	2'–6"	–	–	–	–	–	–	–	A	5"	L1	F10	31/A005	32/A005	32/A005	33/A005	12

LAST SAVED BY: rcstensby LAST UPDATED: 2/1/2012 10:57am FILENAME: A313 Opening + Door Schedules.dwg

No.	DATE	REVISIONS	APPROVED

DESIGNED: RBF
DRAWN: rcs
CHECKED: wdg

RBF CONSULTING

carollo

IRVINE RANCH WATER DISTRICT

WILLIAM D. GRAEBER CA LIC NO. C11052 ARCHITECT DATE
CINDY MILLER RCE NO. 58116 PROJECT MANAGER DATE
PATRICIA UEMATSU RCE NO. 36762 PRINCIPAL ENGINEER DATE

STATE OF CALIFORNIA WILLIAM D. GRAEBER #C11052 REGISTERED ARCHITECT 5/31/2013

IRVINE RANCH WATER DISTRICT
BAKER WATER TREATMENT PLANT
PROJECT NO. 11218

TREATMENT BUILDING
DOOR AND OPENING SCHEDULE

DRAWING A313

LEGEND

MATERIALS:

FLOOR
- FL1 CONCRETE
- FL2 VINYL COMP.TILE
- FL3 SHEET VINYL
- FL4 CERAMIC TILE
- FL5 CARPET TILE
- FL6 STEEL GRATE

BASE
- B1 TOP SET – RUBBER
- B2 CERAMIC TILE BASE
- B3 CONCRETE CURB 12" HIGH

WALL
- W1 GYP. BD.
- W2 W.R. GYP. BD.
- W3 METAL WALL PANEL
- W4 CONCRETE MASONRY UNITS
- W5 CONCRETE
- W6 CERAMIC TILE
- W7 FRP PANEL FULL HEIGHT
- W8 FRP PANELS AT 6'–0" WAINSCOT HEIGHT

CEILING
- C1 GYP. BD.
- C2 F.R. GYP. BD.
- C3 EXPOSED CONSTRUCTION
- C4 2' x 4' LAY–IN ACOUSTIC CEILING PANELS
- C5 FULL ROOM ACOUSTIC INSULATION ABOVE FINISH CEILING

DOOR
- D1 WOOD
- D2 HOLLOW METAL
- D3 ALUMINUM
- D4 GLASS
- D5 STEEL

DOOR FRAME
- DF1 WOOD
- DF2 HOLLOW METAL
- DF3 STEEL
- DF4 ALUMINUM

CORE/GLASS
- CG1 HOLLOW
- CG2 SOLID
- CG3 GLASS
- CG4 WOOD & TEMP. GLASS
- CG5 RIGID INSULATION
- CG6 GLASS BLOCK

WINDOW
- WW1 WOOD

WINDOW FRAME
- WF1 WOOD
- WF2 ALUM.
- WF3 HOLLOW METAL

LOUVER
- L1 PRE–FINISH LOUVER ASSEMBLY

FINISHES:

- F1 FACTORY FINISH
- F2 GLAZED
- F3 STAIN (PREFINISHED)
- F4 PRIMED & PAINTED
- F5 SEALED CONCRETE
- F6 STAINED AND SEALED
- F7 FACTORY FINISH T–BAR
- F8 EXPOSED CONSTRUCTION
- F9 WATER REPELLANT COATING

ROOM FINISH SCHEDULE

ROOM NO.	ROOM NAME	FLOOR		BASE		WALLS								CEILING			REMARKS
						NORTH		EAST		SOUTH		WEST					
		MATL.	FIN.	MATL.	FIN.	MATL.	FIN.	MATL.	FIN.	MATL.	FIN.	MATL.	FIN.	MATL.	FIN.	HEIGHT	
301	HVAC ROOM	FL1	F5	–	–	W1	F4	W4	F1	W1	F4	W4	F1	C3	F8	VARIES	–
302	STORAGE ROOM	FL1	F5	–	–	W1	F4	W1	F4	W4	F1	W1	F1	C3	F8	VARIES	–
303	ELECTRICAL ROOM	FL1	F5	–	–	W1	F4	W4	F1	W4	F1	W1	F1	C3	F8	VARIES	–
304	STAIR B	FL1	F5	–	–	W4	F1	W1	F4	W4	F1	W4	F1	C1	F4	10'–0"	–
305	CONFERENCE ROOM	FL5	F1	B1	F1	W1	F4	W1	F4	W1	F4	W1	F1	C4	F7	10'–0"	–
306	ENTRY/OFFICE	FL1	F5	B1	F1	W1	F4	W1	F4	–	–	W1	F1	C4	F7	10'–0"	–
307	CONTROL ROOM	FL5	F1	B1	F1	W1	F4	W1	F4	W4	F1	W1	F4	C3/C4	F8/F7	9'–0"/ 10'–0"	–
308	UNISEX TOILET	FL4	F5	B2	F1	W6	F1	W6	F1	W6	F1	W6	F1	C1	F4	9'–0"	–
309	JANITOR	FL1	F5	B1	F1	W1/W8	F1	W1	F4	W1	F4	W1/W8	F4/F1	C1	F4	9'–0"	–
310	KITCHEN	FL5	F1	B1	F1	W1	F4	W1	F4	W1	F4	W1	F4	C1	F4	9'–0"	–
311	COPY AND FILE ROOM	FL5	F1	B1	F1	W1	F4	W1	F4	W1	F4	W1	F4	C1	F4	9'–0"	–
312	LAB ROOM	FL3	F1	B1	F1	W7	F1	W7	F1	W1	F1	W1	F4	C4	F7	9'–0"	–
313	BLOWER/COMPRESSOR AREA	FL1	F5	–	–	W4	F1	W4	F1	–	–	W4	F1	C3	F8	VARIES	–
314	BOILER AREA	FL1	F5	–	–	–	–	W4	F1	W4	F1	W4	F1	C3	F8	VARIES	–
315	MEMBRANE TREATMENT AREA	FL1	F5	–	–	–	–	–	–	W4	F1	–	–	C3	F8	VARIES	–
316	MFWW EQUALIZATION BASIN	FL1	F5	–	–	W4	F1	W4	F1	–	–	W4	F1	C3	F8	VARIES	–
317	STAIR A	FL1	F5	–	–	–	–	–	–	–	–	W4	F1	C3	F8	VARIES	–
318	STAIR C	FL1	F5	–	–	W5	F8	W5	F8	W5	F8	–	–	C3	F8	VARIES	–
319	UV AREA	FL1	F5	–	–	W4	F1	W4	F1	W5	F8	W5	F8	C3	F8	VARIES	–
320	CIP AREA	FL1	F5	–	–	–	–	W4	F1	W4	F1	–	–	C3	F8	VARIES	–
321	LOADING AREA	FL1	F5	–	–	–	–	W4	F1	–	–	–	–	C3	F8	VARIES	–
322	STAIR D	FL1	F5	–	–	–	–	–	–	–	–	–	–	C3	F8	VARIES	–
323	STAGING AREA I	FL1	F5	–	–	W4	F1	–	–	–	–	W4	F1	C3	F8	VARIES	–
324	STAGING AREA II	FL1	F5	–	–	W4	F1	–	–	–	–	–	–	C3	F8	VARIES	–
325	PIPE GALLERY	FL1	F5	–	–	W5	F8	W5	F8	W5	F8	W5	F8	C3	F8	VARIES	–
326	MFWW EQUALIZATION BASIN	FL1	F5	–	–	W5	F8	W5	F8	W5	F8	W5	F8	C3	F8	VARIES	–
327	TRENCH #1	FL1	F5	–	–	W5	F8	W5	F8	W5	F8	W5	F8	C3	F8	VARIES	–
328	TRENCH #2	FL1	F5	–	–	W5	F8	W5	F8	W5	F8	W5	F8	C3	F8	VARIES	–

NOTES

SOC WMA

1. REFER TO GENERAL ARCHITECTURAL NOTES FOR ADDITIONAL INFORMATION AND REQUIREMENTS.
2. WHERE NO CONSTRUCTION DETAILS ARE SHOWN OR NOTED FOR ANY PART OF THE WORK, DETAILS SHALL BE THE SAME AS FOR OTHER SIMILAR WORK.

LAST SAVED BY: rcstensby LAST UPDATED: 2/1/2012 10:57am FILENAME: A314 Finish Schedule.dwg

No.	DATE	REVISIONS	APPROVED

DESIGNED: RBF
DRAWN: rcs
CHECKED: wdg

RBF CONSULTING

carollo

IRVINE RANCH WATER DISTRICT

WILLIAM D. GRAEBER CA LIC NO. C11052 ARCHITECT DATE
CINDY MILLER RCE NO. 58116 PROJECT MANAGER DATE
PATRICIA UEMATSU RCE NO. 36762 PRINCIPAL ENGINEER DATE

STATE OF CALIFORNIA WILLIAM GRAEBER #C11052 EXPIRES 5/31/2013 REGISTERED ARCHITECT

IRVINE RANCH WATER DISTRICT
BAKER WATER TREATMENT PLANT
PROJECT NO. 11218

TREATMENT BUILDING
FINISH SCHEDULE

DRAWING A314

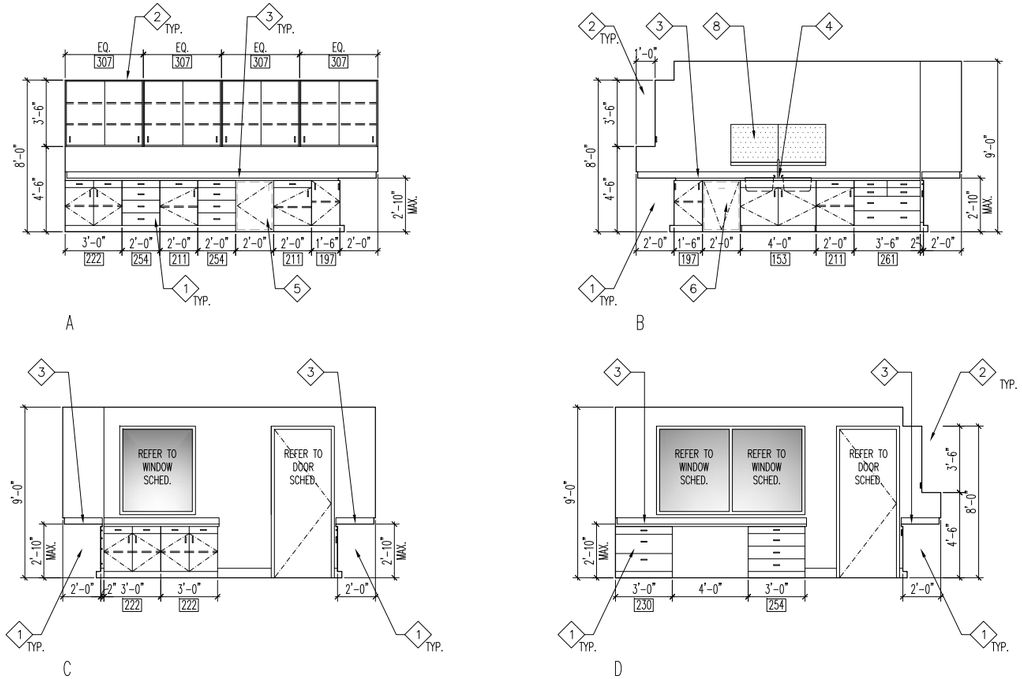

LAB ROOM 312

SCALE: 1/4" = 1'-0"

4 / –

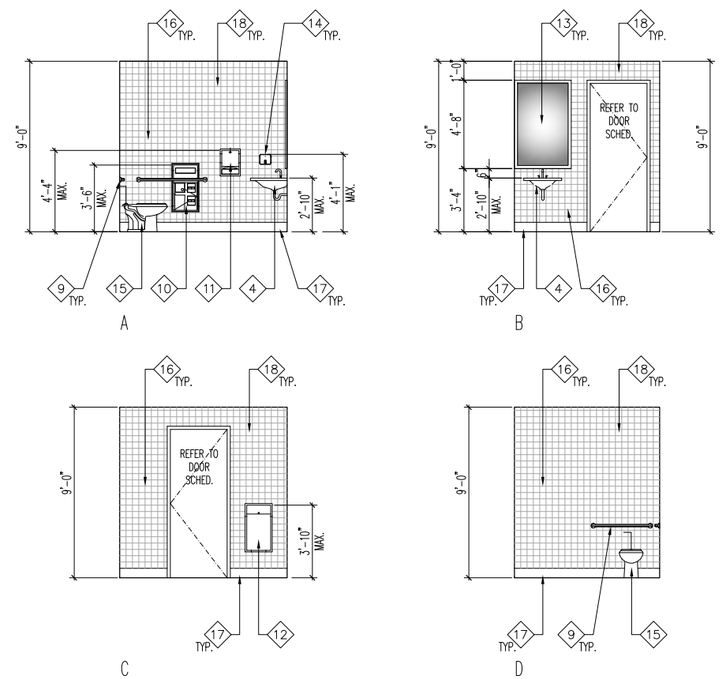

UNISEX TOILET 308

SCALE: 1/4" = 1'-0"

2 / –

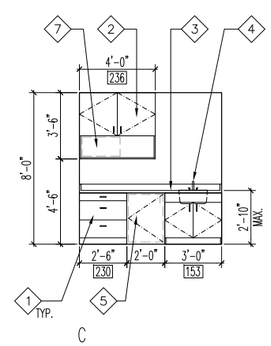

KITCHEN 310

SCALE: 1/4" = 1'-0"

3 / –

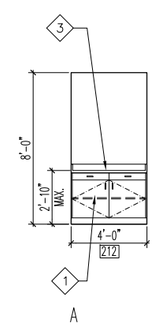

CONFERENCE AREA 305

SCALE: 1/4" = 1'-0"

1 / –

NOTES

1. REFER TO GENERAL ARCHITECTURAL NOTES FOR ADDITIONAL INFORMATION AND REQUIREMENTS.
2. WHERE NO CONSTRUCTION DETAILS ARE SHOWN OR NOTED FOR ANY PART OF THE WORK, DETAILS SHALL BE THE SAME AS FOR OTHER SIMILAR WORK.
3. COORDINATE ALL UTILITY CONNECTION PRIOR TO EXECUTION OF THIS WORK.

SOC WMA

KEY NOTES

1. 24" DEEP BASE CABINET W/ADJUSTABLE SHELVING. REFER TO DETAIL 12/A010.
2. 12" DEEP UPPER CABINETRY W/ADJUSTABLE SHELVING. REFER TO DETAIL 11A010.
3. PLASTIC LAMINATE COUNTERTOP.
4. LAVATORY. REFER TO PLUMBING PLANS FOR ADDITIONAL INFORMATION.
5. UNDER-COUNTERTOP REFRIGERATOR. REFER TO SPECIFICATIONS FOR ADDITIONAL INFORMATION.
6. UNDER-COUNTERTOP GLASS WASH MACHINE. REFER TO SPECIFICATIONS FOR ADDITIONAL INFORMATION.
7. MICROWAVE. REFER TO SPECIFICATIONS FOR ADDITIONAL INFORMATION.
8. WALL MOUNTED PEGBOARD w/ TRAY. REFER TO SPECIFICATIONS FOR ADDITIONAL INFORMATION.
9. 1½" DIAMETER STAINLESS STEEL GRAB BAR. REFER TO DETAIL # 22/A003.
10. RECESSED SEAT-COVER, SANITARY NAPKIN DISPOSAL & TOILET TISSUE DISPENSER
11. RECESSED PAPER TOWEL DISPENSER.
12. RECESSED WASTE RECEPTACLE.
13. STAINLESS STEEL FRAME MIRROR.
14. RECESSED SOAP DISPENSER.
15. WATER CLOSET. REFER TO PLUMBING PLANS FOR ADDITIONAL INFORMATION.
16. 4" x 4" CERAMIC TILE WAINSCOT.
17. 4" x 4" CERAMIC COVED BASE TILE.
18. PAINTED GYPSUM BOARD WALL SURFACE.

FILENAME: A315 Interior Elevations 1.dwg
LAST UPDATED: 2/1/2012 10:57am
LAST SAVED BY: rcstensby

No.	DATE	REVISIONS	APPROVED

DESIGNED: RBF
DRAWN: rcs
CHECKED: wdg

RBF CONSULTING

carollo

IRVINE RANCH WATER DISTRICT

WILLIAM D. GRAEBER	CA LIC NO. C11052	ARCHITECT	DATE
CINDY MILLER	RCE NO. 58116	PROJECT MANAGER	DATE
PATRICIA UEMATSU	RCE NO. 36762	PRINCIPAL ENGINEER	DATE

STATE OF CALIFORNIA WILLIAM GRAEBER #C11052 EXPIRES 5/31/2013 REGISTERED ARCHITECT

IRVINE RANCH WATER DISTRICT
BAKER WATER TREATMENT PLANT
PROJECT NO. 11218

TREATMENT BUILDING
INTERIOR ELEVATIONS

DRAWING A315

SHEET 150 OF 632

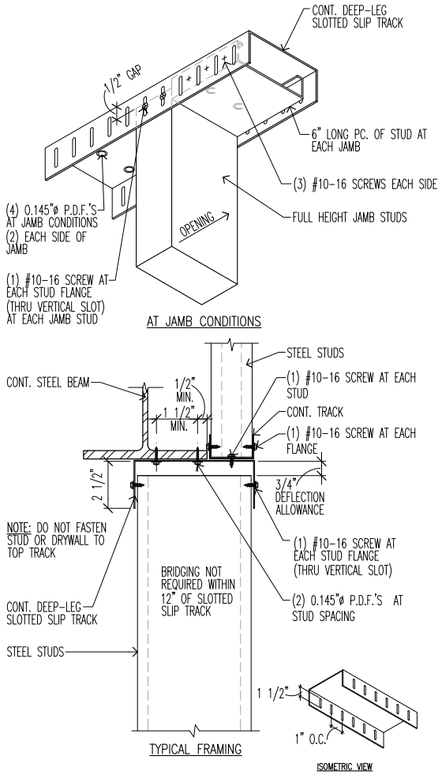

SLOTTED SLIP TRACK AT STEEL BEAM INFILL	3"	52

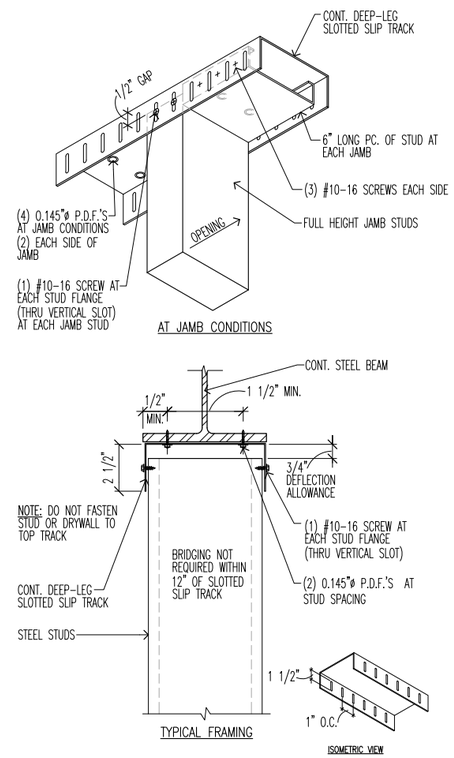

SLOTTED SLIP TRACK AT STEEL BEAM	3"	42

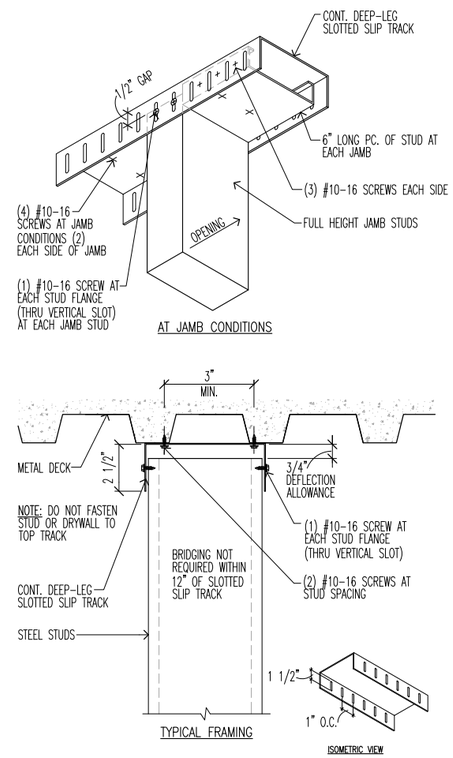

SLOTTED SLIP TRACK AT METAL DECK	3"	32

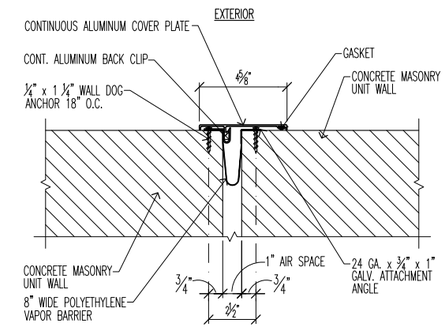

NOTE:
INSTALL EXPANSION JOINT COVER PER MANUFACTURER'S WRITTEN INSTRUCTIONS.

EXTERIOR MASONRY WALL EXPANSION JOINT COVER	3"	21

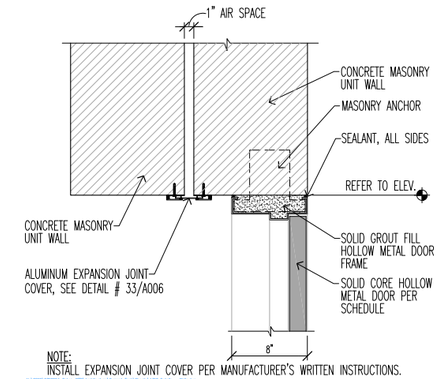

NOTE:
INSTALL EXPANSION JOINT COVER PER MANUFACTURER'S WRITTEN INSTRUCTIONS.

INTERIOR EXPANSION JOINT COVER	1 1/2"	11

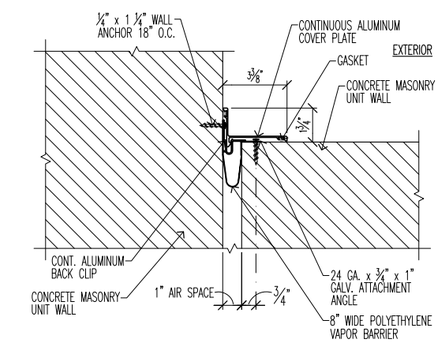

NOTE:
INSTALL EXPANSION JOINT COVER PER MANUFACTURER'S WRITTEN INSTRUCTIONS.

EXTERIOR MASONRY WALL EXPANSION JOINT COVER	3"	22

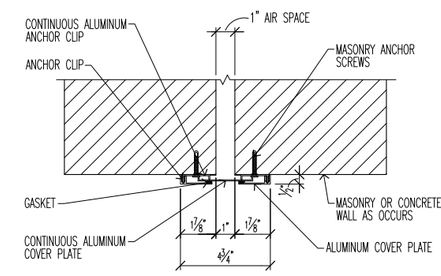

NOTE:
INSTALL EXPANSION JOINT COVER PER MANUFACTURER'S WRITTEN INSTRUCTIONS.

INTERIOR SURFACE MOUNTED WALL JOINT COVER	3"	12

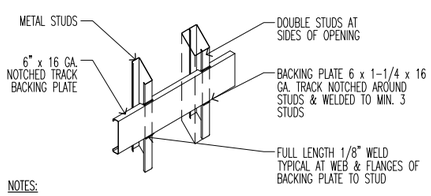

NOTES:

1. THE METAL STUD WITH BACKING TRACK FOR UPPER WALL HUNG CABINETS, BASE CABINETS, FULL HEIGHT CABINETS, FILM VIEWING COUNTERS, WALL HUNG BENCHES, HANDRAILS, GUARDRAILS, GRAB BARS, WALL HUNG EQUIPMENT, TOWEL BARS, ETC. MAXIMUM WEIGHT – 250 POUNDS PER FOOT.
2. VERIFY LENGTH, HEIGHT, LOCATION OF BACKING PLATE AND NUMBER REQUIRED WITH MANUFACTURER OF ITEMS IN NOTES # 1.
3. USE #12 SELF-TAPPING SHEET METAL SCREWS MINIMUM WHEN ATTACHING ITEMS TO BACKING PLATE, VERIFY ACTUAL REQUIREMENTS WITH MANUFACTURERS.
4. WALL STUD FLANGES ARE CONTINUOUS.
5. PROVIDE BACKING TRACK AT WALL HUNG UNITS ONE AT TOP & ONE AT BOTTOM OF CABINETS

METAL STUD WITH BACKING PLATE	1 1/2"	53

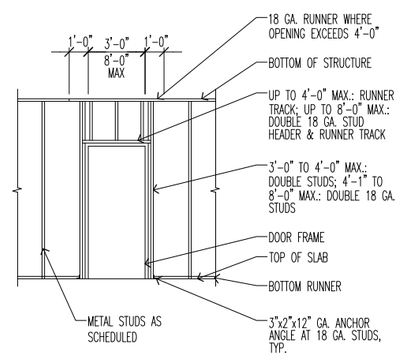

INTERIOR METAL STUD FRAMING AT DOOR OPENING	1/4"	43

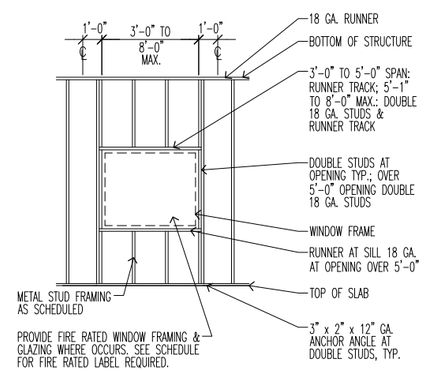

INTERIOR METAL STUD FRAMING AT WINDOW OPENING	1/4"	33

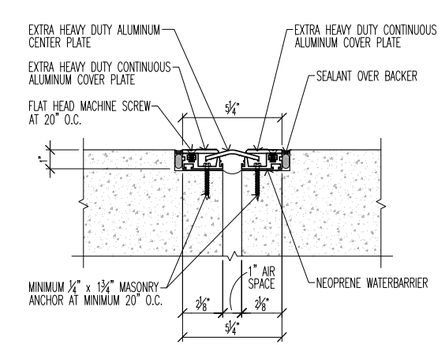

NOTE:
INSTALL FLOOR JOINT COVER PER MANUFACTURER'S WRITTEN INSTRUCTIONS.

FLOOR JOINT COVER – INTERIOR	3"	23

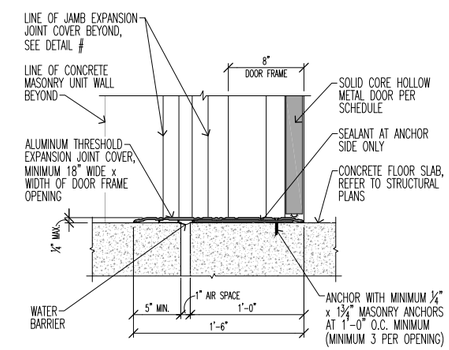

NOTE:
INSTALL DOOR THRESHOLD PER MANUFACTURER'S WRITTEN INSTRUCTIONS.

DOOR THRESHOLD – EXPANSION JOINT COVER	1 1/2"	13

FILENAME: A316 Details – Walls.dwg
LAST UPDATED: 2/1/2012 10:57am
LAST SAVED BY: rcstensby

No.	DATE	REVISIONS	APPROVED

DESIGNED: RBF
DRAWN: rcs
CHECKED: wdg

RBF CONSULTING

carollo

IRVINE RANCH WATER DISTRICT

WILLIAM D. GRAEBER	CA LIC NO. C11052	ARCHITECT	DATE
CINDY MILLER	RCE NO. 58116	PROJECT MANAGER	DATE
PATRICIA UEMATSU	RCE NO. 36762	PRINCIPAL ENGINEER	DATE

STATE OF CALIFORNIA WILLIAM D. GRAEBER #C11052 Expires 5/31/2013 REGISTERED ARCHITECT

IRVINE RANCH WATER DISTRICT
BAKER WATER TREATMENT PLANT
PROJECT NO. 11218

TREATMENT BUILDING DETAILS

DRAWING A316

SHEET 151 OF 632

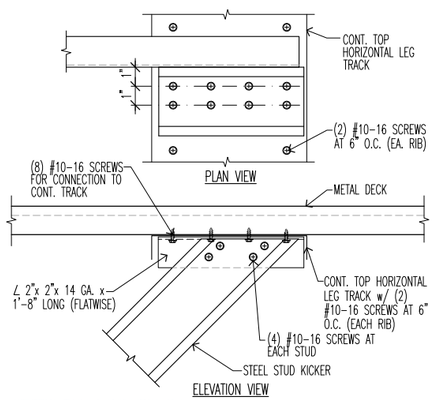

KICKER CONNECTION AT METAL DECK | 3" | **52**

ALLOWABLE STRUT HEIGHTS	
METAL STUD SIZE	MAXIMUM HEIGHT
3 5/8"x20 GA.	9'-0"
3 5/8"x18 GA.	12'-0"

NOTES:

1. PROVIDE STRUTS TO STRUCTURE ABOVE @ 12'-0" O.C. EA. WAY WITH A SIX FEET (6') MAX. DISTANCE FROM ANY WALL.

2. SPLAY WIRES SHALL START A MAX. OF SIX FEET (6') FROM ANY WALL AND SHALL BE LOCATED AT THE SAME INTERSECTION AS THE STRUTS.

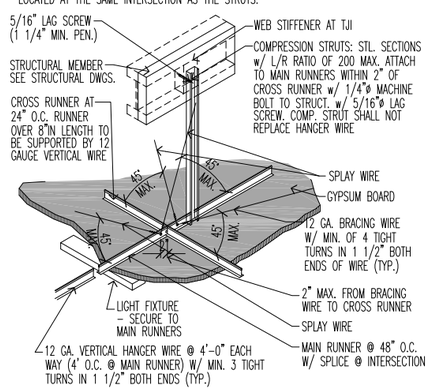

T-BAR BRACING AT GYPSUM BOARD | 1" | **42**

COMPRESSION STRUTS (MAXIMUM LENGTHS)

ELECTRICAL METALLIC TUBING (EMT) DIAMETER	LENGTH	DIAMETER	LENGTH	METAL FRAMING (STUDS) DIAMETER	LENGTH
½"	4'-0"	2"	12-7"	25 GAUGE	4'-0"
¾"	5'-2"	2-½"	16'-6"	(⅝" FLANGES)	
1"	6'-6"	3"	20'-2"	25 GAUGE	8'-0"
1-¼"	8-6"	4"	26'-0"	(1-⅝" FLANGES)	
1-½"	9'-10"				

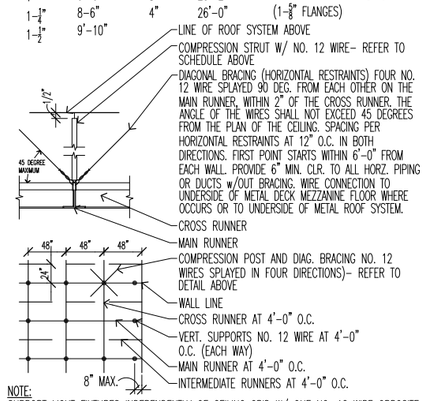

NOTE:
SUPPORT LIGHT FIXTURES INDEPENDENTLY OF CEILING GRID W/ ONE NO. 12 WIRE OPPOSITE CORNERS OF FIXTURE (2 WIRES MIN. PROVIDE EARTHQUAKE CUPS AT ALL FLOURESCENT FIXTURES AND NO. 12 HANGERS W/IN 3" OF EACH CORNER OF EACH FIXTURE.

WIRES SHALL BE ATTACHED TO GRID AND STRUCTURE SO THAT WIRES ARE ABLE TO SUPPORT ACTUAL LOAD (200 LBS. MIN.) W/ A SAFETY FACTOR OF 2.

LAY-IN CEILING BRACING | 1 1/2" | **32**

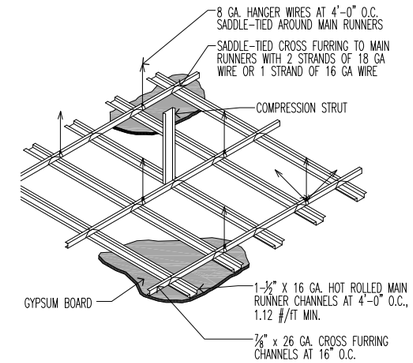

SUSPENDED GYPSUM BOARD CEILING SYSTEM | 1/2" | **21**

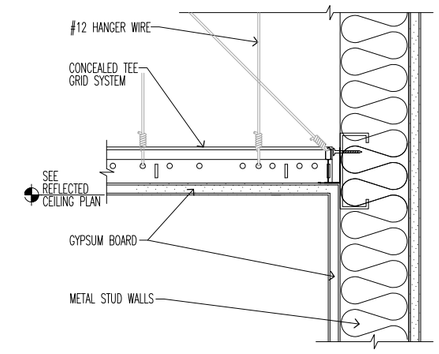

GYPSUM BOARD CEILING SYSTEM AT WALL | 3" | **11**

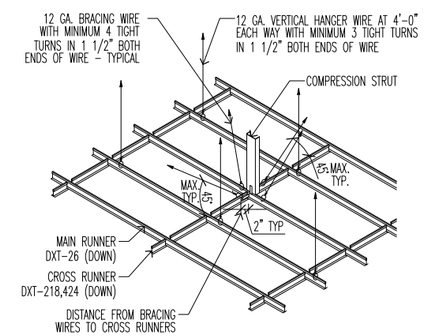

NOTE: CONNECTIONS OF BRACING & HANGER WIRES TO STRUCTURE ABOVE

SUSPENDED ACOUSTICAL CEILING SYSTEM | 1/2" | **22**

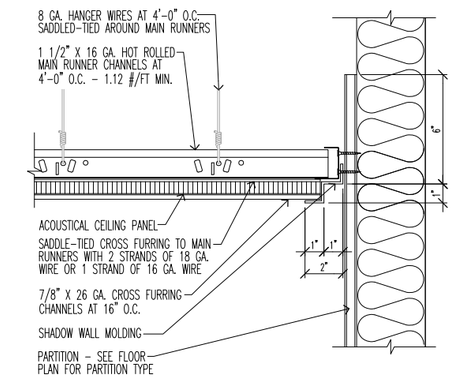

ACOUSTICAL CEILING TILE SYSTEM AT WALL | 3" | **12**

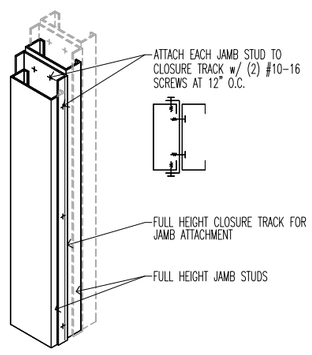

MULTIPLE STUD ATTACHMENT | 3" | **53**

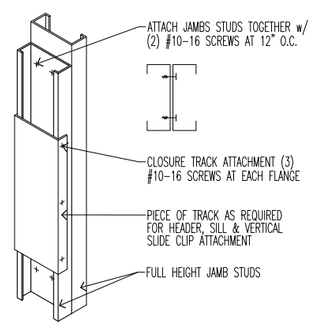

BACK TO BACK STUD ATTACHMENT | 3" | **43**

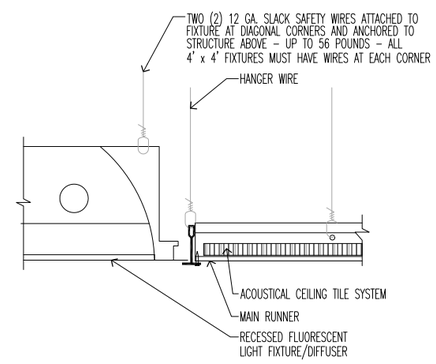

NOTE: PROVIDE ADDITIONAL SUPPORTS WHEN FIXTURES ARE 8' OR LONGER.

SUSPENDED ACOUSTICAL CEILING w/ LIGHT FIXTURE/DIFFUSER | 3" | **33**

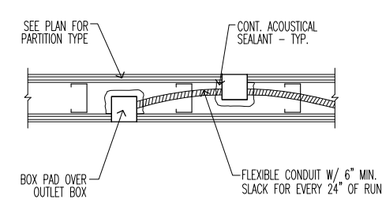

NOTES:

1. PLACE OUTLET BOXES IN SEPARATE STUD SPACES.
2. BACK TO BACK OUTLETS NOT PERMITTED.
3. PLUG ALL UNLISTED KNOCK-OUTS IN OUTLET BOXES WITH KNOCK-OUTS CAPS.
4. PROVIDE BACKING EQUIVALENT TO "LOWRIES" BOX PADS.

OUTLET BOX IN STUD PARTITION | 1" | **23**

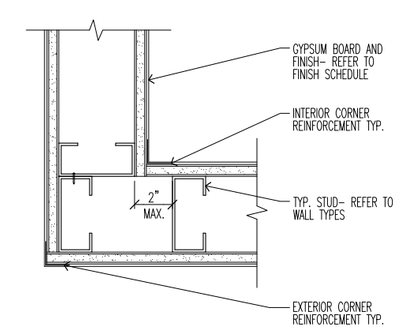

TYPICAL WALL CORNER | 3" | **13**

FILENAME: A317 Details - Ceiling.dwg
LAST UPDATED: 2/1/2012 10:58am
LAST SAVED BY: rcstensby

No.	DATE	REVISIONS	APPROVED

DESIGNED: RBF
DRAWN: rcs
CHECKED: wdg

RBF CONSULTING

carollo

IRVINE RANCH WATER DISTRICT

WILLIAM D. GRAEBER	CA LIC NO. C11052	ARCHITECT	DATE
CINDY MILLER	RCE NO. 58116	PROJECT MANAGER	DATE
PATRICIA UEMATSU	RCE NO. 36762	PRINCIPAL ENGINEER	DATE

STATE OF CALIFORNIA WILLIAM D. GRAEBER #C11052 EXPIRES 5/31/2013 REGISTERED ARCHITECT

IRVINE RANCH WATER DISTRICT
BAKER WATER TREATMENT PLANT
PROJECT NO. 11218

TREATMENT BUILDING DETAILS

DRAWING A317

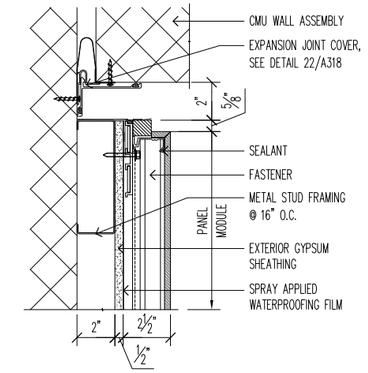

METAL CANOPY VERTICAL JOINT | 3" | 41

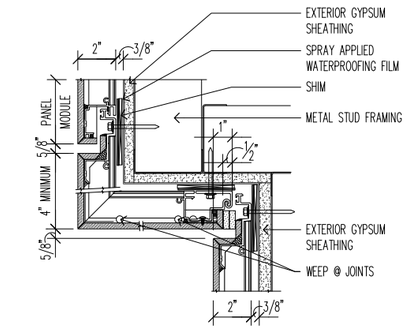

METAL CANOPY SOFFIT @ WALL | 3" | 31

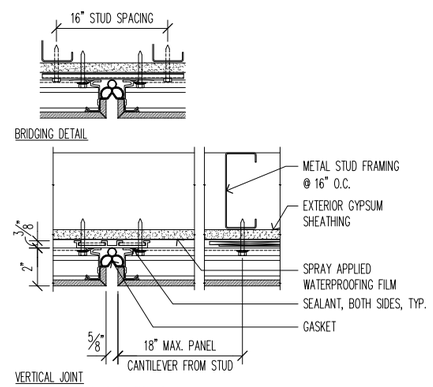

METAL CANOPY VERTICAL JOINT | 3" | 42

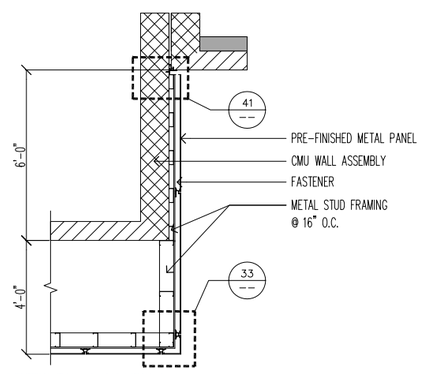

METAL CANOPY ATTACHMENT DETAIL | 3/8" | 32

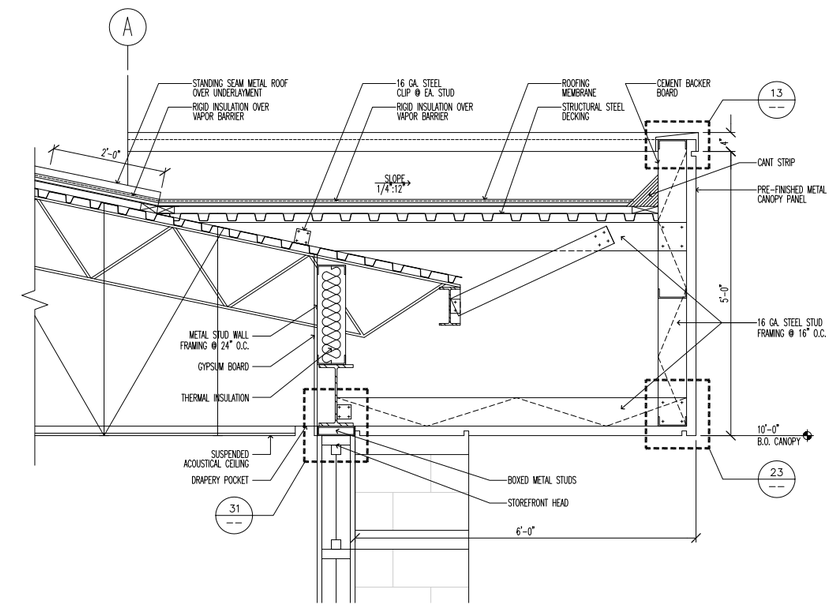

METAL CANOPY AT ENTRY STOREFRONT – SECTION VIEW | 3/4" | 12

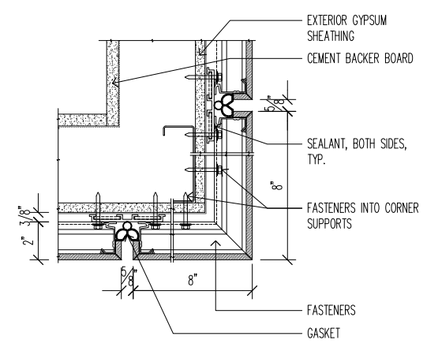

METAL CANOPY @ CORNER | 3" | 33

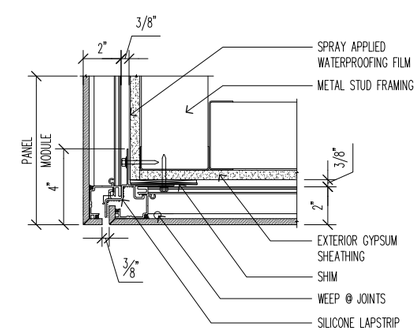

METAL CANOPY SOFFIT @ CORNER | 3" | 23

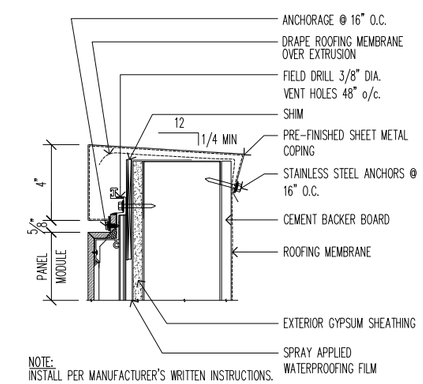

NOTE:
INSTALL PER MANUFACTURER'S WRITTEN INSTRUCTIONS.

METAL CANOPY @ COPING | 3" | 13

FILENAME: A318 Details – Canopy.dwg LAST UPDATED: 2/1/2012 10:58am LAST SAVED BY: mshutaff

No.	DATE	REVISIONS	APPROVED

DESIGNED: RBF
DRAWN: msh
CHECKED: wdg

RBF CONSULTING

carollo

IRVINE RANCH WATER DISTRICT

WILLIAM D. GRAEBER	CA LIC NO. C11052	ARCHITECT	DATE
CINDY MILLER	RCE NO. 58116	PROJECT MANAGER	DATE
PATRICIA UEMATSU	RCE NO. 36762	PRINCIPAL ENGINEER	DATE

STATE OF CALIFORNIA WILLIAM D. GRAEBER #C11052 EXPIRES 5/31/2013 REGISTERED ARCHITECT

IRVINE RANCH WATER DISTRICT
BAKER WATER TREATMENT PLANT
PROJECT NO. 11218

TREATMENT BUILDING
DETAILS - CANOPY

DRAWING A318

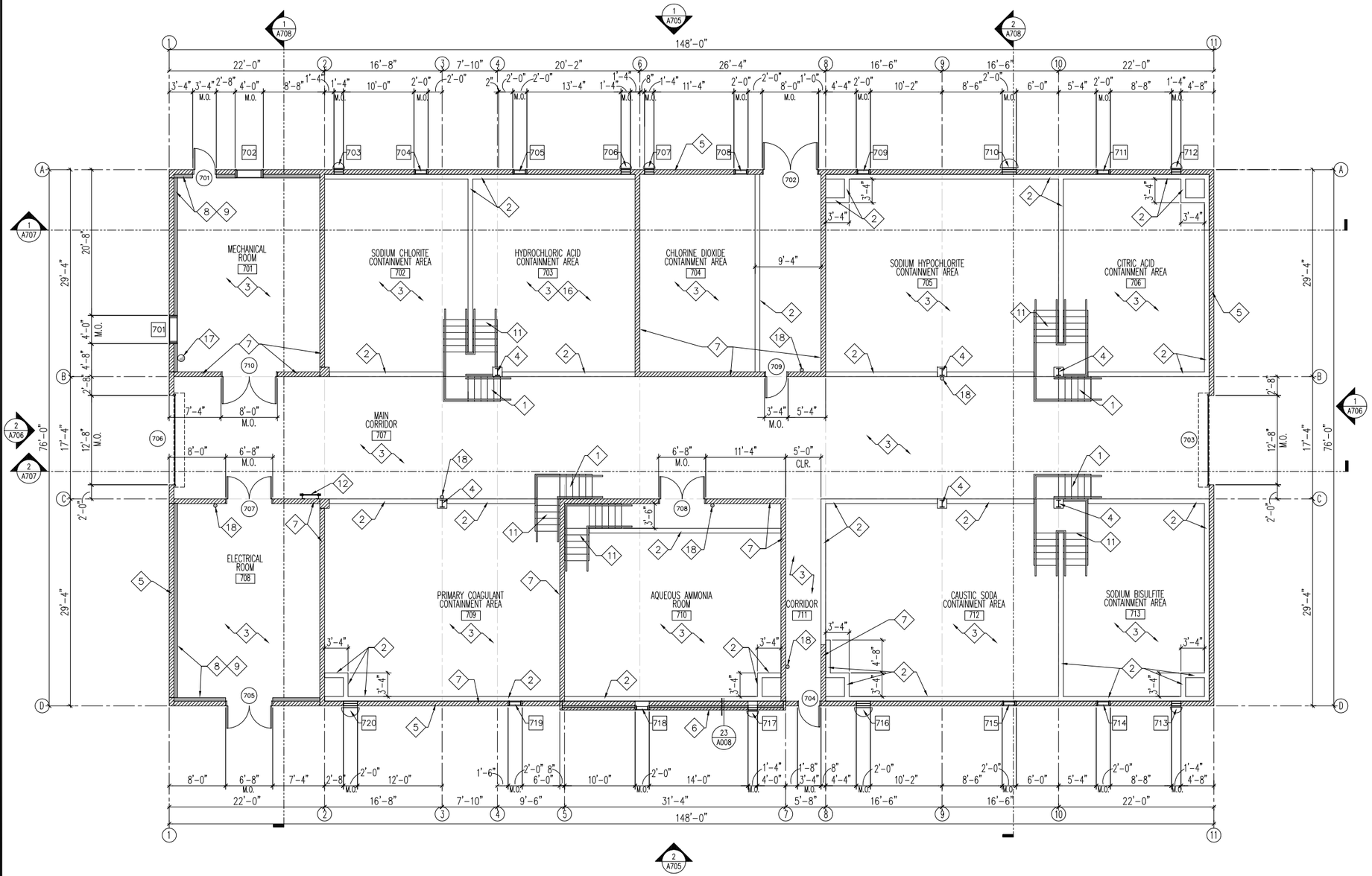

FIRST FLOOR PLAN AND EXITING

SCALE: 1/8" = 1'-0"

NOTES

1. REFER TO GENERAL ARCHITECTURAL NOTES FOR ADDITIONAL INFORMATION AND REQUIREMENTS.
2. WHERE NO CONSTRUCTION DETAILS ARE SHOWN OR NOTED FOR ANY PART OF THE WORK, DETAILS SHALL BE THE SAME AS FOR OTHER SIMILAR WORK.
3. COORDINATE ALL UTILITY CONNECTION PRIOR TO EXECUTION OF THIS WORK.
4. SEE DOOR AND OPENING SCHEDULE IN DRAWING A709.

KEY NOTES

1. REMOVABLE FIBERGLASS STAIR ASSEMBLY, HANDRAIL AND GUARDRAIL ASSEMBLY. REFER TO STRUCTURAL DRAWINGS FOR ADDITIONAL INFORMATION.
2. SEALED CONCRETE CONTAINMENT WALL, REFER TO STRUCTURAL DRAWINGS FOR ADDITIONAL INFORMATION.
3. SEALED CONCRETE FLOOR SLAB, REFER TO STRUCTURAL DRAWINGS FOR ADDITIONAL INFORMATION.
4. STRUCTURAL COLUMN, REFER TO STRUCTURAL DRAWINGS FOR ADDITIONAL INFORMATION.
5. 8 INCH WIDE CONCRETE MASONRY UNIT WALL. REFER TO EXTERIOR ELEVATION FOR COLOR / TEXTURE PATTERNS. REFER TO STRUCTURAL DRAWINGS FOR ADDITIONAL INFORMATION.
6. 4 INCH WIDE CONCRETE MASONRY VENEER OVER INSULATION. REFER TO EXTERIOR ELEVATION FOR COLOR / TEXTURE PATTERNS. REFER TO STRUCTURAL DRAWINGS FOR ADDITIONAL INFORMATION.
7. 8 INCH WIDE PRECISION FACE CONCRETE MASONRY UNIT WALL. REFER TO STRUCTURAL DRAWINGS FOR ADDITIONAL INFORMATION. PRIME AND PAINT.
8. METAL STUD WALL FURRING WITH GYPSUM WALLBOARD FINISH.
9. R-13 THERMAL INSULATION IN WALL CAVITY, FLOOR TO UNDERSIDE OF STRUCTURE ABOVE.
10. CONCRETE PEDESTAL FOR WATER PROCESS SYSTEM FACILITIES. REFER TO STRUCTURAL DRAWINGS FOR ADDITIONAL INFORMATION.
11. CAST-IN-PLACE CONCRETE STAIRS, HANDRAIL AND GUARDRAIL ASSEMBLY. REFER TO STRUCTURAL DRAWINGS FOR ADDITIONAL INFORMATION.
12. ROOF ACCESS LADDER.
13. FIBERGLASS WALKWAY GRATING.
14. ALUMINUM GUARDRAIL.
15. REMOVEABLE SAFETY CHAINLINK.
16. NO FIRE SPRINKLER SYSTEM, THIS AREA ONLY. (WATER REACTIVE CHEMICAL AREA).
17. FIRE SPRINKLER RISER LOCATION.
18. FIRE EXTINGUISHER LOCATION. VERIFY EXACT LOCATION AND QUANTITY WITH FIRE AUTHORITY.

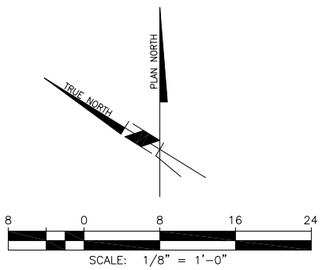

FILENAME: A701 F01 Plan_Exiting.dwg
LAST UPDATED: 2/1/2012 11:13am
LAST SAVED BY: rcstensby

No.	DATE	REVISIONS	APPROVED

DESIGNED: RBF
DRAWN: rcs
CHECKED: wdg

RBF CONSULTING

carollo

IRVINE RANCH WATER DISTRICT

WILLIAM D. GRAEBER	CA LIC NO. C11052	ARCHITECT	DATE
CINDY MILLER	RCE NO. 58116	PROJECT MANAGER	DATE
PATRICIA UEMATSU	RCE NO. 36762	PRINCIPAL ENGINEER	DATE

STATE OF CALIFORNIA WILLIAM D. GRAEBER #C11052 EXPIRES 6/30/2013 REGISTERED ARCHITECT

IRVINE RANCH WATER DISTRICT
BAKER WATER TREATMENT PLANT
PROJECT NO. 11218

CHEMICAL BUILDING
FIRST FLOOR PLAN AND EXITING

DRAWING A701

NOTES

1. REFER TO GENERAL ARCHITECTURAL NOTES FOR ADDITIONAL INFORMATION AND REQUIREMENTS.
2. WHERE NO CONSTRUCTION DETAILS ARE SHOWN OR NOTED FOR ANY PART OF THE WORK, DETAILS SHALL BE THE SAME AS FOR OTHER SIMILAR WORK.
3. COORDINATE ALL UTILITY CONNECTION PRIOR TO EXECUTION OF THIS WORK.
4. SEE DOOR AND OPENING SCHEDULE IN DRAWING A709.

KEY NOTES

1. STRUCTURAL COLUMN, REFER TO STRUCTURAL DRAWINGS FOR ADDITIONAL INFORMATION.
2. STRUCTURAL MEMBER, REFER TO STRUCTURAL DRAWINGS FOR ADDITIONAL INFORMATION.
3. STRUCTURAL DECKING, REFER TO STRUCTURAL DRAWINGS FOR ADDITIONAL INFORMATION.
4. PRE-FINISHED METAL WALL PANEL ASSEMBLY. SEE DETAIL 32/A007 AND 11/A008 FOR ADDITIONAL INFORMATION.
5. LINE OF BUILDING STRUCTURE BELOW.
6. STANDING SEAM METAL ROOFING BELOW. SEE ROOF PLAN FOR ADDITIONAL KEYNOTING INFORMATION.
7. ROOF ACCESS LADDER.
8. FIBERGLASS WALKWAY GRATING.
9. ALUMINUM GUARDRAIL.
10. REMOVEABLE SAFETY CHAINLINK.
11. ROOFTOP MOUNTED SAFETY LINE TIE-OFF POST

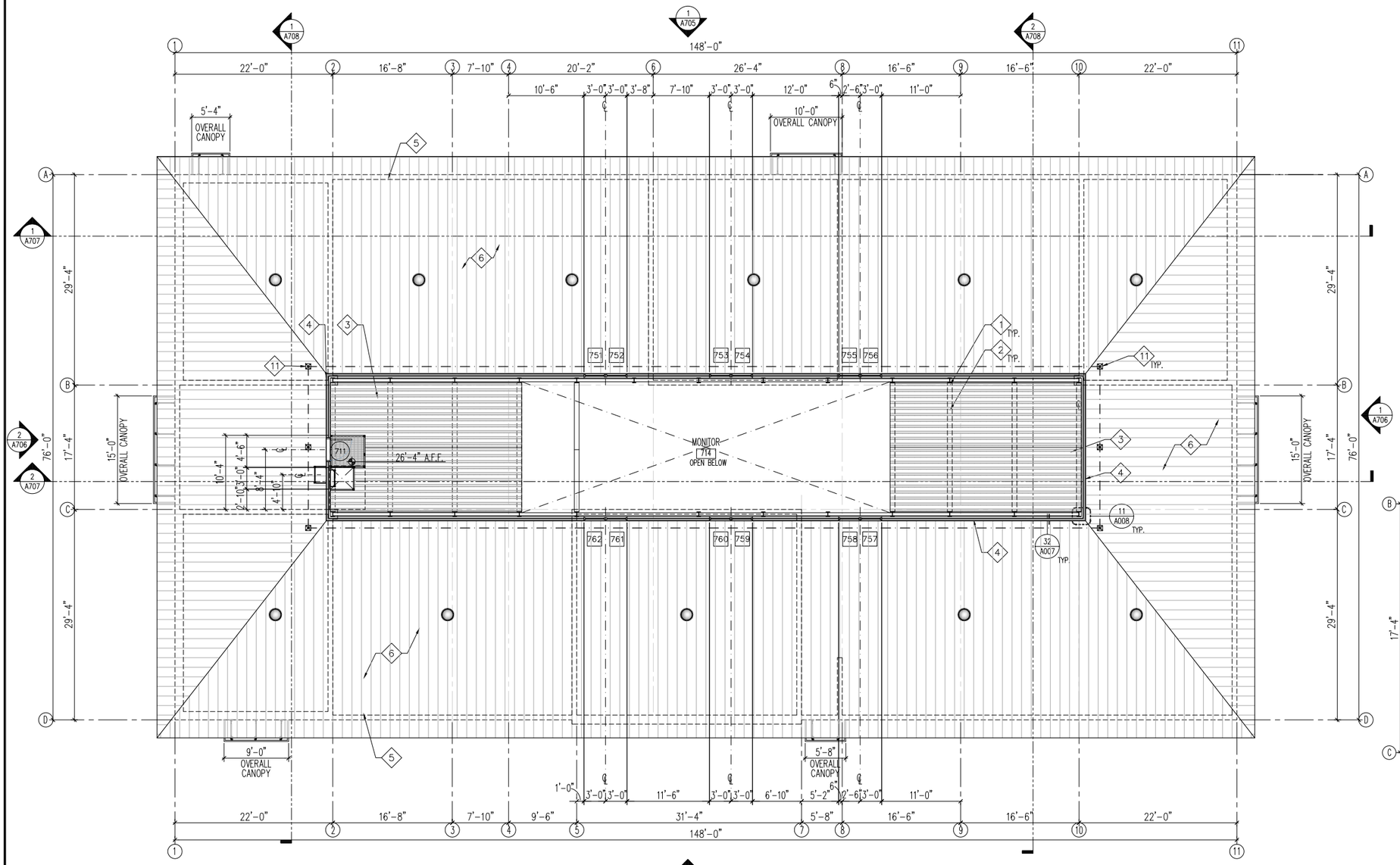

MONITOR PLAN
SCALE: 1/8" = 1'-0"

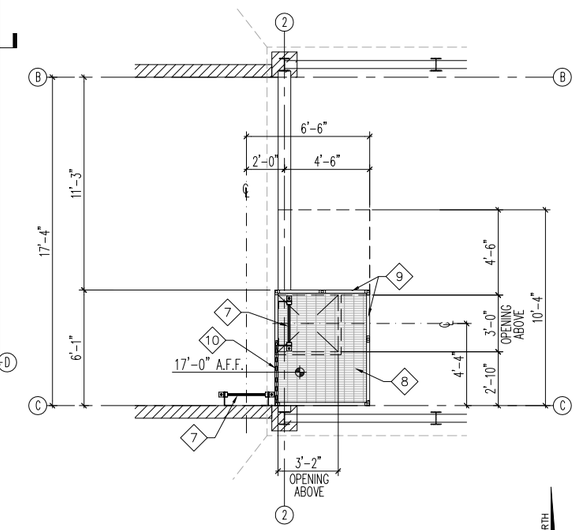

PLATFORM PLAN
SCALE: 1/4" = 1'-0"

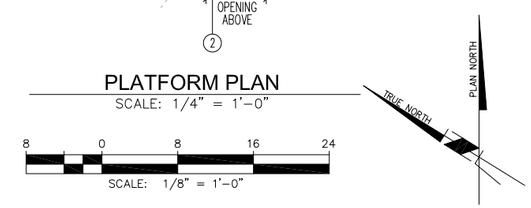

SCALE: 1/8" = 1'-0"

FILENAME: A702 F02 Monitor Plan.dwg
LAST UPDATED: 2/1/2012 11:13am
LAST SAVED BY: rcstensby

No.	DATE	REVISIONS	APPROVED

DESIGNED: RBF
DRAWN: rcs
CHECKED: wdg

RBF CONSULTING

carollo

IRVINE RANCH WATER DISTRICT

WILLIAM D. GRAEBER	CA LIC NO. C11052	ARCHITECT	DATE
CINDY MILLER	RCE NO. 58116	PROJECT MANAGER	DATE
PATRICIA UEMATSU	RCE NO. 36762	PRINCIPAL ENGINEER	DATE

STATE OF CALIFORNIA WILLIAM D. GRAEBER #C11052 EXPIRES 5/31/2013 REGISTERED ARCHITECT

IRVINE RANCH WATER DISTRICT
BAKER WATER TREATMENT PLANT
PROJECT NO. 11218

CHEMICAL BUILDING
MONITOR FLOOR PLAN

DRAWING
A702
SHEET
161 OF 632

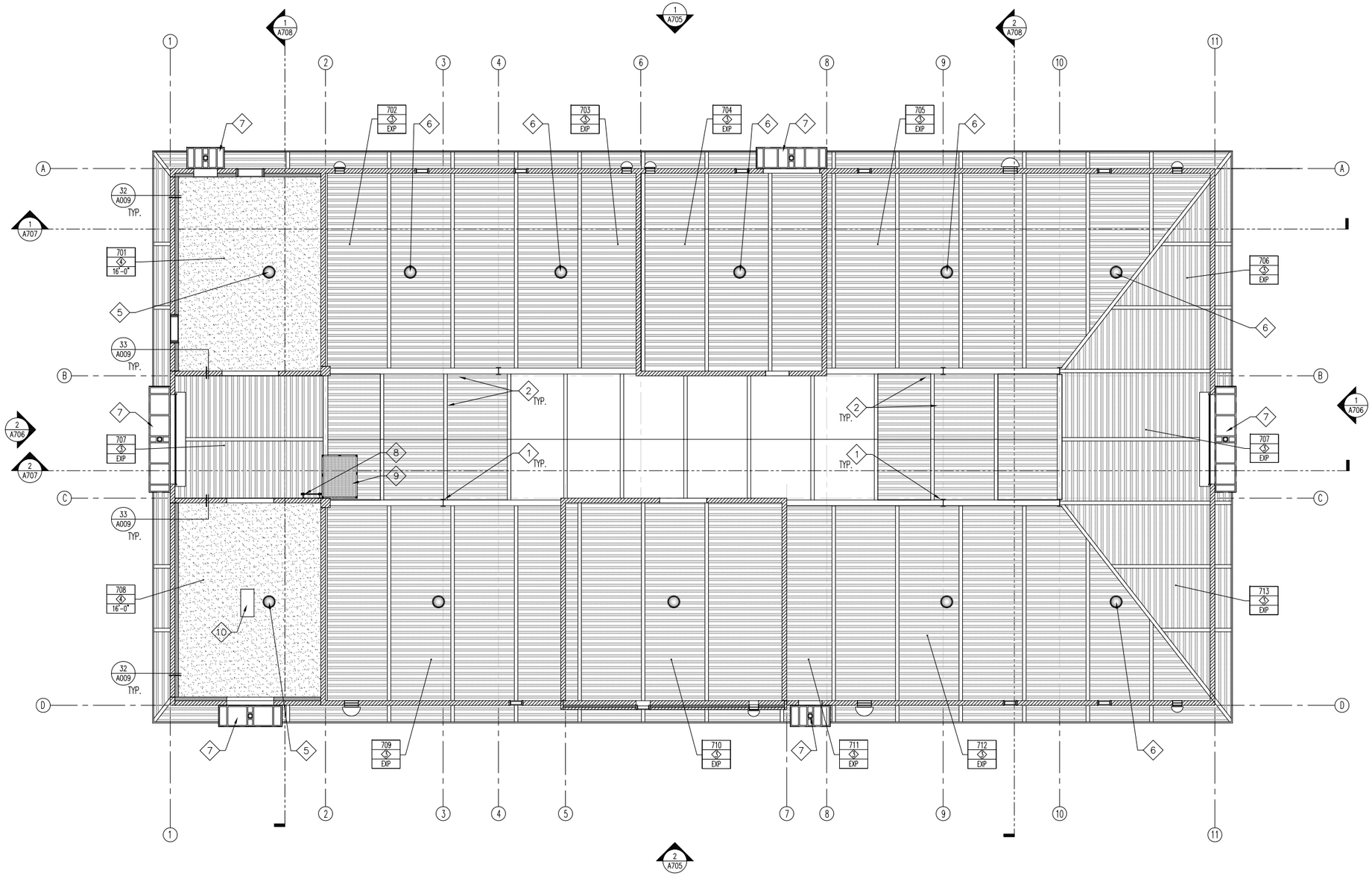

REFLECTED CEILING PLAN

SCALE: 1/8" = 1'-0"

NOTES

1. REFER TO GENERAL ARCHITECTURAL NOTES FOR ADDITIONAL INFORMATION AND REQUIREMENTS.
2. WHERE NO CONSTRUCTION DETAILS ARE SHOWN OR NOTED FOR ANY PART OF THE WORK, DETAILS SHALL BE THE SAME AS FOR OTHER SIMILAR WORK.
3. COORDINATE ALL UTILITY CONNECTION PRIOR TO EXECUTION OF THIS WORK.

KEY NOTES

1. STRUCTURAL COLUMN, REFER TO STRUCTURAL DRAWINGS FOR ADDITIONAL INFORMATION.
2. STRUCTURAL MEMBER, REFER TO STRUCTURAL DRAWINGS FOR ADDITIONAL INFORMATION.
3. STRUCTURAL DECKING, REFER TO STRUCTURAL DRAWINGS FOR ADDITIONAL INFORMATION.
4. SUSPENDED GYPSUM BOARD CEILING SYSTEM. REFER TO DETAILS 32 AND 33/A009.
5. TUBULAR DAYLIGHT DEVICE AT GYPSUM BOARD CEILING SYSTEM. SEE DETAIL 42 AND 43/A009 FOR ADDITIONAL INFORMATION.
6. TUBULAR DAYLIGHT DEVICE AT OPEN CEILING. SEE DETAIL 41/A009 FOR ADDITIONAL INFORMATION.
7. CANOPY. REFER TO DETAILS 12, AND 13/A008 FOR ADDITIONAL INFORMATION.
8. ROOF ACCESS LADDER.
9. FIBERGLASS PLATFORM.
10. MECHANICAL EQUIPMENT. REFER TO MECHANICAL DRAWINGS FOR ADDITIONAL INFORMATION.

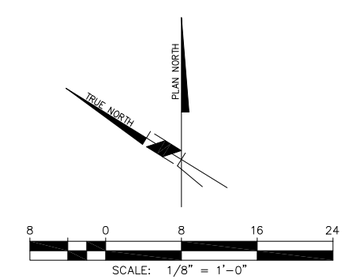

FILENAME: A703 RCP.dwg
LAST UPDATED: 2/1/2012 11:13am
LAST SAVED BY: rcstensby

No.	DATE	REVISIONS	APPROVED

DESIGNED: RBF
DRAWN: rcs
CHECKED: wdg

RBF CONSULTING

carollo

IRVINE RANCH WATER DISTRICT

WILLIAM D. GRAEBER	CA LIC NO. C11052	ARCHITECT	DATE
CINDY MILLER	RCE NO. 58116	PROJECT MANAGER	DATE
PATRICIA UEMATSU	RCE NO. 36762	PRINCIPAL ENGINEER	DATE

STATE OF CALIFORNIA WILLIAM GRAEBER #C11052 EXPIRES 5/31/2013 REGISTERED ARCHITECT

IRVINE RANCH WATER DISTRICT
BAKER WATER TREATMENT PLANT
PROJECT NO. 11218

CHEMICAL BUILDING
REFLECTED CEILING PLAN

DRAWING A703

SHEET 162 OF 632

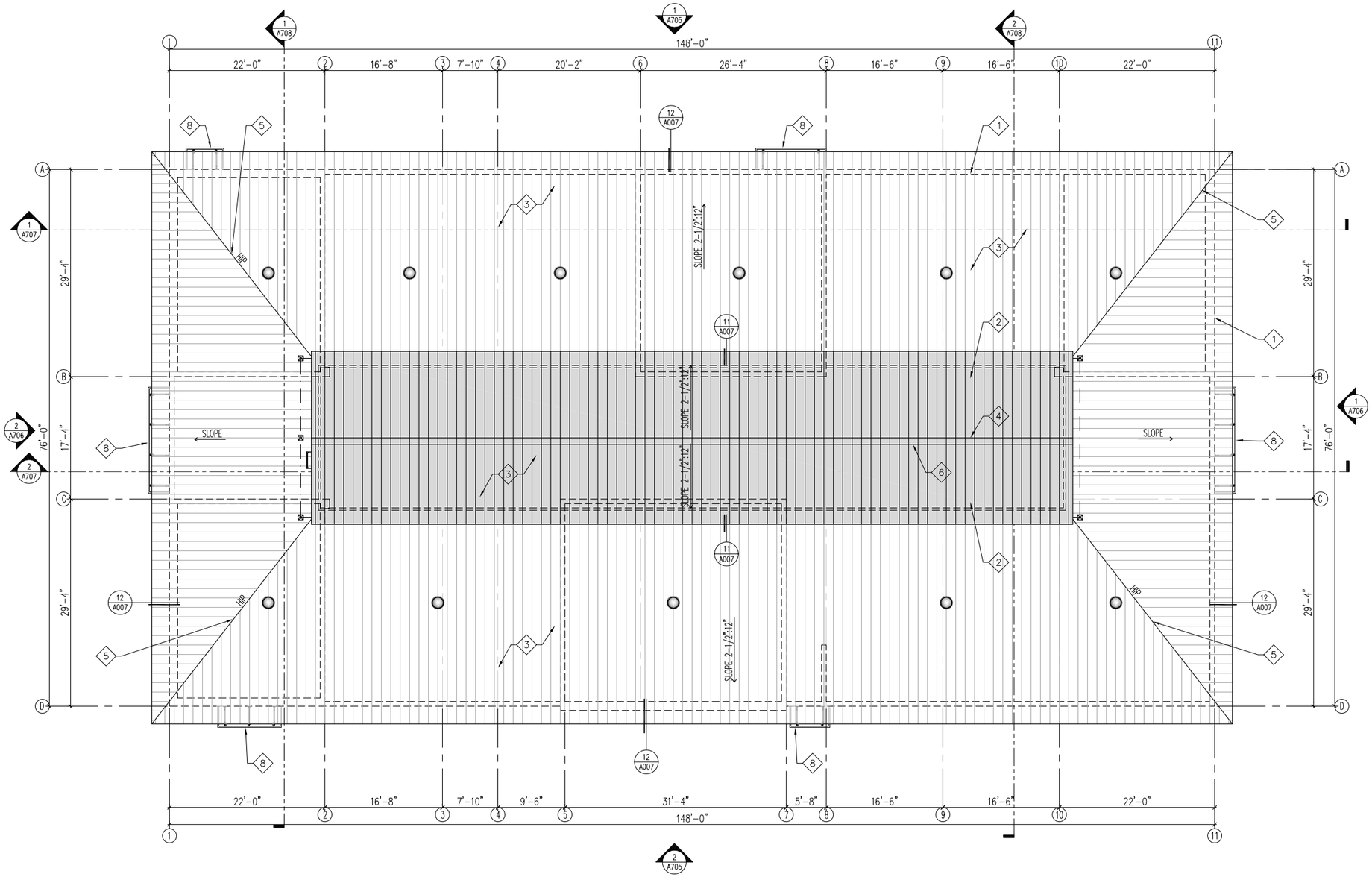

ROOF PLAN

SCALE: 1/8" = 1'-0"

NOTES

1. REFER TO GENERAL ARCHITECTURAL NOTES FOR ADDITIONAL INFORMATION AND REQUIREMENTS.
2. WHERE NO CONSTRUCTION DETAILS ARE SHOWN OR NOTED FOR ANY PART OF THE WORK, DETAILS SHALL BE THE SAME AS FOR OTHER SIMILAR WORK.
3. COORDINATE ALL UTILITY CONNECTION PRIOR TO EXECUTION OF THIS WORK.

KEY NOTES

1. LINE OF BUILDING STRUCTURE BELOW.
2. LINE OF MONITOR WALL BELOW.
3. STANDING SEAM METAL ROOFING OVER UNDERLAYMENT OVER OSB/POLYISOCYANURATE RIGID INSULATION OVER VAPOR BARRIER OVER STRUCTURAL ROOF DECK.
4. PRE-FINISHED SHEET METAL RIDGE CAP, MATCH STANDING SEAM METAL ROOF COLOR.
5. PRE-FINISHED SHEET METAL HIP CAP, MATCH STANDING SEAM METAL ROOF COLOR.
6. HORIZONTAL RIDGE FALL ARREST TRACK.
7. TUBULAR DAYLIGHT DEVICE AND ROOF FLASHING ASSEMBLY, CENTER ON STANDING SEAM OF METAL ROOFING SYSTEM. SEE DETAIL 33/A006 FOR ADDITIONAL INFORMATION.
8. CANOPY BELOW. REFER TO DETAILS 12/A008 & 13/A008 FOR ADDITIONAL INFORMATION.

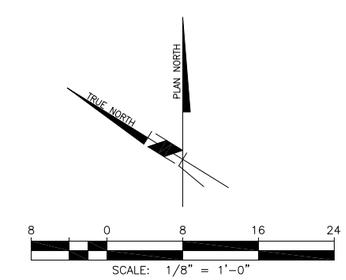

FILENAME: A704 Roof Plan.dwg
LAST UPDATED: 2/1/2012 11:14am
LAST SAVED BY: rcstensby

No.	DATE	REVISIONS	APPROVED

DESIGNED: RBF
DRAWN: rcs
CHECKED: wdg

RBF CONSULTING

carollo

IRVINE RANCH WATER DISTRICT

WILLIAM D. GRAEBER	CA LIC NO. C11052	ARCHITECT	DATE
CINDY MILLER	RCE NO. 58116	PROJECT MANAGER	DATE
PATRICIA UEMATSU	RCE NO. 36762	PRINCIPAL ENGINEER	DATE

STATE OF CALIFORNIA WILLIAM D. GRAEBER #C11052 EXPIRES 5/31/2013 REGISTERED ARCHITECT

IRVINE RANCH WATER DISTRICT
BAKER WATER TREATMENT PLANT
PROJECT NO. 11218

CHEMICAL BUILDING ROOF PLAN

DRAWING A704

SHEET 163 OF 632

NOTES

1. REFER TO GENERAL ARCHITECTURAL NOTES FOR ADDITIONAL INFORMATION AND REQUIREMENTS.
2. WHERE NO CONSTRUCTION DETAILS ARE SHOWN OR NOTED FOR ANY PART OF THE WORK, DETAILS SHALL BE THE SAME AS FOR OTHER SIMILAR WORK.
3. COORDINATE ALL UTILITY CONNECTION PRIOR TO EXECUTION OF THIS WORK.
4. SEE DOOR AND OPENING SCHEDULE IN DRAWING A709.

KEY NOTES

1. CONCRETE MASONRY UNIT WALL. REFER TO DETAIL 3/A705 FOR CMU WALL PATTERN, COLOR AND TEXTURE. REFER TO STRUCTURAL DRAWINGS FOR ADDITIONAL INFORMATION.
2. ROOFTOP MOUNTED SAFETY LINE ANCHORAGE POST.
3. ROOF ACCESS LADDER.
4. STANDING SEAM METAL ROOFING OVER UNDERLAYMENT OVER OSB/POLYISOCYANURATE RIGID INSULATION OVER VAPOR BARRIER OVER STRUCTURAL ROOF DECK.
5. 4 INCH WIDE CONCRETE MASONRY VENEER OVER INSULATION. REFER TO DETAIL 3/A705 FOR COLOR / TEXTURE PATTERNS. REFER TO STRUCTURAL DRAWINGS FOR ADDITIONAL INFORMATION.
6. ROOFTOP SAFETY LINE CABLE.
7. ROOFTOP ACCESS DOOR.
8. METAL CANOPY. REFER TO DETAILS 12/A008 AND 13/A008 FOR ADDITIONAL INFORMATION.
9. PRE-FINISHED METAL WALL PANEL ASSEMBLY. SEE DETAIL # 11/A008 FOR ADDITIONAL INFORMATION.
10. TUBULAR DAYLIGHT DEVICE AND ROOF FLASHING ASSEMBLY, CENTER ON STANDING SEAM METAL ROOFING SYSTEM. SEE DETAIL # 21/A010 FOR ADDITIONAL INFORMATION.
11. WALL OPENING FOR WALL LOUVER. REFER TO MECHANICAL DRAWINGS FOR ADDITIONAL INFORMATION.
12. WALL OPENING FOR EXHAUST FAN. REFER TO MECHANICAL DRAWINGS FOR ADDITIONAL INFORMATION.
13. WALL OPENING FOR WALL GLAZING. REFER TO OPENING SCHEDULE SHEET A709 FOR ADDITIONAL INFORMATION.
14. HORIZONTAL RIDGE FALL ARREST TRACK.

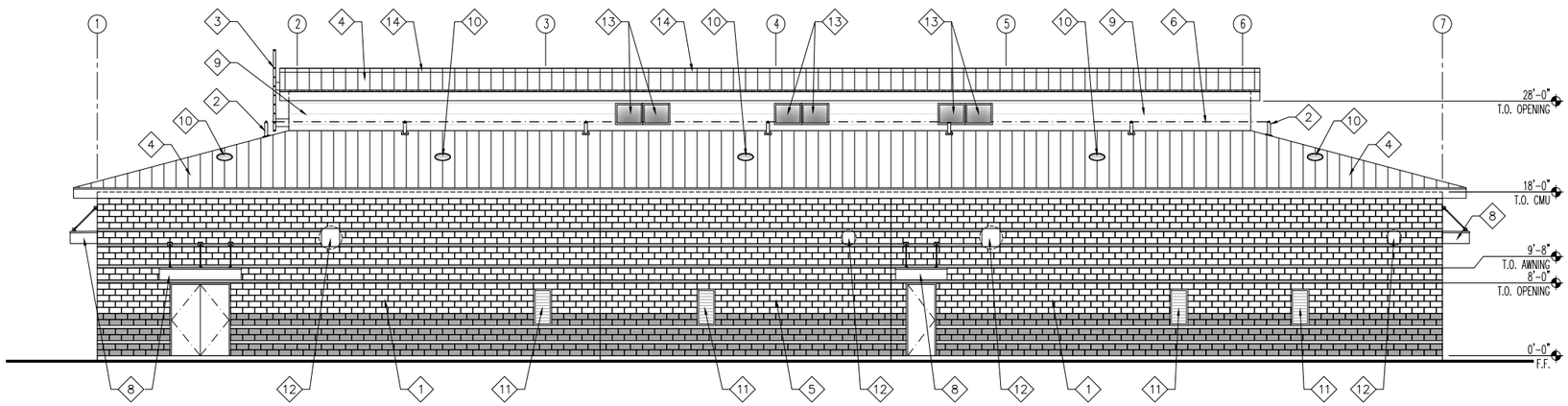

SOUTH EXTERIOR ELEVATION (2/A701)
SCALE: 1/8" = 1'-0"

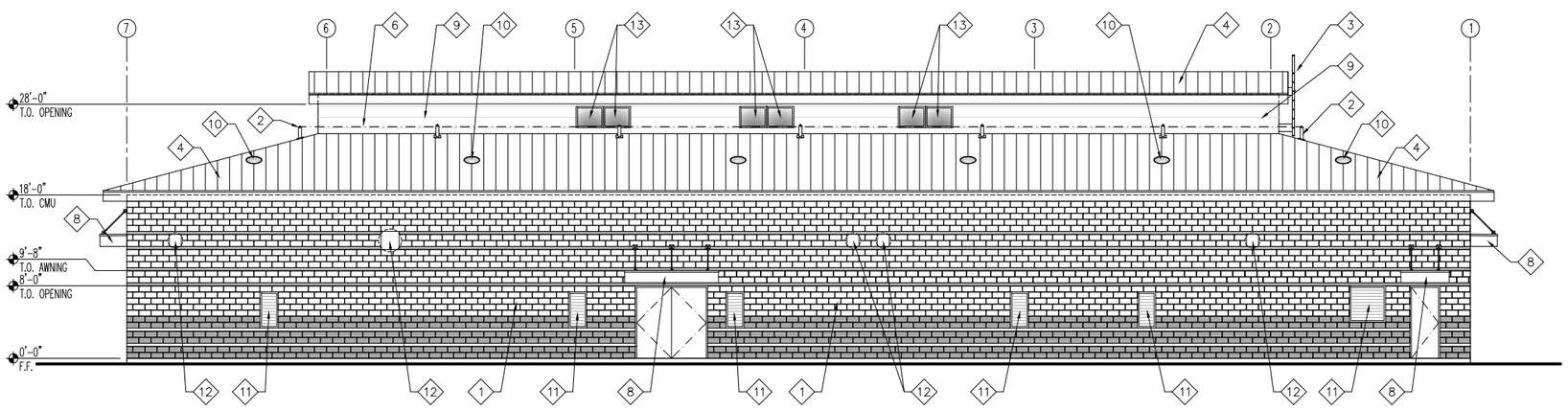

NORTH EXTRIOR ELEVATION (1/A701)
SCALE: 1/8" = 1'-0"

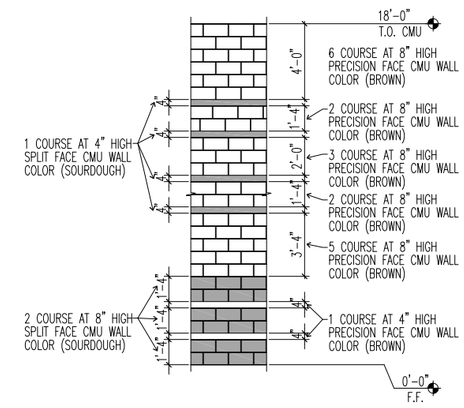

CMU WALL PATTERN (3/A705)
SCALE: 1/4" = 1'-0"

8 0 8 16 24
SCALE: 1/8" = 1'-0"

FILENAME: A705 Exterior Elevations I.dwg
LAST UPDATED: 2/1/2012 11:14am
LAST SAVED BY: rcstensby

No.	DATE	REVISIONS	APPROVED

DESIGNED: RBF
DRAWN: rcs
CHECKED: wdg

RBF CONSULTING
carollo
IRVINE RANCH WATER DISTRICT

WILLIAM D. GRAEBER	CA LIC NO. C11052	ARCHITECT	DATE
CINDY MILLER	RCE NO. 58116	PROJECT MANAGER	DATE
PATRICIA UEMATSU	RCE NO. 36762	PRINCIPAL ENGINEER	DATE

STATE OF CALIFORNIA WILLIAM D. GRAEBER #C11052 EXPIRES 5/31/2013 RE REGISTERED ARCHITECT

IRVINE RANCH WATER DISTRICT
BAKER WATER TREATMENT PLANT
PROJECT NO. 11218

CHEMICAL BUILDING
EXTERIOR ELEVATIONS I

DRAWING A705
SHEET 164 OF 632

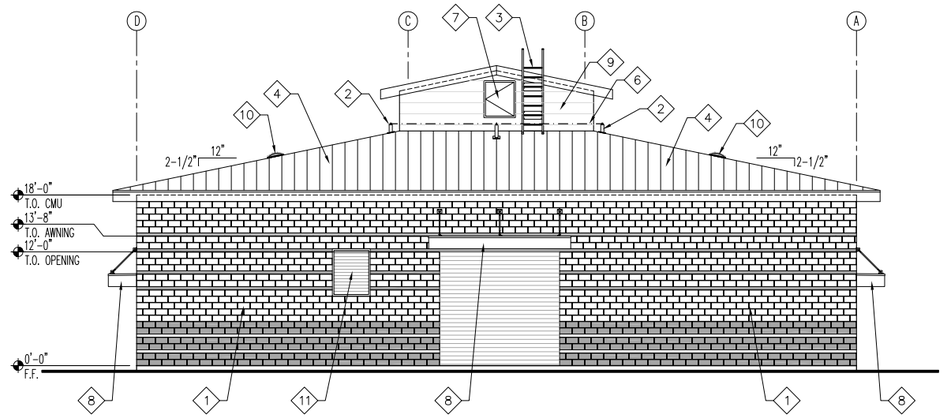

WEST EXTERIOR ELEVATION (2 / A701)

SCALE: 1/8" = 1'-0"

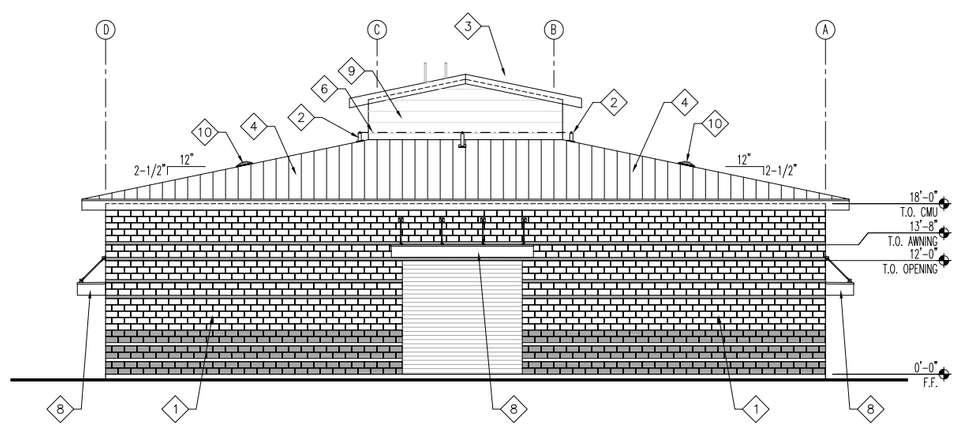

EAST EXTRIOR ELEVATION (1 / A701)

SCALE: 1/8" = 1'-0"

NOTES

1. REFER TO GENERAL ARCHITECTURAL NOTES FOR ADDITIONAL INFORMATION AND REQUIREMENTS.
2. WHERE NO CONSTRUCTION DETAILS ARE SHOWN OR NOTED FOR ANY PART OF THE WORK, DETAILS SHALL BE THE SAME AS FOR OTHER SIMILAR WORK.
3. COORDINATE ALL UTILITY CONNECTION PRIOR TO EXECUTION OF THIS WORK.
4. SEE DOOR AND OPENING SCHEDULE IN DRAWING A709.

KEY NOTES

1. CONCRETE MASONRY UNIT WALL. REFER TO DETAIL 3/A705 FOR CMU WALL PATTERN, COLOR AND TEXTURE. REFER TO STRUCTURAL DRAWINGS FOR ADDITIONAL INFORMATION.
2. ROOFTOP MOUNTED SAFETY LINE ANCHORAGE POST.
3. ROOF ACCESS LADDER.
4. STANDING SEAM METAL ROOFING OVER UNDERLAYMENT OVER OSB/POLYISOCYANURATE RIGID INSULATION OVER VAPOR BARRIER OVER STRUCTURAL ROOF DECK.
5. 4 INCH WIDE CONCRETE MASONRY VENEER OVER INSULATION. REFER TO DETAIL 3/A705 FOR COLOR / TEXTURE PATTERNS. REFER TO STRUCTURAL DRAWINGS FOR ADDITIONAL INFORMATION.
6. ROOFTOP SAFETY LINE CABLE.
7. ROOFTOP ACCESS DOOR.
8. METAL CANOPY. REFER TO DETAILS 12/A008 AND 13/A008 FOR ADDITIONAL INFORMATION.
9. PRE-FINISHED METAL WALL PANEL ASSEMBLY. SEE DETAIL # 11/A008 FOR ADDITIONAL INFORMATION.
10. TUBULAR DAYLIGHT DEVICE AND ROOF FLASHING ASSEMBLY, CENTER ON STANDING SEAM METAL ROOFING SYSTEM. SEE DETAIL # 21/A010 FOR ADDITIONAL INFORMATION.
11. WALL OPENING FOR WALL LOUVER. REFER TO MECHANICAL DRAWINGS FOR ADDITIONAL INFORMATION.
12. WALL OPENING FOR EXHAUST FAN. REFER TO MECHANICAL DRAWINGS FOR ADDITIONAL INFORMATION.
13. WALL OPENING FOR WALL GLAZING. REFER TO OPENING SCHEDULE SHEET A709 FOR ADDITIONAL INFORMATION.

8 0 8 16 24

SCALE: 1/8" = 1'-0"

FILENAME: A706 Exterior Elevations II.dwg

LAST UPDATED: 2/1/2012 11:14am

LAST SAVED BY: rcstensby

No.	DATE	REVISIONS	APPROVED

DESIGNED: RBF

DRAWN: rcs

CHECKED: wdg

RBF CONSULTING

carollo

IRVINE RANCH WATER DISTRICT

WILLIAM D. GRAEBER	CA LIC NO. C11052	ARCHITECT	DATE
CINDY MILLER	RCE NO. 58116	PROJECT MANAGER	DATE
PATRICIA UEMATSU	RCE NO. 36762	PRINCIPAL ENGINEER	DATE

STATE OF CALIFORNIA WILLIAM D. GRAEBER #C11052 EXPIRES 6/30/2013 REGISTERED ARCHITECT

IRVINE RANCH WATER DISTRICT
BAKER WATER TREATMENT PLANT
PROJECT NO. 11218

CHEMICAL BUILDING
EXTERIOR ELEVATIONS II

DRAWING A706

SHEET 165 OF 632

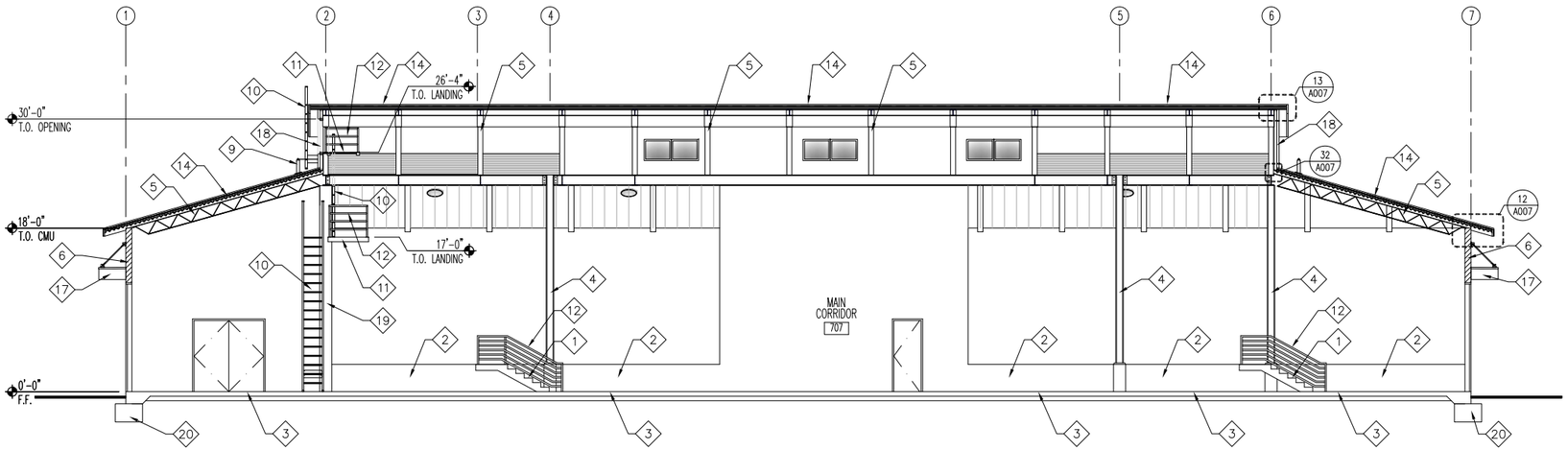

BUILDING SECTION
SCALE: 1/8" = 1'-0"
2 A701

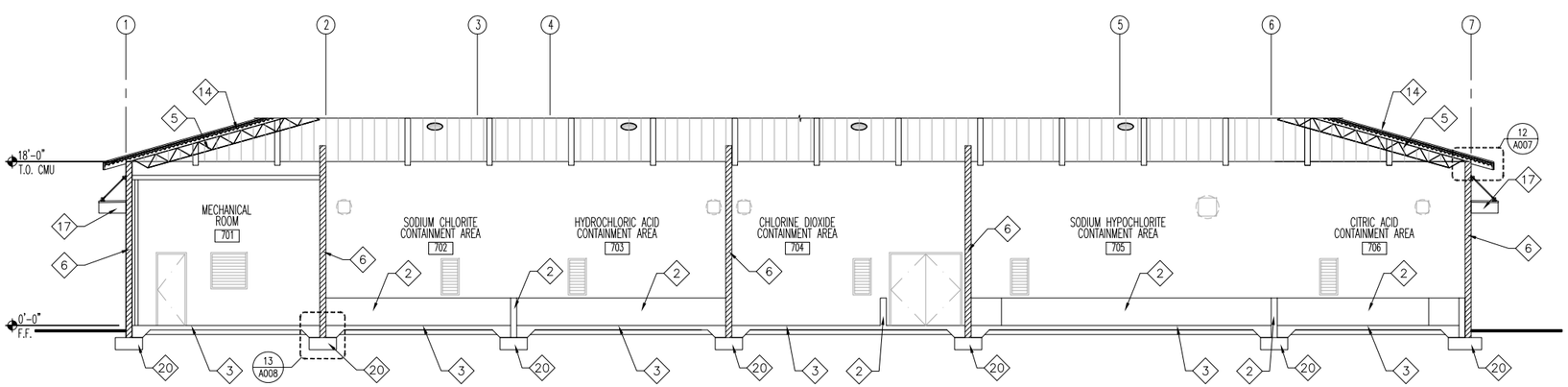

BUILDING SECTION
SCALE: 1/8" = 1'-0"
1 A701

NOTES

1. REFER TO GENERAL ARCHITECTURAL NOTES FOR ADDITIONAL INFORMATION AND REQUIREMENTS.
2. WHERE NO CONSTRUCTION DETAILS ARE SHOWN OR NOTED FOR ANY PART OF THE WORK, DETAILS SHALL BE THE SAME AS FOR OTHER SIMILAR WORK.
3. COORDINATE ALL UTILITY CONNECTION PRIOR TO EXECUTION OF THIS WORK.
4. SEE DOOR AND OPENING SCHEDULE IN DRAWING A709.

KEY NOTES

1. REMOVABLE FIBERGLASS STAIR ASSEMBLY, HANDRAIL AND GUARDRAIL ASSEMBLY. REFER TO STRUCTURAL DRAWINGS FOR ADDITIONAL INFORMATION.
2. SEALED CONCRETE CONTAINMENT WALL, REFER TO STRUCTURAL DRAWINGS FOR ADDITIONAL INFORMATION.
3. SEALED CONCRETE FLOOR SLAB, REFER TO STRUCTURAL DRAWINGS FOR ADDITIONAL INFORMATION.
4. STRUCTURAL COLUMN, REFER TO STRUCTURAL DRAWINGS FOR ADDITIONAL INFORMATION.
5. STRUCTURAL MEMBER, REFER TO STRUCTURAL DRAWINGS FOR ADDITIONAL INFORMATION.
6. 8 INCH WIDE CONCRETE MASONRY UNIT WALL. REFER TO EXTERIOR ELEVATION FOR COLOR / TEXTURE PATTERNS. REFER TO STRUCTURAL DRAWINGS FOR ADDITIONAL INFORMATION.
7. METAL STUD WALL FURRING WITH GYPSUM WALLBOARD FINISH.
8. R-13 THERMAL INSULATION IN WALL CAVITY, FLOOR TO UNDERSIDE OF STRUCTURE ABOVE.
9. ROOFTOP MOUNTED SAFETY LINE TIE-OFF POST.
10. ROOF ACCESS LADDER.
11. FIBERGLASS PLATFORM.
12. ALUMINUM GUARDRAIL.
13. NOT USED.
14. STANDING SEAM METAL ROOFING OVER UNDERLAYMENT OVER OSB/POLYISOCYANURATE RIGID INSULATION OVER VAPOR BARRIER OVER STRUCTURAL ROOF DECK.
15. PRE-FINISHED SHEET METAL RIDGE CAP, MATCH STANDING SEAM METAL ROOF COLOR.
16. NOT USED.
17. METAL CANOPY. SEE DETAIL # 32/ A009 & 33/ A009 FOR ADDITIONAL INFORMATION.
18. PRE-FINISHED METAL WALL PANEL ASSEMBLY. SEE DETAIL 11/A008 FOR ADDITIONAL INFORMATION.
19. CONCRETE MASONRY UNIT PILASTER, REFER TO STRUCTURAL DRAWINGS FOR ADDITIONAL INFORMATION.
20. CONCRETE FOUNDATION SYSTEM, REFER TO STRUCTURAL DRAWINGS FOR ADDITIONAL INFORMATION.

8 0 8 16 24
SCALE: 1/8" = 1'-0"

FILENAME: A707 Building Sections I.dwg
LAST UPDATED: 2/1/2012 11:14am
LAST SAVED BY: rcstensby

No.	DATE	REVISIONS	APPROVED

DESIGNED: RBF
DRAWN: rcs
CHECKED: wdg

RBF CONSULTING

carollo

IRVINE RANCH WATER DISTRICT

WILLIAM D. GRAEBER	CA LIC NO. C11052	ARCHITECT	DATE
CINDY MILLER	RCE NO. 58116	PROJECT MANAGER	DATE
PATRICIA UEMATSU	RCE NO. 36762	PRINCIPAL ENGINEER	DATE

STATE OF CALIFORNIA WILLIAM D. GRAEBER #C11052 EXPIRES 6/30/2013 REGISTERED ARCHITECT

IRVINE RANCH WATER DISTRICT
BAKER WATER TREATMENT PLANT
PROJECT NO. 11218

CHEMICAL BUILDING SECTIONS I

DRAWING A707

NOTES

1. REFER TO GENERAL ARCHITECTURAL NOTES FOR ADDITIONAL INFORMATION AND REQUIREMENTS.
2. WHERE NO CONSTRUCTION DETAILS ARE SHOWN OR NOTED FOR ANY PART OF THE WORK, DETAILS SHALL BE THE SAME AS FOR OTHER SIMILAR WORK.
3. COORDINATE ALL UTILITY CONNECTION PRIOR TO EXECUTION OF THIS WORK.
4. SEE DOOR AND OPENING SCHEDULE IN DRAWING A709.

KEY NOTES

1. REMOVABLE FIBERGLASS STAIR ASSEMBLY, HANDRAIL AND GUARDRAIL ASSEMBLY. REFER TO STRUCTURAL DRAWINGS FOR ADDITIONAL INFORMATION.
2. SEALED CONCRETE CONTAINMENT WALL, REFER TO STRUCTURAL DRAWINGS FOR ADDITIONAL INFORMATION.
3. SEALED CONCRETE FLOOR SLAB, REFER TO STRUCTURAL DRAWINGS FOR ADDITIONAL INFORMATION.
4. STRUCTURAL COLUMN, REFER TO STRUCTURAL DRAWINGS FOR ADDITIONAL INFORMATION.
5. STRUCTURAL MEMBER, REFER TO STRUCTURAL DRAWINGS FOR ADDITIONAL INFORMATION.
6. 8 INCH WIDE CONCRETE MASONRY UNIT WALL. REFER TO EXTERIOR ELEVATION FOR COLOR / TEXTURE PATTERNS. REFER TO STRUCTURAL DRAWINGS FOR ADDITIONAL INFORMATION.
7. METAL STUD WALL FURRING WITH GYPSUM WALLBOARD FINISH.
8. R-13 THERMAL INSULATION IN WALL CAVITY, FLOOR TO UNDERSIDE OF STRUCTURE ABOVE.
9. ROOFTOP MOUNTED SAFETY LINE TIE-OFF POST.
10. ROOF ACCESS LADDER.
11. FIBERGLASS PLATFORM.
12. ALUMINUM GUARDRAIL.
13. NOT USED.
14. STANDING SEAM METAL ROOFING OVER UNDERLAYMENT OVER OSB/POLYISOCYANURATE RIGID INSULATION OVER VAPOR BARRIER OVER STRUCTURAL ROOF DECK.
15. PRE-FINISHED SHEET METAL RIDGE CAP, MATCH STANDING SEAM METAL ROOF COLOR.
16. NOT USED.
17. METAL CANOPY. SEE DETAIL # 32/ A009 & 33/ A009 FOR ADDITIONAL INFORMATION.
18. PRE-FINISHED METAL WALL PANEL ASSEMBLY. SEE DETAIL 11/A008 FOR ADDITIONAL INFORMATION.
19. CONCRETE MASONRY UNIT PILASTER, REFER TO STRUCTURAL DRAWINGS FOR ADDITIONAL INFORMATION.
20. CONCRETE FOUNDATION SYSTEM, REFER TO STRUCTURAL DRAWINGS FOR ADDITIONAL INFORMATION.

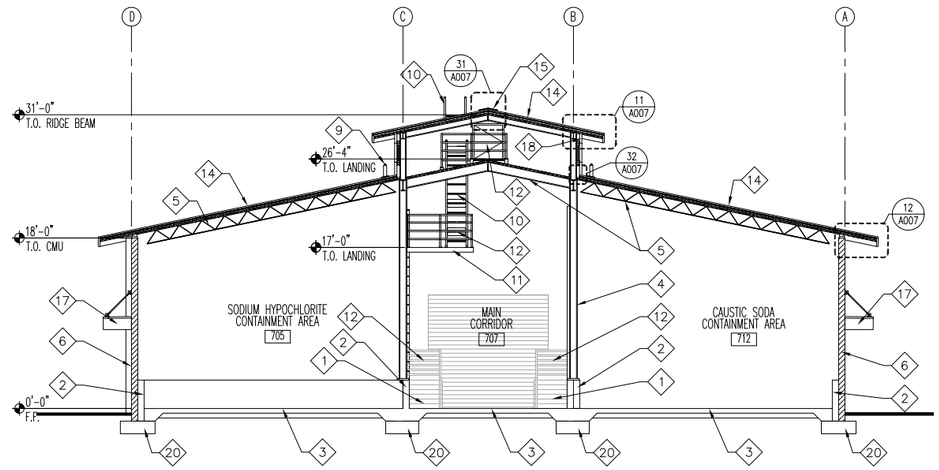

BUILDING SECTION 2/A701
SCALE: 1/8" = 1'-0"

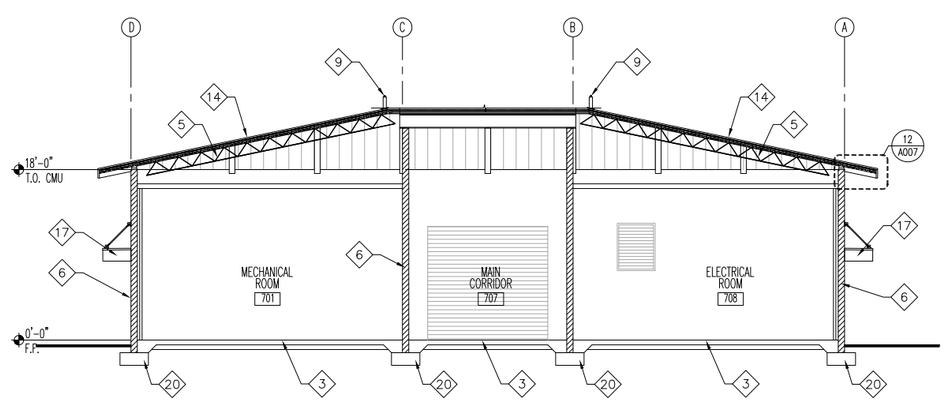

BUILDING SECTION 1/A701
SCALE: 1/8" = 1'-0"

8 0 8 16 24
SCALE: 1/8" = 1'-0"

FILENAME: A708 Building Sections II.dwg LAST UPDATED: 2/1/2012 11:14am LAST SAVED BY: rcstensby

No.	DATE	REVISIONS	APPROVED

DESIGNED: RBF
DRAWN: rcs
CHECKED: wdg

RBF CONSULTING

carollo

Joint Powers Authority IRVINE RANCH WATER DISTRICT

WILLIAM D. GRAEBER	CA LIC NO. C11052	ARCHITECT	DATE
CINDY MILLER	RCE NO. 58116	PROJECT MANAGER	DATE
PATRICIA UEMATSU	RCE NO. 36762	PRINCIPAL ENGINEER	DATE

STATE OF CALIFORNIA WILLIAM GRAEBER #C11052 EXPIRES 6/31/2013 REGISTERED ARCHITECT

IRVINE RANCH WATER DISTRICT
BAKER WATER TREATMENT PLANT
PROJECT NO. 11218

CHEMICAL BUILDING
BUILDING AND WALL SECTIONS II

DRAWING A708

SHEET 167 OF 632

LEGEND

MATERIALS:

FLOOR
- FL1 CONCRETE
- FL2 VINYL COMP.TILE
- FL3 SHEET VINYL
- FL4 CERAMIC TILE
- FL5 CARPET TILE
- FL6 STEEL GRATE

BASE
- B1 TOP SET – RUBBER
- B2 CERAMIC TILE BASE
- B3 CONCRETE CURB 12" HIGH

WALL
- W1 GYP. BD.
- W2 W.R. GYP. BD.
- W3 METAL WALL PANEL
- W4 CONCRETE MASONRY UNITS
- W5 CONCRETE
- W6 CERAMIC TILE
- W7 FRP PANEL FULL HEIGHT
- W8 FRP PANELS AT 6'–0" WAINSCOT HEIGHT

CEILING
- C1 GYP. BD.
- C2 F.R. GYP. BD.
- C3 EXPOSED CONSTRUCTION
- C4 2' x 4' LAY–IN ACOUSTIC CEILING PANELS
- C5 FULL ROOM ACOUSTIC INSULATION ABOVE FINISH CEILING

DOOR
- D1 WOOD
- D2 HOLLOW METAL
- D3 ALUMINUM
- D4 GLASS
- D5 STEEL

DOOR FRAME
- DF1 WOOD
- DF2 HOLLOW METAL
- DF3 STEEL
- DF4 ALUMINUM

CORE/GLASS
- CG1 HOLLOW
- CG2 SOLID
- CG3 GLASS
- CG4 WOOD & TEMP. GLASS
- CG5 RIGID INSULATION
- CG6 GLASS BLOCK

WINDOW
- WW1 WOOD

WINDOW FRAME
- WF1 WOOD
- WF2 ALUM.
- WF3 HOLLOW METAL

LOUVER
- L1 PRE–FINISH LOUVER ASSEMBLY

FINISHES:

- F1 FACTORY FINISH
- F2 GLAZED
- F3 STAIN (PREFINISHED)
- F4 PRIMED & PAINTED
- F5 SEALED CONCRETE
- F6 STAINED AND SEALED
- F7 FACTORY FINISH T–BAR
- F8 EXPOSED CONSTRUCTION
- F9 WATER REPELLANT COATING

DOOR & OPENING NOTES

1. PROVIDE FULL WEATHERSTRIPPING PERIMETER OF FRAME.
2. PROVIDE OVERHEAD DOOR CLOSER.
3. PROVIDE PANIC HARDWARE AT ACTIVE LEAF.
4. PROVIDE COORDINATOR ASTRAL AND SEALS.
5. PROVIDE DOOR STOP.
6. ALL DOORS & FRAME TO BE "MAXIMUM DUTY" MODEL 2 SEAMLESS.
7. ACCESS CONTROL SYSTEM READER/KEYPAD & DOOR RELEASE.
8. PROVIDE INSECT SCREEN AT INTERIOR SIDE OF LOUVER PANELS.
9. PROVIDE DOOR BOTTOM SEAL(S).
10. DUAL GLAZED WINDOW IN WINDOW FRAME.
11. NOT USED.
12. PROVIDE DOOR SIGNAGE AS REQUIRED PER 13/A002.
13. ALL EXIT DOORS SHALL BE OPERABLE FROM THE INSIDE WITHOUT KEY OR SPECIAL KNOWLEDGE OR EFFORT. ANY LOCKS ON EXIT DOORS MUST BE RELEASED BY NORMAL OPERATION FROM THE INSIDE WITHOUT KEY OR SPECIAL KNOWLEDGE OR EFFORT (EXIT HANDLES OR PANIC BARS MUST RELEASE LOCKS) PER SECTION 1003.0.1.8.

ROOM FINISH SCHEDULE

ROOM NO.	ROOM NAME	FLOOR		BASE		WALLS								CEILING			REMARKS
						NORTH		EAST		SOUTH		WEST					
		MATL.	FIN.	MATL.	FIN.	MATL.	FIN.	MATL.	FIN.	MATL.	FIN.	MATL.	FIN.	MATL.	FIN.	HEIGHT	
701	MECHANICAL ROOM	FL1	F5	–	–	W4	F9	W4	F9	W4	F9	W4	F9	C3	F9	VARIES	–
702	SODIUM CHLORITE CONTAINMENT AREA	FL1	F5	–	–	W4	F9	W4	F9	W4	F9	W4	F9	C3	F9	VARIES	–
703	HYDROCHLORIC ACID CONTAINMENT AREA	FL1	F5	–	–	W4	F9	W4	F9	W4	F9	W4	F9	C3	F9	VARIES	–
704	CHLORINE DIOXIDE ROOM	FL1	F5	–	–	W4	F9	W4	F9	W4	F9	W4	F9	C3	F9	VARIES	–
705	SODIUM HYPOCHLORITE CONTAINMENT AREA	FL1	F5	–	–	W4	F9	W4	F9	W4	F9	W4	F9	C3	F9	VARIES	–
706	CITRIC ACID CONTAINMENT AREA	FL1	F5	–	–	W4	F9	W4	F9	W4	F9	W4	F9	C3	F9	VARIES	–
707	MAIN CORRIDOR	FL1	F5	–	–	W4	F9	W4	F9	W4	F9	W4	F9	C3	F9	VARIES	–
708	ELECTRICAL ROOM	FL1	F5	–	–	W4	F9	W4	F9	W4	F9	W4	F9	C3	F9	VARIES	–
709	PRIMARY COAGULANT CONTAINMENT AREA	FL1	F5	–	–	W4	F9	W4	F9	W4	F9	W4	F9	C3	F9	VARIES	–
710	AQUEOUS AMMONIA ROOM	FL1	F5	–	–	W4	F9	W4	F9	W4	F9	W4	F9	C3	F9	VARIES	–
711	CORRIDOR	FL1	F5	–	–	W4	F9	W4	F9	W4	F9	W4	F9	C3	F9	VARIES	–
712	CAUSTIC SODA CONTAINMENT AREA	FL1	F5	–	–	W4	F9	W4	F9	W4	F9	W4	F9	C3	F9	VARIES	–
713	SODIUM BISULFITE CONTAINMENT AREA	FL1	F5	–	–	W4	F9	W4	F9	W4	F9	W4	F9	C3	F9	VARIES	–

OPENING SCHEDULE (WINDOWS/LOUVERS/MASONRY OPENINGS)

OPENING NO.	OPENING							GLASS		LOUVER				DETAILS				REMARKS
	WIDTH	HEIGHT	THICKNESS	TYPE	MATERIAL	FINISH	LABEL	CORE	THICK	TYPE	THICK	MATERIAL	FINISH	HEAD	JAMB	JAMB	SILL	
701	4'–0"	4'–8"	8"	–	–	–	–	–	–	A	8"	L1	F1	21/A005	21/A005	21/A005	22/A005	8
702	4'–0"	4'–8"	8"	–	–	–	–	–	–	A	8"	L1	F1	21/A005	21/A005	21/A005	22/A005	8
703	1'–4"	1'–4"	8"	C	L2	F1	–	–	–	–	–	–	–	23/A005	23/A005	23/A005	23/A005	–
704	2'–0"	2'–0"	8"	–	–	–	–	–	–	A	8"	L1	F1	21/A005	21/A005	21/A005	22/A005	8
705	2'–0"	2'–0"	8"	–	–	–	–	–	–	A	8"	L1	F1	21/A005	21/A005	21/A005	22/A005	8
706	1'–4"	1'–4"	8"	C	L2	F1	–	–	–	–	–	–	–	23/A005	23/A005	23/A005	23/A005	–
707	1'–4"	1'–4"	8"	C	L2	F1	–	–	–	–	–	–	–	23/A005	23/A005	23/A005	23/A005	–
708	2'–0"	2'–0"	8"	–	–	–	–	–	–	A	8"	L1	F1	21/A005	21/A005	21/A005	22/A005	8
709	2'–0"	2'–0"	8"	–	–	–	–	–	–	A	8"	L1	F1	21/A005	21/A005	21/A005	22/A005	8
710	2'–0"	2'–0"	8"	C	L2	F1	–	–	–	–	–	–	–	23/A005	23/A005	23/A005	23/A005	–
711	2'–0"	2'–0"	8"	–	–	–	–	–	–	A	8"	L1	F1	21/A005	21/A005	21/A005	22/A005	8
712	1'–4"	1'–4"	8"	C	L2	F1	–	–	–	–	–	–	–	23/A005	23/A005	23/A005	23/A005	–
713	1'–4"	1'–4"	8"	C	L2	F1	–	–	–	–	–	–	–	23/A005	23/A005	23/A005	23/A005	–
714	2'–0"	2'–0"	8"	–	–	–	–	–	–	A	8"	L1	F1	21/A005	21/A005	21/A005	22/A005	8
715	2'–0"	2'–0"	8"	–	–	–	–	–	–	A	8"	L1	F1	21/A005	21/A005	21/A005	22/A005	8
716	2'–0"	2'–0"	8"	C	L2	F1	–	–	–	–	–	–	–	23/A005	23/A005	23/A005	23/A005	–
717	1'–4"	1'–4"	4"	C	L2	F1	–	–	–	–	–	–	–	23/A005	23/A005	23/A005	23/A005	–
718	2'–0"	2'–0"	4"	–	–	–	–	–	–	A	8"	L1	F1	21/A005	21/A005	21/A005	22/A005	8
719	2'–0"	2'–0"	8"	–	–	–	–	–	–	A	8"	L1	F1	21/A005	21/A005	21/A005	22/A005	8
720	2'–0"	2'–0"	8"	C	L2	F1	–	–	–	–	–	–	–	23/A005	23/A005	23/A005	23/A005	–
751	3'–0"	2'–0"	7"	B	WF3	F1	–	CG4	1/4"	–	–	–	–	51/A005	51/A005	51/A005	52/A005	–
752	3'–0"	2'–0"	7"	B	WF3	F1	–	CG4	1/4"	–	–	–	–	51/A005	51/A005	51/A005	52/A005	–
753	3'–0"	2'–0"	7"	B	WF3	F1	–	CG4	1/4"	–	–	–	–	51/A005	51/A005	51/A005	52/A005	–
754	3'–0"	2'–0"	7"	B	WF3	F1	–	CG4	1/4"	–	–	–	–	51/A005	51/A005	51/A005	52/A005	–
755	3'–0"	2'–0"	7"	B	WF3	F1	–	CG4	1/4"	–	–	–	–	51/A005	51/A005	51/A005	52/A005	–
756	3'–0"	2'–0"	7"	B	WF3	F1	–	CG4	1/4"	–	–	–	–	51/A005	51/A005	51/A005	52/A005	–
757	3'–0"	2'–0"	7"	B	WF3	F1	–	CG4	1/4"	–	–	–	–	51/A005	51/A005	51/A005	52/A005	–
758	3'–0"	2'–0"	7"	B	WF3	F1	–	CG4	1/4"	–	–	–	–	51/A005	51/A005	51/A005	52/A005	–
759	3'–0"	2'–0"	7"	B	WF3	F1	–	CG4	1/4"	–	–	–	–	51/A005	51/A005	51/A005	52/A005	–
760	3'–0"	2'–0"	7"	B	WF3	F1	–	CG4	1/4"	–	–	–	–	51/A005	51/A005	51/A005	52/A005	–
761	3'–0"	2'–0"	7"	B	WF3	F1	–	CG4	1/4"	–	–	–	–	51/A005	51/A005	51/A005	52/A005	–
762	3'–0"	2'–0"	7"	B	WF3	F1	–	CG4	1/4"	–	–	–	–	51/A005	51/A005	51/A005	52/A005	–

OPENING TYPE

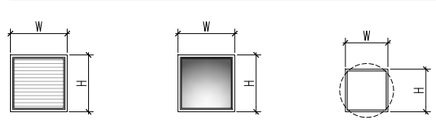

A
FIXED LOUVER

B
FIXED WINDOW

C
WALL MOUNTED
EXHAUST FAN

NOTES

SOC WMA

1. REFER TO GENERAL ARCHITECTURAL NOTES FOR ADDITIONAL INFORMATION AND REQUIREMENTS.
2. WHERE NO CONSTRUCTION DETAILS ARE SHOWN OR NOTED FOR ANY PART OF THE WORK, DETAILS SHALL BE THE SAME AS FOR OTHER SIMILAR WORK.

DOOR SCHEDULE

DOOR NO.	OPENING		DOOR					FRAME		HARDWARE SET #	LABEL	DETAILS				REMARKS
	WIDTH	HEIGHT	THICKNESS	TYPE	MATERIAL	FINISH	CORE / GL	MATERIAL	FINISH			HEAD	JAMB	JAMB	THRESHOLD	
701	3'–0"	7'–10"	1 3/4"	AA	D2	F4	CG2	DF2	F4	–	–	31/A004	31/A004	31/A004	53/A004	1, 2, 3, 5, 6, 7, 9, 12, 13
702	7'–8"	7'–10"	1 3/4"	BB	D2	F4	CG2	DF2	F4	–	–	31/A004	31/A004	31/A004	53/A004	1, 2, 3, 4, 5, 6, 7, 9, 12, 13
703	12'–8"	10'–0"	1 3/4"	CC	D5	F1	–	–	–	–	–	51/A009	52/A009	52/A009	53/A009	1
704	3'–0"	7'–10"	1 3/4"	AA	D2	F4	CG2	DF2	F4	–	–	31/A004	31/A004	31/A004	53/A004	1, 2, 5, 6, 7, 9, 12
705	6'–4"	7'–10"	1 3/4"	BB	D2	F4	CG2	DF2	F4	–	–	31/A004	31/A004	31/A004	53/A004	1, 2, 3, 4, 5, 6, 9, 12, 13
706	12'–8"	10'–0"	1 3/4"	CC	D5	F1	–	–	–	–	–	51/A009	52/A009	52/A009	53/A009	1
707	6'–4"	7'–10"	1 3/4"	BB	D2	F4	CG2	DF2	F4	–	–	31/A004	31/A004	31/A004	53/A004	1, 2, 3, 4, 5, 6, 12
708	6'–4"	7'–10"	1 3/4"	BB	D2	F4	CG2	DF2	F4	–	–	31/A004	31/A004	31/A004	53/A004	2, 3, 4, 5, 6, 12
709	3'–0"	7'–10"	1 3/4"	AA	D2	F4	CG2	DF2	F4	–	–	31/A004	31/A004	31/A004	53/A004	2, 5, 6. 12
710	7'–8"	7'–10"	1 3/4"	BB	D2	F4	CG2	DF2	F4	–	–	31/A004	31/A004	31/A004	53/A004	2, 3, 4, 5, 6, 12
711	3'–0"	3'–6"	1 3/4"	AA	D2	F4	CG2	DF2	F4	–	–	43/A008	43/A008	43/A008	33/A008	1, 5, 6, 9

DOOR TYPE

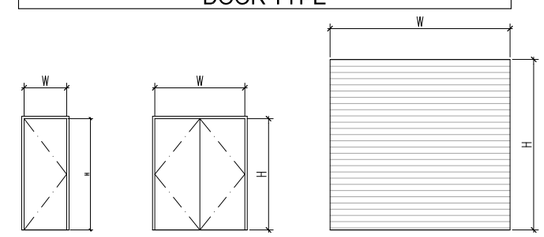

AA
BASIC
FLUSH DOOR

BB
BASIC FLUSH
DOUBLE DOOR

CC
ROLL–UP
DOOR

FILENAME: A709 Door_Opening Schedules.dwg

LAST UPDATED: 2/1/2012 11:14am

LAST SAVED BY: rcstensby

No.	DATE	REVISIONS	APPROVED

DESIGNED: RBF
DRAWN: rcs
CHECKED: wdg

RBF CONSULTING

carollo

IRVINE RANCH WATER DISTRICT

WILLIAM D. GRAEBER CA LIC NO. C11052 ARCHITECT DATE
CINDY MILLER RCE NO. 58116 PROJECT MANAGER DATE
PATRICIA UEMATSU RCE NO. 36762 PRINCIPAL ENGINEER DATE

STATE OF CALIFORNIA WILLIAM D. GRAEBER #C11052 EXPIRES 5/31/2013 REGISTERED ARCHITECT

IRVINE RANCH WATER DISTRICT
BAKER WATER TREATMENT PLANT
PROJECT NO. 11218

CHEMICAL BUILDING
DOOR, OPENING & FINISH SCHEDULE

DRAWING
A709

GENERAL NOTES

GENERAL:

1. STRUCTURAL DESIGN IS IN ACCORDANCE WITH CBC EXCEPT WHEREOTHERWISE INDICATED ON PLANS
2. THE STRUCTURAL SYSTEM AND ALL OF ITS COMPONENTS ARE DESIGN FOR WIND LOADS IN ACCORCANCE WITH THE CBC FOR BASIC WIND SPEED OF 90 MPH, EXPOSURE "C" AND IMPORTANCE FACTOR OF 1.0.
3. THE STRUCTURAL SYSTEM AND ALL OF ITS COMPONENT ARE DESIGN FOR SEISMIC LOADS IN ACCORDANCE WITH THE CBC AS INDICATED IN THE GEOTECHNICAL REPORT.
4. THE STRUCTURAL SYSTEM AND ALL OF ITS COMPONENT ARE DESIGN FOR SNOW LOADS IN ACCORDANCE WITH THE CBC
5. ALL OPEN WEB STEEL JOISTS SHALL BE DESIGNED IN ACCORDANCE WITH THE REQUIREMENTS OF THE CBC.
6. SPECIAL INSPECTION SHALL COMPLY WITH AND PERFORMED IN ACCORDANCE WITH THE REQUIREMENTS OF THE CBC.
7. DIMENSION SHOWN ON THE STRUCTURAL DRAWINGS WHICH ARE CONTROLED BY OTHER DISCIPLINE (MECH., ELEC., ETC.) SHALL BE COORDINATED BY THE CONTRACTOR BEFORE CONSTRUCTION.
8. CONTRACTOR TO COORDINATE ALL EMBEDDED IN AND ATTACHED TO ITEMS TO ALL OR ANY OF STRUCTURAL MEMBERS BEFORE CONSTRUCTON.

MASONARY:

1. CONCRETE BLOCK MASONARY OR BRICK BLOCK UNITS SHALL CONFORM TO ASTM C90 AND THE CBC.
2. SOLID GROUT ALL CELLS OF CONCRETE BLOCK MASONARY AND BRICK BLOCK UNITS UNLESS OTHERWISE NOTED.
3. GROUT SHALL ATTAIN A MINIMUM COMPRESSIVE STRENGTH AT 28 DAYS OF 2000 PSI, UNLESS OTHERWISE SPECIFIED AND SHALL COMPLY WITH THE CBC.
4. MORTAR SHALL BE TYPE S AND SHALL ATTAIN A MINIMUM COMPRESSIVE STRENGTH AT 28 DAYS OF 1800 PSI, UNLESS OTHERWISE SPECIFIED AND SHALL COMPLY WITH THE CBC.
5. F'm MINIMUM 1500 P.S.I. (FOR CMU)

STRUCTURAL STEEL:

1. ALLSTRUCTURAL STEEL SHALL MEET THE ASTM A-36, UNLESS OTHERWISE SPECIFIED.
2. ALL WELLDING SHALL COMPLY WITH AND PERFORMED IN ACCORDANCE WITH THE AISC"STEEL CONSTRUCTION MANUAL AND AWS.

REINFORCED CONCRETE:

1. CONCRETE CONSTRUCTION, SHALL COMPLY WITH "BUILDING CODE REQUIREMENTS FOR STRUCTURAL CONCRETE" (ACI 318) AND " ENVIRONMENTAL ENGINEERING STRUCTURE" (ACI 350R)
2. UNLESS OTHERWISE INDICATED ON THE DRAWINGS, MINIMUM REINFORCEMENT OF CONCRETE WALLS OR SLABS SHALL BE: 10" THICK OR LESS - USE #5 @ 12" E.W. MORE THAN 10" - USE #5 @ 12" E.W., AND E.F.
3. WALL REINFORCEMENT AT CORNERS OR JUNCTIONS OF WALLS SHALL BE CONTIUOUS, LAPPED OR TERMINATED IN AN ACI STANDARD AT 90 DEGREE HOOK. LAP SPLICE SHALL CONFORM WITH DETAIL S304.
4. UNLESS OTHERWISE INDICATED ON THE DRAWINGS, BARS SHALL BE DOWELED. DOWELS SHALL BE THE SAME SIZE AND SPACING AS THE REINFORCEMENT WHICH IS SPLICED TO THE DOWELS.
5. SLABS, BEAMS AND COLUMNS REINFORCING BARS SHALL HAVE A MINIMUM EXTENSION OR ANCHORAGE INTO SIUPPORTS IN ACCORDANCE WITH ACI 318.
6. STIRRUPS SUPPORT BARS SHALL BE PROVIDED TO SECURE TOP BARS AGAINST DISPLACEMENT.
7. KEYWAYS AND WATERSTOP SHALL END 3" BELOW THE TOP OF WALLS, UNLESS THERE IS A SLAB ON TOP OF THE WALL, IN WHICH CASE IT SHALL END AT THE BOTTOM OF THE SLAB. IN JOINTS WHERE WATERSTOP TERMINATES AT ADJOINING SLAB OR WALL, WATERSTOP SHALL BE EMBEDDED IN ADJOINING SLAB OR WALL A MINIMUM OF 6".
8. CONCRETE CURING SHALL BE IN ACCORDANCE WITH THE CONTRACT DOCUMENTS. WHERE WATER CURING IS REQUIRED, MEMBRANE CURING IS NOT ALLOWED. THE CONTRACTOR IS WARNED THAT WATER CURING IS DIFFICULT AT TIMES DUE TO WIND AND DRY CONDITIONS. THE CONTRACTOR SHALL STUDY REQUIREMENTS AND SHALL FURNISH ADEQUATE SYSTEMS TO PROVIDE WATER CURING WHERE REQUIRED. TOP OF WALLS SHALL BE KEPT VISIBLY MOIST AT ALL TIMES AND SHALL BE FLOODED NOT LESS THAN THREE TIMES DAILY.
9. WATERSTOP SHALL BE PLACED IN CONSTRUCTION, CONTRACTION, AND EXPANSION JOINTS IN WATERBEARING SLABS AND WALLS UNLESS OTHERWISE INDICATED ON THE DRAWINGS, AND IN WALLS AND SLABS SUBJECTED TO GROUNDWATER. WATERSTOP IN THE WALLS SHALL BE CARRIED INTO SLABS AND SHALL BE SPLICED WITH THE WATERSTOP IN THE SLABS.
10. NO BACKFILL SHALL BE PLACED AGAINST WALLS UNTIL CONCRETE HAS REACHED THE SPECIFIED STRENGTH AND THE CONNECTING SLABS AND BEAMS HAVE BEEN CAST AND HAVE REACHED THE SPECIFIED STRENGTH.
11. LAP SPLICES:
    A. WHEN MULTIPLE BARS ARE SPLICED AT THE SAME SECTION, THE CLEAR BAR SPACING IS THE MINIMUM CLEAR DISTANCE BETWEEN THE BARS OUTSIDE THE SPLICE LENGTH LESS ONE BAR DIAMETER.
    B. UNLESS OTHERWISE INDICATED ON THE DRAWINGS, THE BARS AT A LAP SPLICE SHALL BE IN CONTACT WITH EACH OTHER.
    C. FY = 60,000 PSIFOR REINFORCING BARS
    F'C = 4,000 PSIFOR CONCRETE
    D. TOP BARS ARE HORIZONTAL REINFORCEMENT SO PLACED THAT MORE THAN 12 INCHES OF FRESH CONCRETE IS CAST IN THE MEMBER BELOW THE BAR.
    E. HORIZONTAL BARS IN CIRCULAR WALLS OF HYDRAULIC STRUCTURES SHALL BE SPLICED WITH TOP BAR LAP SPLICES WITH THE SPLICES IN EACH LAYER OF REINFORCEMENT STAGGERED ONE SPLICE LENGTH.

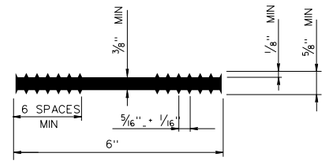

6" FLATSTRIP WATERSTOP

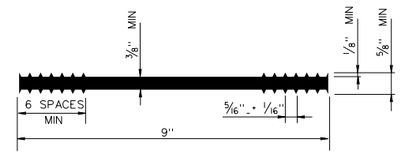

9" FLATSTRIP WATERSTOP

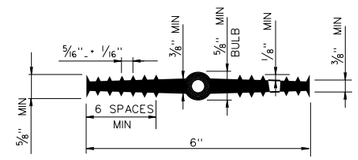

6" CENTER-BULB WATERSTOP

S300 TYP — 6" WATERSTOP

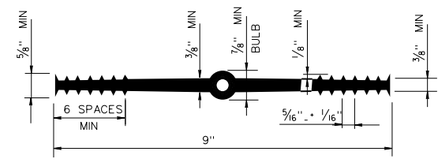

9" CENTER-BULB WATERSTOP

S301 TYP — 9" WATERSTOP

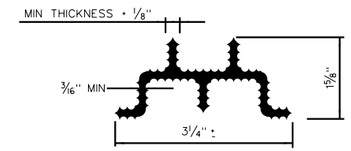

2 - RIB WATERSTOP

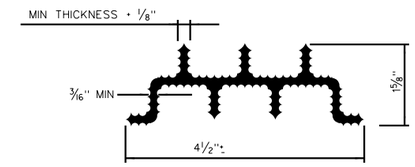

3 - RIB WATERSTOP

S302 TYP — MULTI-RIB WATERSTOP

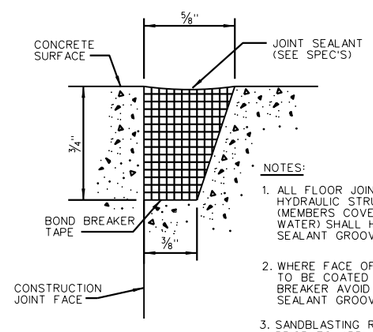

NOTES:

1. ALL FLOOR JOINTS OF HYDRAULIC STRUCTURES (MEMBERS COVERED WITH WATER) SHALL HAVE A SEALANT GROOVE
2. WHERE FACE OF JOINT IS TO BE COATED WITH BOND BREAKER AVOID COATING SEALANT GROOVE
3. SANDBLASTING REQUIRED PRIOR TO APPLICATION OF PRIMER
4. USE BONDBREAKER TAPE ONLY ON SLIP DOWEL JOINTS

S303 TYP — SEALANT GROOVE

UNLESS OTHERWISE INDICATED ON THE DRAWINGS, CONCRETE COVER OVER #11 AND SMALLER REINF BARS SHALL BE AS FOLLOWS:

A. SLABS AND JOISTS:
   FORMED CONCRETE SURFACES AND UNFORMED TOP SURFACES FOR DRY CONDITIONS:
      #7 BARS AND SMALLER.....1"
      #8 BARS AND LARGER.....1 1/2"
   FORMED CONCRETE SURFACES AND UNFORMED TOP SURFACES EXPOSED TO WEATHER, IN CONTACT WITH SOIL OR WATER, OR LOCATED OVER WATER:.....2"
B. BEAMS AND COLUMNS:
   FORMED CONCRETE SURFACES FOR DRY CONDITIONS:
      STIRRUPS, SPIRALS, AND TIES.....1 1/2"
      PRINCIPAL REINFORCEMENT.....2"
   FORMED CONCRETE SURFACES EXPOSED TO WEATHER WATER, OR WEATHER, OR BEAMS LOCATED OVER WATER
      STIRRUPS AND TIES.....2"
      PRINCIPAL REINFORCEMENT.....2 1/2"
C. WALLS:
   FORMED CONCRETE SURFACES FOR DRY CONDITIONS:
      #7 BARS AND SMALLER.....1"
      #8 BARS AND LARGER.....1 1/2"
   FORMED CONCRETE SURFACES EXPOSED TO EARTH, WATER, OR WEATHER.....2"
D. FOOTINGS AND BASE SLABS:
   FORMED VERTICAL CONCRETE SURFACES.....2"
   AT UNFORMED CONCRETE SURFACES CAST AGAINST THE EARTH OR CONCRETE WORK MATS.....3"
   TOP SURFACE OF FOOTINGS AND BASE SLABS.....SAME AS SLABS

S304 TYP — TYP. CONCRETE COVER OVER REINFORCEMENT

REINFORCING BAR LAP SPLICE				
BAR SIZE	MINIMUM CLEAR COVER (BAR DIA)	MINIMUM CLEAR BAR SPACING (BAR DIA)	LAP SPLICE LENGTH (INCHES)	
			TOP BARS	OTHER BARS
#4	MORE THAN 1	MORE THAN 2	32 *	25 *
	MORE THAN 2	MORE THAN 4	24	18
#5	MORE THAN 1	MORE THAN 2	40 *	31 *
	MORE THAN 2	MORE THAN 4	30	23
#6	MORE THAN 1	MORE THAN 2	48 *	37 *
	MORE THAN 2	MORE THAN 5	36	28
#7	MORE THAN 1	MORE THAN 2	70 *	54 *
	MORE THAN 2	MORE THAN 5	43	33
#8	MORE THAN 1	MORE THAN 2	80 *	62 *
	MORE THAN 2	MORE THAN 5	56	43
#9	MORE THAN 1	MORE THAN 2	90 *	70 *
	MORE THAN 2	MORE THAN 5	71	55
#10	MORE THAN 1	MORE THAN 2	114 *	88 *
	MORE THAN 2	MORE THAN 5	91	70
#11	MORE THAN 1	MORE THAN 2	140 *	108 *
	MORE THAN 2	MORE THAN 5	112	86

NOTE:

1. THE SPLICE LENGTH SHALL BE SELECTED ONLY WHEN BOTH REQ'MTS. OF THE CLEAR COVER AND CLEAR BAR SPACING ARE SATISFIED.
2. * IF THE CLEAR SPACING IS LESS THAN OR EQUAL TO TWO BAR DIA. OR THE CLEAR COVER IS LESS THAN OR EQUAL TO ONE BAR DIA. THE LAP SPLICE LENGTH SHALL BE INCREASED BY 50 PERCENT.

S305 TYP — REINFORCING BAR LAP SPLICE

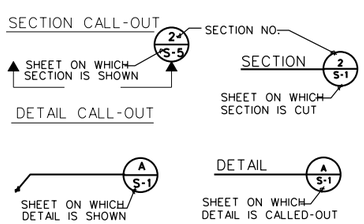

STANDARD DETAIL CALL-OUT

DETAIL S- TYP

DETAILS NOT PERTAINING TO THE PROJECT ARE MARKED THUS N. I. C. (NOT IN CONTRACT)

SECTION AND DETAIL CALL-OUT

No.	DATE	REVISIONS	APPROVED

DESIGNED: OAA
DRAWN: GMT
CHECKED: OAA

RBF CONSULTING

carollo

IRVINE RANCH WATER DISTRICT

M. OSAMA ABDEL-AAL RCE NO. 34252 PROJECT MANAGER DATE
JIM MEYERHOFER RCE NO. 48451 PROJECT MANAGER DATE
PATRICIA UEMATSU RCE NO. 36762 PRINCIPAL ENGINEER DATE

IRVINE RANCH WATER DISTRICT
BAKER WATER TREATMENT PLANT
PROJECT NO. 11218

STRUCTURAL STANDARD DETAILS - 1

DRAWING S001

Att3_IG2_WorkPlan_4of7

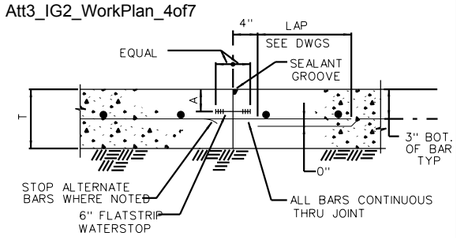

SINGLE MAT REINF - CONTINUOUS THRU JOINT
(ONLY WHEN SPECIFIED ON DRAWINGS)

NOTES:
1. IN ALL CONSTRUCTION JOINTS WITH WATERSTOPS, APPLY 2 COATS OF BOND BREAKER TO FACE OF JOINT, AVOID COATING WATERSTOP (AND SEALANT GROOVE WHERE USED)
2. WATERSTOPS AND SEALANT GROOVES TO BE PROVIDED IN ALL WATER RETAINING SLABS, SEE DRAWINGS, FOR OTHER LOCATIONS WHERE THEY MAY BE REQUIRED
3. STAGGER SPLICES UNLESS NOTED OTHERWISE

S306 TYP — SLAB ON GRADE CONSTRUCTION JOINT

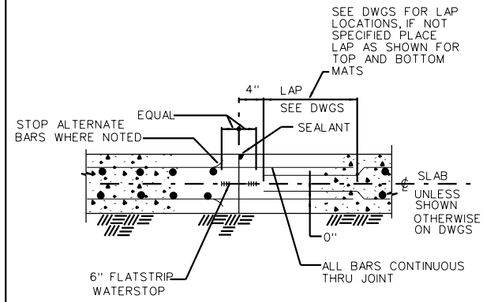

DOUBLE MAT REINF

NOTES:
1. IN ALL CONSTRUCTION JOINTS WITH WATERSTOPS, APPLY 2 COATS OF BOND BREAKER TO FACE OF JOINT, AVOID COATING WATERSTOP (AND SEALANT GROOVE WHERE USED)
2. WATERSTOPS AND SEALANT GROOVES TO BE PROVIDED IN ALL WATER RETAINING SLABS, SEE DRAWINGS, FOR OTHER LOCATIONS WHERE THEY MAY BE REQUIRED
3. STAGGER SPLICES UNLESS NOTED OTHERWISE

S307 TYP — SLAB ON GRADE CONSTRUCTION JOINT

Attachment 3

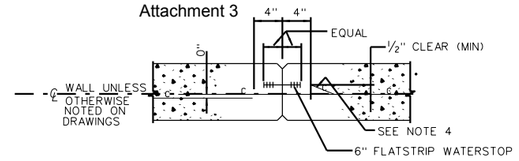

SINGLE CURTAIN REINF

WITH WATERSTOP (A) - NO WATERSTOP (B) -

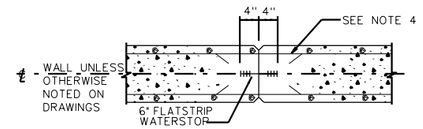

DOUBLE CURTAIN REINF

WITH WATERSTOP (C) - NO WATERSTOP (D) -

NOTES:
1. IN ALL WALL CONSTRUCTION JOINTS WITH WATERSTOPS APPLY 2 COATS OF BOND BREAKER TO FACE OF JOINT AVOID COATING WATERSTOP
2. WHERE WATERSTOP IS REQUIRED IN SINGLE CURTAIN WALL REINFORCEMENT PLACE WATERSTOP ON WATER SIDE OF WALL
3. UNLESS OTHERWISE NOTED ¾" CHAMFERS SHALL BE OMITTED IN SURFACES TO RECEIVE ARCHITECTURAL TREATMENT
4. UNLESS SPECIFICALLY NOTED OTHERWISE #5 AND LARGER BARS SHALL BE CONTINUOUS THRU JOINT. #4 & SMALLER SHALL STOP ALTERNATE AT JOINT
5. STAGGER SPLICES UNLESS NOTED OTHERWISE

S308 TYP — VERTICAL WALL CONSTRUCTION JOINT DETAILS
NTS

SOC WMA

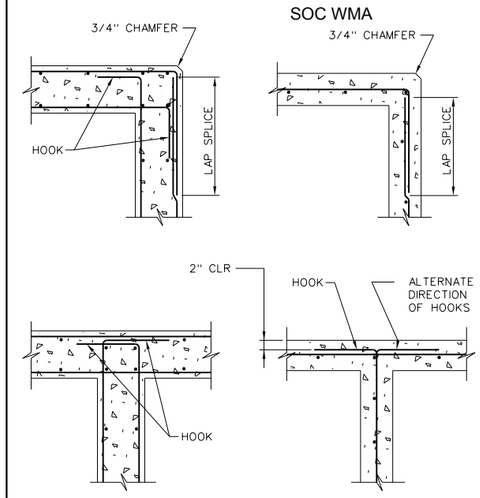

NOTE:
1. ALL HOOKS SHALL BE ACI STD 90 DEGREE HOOKS.

S309 TYP — REINFORCEMENT AT CORNERS AND JUNCTIONS

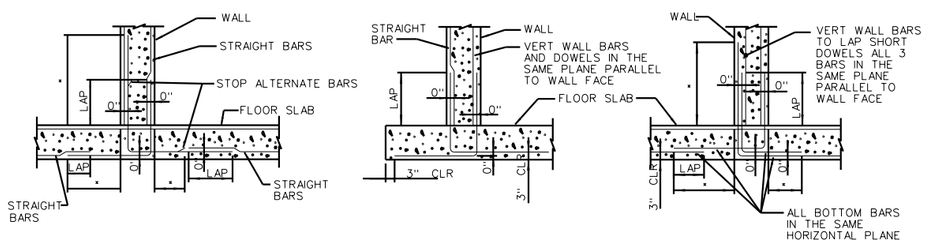

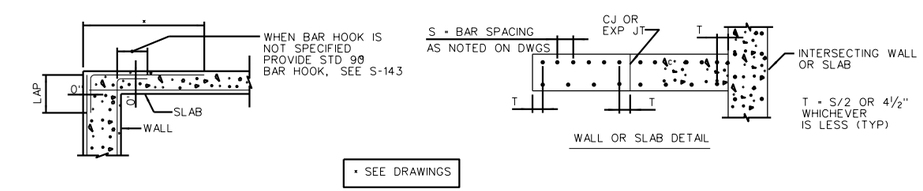

S310 TYP — STANDARD FOR REINFORCING BAR DETAILS

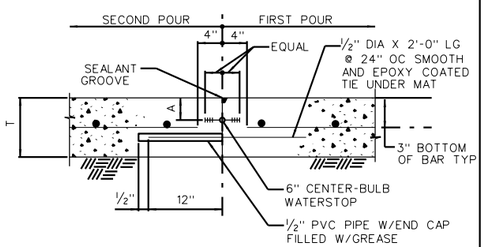

SINGLE MAT REINF - SLEEVE - TYPE JOINT
(TYP CONSTRUCTION JOINT UNLESS OTHERWISE NOTED)

NOTES:
1. IN ALL CONSTRUCTION JOINTS WITH WATERSTOPS, APPLY 2 COATS OF BOND BREAKER TO FACE OF JOINT, AVOID COATING WATERSTOP (AND SEALANT GROOVE WHERE USED)
2. WATERSTOPS AND SEALANT GROOVES TO BE PROVIDED IN ALL WATER RETAINING SLABS, SEE DRAWINGS, FOR OTHER LOCATIONS WHERE THEY MAY BE REQUIRED
3. STAGGER SPLICES UNLESS NOTED OTHERWISE

T	A
6"	2"
7"	2½"
8"	2½"

S311 TYP — SLAB ON GRADE CONSTRUCTION JOINT

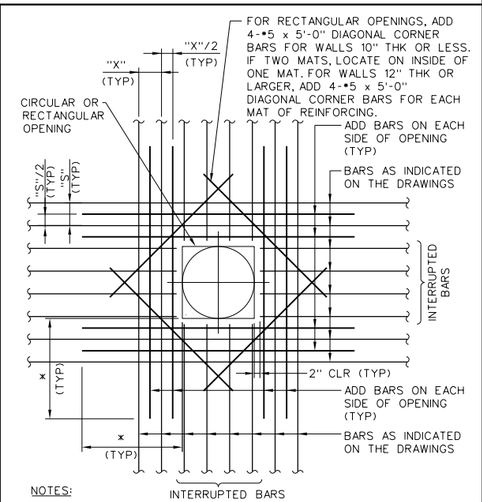

NOTES:
1. AREA OF ADD BARS AT EACH EDGE OF OPENING IN EACH DIRECTION SHALL MATCH 1/2 THE CROSS SECTIONAL AREA OF THE INTERRUPTED BARS.
2. PROVIDE STANDARD ACI HOOKS ON BARS IF STRAIGHT EXTENSION, PAST THE OPENING, CANNOT BE ACHIEVED.
3. PLACE ADD BARS IN SAME PLANES AS INDICATED REINFORCING.
4. PLACE #5 DIAGONAL BARS UNDER INDICATED REINFORCING.
5. x DIMENSION EQUALS OPENING DIMENSION MEASURED PERPENDICULAR TO ADD BARS PLUS LAP SPLICE LENGTH.

S314 TYP — ADDITIONAL REINFORCING AT OPENINGS IN CONCRETE SLABS OR WALLS

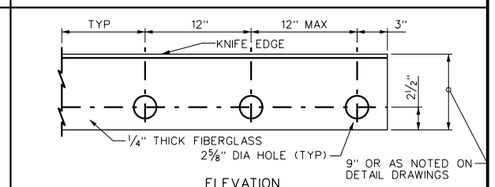

ELEVATION

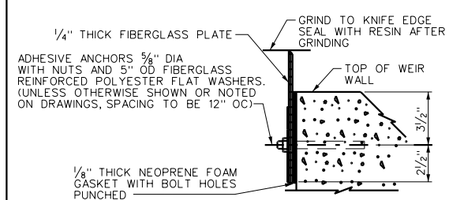

S349 TYP — FRP WEIR PLATE

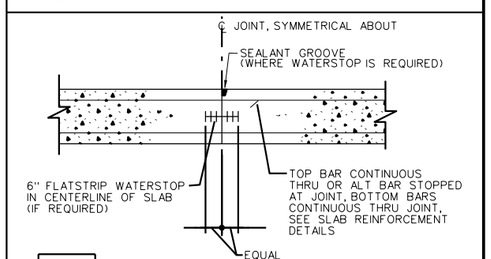

S316 TYP — SUSPENDED SLAB CONSTRUCTION JOINT DETAIL

No.	DATE	REVISIONS	APPROVED

DESIGNED: OAA
DRAWN: GMT
CHECKED: OAA

RBF CONSULTING — carollo — IRVINE RANCH WATER DISTRICT

M. OSAMA ABDEL-AAL RCE NO. 34252 PROJECT MANAGER DATE
JIM MEYERHOFER RCE NO. 48451 PROJECT MANAGER DATE
PATRICIA UEMATSU RCE NO. 36762 PRINCIPAL ENGINEER DATE

IRVINE RANCH WATER DISTRICT
BAKER WATER TREATMENT PLANT
PROJECT NO. 11218

STRUCTURAL STANDARD DETAILS - 2

DRAWING S002
SHEET 170 OF 632