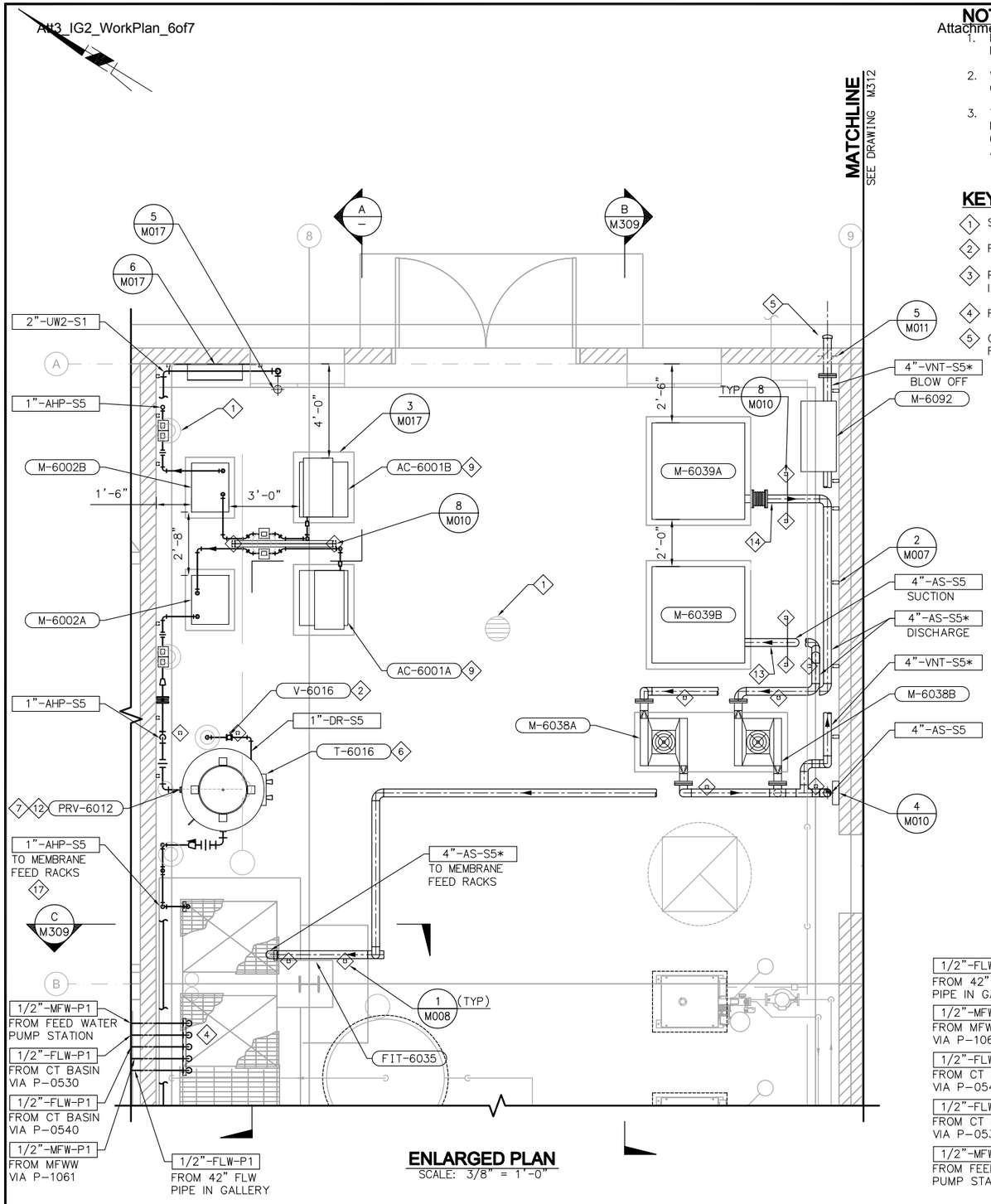

ENLARGED PLAN
SCALE: 3/8" = 1'-0"

NOTES

1. REFER TO M001 – MECHANICAL NOTES FOR ADDITIONAL INFORMATION AND REQUIREMENTS.
2. WHERE NO CONSTRUCTION DETAILS ARE SHOWN OR NOTED FOR ANY PART OF THE WORK, DETAILS SHALL BE THE SAME AS FOR OTHER SIMILAR WORK.
3. THIS SHEET SHOWS EQUIPMENT PROVIDED BY PALL INTEGRAL TO THE MEMBRANE SYSTEM. REFER TO BOTH PROJECT AND PALL DRAWINGS (VOLUME 4) FOR PROCESS AND INSTRUMENTATION DRAWINGS FOR THIS AREA.

KEY NOTES

1. SEE PLUMBING DRAWINGS FOR DRAIN LOCATION AND PIPING.
2. ROUTE DISCHARGE PIPING TO FLOOR DRAIN, MAINTAIN 6" AIR GAP.
3. PIPING CONNECTION PROVIDED FOR AE/AT-6009, SEE ELECTRICAL AND INSTRUMENTATION FOR ADDITIONAL INFORMATION.
4. ROUTE TO SAMPLE SINK IN LAB.
5. COVER VENT END WITH 316 SS SCREEN SECURED IN PLACE WITH BOLTED RETAINER RING.
6. ORIENTATE TANK WITH MANWAY, FACING CENTER OF ROOM. REFER TO PALL SUBMITTAL FOR TANK CONNECTION LOCATIONS.
7. CONTRACTOR TO PROVIDE 3/4" X 1/2" SST REDUCING BUSHING FOR PRV CONNECTIONS.
8. CONNECTION FOR PIT-6011 AND PI-6018. TO PROVIDE VALVE MANIFOLD. SEE ELECTRICAL AND INSTRUMENTATION DRAWINGS FOR ADDITIONAL INFORMATION.
9. AIR DRYERS ARE EQUIPPED WITH DRAIN VALVES V-6063 A/B. ROUTE OUTLET PIPING (P1) TO DRAINS REFER TO PALL PIDS FOR DETAILS.
10. FIT-6065 (FURNISHED BY MEMBRANE SYSTEM SUPPLIER). SEE ELECTRICAL AND INSTRUMENTATION DRAWINGS FOR ADDITIONAL INFORMATION.
11. PROVIDE THREADED OUTLET FOR FIT-6065 PROVIDED BY PALL. REFER TO INSTRUMENTATION DRAWINGS FOR INSTALLATION DETAIL.
12. RECEIVER INLET PORT.
13. CONTRACTOR TO PROVIDE 4" SUCTION PIPING FOR OUTSIDE AIR CONNECTION. REFER TO PALL SUBMITTAL FOR CONNECTION DETAILS. COORDINATE CONNECTION WITH BLOWER SUPPLIER. INSTALL PALL SUPPLIED PRESSURE (PI6030A) AND TEMPERATURE (TI6031A) INSTRUMENTS ON SUCTION PIPING. REFER TO INSTRUMENTATION DRAWINGS FOR INSTALLATION DETAILS.
14. SUCTION PIPING NOT SHOWN.
15. CONTRACTOR TO PROVIDE 1/2" 316 SST FITTINGS AND DRAIN VALVE. INCLUDE ISOLATION BALL VALVE.
16. CONTRACTOR TO PROVIDE 1/2" PVC PIPE BETWEEN EQUIPMENT DRAIN VALVES AND FLOOR DRAIN. (MAINTAIN 6" AIR GAP).
17. CONTRACTOR TO ROUTE 1" AHP COMPRESSED AIR LOOP PIPING AS SHOWN ON THE DRAWINGS. TIE INTO PALL SCREENED MANIFOLDS.

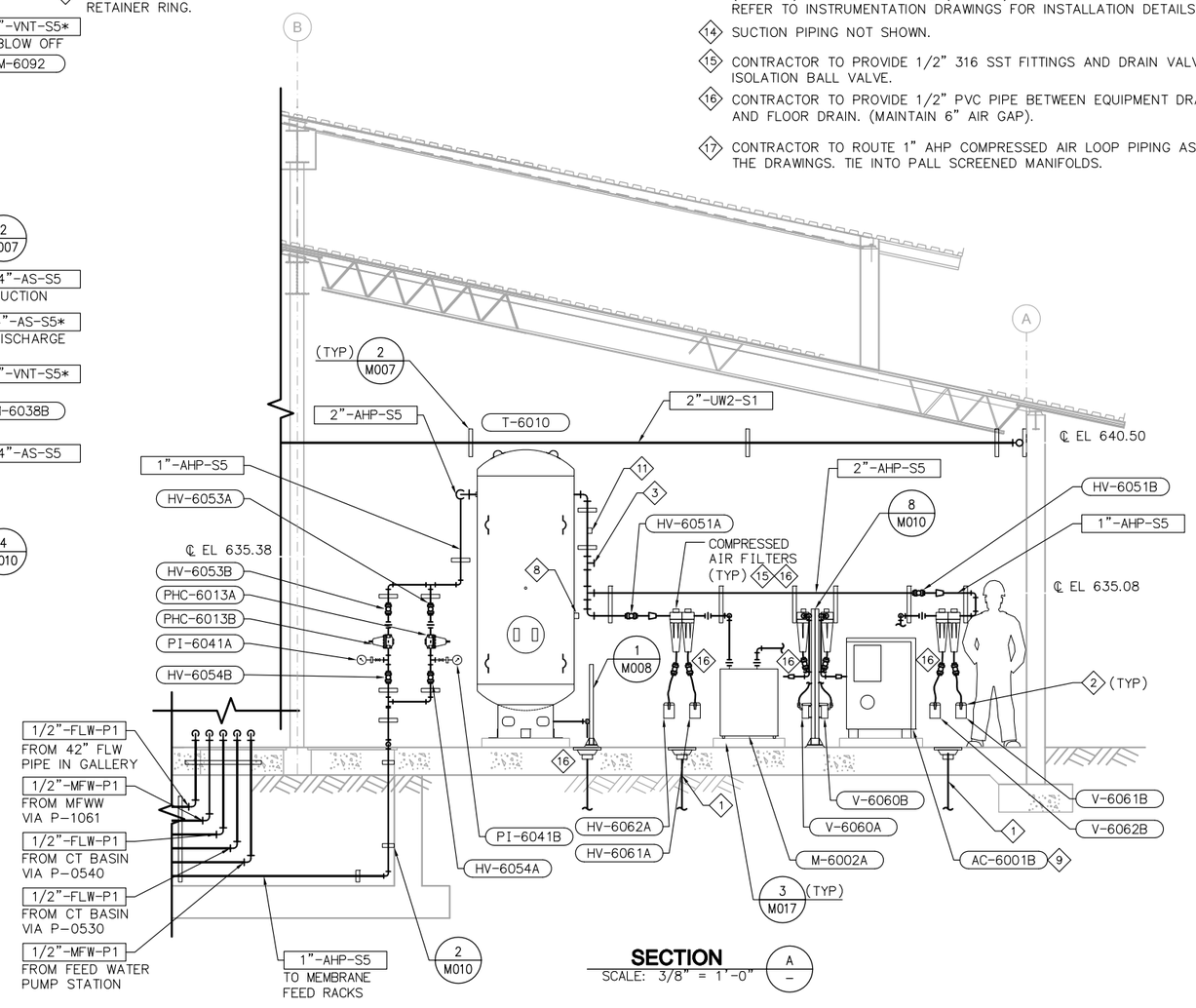

SECTION
SCALE: 3/8" = 1'-0"

FILENAME: 8127A10-6232-M308.dwg
LAST UPDATED: 01/26/2012 06:07 AM
LAST SAVED BY: treo

No.	DATE	REVISIONS	APPROVED

DESIGNED: DAH
DRAWN: RCM
CHECKED: TSD

RBF CONSULTING
carollo
IRVINE RANCH WATER DISTRICT

JIM MEYERHOFER	RCE NO. 48451	PROJECT MANAGER	DATE
CINDY MILLER	RCE NO. 58116	PROJECT MANAGER	DATE
PATRICIA UEMATSU	RCE NO. 36762	PRINCIPAL ENGINEER	DATE

IRVINE RANCH WATER DISTRICT
BAKER WATER TREATMENT PLANT
PROJECT NO. 11218

TREATMENT BUILDING BLOWER/COMPRESSOR ROOM ENLARGED PLAN AND SECTION

DRAWING **M308**

NOTES

1. REFER TO M001 – MECHANICAL NOTES FOR ADDITIONAL INFORMATION AND REQUIREMENTS.
2. WHERE NO CONSTRUCTION DETAILS ARE SHOWN OR NOTED FOR ANY PART OF THE WORK, DETAILS SHALL BE THE SAME AS FOR OTHER SIMILAR WORK.
3. THIS SHEET SHOWS EQUIPMENT PROVIDED BY PALL INTEGRAL TO THE MEMBRANE SYSTEM. REFER TO BOTH PROJECT AND PALL DRAWINGS (VOLUME 4) FOR PROCESS AND INSTRUMENTATION DRAWINGS FOR THIS AREA.

KEY NOTES

SOC WMA

1. SEE PLUMBING DRAWINGS FOR DRAIN LOCATION AND PIPING.
2. PIPING CONNECTION PROVIDED FOR TT–6097, SEE ELECTRICAL AND INSTRUMENTATION FOR ADDITIONAL INFORMATION AND INSTALLATION DETAILS.
3. COVER VENT END WITH A 24–MESH, 316 SS SCREEN SECURED IN PLACE WITH BOLTED RETAINER RING.
4. PIT–6096. PALL TO PROVIDE VALVE MANIFOLD. SEE INSTRUMENTATION DRAWINGS FOR ADDITIONAL INFORMATION AND INSTALLATION DETAILS.
5. INSTALL FIT–6035 IN COMBINED BLOWER DISCHARGE PIPING AS SHOWN. REMOTE MOUNT ELECTRONICS ENCLOSURE AS SHOWN. SEE ELECTRICAL AND INSTRUMENTATION DRAWINGS FOR ADDITIONAL INFORMATION AND INSTALLATION DETAILS.

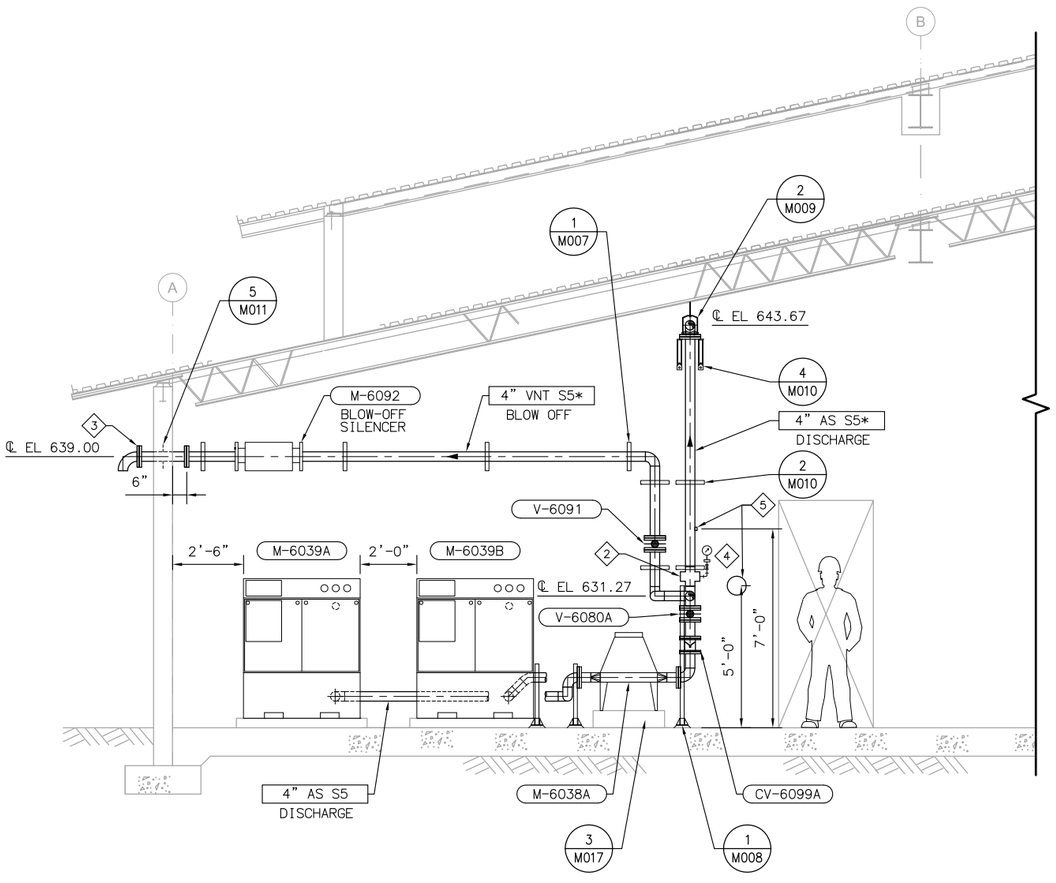

SECTION B / M308
SCALE: 3/8" = 1'-0"

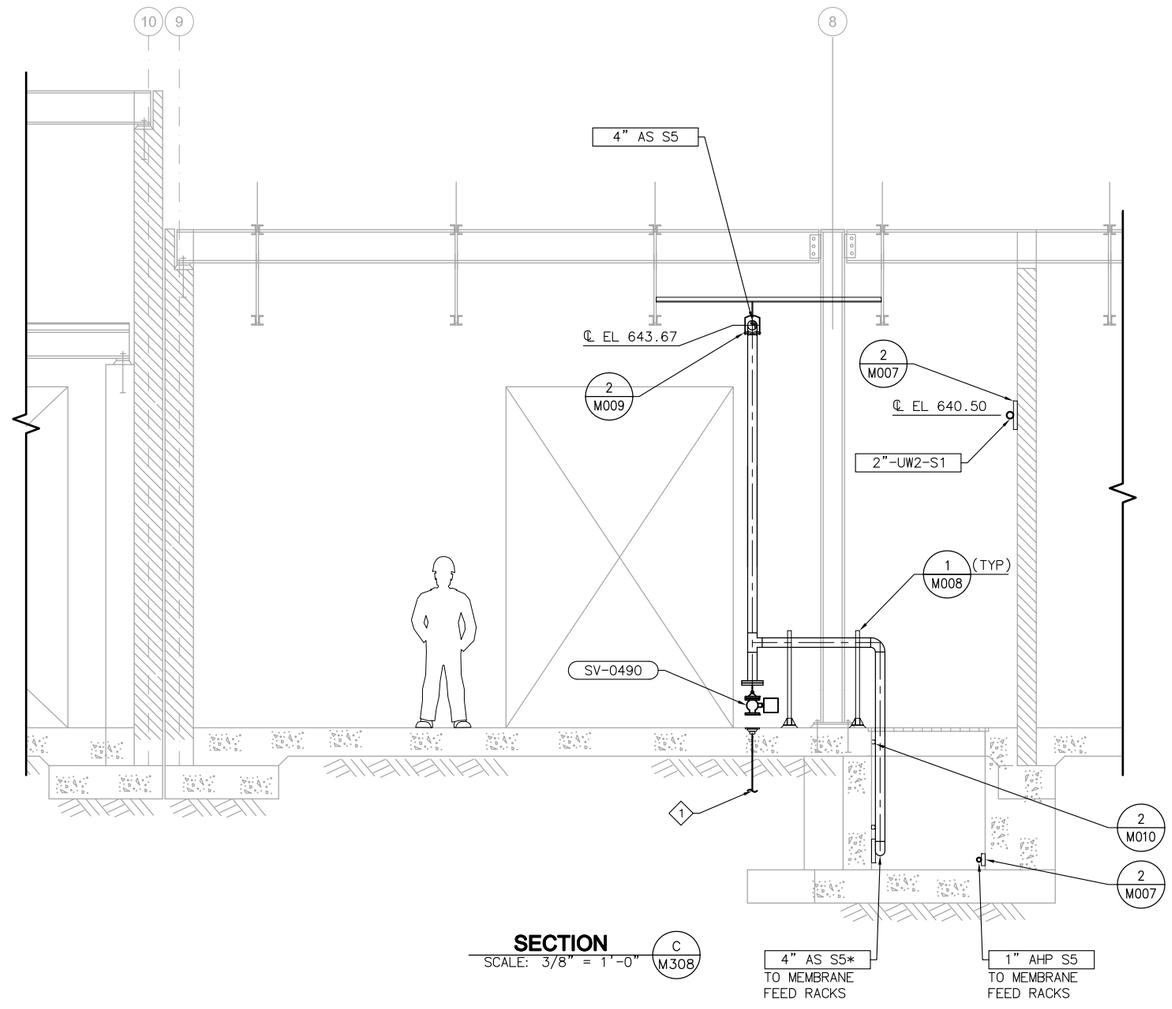

SECTION C / M308
SCALE: 3/8" = 1'-0"

FILENAME: 8127A10–6232–M309.dwg
LAST UPDATED: 01/26/2012 07:43 AM
LAST SAVED BY: trea

No.	DATE	REVISIONS	APPROVED

DESIGNED: DAH
DRAWN: RCM
CHECKED: TSD

RBF CONSULTING
carollo
IRVINE RANCH WATER DISTRICT

JIM MEYERHOFER	RCE NO. 48451	PROJECT MANAGER	DATE
CINDY MILLER	RCE NO. 58116	PROJECT MANAGER	DATE
PATRICIA UEMATSU	RCE NO. 36762	PRINCIPAL ENGINEER	DATE

IRVINE RANCH WATER DISTRICT
BAKER WATER TREATMENT PLANT
PROJECT NO. 11218

TREATMENT BUILDING BLOWER/COMPRESSOR ROOM SECTIONS

DRAWING
M309
SHEET
335 OF 632

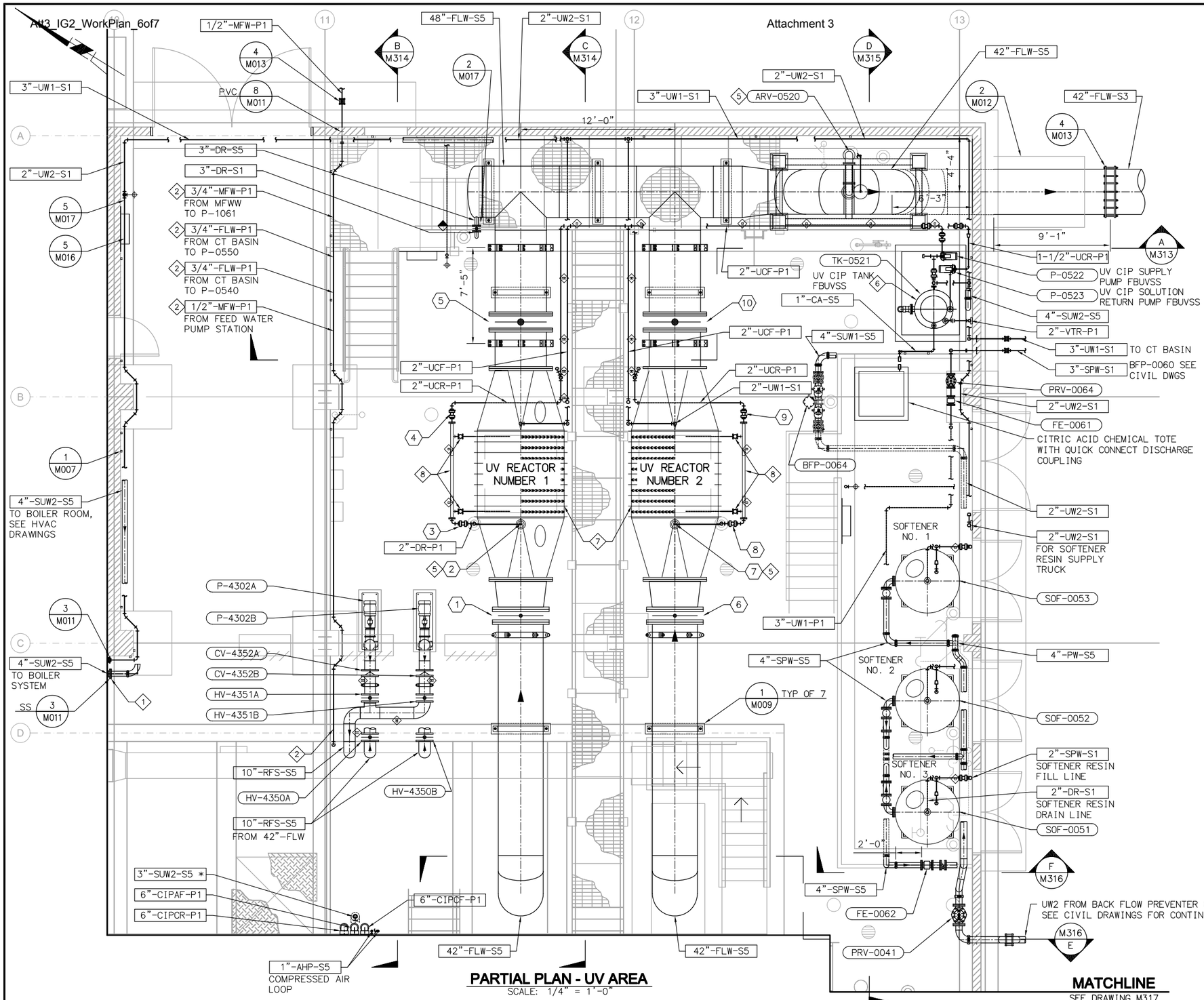

PARTIAL PLAN - UV AREA

SCALE: 1/4" = 1'-0"

MATCHLINE

SEE DRAWING M317

NOTES

1. REFER TO M001 – MECHANICAL NOTES FOR ADDITIONAL INFORMATION AND REQUIREMENTS.
2. WHERE NO CONSTRUCTION DETAILS ARE SHOWN OR NOTED FOR ANY PART OF THE WORK, DETAILS SHALL BE THE SAME AS FOR OTHER SIMILAR WORK.
3. FOR CONTINUATION OF PIPING OUTSIDE OF STRUCTURES, SEE CIVIL DRAWINGS.
4. THIS SHEET SHOWS EQUIPMENT PROVIDED BY PALL INTEGRAL TO THE MEMBRANE SYSTEM. REFER TO BOTH PROJECT AND PALL DRAWINGS (VOLUME 4) FOR PROCESS AND INSTRUMENTATION DRAWINGS FOR THIS AREA.
5. THIS SHEET SHOWS EQUIPMENT PROVIDED BY WEDECO INTEGRAL TO THE UV SYSTEM. REFER TO BOTH PROJECT AND WEDECO DRAWINGS FOR PROCESS AND INSTRUMENTATION DRAWINGS FOR THIS AREA.
6. ALL WEDECO SUPPLIED EQUIPMENT SHAL BE INSTALLED BY THE CONTRACTOR.
7. SEE PLUMBING DRAWINGS FOR DRAIN LOCATION AND PIPING

KEY NOTES

1. RESTRICTED EXPANSION JOINT. TYPICAL OF ALL PROCESS PIPING CROSSING BUILDING EXPANSION JOINTS.
2. ROUTE TO SAMPLE SINK IN LAB.
3. NOT USED.
4. 2" SS NPT PIPE CONNECTION.
5. UV SYSTEM SUPPLIER TO PROVIDE AIR RELEASE VALVE, LEVEL SWITCH, AND TEMPERATURE SWITCH ON A COMMON MANIFOLD FROM UV REACTOR SERVICE CONNECTION. REFER TO ELECTRICAL, INSTRUMENTATION, AND UV SYSTEM SUBMITTAL DRAWINGS FOR ADDITIONAL INFORMATION. ROUTE DRAIN PIPING TO NEAREST FLOOR DRAIN, MAINTAIN 6" AIR GAP.
6. ALL INTERCONNECTING PIPING FOR THE UV CIP SYSTEM SHALL BE FURNISHED BY THE CONTRACTOR. REFER TO WEDECO SUBMITTAL NO. 1 FOR UV SUPPLIER SCOPE OF SUPPLY.
7. INSTALL UV REACTORS WITH LAMPS ANGLED TOWARD CENTER FRP WALKWAY.
8. MANIFOLD AND BALL VALVES FURNISHED BY UV SYSTEM SUPPLIER. INTERCONNECTING PIPING FURNISHED BY INSTALLING CONTRACTOR.

EQUIPMENT TAGS

1	BFV-0501	6	BFV-0511
2	ARV-0501	7	ARV-0511
3	BV-0504	8	BV-0514
4	BV-0505	9	BV-0515
5	BFV-0502	10	BFV-0512

FILENAME: 8127A10-6232-M312.dwg
LAST UPDATED: 01/26/2012 07:56 AM
LAST SAVED BY: trea

No.	DATE	REVISIONS	APPROVED

DESIGNED: DAH
DRAWN: RCM
CHECKED: TSD

RBF CONSULTING

carollo

IRVINE RANCH WATER DISTRICT

JIM MEYERHOFER	RCE NO. 48451	PROJECT MANAGER	DATE
CINDY MILLER	RCE NO. 58116	PROJECT MANAGER	DATE
PATRICIA UEMATSU	RCE NO. 36762	PRINCIPAL ENGINEER	DATE

IRVINE RANCH WATER DISTRICT
BAKER WATER TREATMENT PLANT
PROJECT NO. 11218

TREATMENT BUILDING UV DISINFECTION AREA ENLARGED PLAN

DRAWING **M312**

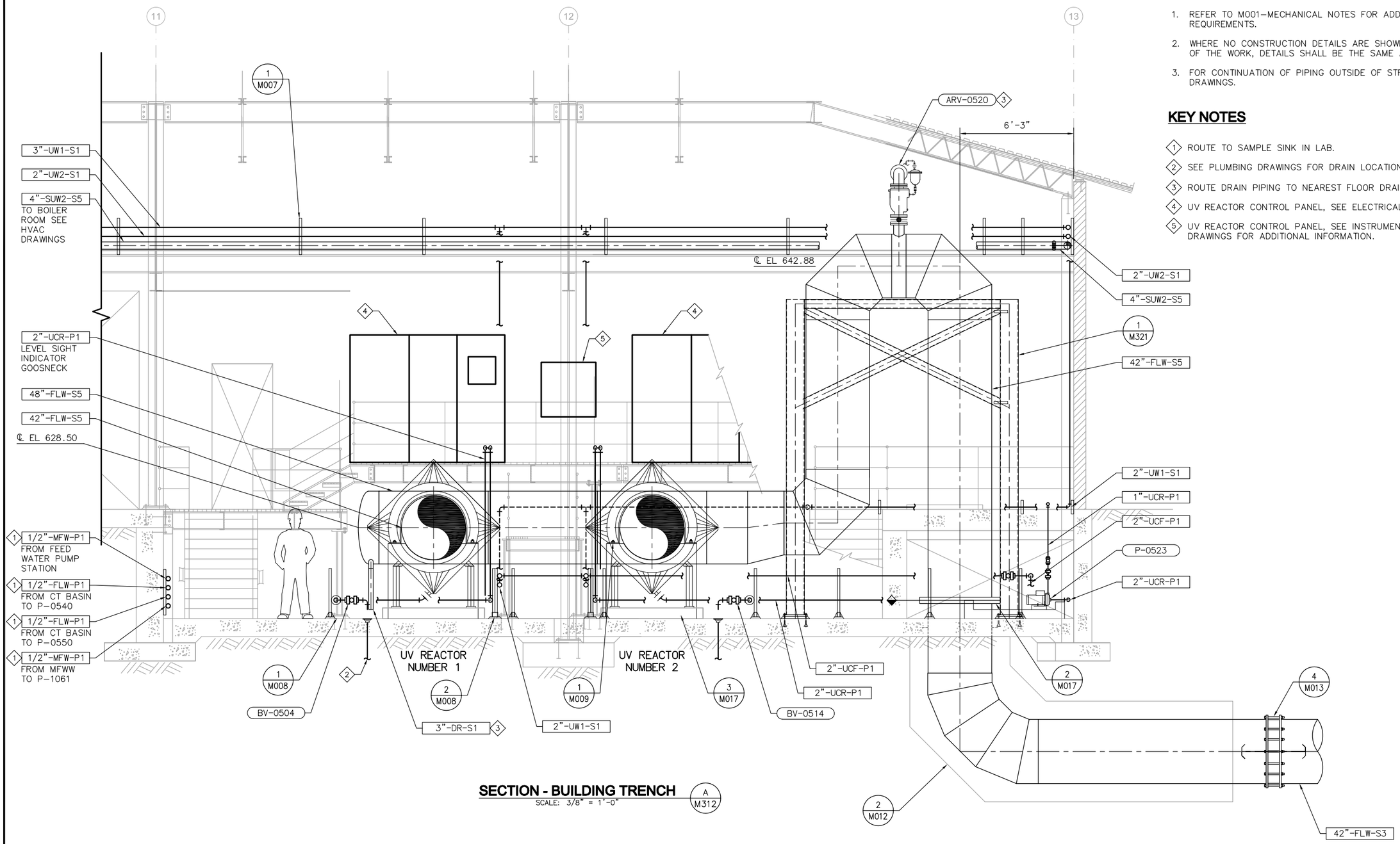

SECTION - BUILDING TRENCH

SCALE: 3/8" = 1'-0"

A
M312

NOTES

1. REFER TO M001–MECHANICAL NOTES FOR ADDITIONAL INFORMATION AND REQUIREMENTS.
2. WHERE NO CONSTRUCTION DETAILS ARE SHOWN OR NOTED FOR ANY PART OF THE WORK, DETAILS SHALL BE THE SAME AS FOR OTHER SIMILAR WORK.
3. FOR CONTINUATION OF PIPING OUTSIDE OF STRUCTURES, SEE CIVIL DRAWINGS.

KEY NOTES

1. ROUTE TO SAMPLE SINK IN LAB.
2. SEE PLUMBING DRAWINGS FOR DRAIN LOCATION AND PIPING.
3. ROUTE DRAIN PIPING TO NEAREST FLOOR DRAIN, MAINTAIN 6" AIR GAP.
4. UV REACTOR CONTROL PANEL, SEE ELECTRICAL DRAWINGS.
5. UV REACTOR CONTROL PANEL, SEE INSTRUMENTATION AND ELECTRICAL DRAWINGS FOR ADDITIONAL INFORMATION.

FILENAME: 8127A10-6232-M313.dwg

LAST UPDATED: 01/26/2012 12:52 PM

LAST SAVED BY: trea

No.	DATE	REVISIONS	APPROVED

DESIGNED: DAH
DRAWN: RCM
CHECKED: TSD

RBF CONSULTING

carollo

IRVINE RANCH WATER DISTRICT

JIM MEYERHOFER	RCE NO. 48451	PROJECT MANAGER	DATE
CINDY MILLER	RCE NO. 58116	PROJECT MANAGER	DATE
PATRICIA UEMATSU	RCE NO. 36762	PRINCIPAL ENGINEER	DATE

IRVINE RANCH WATER DISTRICT
BAKER WATER TREATMENT PLANT
PROJECT NO. 11218

TREATMENT BUILDING
UV DISINFECTION AREA
SECTION

DRAWING
M313
SHEET
337 OF 632

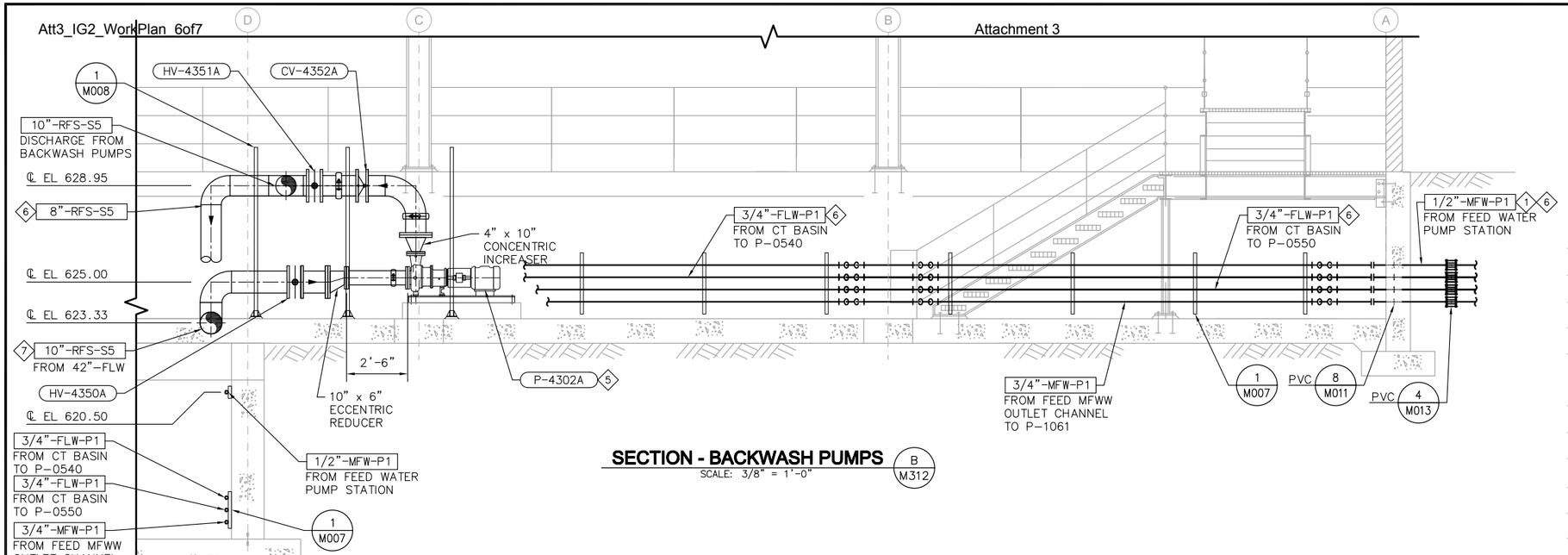

SECTION - BACKWASH PUMPS

SCALE: 3/8" = 1'-0"

B
M312

NOTES

1. REFER TO M001-MECHANICAL NOTES FOR ADDITIONAL INFORMATION AND REQUIREMENTS.
2. WHERE NO CONSTRUCTION DETAILS ARE SHOWN OR NOTED FOR ANY PART OF THE WORK, DETAILS SHALL BE THE SAME AS FOR OTHER SIMILAR WORK.
3. FOR CONTINUATION OF PIPING OUTSIDE OF STRUCTURES, SEE CIVIL DRAWINGS.

KEY NOTES

1. ROUTE TO SAMPLE SINK IN LAB.
2. SEE PLUMBING DRAWINGS FOR DRAIN LOCATION AND PIPING.
3. ROUTE DRAIN PIPING TO NEAREST FLOOR DRAIN, MAINTAIN 6" AIR GAP.
4. UV REACTOR CONTROL PANELS, SEE ELECTRICAL DRAWINGS.
5. ADJUST PUMP BASE DIMENSIONS BASED ON SELECTED PUMP. SEE STRUCTURAL TYPICAL DETAILS FOR REINFORCEMENT REQUIREMENTS. MAINTAIN LENGTH OF STRAIGHT PIPE AS INDICATED.
6. SEE SHEET M300 FOR CONTINUATION TO LABORATORY.
7. ROUTE PIPING ALONG GALLERY WALL AT ELEVATION 623.33.
8. LSH-0501, TSH-0501, FBUVSS.
9. PROVIDE 1" SAMPLE TAP FOR FSL-0501.
10. PROVIDE CLEAR PVC SECTION ON LEVEL SITE INDICATOR.
11. FRP GRATING @ EL 628.0. SEE STRUCTURAL DRAWINGS FOR DETAILS.

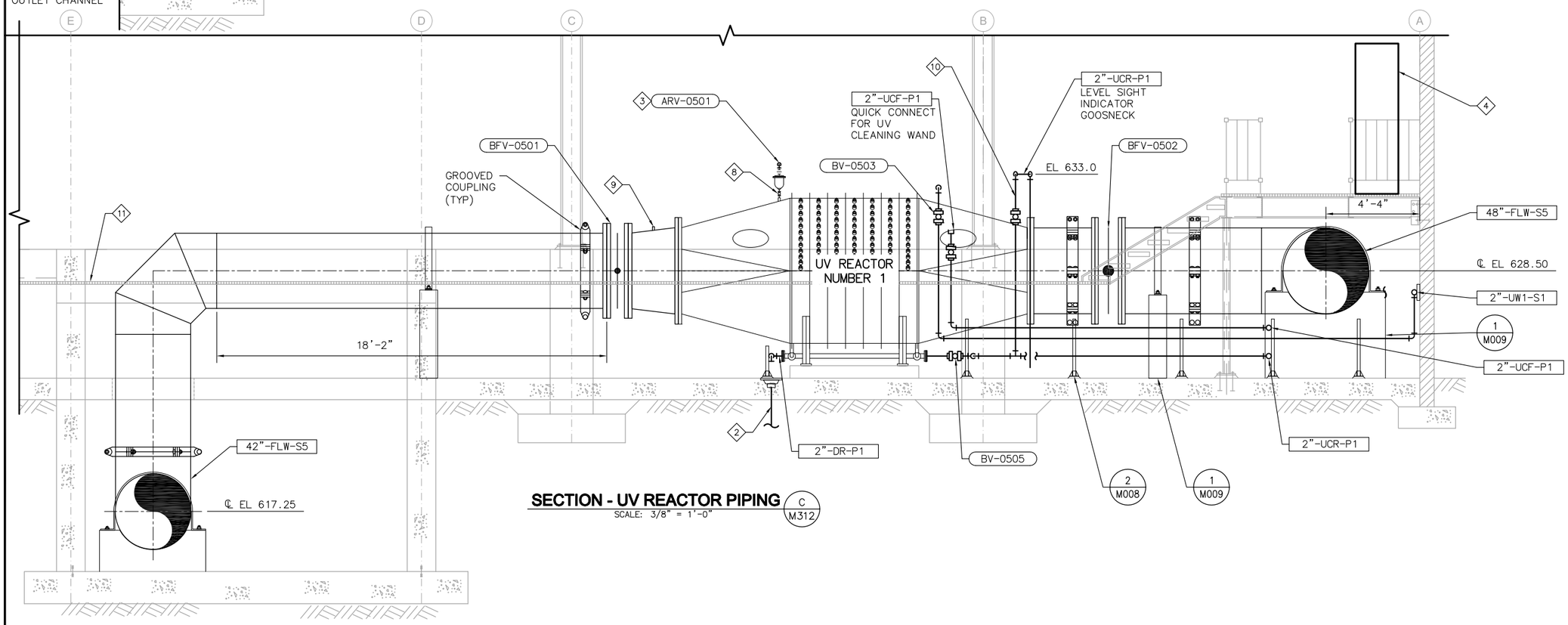

SECTION - UV REACTOR PIPING

SCALE: 3/8" = 1'-0"

C
M312

FILENAME:8127A10-6232-M314.dwg

LAST UPDATED: 01/26/2012 08:37 AM

LAST SAVED BY: trea

No.	DATE	REVISIONS	APPROVED

DESIGNED: DAH
DRAWN: RCM
CHECKED: TSD

RBF CONSULTING

carollo

IRVINE RANCH WATER DISTRICT

JIM MEYERHOFER	RCE NO. 48451	PROJECT MANAGER	DATE
CINDY MILLER	RCE NO. 58116	PROJECT MANAGER	DATE
PATRICIA UEMATSU	RCE NO. 36762	PRINCIPAL ENGINEER	DATE

IRVINE RANCH WATER DISTRICT
BAKER WATER TREATMENT PLANT
PROJECT NO. 11218

TREATMENT BUILDING
UV DISINFECTION AREA
SECTIONS

DRAWING
M314
SHEET
338 OF 632

NOTES

1. REFER TO M001–MECHANICAL NOTES FOR ADDITIONAL INFORMATION AND REQUIREMENTS.
2. WHERE NO CONSTRUCTION DETAILS ARE SHOWN OR NOTED FOR ANY PART OF THE WORK, DETAILS SHALL BE THE SAME AS FOR OTHER SIMILAR WORK.
3. FOR CONTINUATION OF PIPING OUTSIDE OF STRUCTURES, SEE CIVIL DRAWINGS.
4. THIS SHEET SHOWS EQUIPMENT PROVIDED BY PALL INTEGRAL TO THE MEMBRANE SYSTEM. REFER TO BOTH PROJECT AND PALL DRAWINGS (VOLUME 4) FOR PROCESS AND INSTRUMENTATION DRAWINGS FOR THIS AREA.

KEY NOTES

1. SEE PLUMBING DRAWINGS FOR DRAIN LOCATION AND PIPING.
2. COMBINATION AIR/VACUUM VALVE, APCO SERIES 140 (OR EQUAL). ROUTE DRAIN PIPING TO NEAREST FLOOR DRAIN, MAINTAIN 6" AIR GAP. SEE SECTION 15089.
3. AIR RELEASE VALVE, APCO SERIES 200A (OR EQUAL). ROUTE DRAIN PIPING TO NEAREST FLOOR DRAIN, MAINTAIN 6" AIR GAP. SEE SECTION 15089.

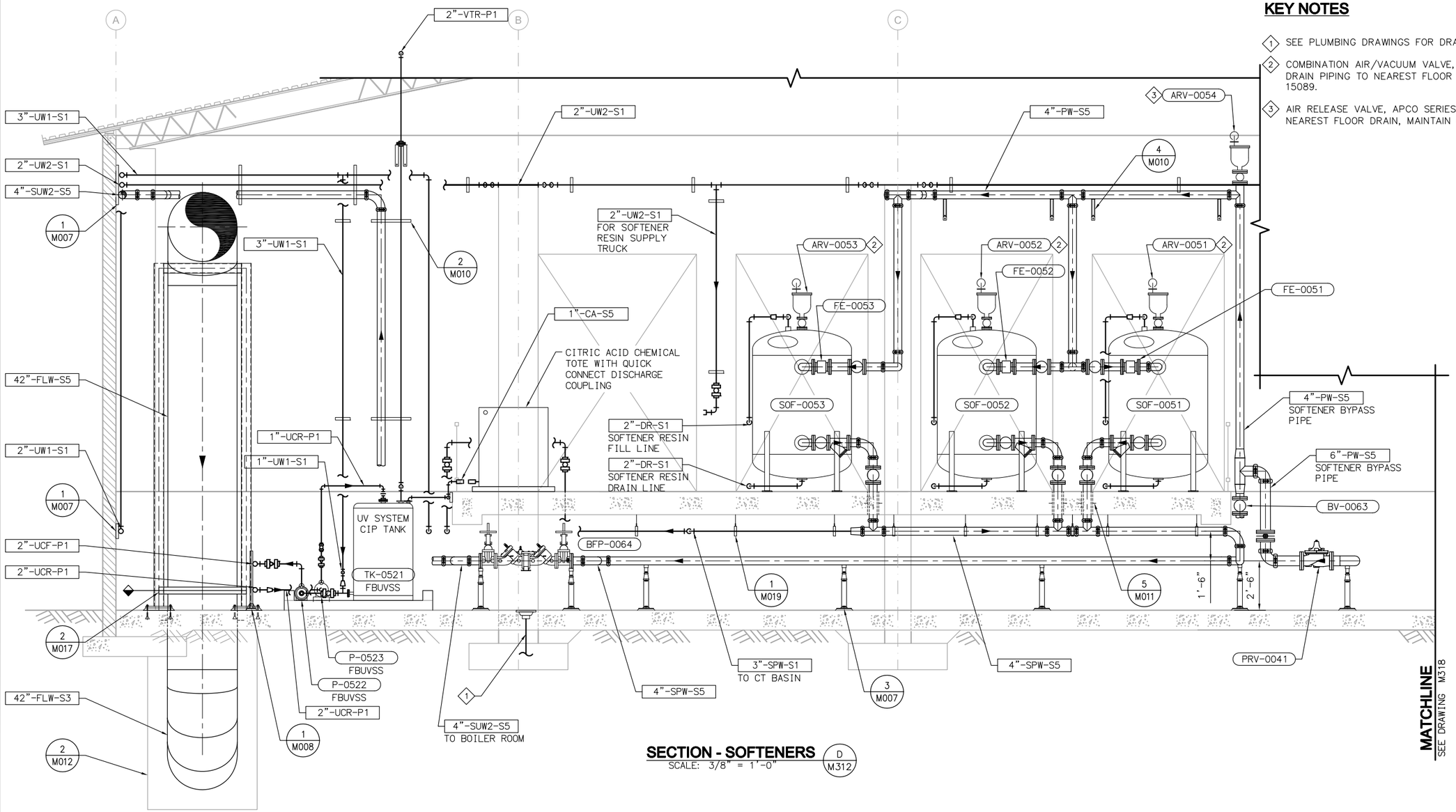

SECTION - SOFTENERS (D / M312)
SCALE: 3/8" = 1'-0"

MATCHLINE
SEE DRAWING M318

FILENAME: 8127A10-6232-M315.dwg
LAST UPDATED: 01/26/2012 11:39 AM
LAST SAVED BY: trea

No.	DATE	REVISIONS	APPROVED

DESIGNED: DAH
DRAWN: RCM
CHECKED: TSD

RBF CONSULTING
carollo
IRVINE RANCH WATER DISTRICT

JIM MEYERHOFER	RCE NO. 48451	PROJECT MANAGER	DATE
CINDY MILLER	RCE NO. 58116	PROJECT MANAGER	DATE
PATRICIA UEMATSU	RCE NO. 36762	PRINCIPAL ENGINEER	DATE

IRVINE RANCH WATER DISTRICT
BAKER WATER TREATMENT PLANT
PROJECT NO. 11218

TREATMENT BUILDING
UV DISINFECTION AREA
SECTION

DRAWING M315
SHEET 339 OF 632

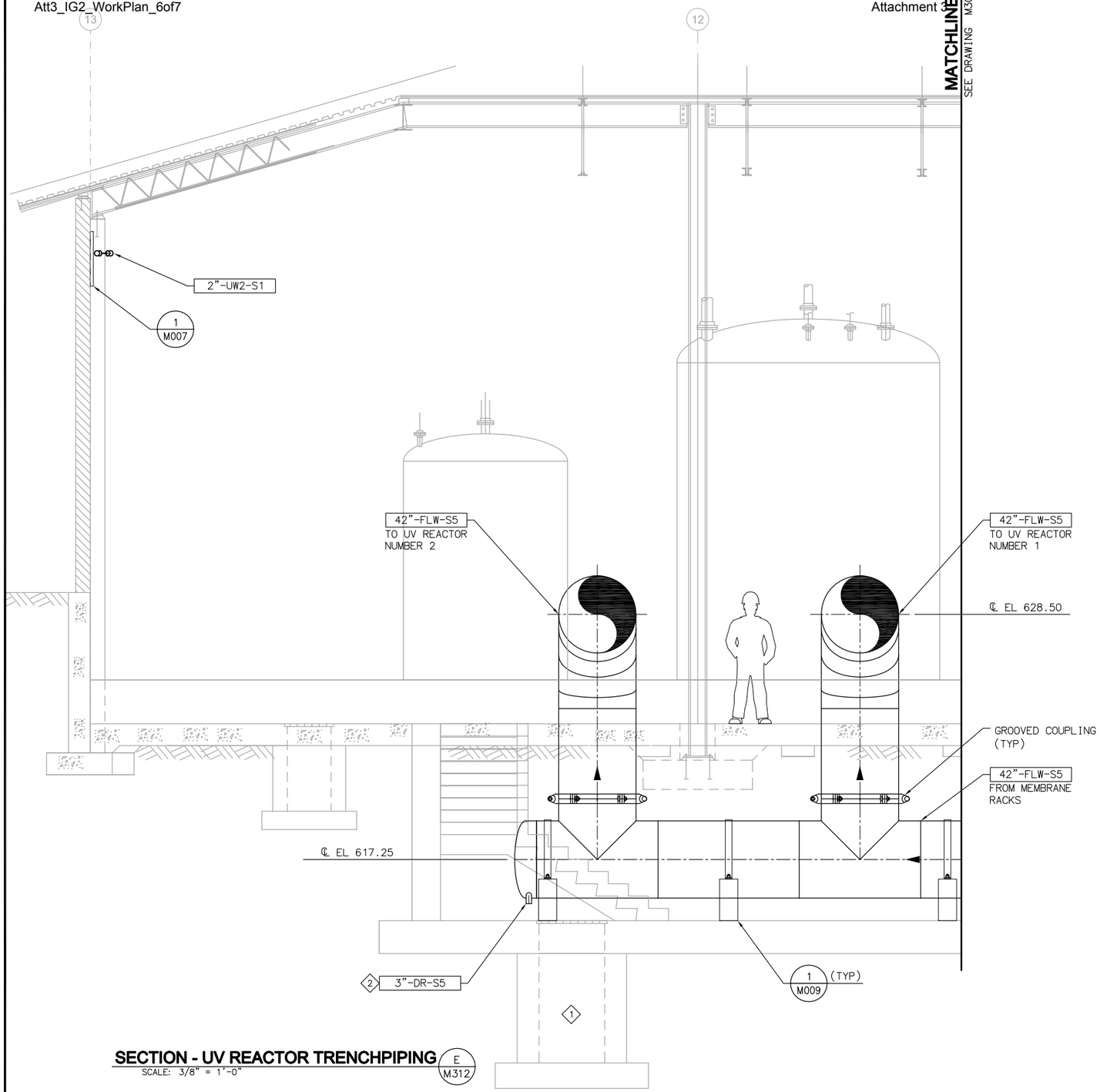

SECTION - UV REACTOR TRENCHPIPING

E
M312

SCALE: 3/8" = 1'-0"

NOTES

SOC WMA

1. REFER TO M001–MECHANICAL NOTES FOR ADDITIONAL INFORMATION AND REQUIREMENTS.
2. WHERE NO CONSTRUCTION DETAILS ARE SHOWN OR NOTED FOR ANY PART OF THE WORK, DETAILS SHALL BE THE SAME AS FOR OTHER SIMILAR WORK.
3. FOR CONTINUATION OF PIPING OUTSIDE OF STRUCTURES, SEE CIVIL DRAWINGS.

KEY NOTES

1. SEE STRUCTURAL DRAWINGS FOR SUMP LOCATION AND PLUMBING DRAWINGS FOR PIPING.
2. 2" SS NPT PIPE CONNECTION.
3. COMBINATION AIR/VACUUM VALVE, APCO SERIES 140 (OR EQUAL). ROUTE DRAIN PIPING TO NEAREST FLOOR DRAIN, MAINTAIN 6" AIR GAP. SEE SECTION 15089.
4. AIR RELEASE VALVE, APCO SERIES 200A (OR EQUAL). ROUTE DRAIN PIPING TO NEAREST FLOOR DRAIN, MAINTAIN 6" AIR GAP. SEE SECTION 15089.

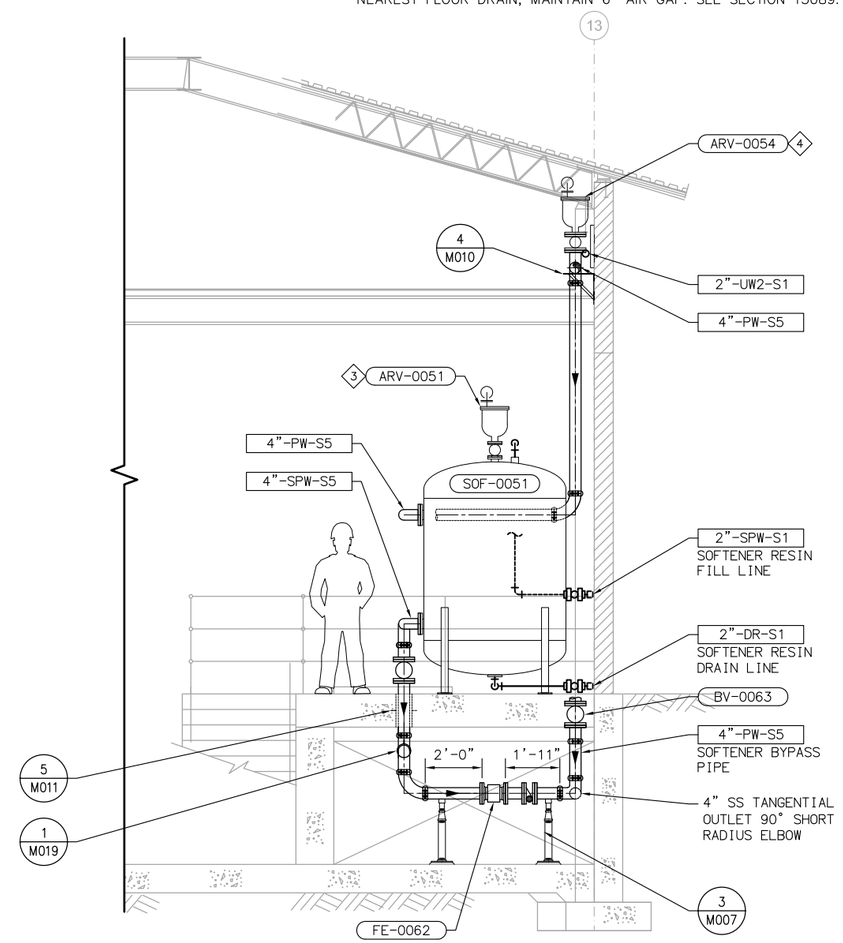

SECTION - SOFTENERS

F
M312

SCALE: 3/8" = 1'-0"

FILENAME:8127A10-6232-M316.dwg

LAST UPDATED: 01/26/2012 08:46 AM

LAST SAVED BY: trea

No.	DATE	REVISIONS	APPROVED

DESIGNED: DAH
DRAWN: RCM
CHECKED: TSD

RBF CONSULTING

carollo

IRVINE RANCH WATER DISTRICT

JIM MEYERHOFER	RCE NO. 48451	PROJECT MANAGER	DATE
CINDY MILLER	RCE NO. 58116	PROJECT MANAGER	DATE
PATRICIA UEMATSU	RCE NO. 36762	PRINCIPAL ENGINEER	DATE

IRVINE RANCH WATER DISTRICT
BAKER WATER TREATMENT PLANT
PROJECT NO. 11218

TREATMENT BUILDING UV DISINFECTION AREA SECTIONS

DRAWING
M316
SHEET
340 OF **632**

SOC WMA

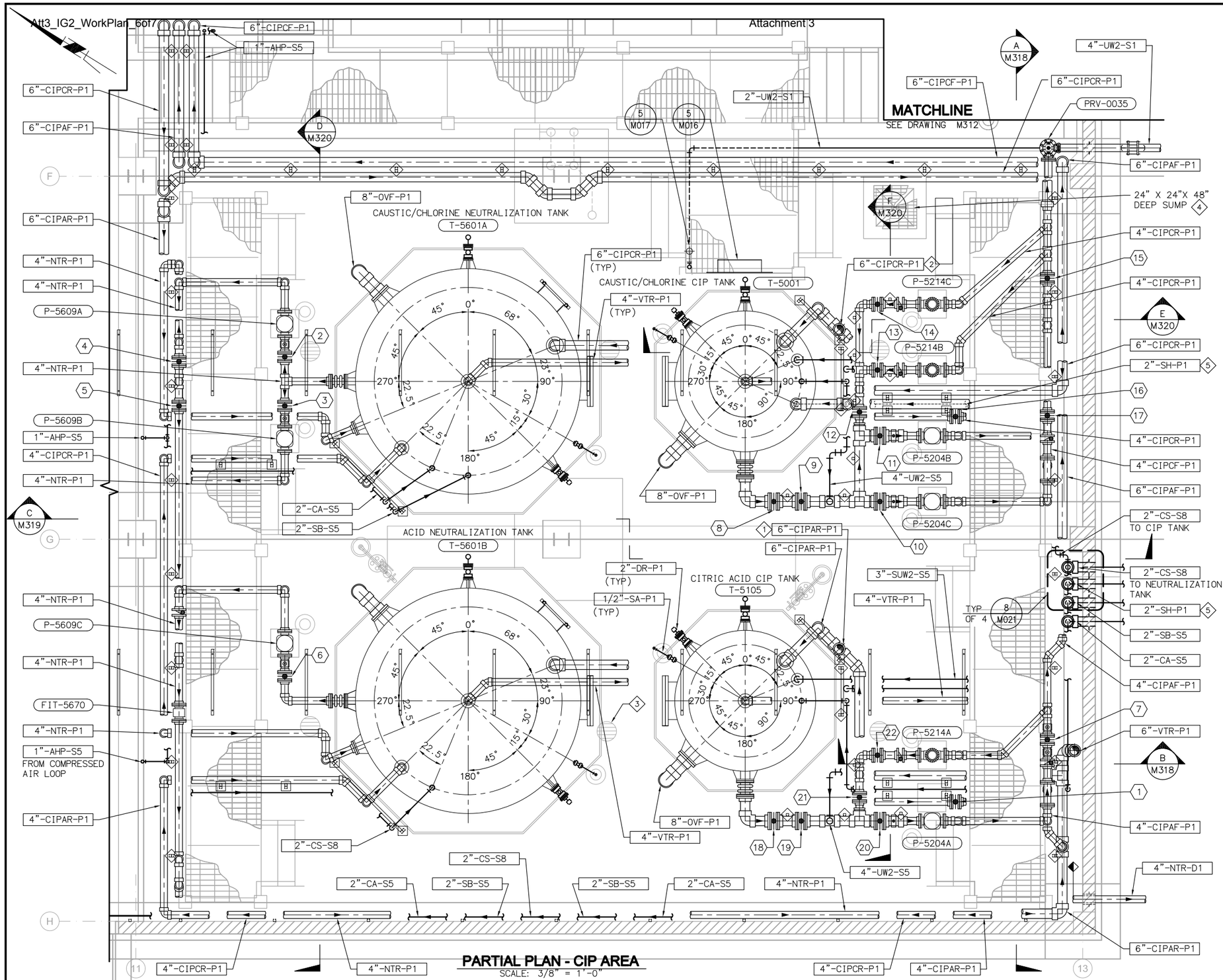

PARTIAL PLAN - CIP AREA

SCALE: 3/8" = 1'-0"

NOTES

1. REFER TO M001 – MECHANICAL NOTES FOR ADDITIONAL INFORMATION AND REQUIREMENTS.
2. FOR CONTINUATION OF PIPING OUTSIDE OF STRUCTURES, SEE CIVIL DRAWINGS.
3. WHERE NO CONSTRUCTION DETAILS ARE SHOWN OR NOTED FOR ANY PART OF THE WORK, DETAILS SHALL BE THE SAME AS FOR OTHER SIMILAR WORK.
4. THIS SHEET SHOWS EQUIPMENT PROVIDED BY PALL INTEGRAL TO THE MEMBRANE SYSTEM. REFER TO BOTH PROJECT AND PALL DRAWINGS (VOLUME 4) FOR PROCESS AND INSTRUMENTATION DRAWINGS FOR THIS AREA.

KEY NOTES

1. ROUTE TO ACID NEUTRALIZATION TANK VIA TRAPEZE.
2. ROUTE TO CAUSTIC/CHLORINE NEUTRALIZATION TANK VIA TRAPEZE.
3. SEE PLUMBING DRAWINGS FOR DRAIN LOCATION AND PIPING.
4. SEE STRUCTURAL DRAWINGS FOR SUMP LOCATION AND PLUMBING DRAWINGS FOR PIPING.
5. DOUBLE–CONTAIN CHEMICAL PIPING. REFER TO SPECIFICATION 15293.
6. PVC TUBING IN 6" PVC CARRIER PIPE.

CONTRACTOR PROVIDED EQUIPMENT TAGS

2	HV-5651A	13	HV-5262B
3	HV-5651B	14	HV-5262C
6	HV-5651C	17	HV-5256C
7	HV-5256B	18	HV-5051
8	HV-5050	22	HV-5262A
12	HV-5289B		

PALL PROVIDED EQUIPMENT TAGS

1	V-5217A	15	V-5291B
4	V-5650A	16	V-5217B
5	V-5607A	19	V-5132
9	V-5025	20	V-5282A
10	V-5282C	21	V-5289A
11	V-5282B		
12	HV-5289B		

FILENAME:8127A10-6232-M317.dwg
LAST UPDATED: 01/26/2012 01:24 PM
LAST SAVED BY: trea

No.	DATE	REVISIONS	APPROVED

DESIGNED: DAH
DRAWN: RCM
CHECKED: TSD

RBF CONSULTING
carollo
IRVINE RANCH WATER DISTRICT

JIM MEYERHOFER	RCE NO. 48451	PROJECT MANAGER	DATE
CINDY MILLER	RCE NO. 58116	PROJECT MANAGER	DATE
PATRICIA UEMATSU	RCE NO. 36762	PRINCIPAL ENGINEER	DATE

IRVINE RANCH WATER DISTRICT
BAKER WATER TREATMENT PLANT
PROJECT NO. 11218

TREATMENT BUILDING
CIP AREA
ENLARGED PLAN

DRAWING M317
SHEET 341 OF 632

CONTRACTOR PROVIDED EQUIPMENT TAGS

1	HV-5262A	13	HV-5256C
2	HV-5261A	16	HV-5256B
5	HV-5256B	20	HV-5261B
		21	HV-5261C

PALL PROVIDED EQUIPMENT TAGS

3	V-5291A	10	V-5020	17	V-5216B
4	V-5290A	11	V-5124	18	V-5291B
6	V-5216A	12	V-5021	19	V-5290B
7	V-5109A	14	V-5454		
8	V-5126	15	V-5009B		
9	V-5511				

NOTES

1. REFER TO M001 – MECHANICAL NOTES FOR ADDITIONAL INFORMATION AND REQUIREMENTS.
2. FOR CONTINUATION OF PIPING OUTSIDE OF STRUCTURES, SEE CIVIL DRAWINGS.
3. WHERE NO CONSTRUCTION DETAILS ARE SHOWN OR NOTED FOR ANY PART OF THE WORK, DETAILS SHALL BE THE SAME AS FOR OTHER SIMILAR WORK.
4. THIS SHEET SHOWS EQUIPMENT PROVIDED BY PALL INTEGRAL TO THE MEMBRANE SYSTEM. REFER TO BOTH PROJECT AND PALL DRAWINGS (VOLUME 4) FOR PROCESS AND INSTRUMENTATION DRAWINGS FOR THIS AREA.

KEY NOTES

1. ROUTE PIPING TO CAUSTIC/CHLORINE NEUTRALIZATION TANK T-5601A.
2. ROUTE PIPING TO ACID NEUTRALIZATION TANK T-5601B.
3. PAINT VENT PIPING EXPOSED TO SUNLIGHT PER SPECIFICATION 15293.

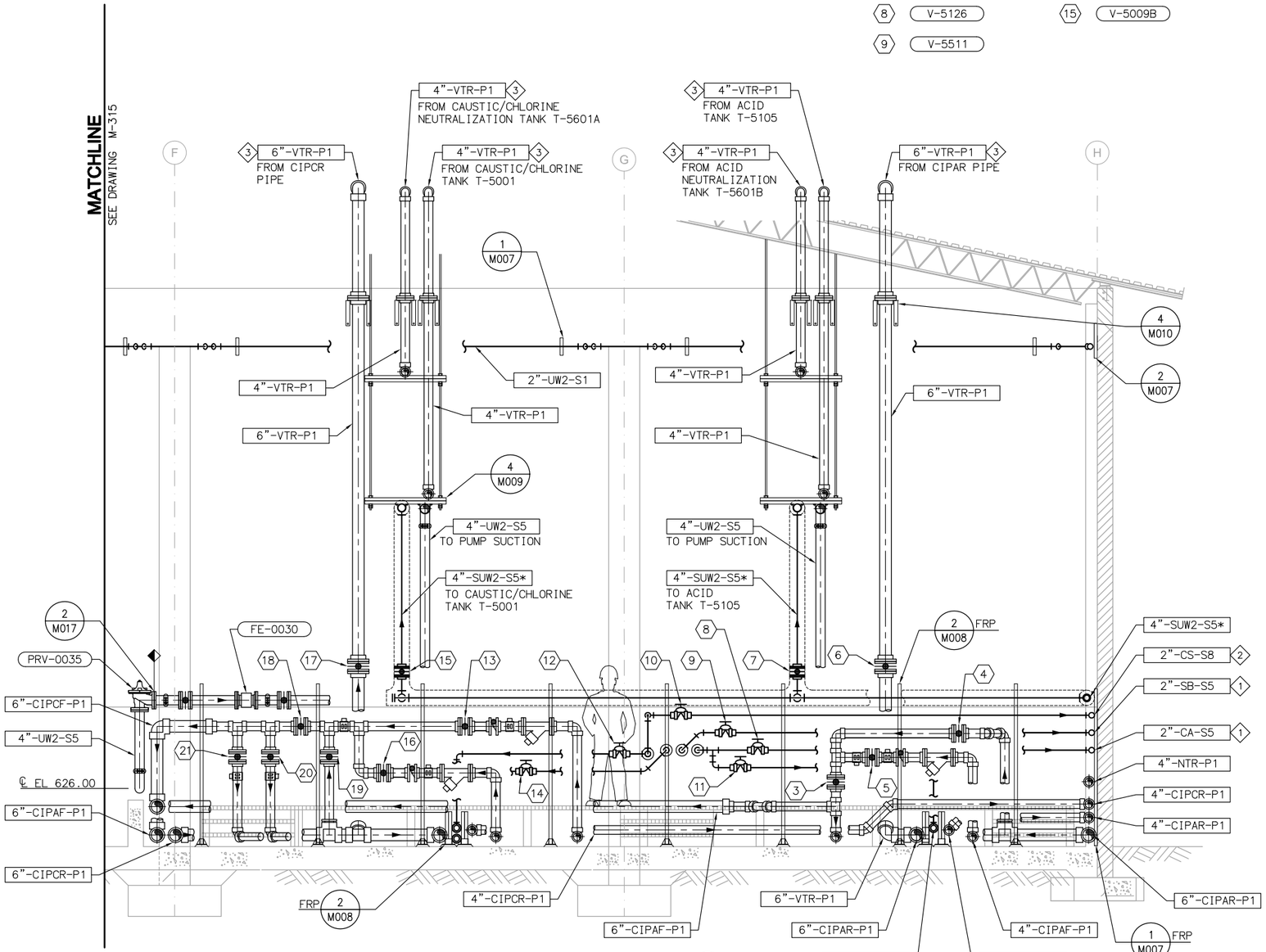

SECTION A M317
SCALE: 3/8" = 1'-0"

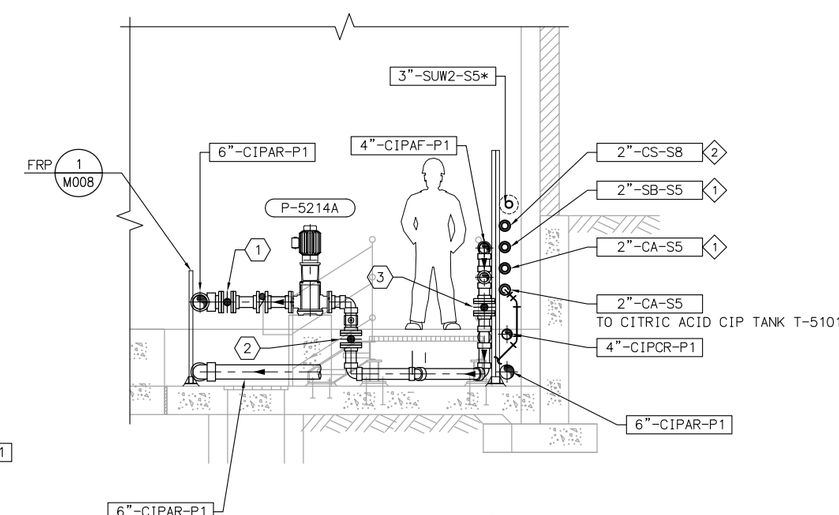

SECTION B M317
SCALE: 3/8" = 1'-0"

No.	DATE	REVISIONS	APPROVED

DESIGNED: DAH
DRAWN: RCM
CHECKED: TSD

RBF CONSULTING

carollo

IRVINE RANCH WATER DISTRICT

JIM MEYERHOFER	RCE NO. 48451	PROJECT MANAGER	DATE
CINDY MILLER	RCE NO. 58116	PROJECT MANAGER	DATE
PATRICIA UEMATSU	RCE NO. 36762	PRINCIPAL ENGINEER	DATE

IRVINE RANCH WATER DISTRICT
BAKER WATER TREATMENT PLANT
PROJECT NO. 11218

TREATMENT BUILDING CIP AREA SECTIONS

DRAWING M318
SHEET 342 OF 632

FILENAME: 8127A10-6232-M318.dwg
LAST UPDATED: 01/26/2012 01:48 PM
LAST SAVED BY: Irea

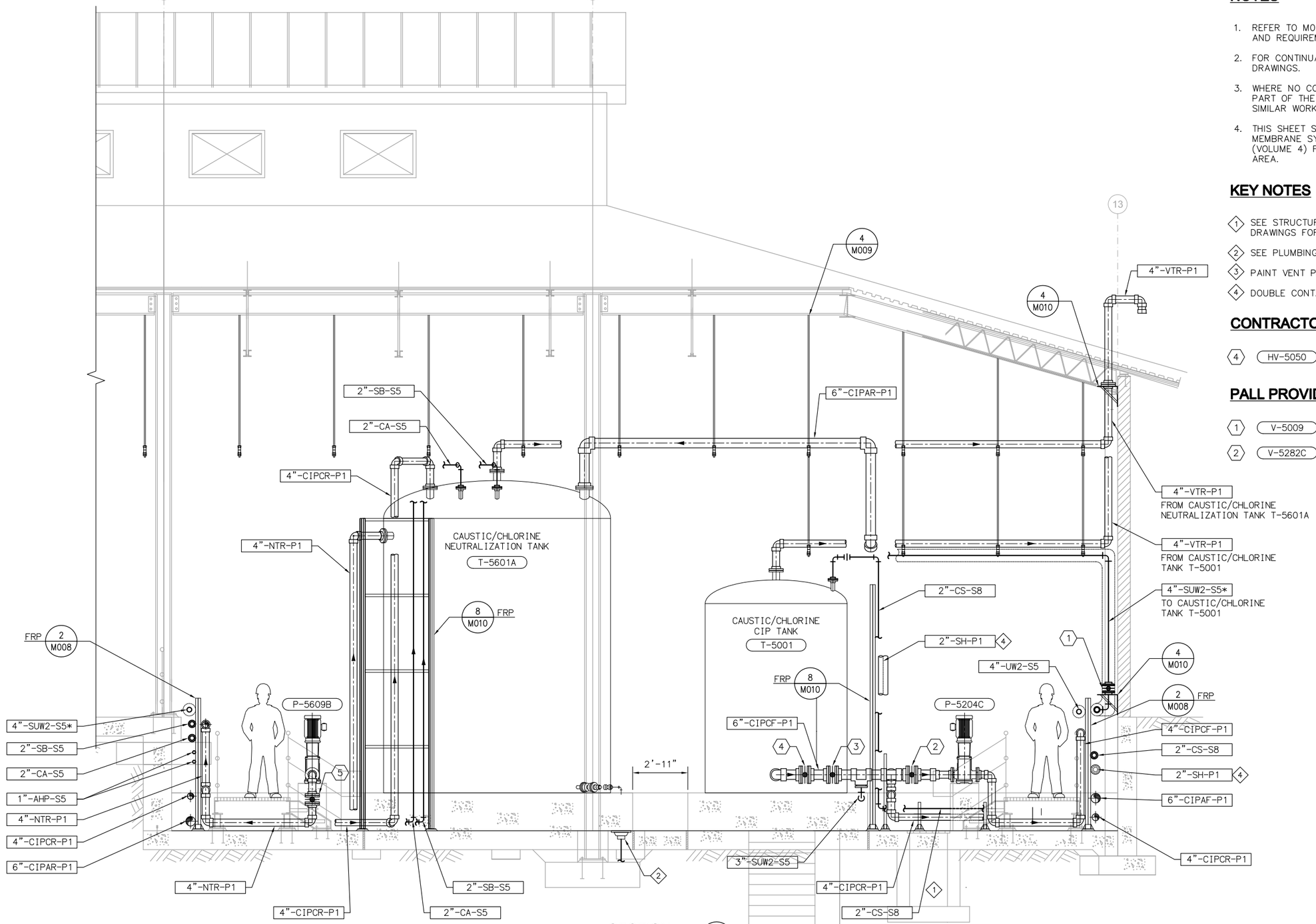

SECTION C / M317

SCALE: 3/8" = 1'-0"

NOTES

1. REFER TO M001 – MECHANICAL NOTES FOR ADDITIONAL INFORMATION AND REQUIREMENTS.
2. FOR CONTINUATION OF PIPING OUTSIDE OF STRUCTURES, SEE CIVIL DRAWINGS.
3. WHERE NO CONSTRUCTION DETAILS ARE SHOWN OR NOTED FOR ANY PART OF THE WORK, DETAILS SHALL BE THE SAME AS FOR OTHER SIMILAR WORK.
4. THIS SHEET SHOWS EQUIPMENT PROVIDED BY PALL INTEGRAL TO THE MEMBRANE SYSTEM. REFER TO BOTH PROJECT AND PALL DRAWINGS (VOLUME 4) FOR PROCESS AND INSTRUMENTATION DRAWINGS FOR THIS AREA.

KEY NOTES

1. SEE STRUCTURAL DRAWINGS FOR SUMP LOCATION AND PLUMBING DRAWINGS FOR PIPING.
2. SEE PLUMBING DRAWINGS FOR DRAIN LOCATION AND PIPING.
3. PAINT VENT PIPING EXPOSED TO SUNLIGHT PER SPECIFICATION 09900.
4. DOUBLE CONTAIN CHEMICAL PIPING. REFER TO SPECIFICATION 15293.

CONTRACTOR PROVIDED EQUIPMENT TAGS

4 HV-5050

5 HV-5625B

PALL PROVIDED EQUIPMENT TAGS

1 V-5009

2 V-5282C

3 V-5025

No.	DATE	REVISIONS	APPROVED

DESIGNED: DAH
DRAWN: RCM
CHECKED: TSD

RBF CONSULTING

carollo

IRVINE RANCH WATER DISTRICT

JIM MEYERHOFER	RCE NO. 48451	PROJECT MANAGER	DATE
CINDY MILLER	RCE NO. 58116	PROJECT MANAGER	DATE
PATRICIA UEMATSU	RCE NO. 36762	PRINCIPAL ENGINEER	DATE

IRVINE RANCH WATER DISTRICT
BAKER WATER TREATMENT PLANT
PROJECT NO. 11218

TREATMENT BUILDING CIP AREA SECTION

DRAWING M319

SHEET 343 OF 632

FILENAME:8127A10-6232-M319.dwg
LAST UPDATED: 01/26/2012 02:44 PM
LAST SAVED BY: treo

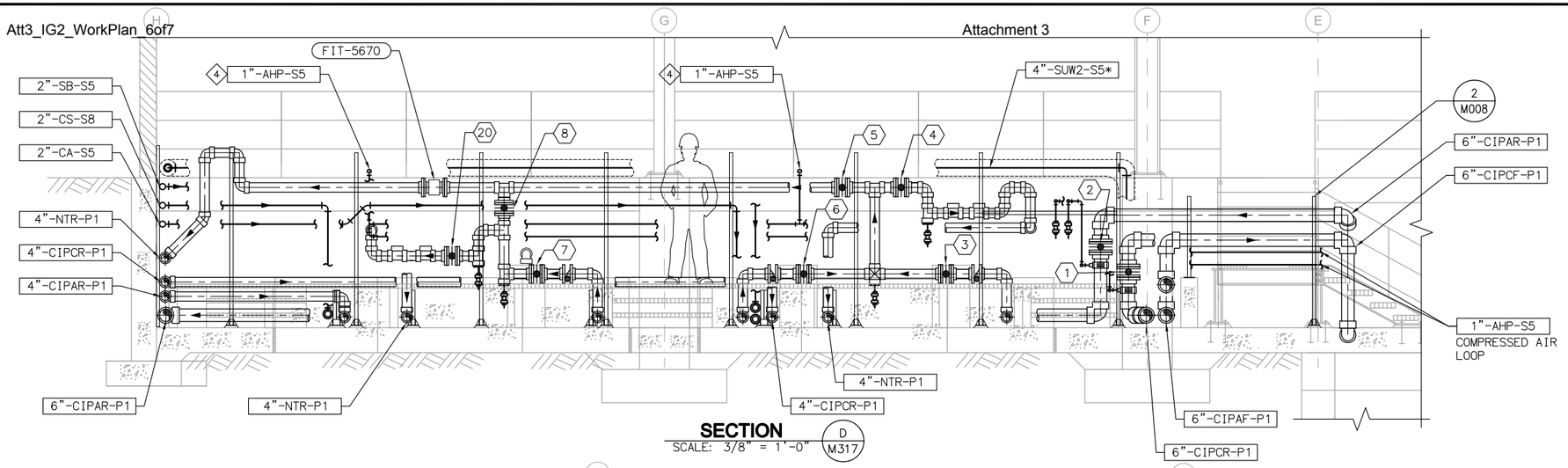

SECTION D M317
SCALE: 3/8" = 1'-0"

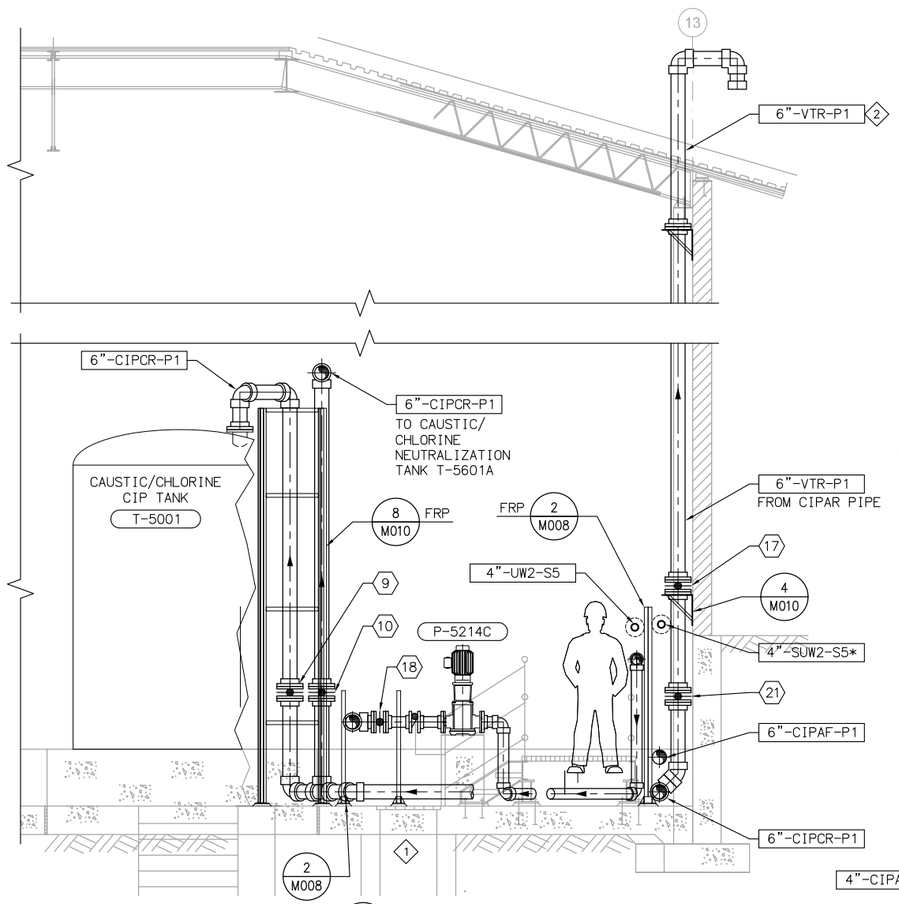

SECTION E M317
SCALE: 3/8" = 1'-0"

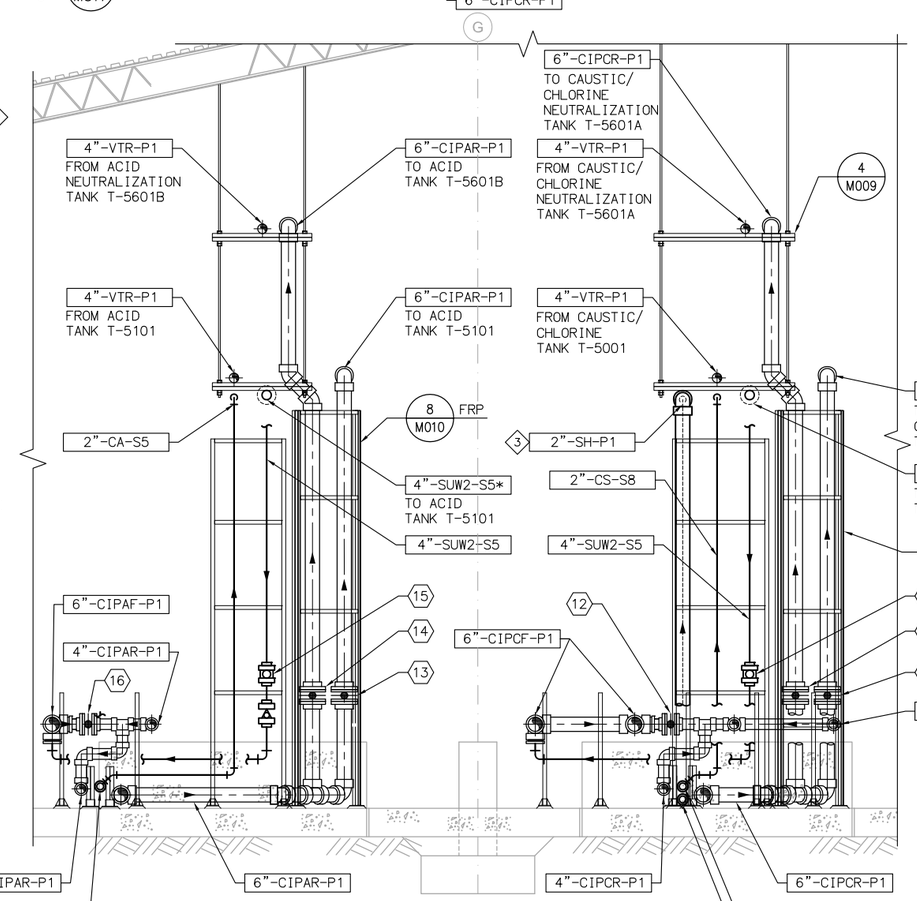

SECTION F M317
SCALE: 3/8" = 1'-0"

NOTES

1. REFER TO M001 – MECHANICAL NOTES FOR ADDITIONAL INFORMATION AND REQUIREMENTS.
2. FOR CONTINUATION OF PIPING OUTSIDE OF STRUCTURES, SEE CIVIL DRAWINGS.
3. WHERE NO CONSTRUCTION DETAILS ARE SHOWN OR NOTED FOR ANY PART OF THE WORK, DETAILS SHALL BE THE SAME AS FOR OTHER SIMILAR WORK.
4. THIS SHEET SHOWS EQUIPMENT PROVIDED BY PALL INTEGRAL TO THE MEMBRANE SYSTEM. REFER TO BOTH PROJECT AND PALL DRAWINGS (VOLUME 4) FOR PROCESS AND INSTRUMENTATION DRAWINGS FOR THIS AREA.

KEY NOTES

1. SEE STRUCTURAL DRAWINGS FOR SUMP LOCATION AND PLUMBING DRAWINGS FOR PIPING.
2. PAINT VENT PIPING EXPOSED TO SUNLIGHT PER SPECIFICATION 09900.
3. DOUBLE CONTAIN CHEMICAL PIPING. REFER TO SPECIFICATION 15293.
4. CONNECT TO PALL SOLENOID VALVE MANIFOLD.

CONTRACTOR PROVIDED EQUIPMENT TAGS

3	HV-5652A	12	HV-5289B
6	HV-5652B	16	HV-5289A
7	HV-5652C	18	HV-5262C

PALL PROVIDED EQUIPMENT TAGS

1	V-5292B	8	V-5682B	15	V-5227A
2	V-5292A	9	V-5313	17	V-5216B
4	V-5650A	10	V-5217B	19	NOT USED
5	V-5607A	11	V-5227B	20	V-5650B
		13	V-5212	21	V-5290B
		14	V-5242A		

FILENAME: 8127A10-6232-M320.dwg
LAST UPDATED: 01/26/2012 01:24 PM
LAST SAVED BY: trea

No.	DATE	REVISIONS	APPROVED

DESIGNED: DAH
DRAWN: RCM
CHECKED: TSD

RBF CONSULTING
carollo
IRVINE RANCH WATER DISTRICT

JIM MEYERHOFER	RCE NO. 48451	PROJECT MANAGER	DATE
CINDY MILLER	RCE NO. 58116	PROJECT MANAGER	DATE
PATRICIA UEMATSU	RCE NO. 36762	PRINCIPAL ENGINEER	DATE

IRVINE RANCH WATER DISTRICT
BAKER WATER TREATMENT PLANT
PROJECT NO. 11218

TREATMENT BUILDING CIP AREA SECTIONS

DRAWING **M320**
SHEET **344** OF **632**

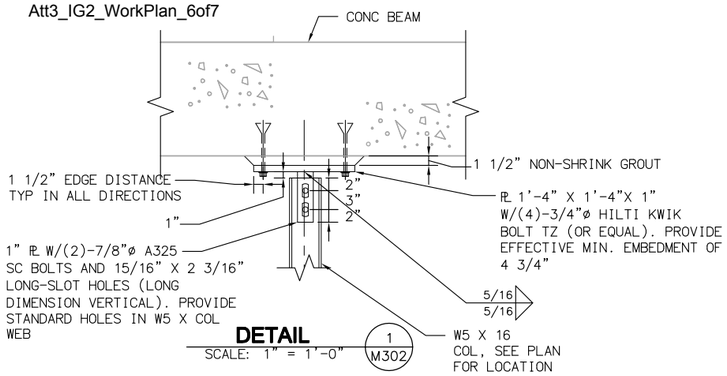

DETAIL 1 M302
SCALE: 1" = 1'-0"

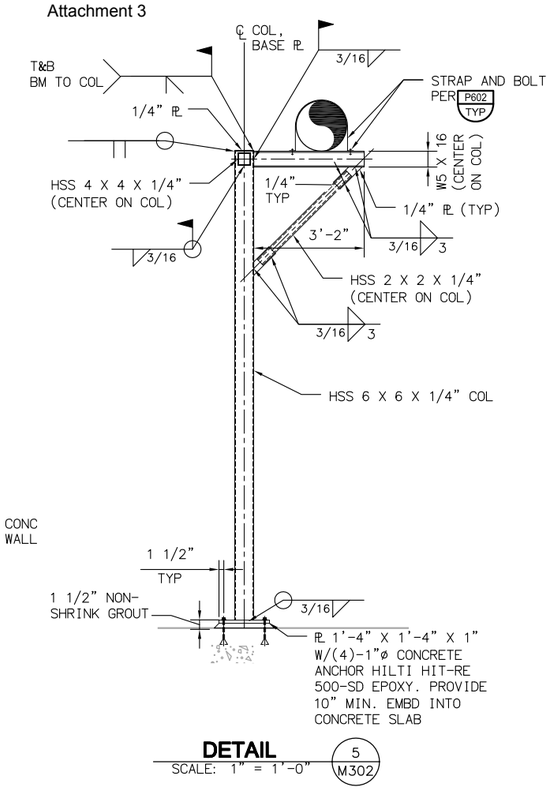

DETAIL 5 M302
SCALE: 1" = 1'-0"

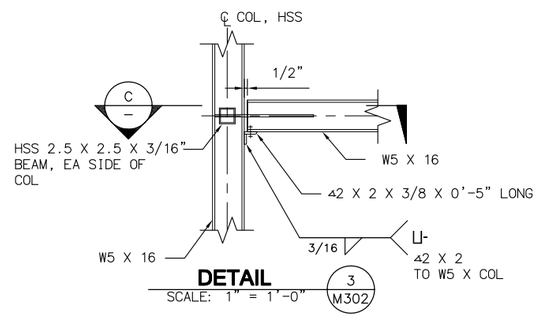

DETAIL 3 M302
SCALE: 1" = 1'-0"

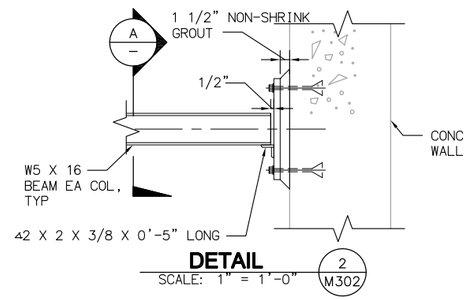

DETAIL 2 M302
SCALE: 1" = 1'-0"

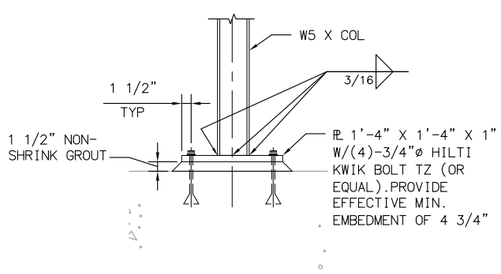

DETAIL 4 M302
SCALE: 1" = 1'-0"

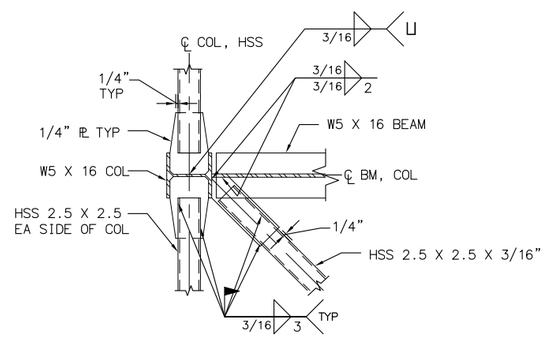

SECTION C
SCALE: N.T.S

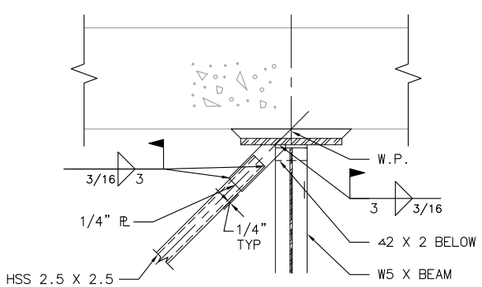

SECTION B
SCALE: 1" = 1'-0"

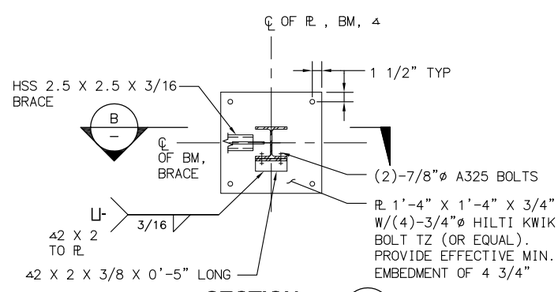

SECTION A
SCALE: 1" = 1'-0"

LAST SAVED BY: treq
LAST UPDATED: 01/05/2012 10:26 AM
FILENAME:8127A10-6232-M321.dwg

No.	DATE	REVISIONS	APPROVED

DESIGNED: DAH
DRAWN: RCM
CHECKED: TSD

RBF CONSULTING

carollo

IRVINE RANCH WATER DISTRICT

JIM MEYERHOFER	RCE NO. 48451	PROJECT MANAGER	DATE
CINDY MILLER	RCE NO. 58116	PROJECT MANAGER	DATE
PATRICIA UEMATSU	RCE NO. 36762	PRINCIPAL ENGINEER	DATE

IRVINE RANCH WATER DISTRICT
BAKER WATER TREATMENT PLANT
PROJECT NO. 11218

TREATMENT BUILDING
MF RACKS AND PIPE GALLERY
SECTIONS AND DETAILS

DRAWING
M321
SHEET

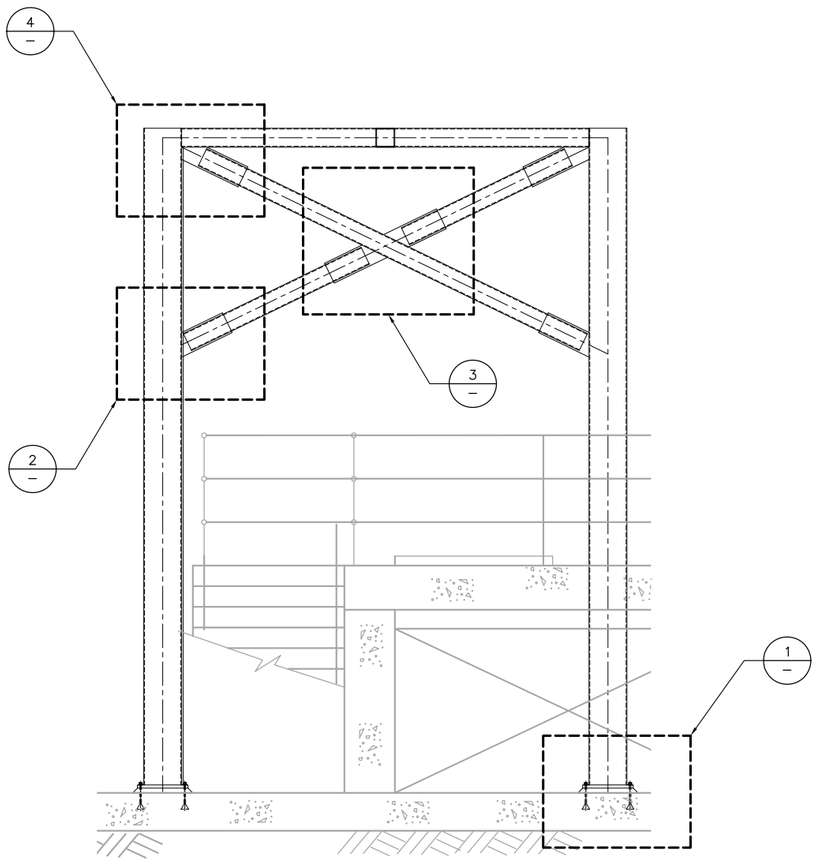

ELEVATION
SCALE: 1/2" = 1'-0"

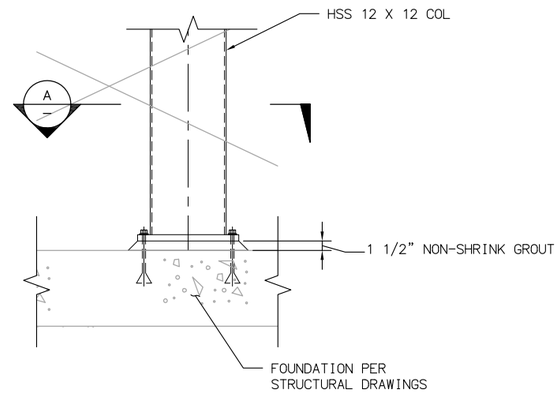

DETAIL 1
SCALE: 1" = 1'-0"

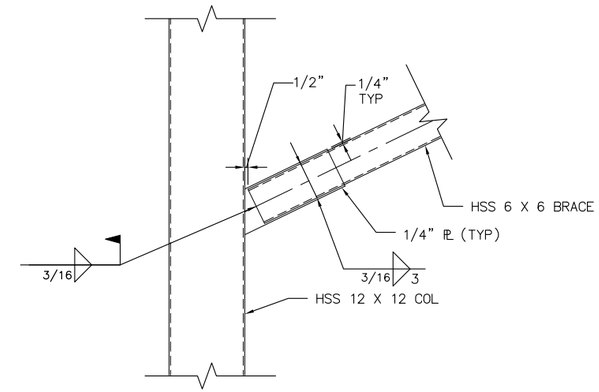

DETAIL 2
SCALE: 1" = 1'-0"

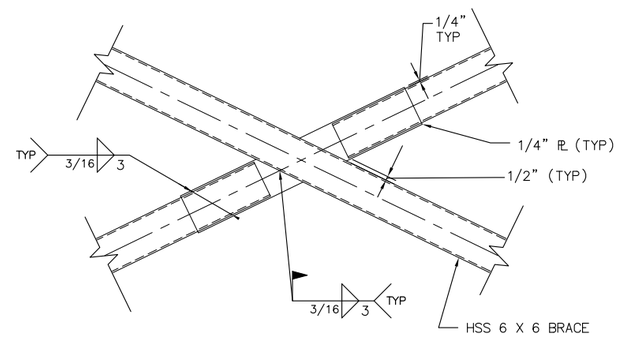

DETAIL 3
SCALE: 1" = 1'-0"

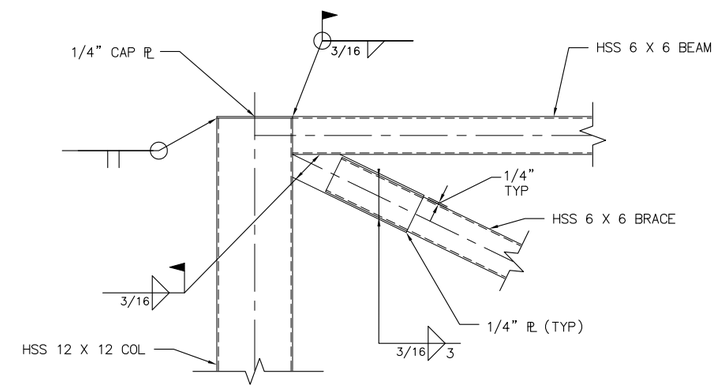

DETAIL 4
SCALE: 1" = 1'-0"
M302

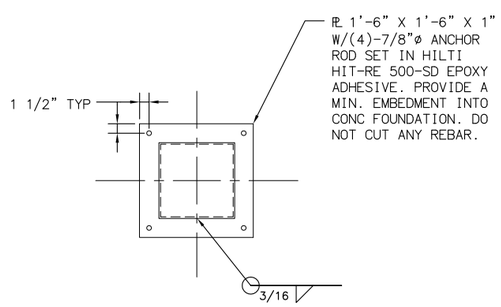

SECTION A
SCALE: 1" = 1'-0"

No.	DATE	REVISIONS	APPROVED

DESIGNED: DAH
DRAWN: RCM
CHECKED: TSD

RBF CONSULTING

carollo

IRVINE RANCH WATER DISTRICT

JIM MEYERHOFER	RCE NO. 48451	PROJECT MANAGER	DATE
CINDY MILLER	RCE NO. 58116	PROJECT MANAGER	DATE
PATRICIA UEMATSU	RCE NO. 36762	PRINCIPAL ENGINEER	DATE

IRVINE RANCH WATER DISTRICT
BAKER WATER TREATMENT PLANT
PROJECT NO. 11218

TREATMENT BUILDING
UV PIPE SUPPORT - ELEVATION SECTIONS AND DETAILS

DRAWING
M322
SHEET
346 OF 632

FILENAME: 8127A10-6232-M322.dwg
LAST UPDATED: 01/05/2012 10:27 AM
LAST SAVED BY: trea

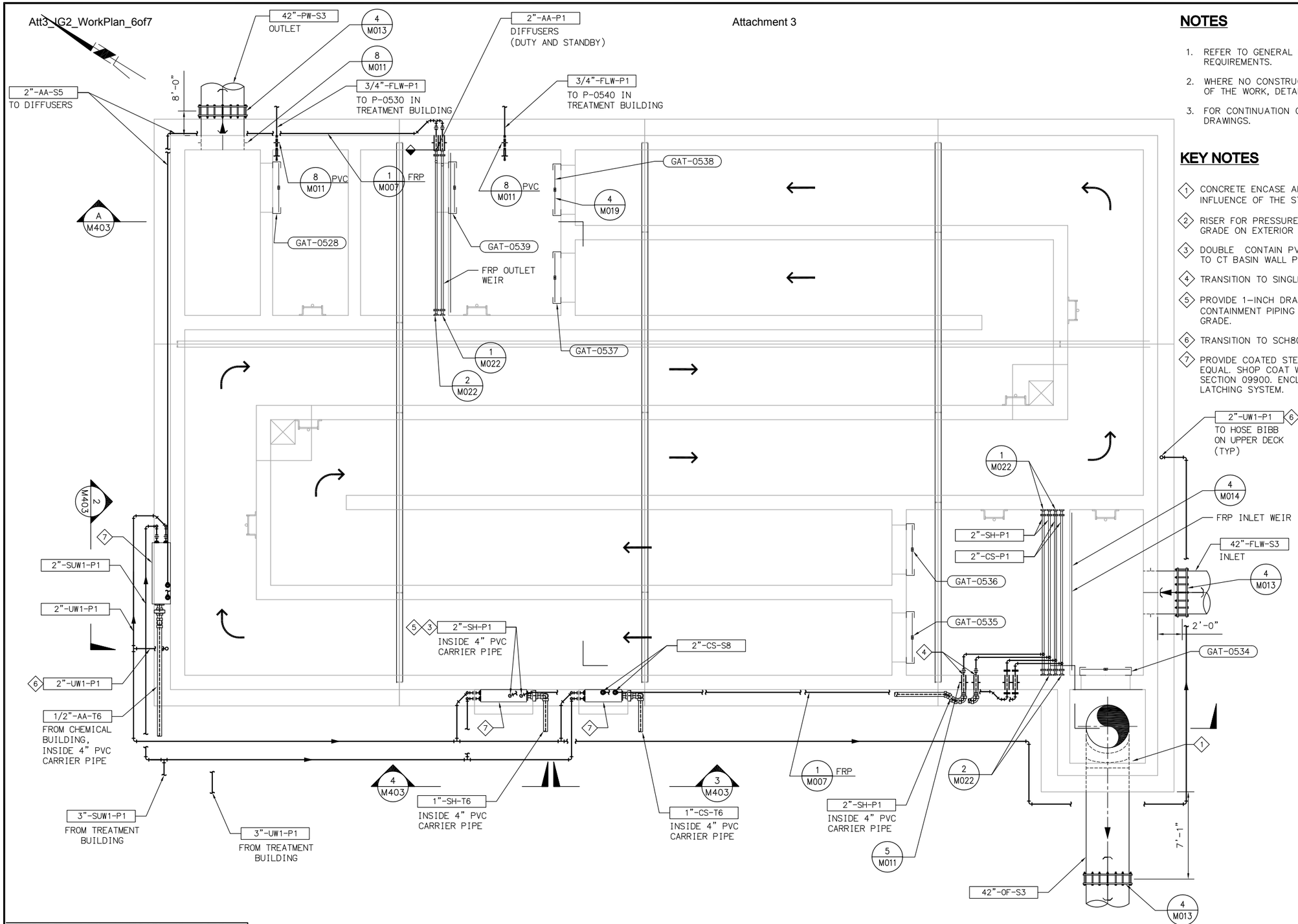

NOTES

1. REFER TO GENERAL MECHANICAL NOTES FOR ADDITIONAL INFORMATION AND REQUIREMENTS.
2. WHERE NO CONSTRUCTION DETAILS ARE SHOWN OR NOTED FOR ANY PART OF THE WORK, DETAILS SHALL BE THE SAME AS FOR OTHER SIMILAR WORK.
3. FOR CONTINUATION OF PIPING OUTSIDE OF STRUCTURES, SEE CIVIL DRAWINGS.

KEY NOTES

1. CONCRETE ENCASE ALL PIPES UNDER STRUCTURE AND UNDER THE CONE OF INFLUENCE OF THE STRUCTURE. PER TYPICAL DETAIL 2/M012.
2. RISER FOR PRESSURE REDUCING VALVE. MOUNT VALVE 3'-0" ABOVE FINISHED GRADE ON EXTERIOR OF CT BASIN WALL USING SS BRACKET AND HARDWARE.
3. DOUBLE CONTAIN PVC CHEMICAL PIPING B/W CARRIER WATER MIXER PANEL TO CT BASIN WALL PENETRATION. REFER TO SPECIFICATION 15293.
4. TRANSITION TO SINGLE WALL PVC PIPING AFTER WALL PENETRATION.
5. PROVIDE 1-INCH DRAIN W/ CLEAR SIGHT GLASS ROUTED FROM LOW POINT OF CONTAINMENT PIPING TO A READILY ACCESSIBLE LOCATION 3'-0" ABOVE GRADE.
6. TRANSITION TO SCH80 GALVANIZED STEEL PIPING ABOVE GROUND.
7. PROVIDE COATED STEEL WALL-MOUNT ENCLOSURE BY ONETAIR-HAFFMAN OR EQUAL. SHOP COAT WITH UV RESISTANT COATING IN ACCORDANCE WITH SECTION 09900. ENCLOSURE SHALL HAVE HINGED FRONT DOOR WITH 3-POINT LATCHING SYSTEM.

EQUIPMENT TAG NUMBERS ON THIS DRAWING ARE PRECEDED W/ 04-CT- UNLESS OTHERWISE LABELED

PLAN BELOW ELEV 637.0

SCALE: 1/4" = 1'-0"

No.	DATE	REVISIONS	APPROVED

DESIGNED: DAH
DRAWN: RCM
CHECKED: TSD

RBF CONSULTING

carollo

IRVINE RANCH WATER DISTRICT

JIM MEYERHOFER	RCE NO. 48451	PROJECT MANAGER	DATE
CINDY MILLER	RCE NO. 58116	PROJECT MANAGER	DATE
PATRICIA UEMATSU	RCE NO. 36762	PRINCIPAL ENGINEER	DATE

IRVINE RANCH WATER DISTRICT
BAKER WATER TREATMENT PLANT
PROJECT NO. 11218

CT BASIN
LOWER PLAN

DRAWING
M401

SHEET
347 OF 632

FILENAME:8127A10-6232-M401.dwg
LAST UPDATED: 01/05/2012 10:28 AM
LAST SAVED BY: trea

NOTES

1. REFER TO GENERAL MECHANICAL NOTES FOR ADDITIONAL INFORMATION AND REQUIREMENTS.
2. WHERE NO CONSTRUCTION DETAILS ARE SHOWN OR NOTED FOR ANY PART OF THE WORK, DETAILS SHALL BE THE SAME AS FOR OTHER SIMILAR WORK.
3. SEE STRUCTURAL DRAWINGS FOR LOCATIONS OF ROOF VENTS AND ACCESS HATCHES.

KEY NOTES

1. TYPE 316 STAINLESS STEEL. SEE STRUCTURAL DRAWINGS FOR DIMENSIONS AND INSTALLATION DETAILS. EXTEND DRAIN TO EXTERIOR 6" ABOVE FINISHED GRADE. END DRAIN WITH A #24 MESH 316 STAINLESS STEEL BUG SCREEN.
2. TYPE 316 STAINLESS STEEL. SEE STRUCTURAL DRAWINGS FOR DIMENSIONS AND INSTALLATION DETAILS. EXTEND DRAIN TO EXTERIOR 6" ABOVE FINISHED GRADE. END DRAIN WITH A #24 MESH 316 STAINLESS STEEL BUG SCREEN.
3. LIT-0527. SEE INSTRUMENTATION DRAWINGS FOR INSTALLATION DETAILS.
4. LIT-0529. SEE INSTRUMENTATION DRAWINGS FOR INSTALLATION DETAILS.
5. LIT-0530. SEE INSTRUMENTATION DRAWINGS FOR INSTALLATION DETAILS.

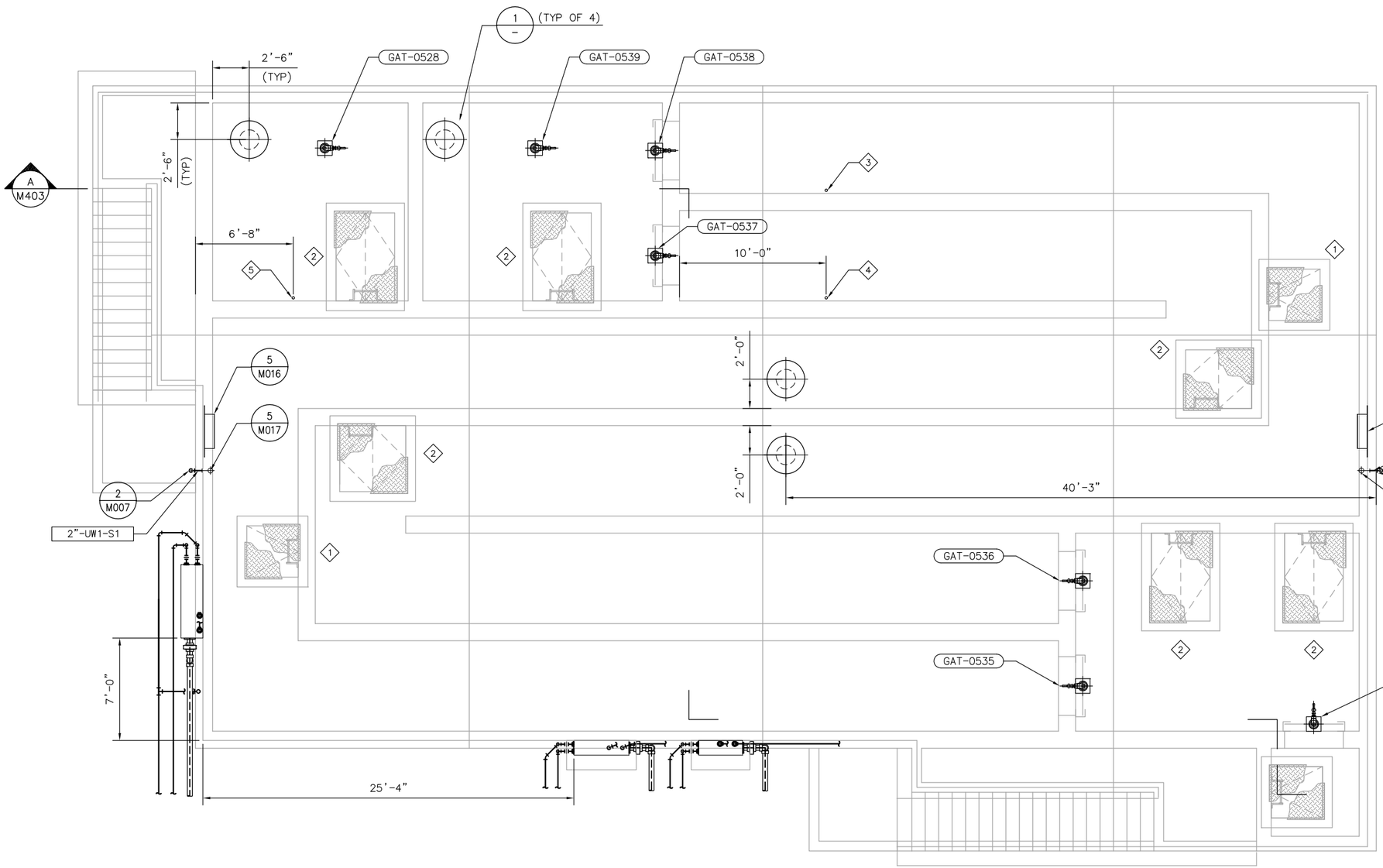

EQUIPMENT TAG NUMBERS ON THIS DRAWING ARE PRECEDED W/ 04-CT- UNLESS OTHERWISE LABELED

PLAN ABOVE ELEV 637.0
SCALE: 1/4" = 1'-0"

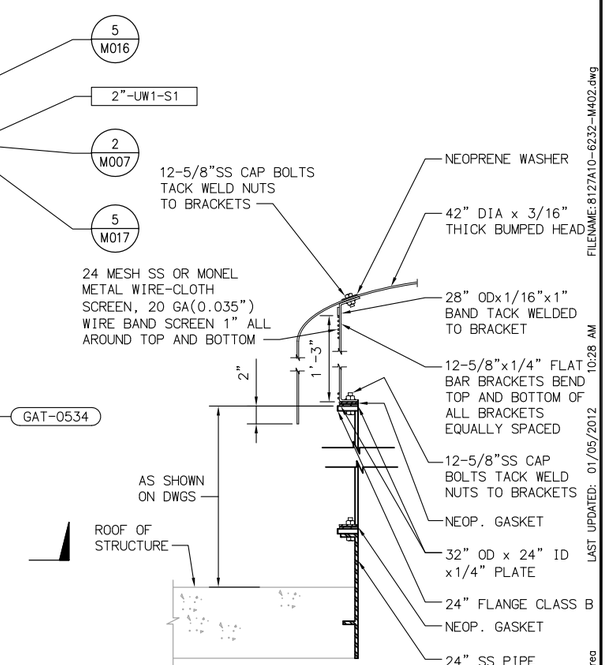

NOTE:
ROOF VENT DETAIL SHALL BE GALV

1 ROOF VENT
SCALE: N.T.S.

FILENAME: 8127A10-6232-M402.dwg
LAST UPDATED: 01/05/2012 10:28 AM
LAST SAVED BY: treo

No.	DATE	REVISIONS	APPROVED

DESIGNED: DAH
DRAWN: RCM
CHECKED: TSD

RBF CONSULTING
carollo
IRVINE RANCH WATER DISTRICT

JIM MEYERHOFER	RCE NO. 48451	PROJECT MANAGER	DATE
CINDY MILLER	RCE NO. 58116	PROJECT MANAGER	DATE
PATRICIA UEMATSU	RCE NO. 36762	PRINCIPAL ENGINEER	DATE

IRVINE RANCH WATER DISTRICT
BAKER WATER TREATMENT PLANT
PROJECT NO. 11218

CT BASIN TOP PLAN

DRAWING M402
SHEET 348 OF 632

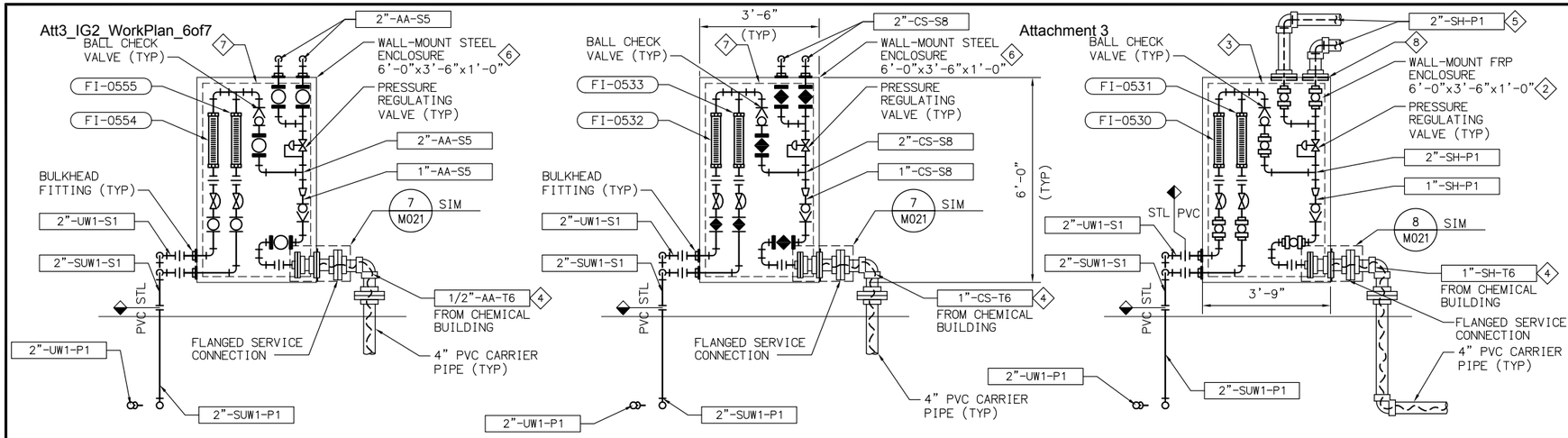

AA CHEMICAL PANEL - DETAIL (2 / M401)
SCALE: N.T.S

CS CHEMICAL PANEL - DETAIL (3 / M401)
SCALE: N.T.S

SH CHEMICAL PANEL - DETAIL (4 / M401)
SCALE: N.T.S

NOTES

1. REFER TO GENERAL MECHANICAL NOTES FOR ADDITIONAL INFORMATION AND REQUIREMENTS.
2. WHERE NO CONSTRUCTION DETAILS ARE SHOWN OR NOTED FOR ANY PART OF THE WORK, DETAILS SHALL BE THE SAME AS FOR OTHER SIMILAR WORK.
3. FOR CONTINUATION OF PIPING OUTSIDE OF STRUCTURES, SEE CIVIL DRAWINGS.

KEY NOTES

1. CONCRETE ENCASE ALL PIPES UNDER STRUCTURE AND UNDER THE CONE OF INFLUENCE OF THE STRUCTURE. PER TYPICAL DETAIL 2/M012.
2. PROVIDE FRP WALL MOUNT ENCLOSURE BY PENTAIR–HOFFMAN OR EQUAL. SHOP COAT WITH UV RESISTANT COATING IN ACCORDANCE WITH SECTION 09900. ENCLOSURE SHALL HAVE HINGED FRONT DOOR WITH 3–POINT LATCHING SYSTEM.
3. PROVIDE FRP BACK PANEL FOR MOUNTING PIPING, VALVES, AND INSTRUMENTS.
4. PROVIDE PVC FLARED TUBING UNION IN 1/2 INCH PVC CHEMICAL TUBING. LOCATE NEAR FLANGED SERVICE CONNECTION IN 3–INCH PVC CARRIER PIPE.
5. DOUBLE CONTAIN PVC CHEMICAL PIPING BETWEEN CARRIER WATER MIXING PANEL AND CT BASIN WALL PENETRATION. REFER TO SPECIFICATION 15293.
6. PROVIDE COATED STEEL WALL–MOUNT ENCLOSURE BY PENTAIR–HOFFMAN OR EQUAL. SHOP COAT WITH UV RESISTANT COATING IN ACCORDANCE WITH SECTION 09900. ENCLOSURE SHALL HAVE HINGED FRONT DOOR WITH 3–POINT LATCHING SYSTEM.
7. PROVIDE COATED STEEL BACK PANEL FOR MOUNTING PIPING, VALVES, AND INSTRUMENTS.
8. DRILL TOP OF CABINET AND BOTTOM OF BLIND FLANGE TO ACCEPT O.D. OF 2–INCH PVC UNION. PROVIDE VITON SEALS BETWEEN FLANGES AND CABINET.

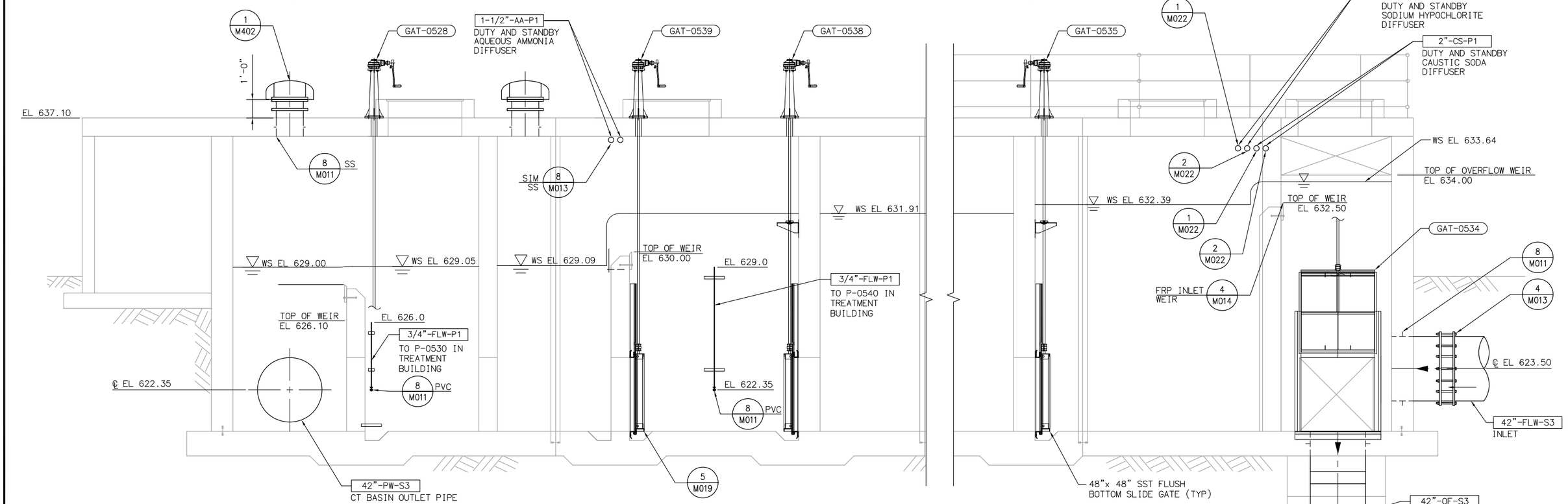

SECTION (A / M401)
SCALE: 3/8" = 1'-0"
M402

EQUIPMENT TAG NUMBERS ON THIS DRAWING ARE PRECEDED W/ **04-CT-** UNLESS OTHERWISE LABELED

No.	DATE	REVISIONS	APPROVED

DESIGNED: DAH
DRAWN: RCM
CHECKED: TSD

RBF CONSULTING
carollo
IRVINE RANCH WATER DISTRICT

JIM MEYERHOFER	RCE NO. 48451	PROJECT MANAGER	DATE
CINDY MILLER	RCE NO. 58116	PROJECT MANAGER	DATE
PATRICIA UEMATSU	RCE NO. 36762	PRINCIPAL ENGINEER	DATE

IRVINE RANCH WATER DISTRICT
BAKER WATER TREATMENT PLANT
PROJECT NO. 11218

CT BASIN SECTION

DRAWING **M403**
SHEET 349 OF 632

FILENAME: 8127A10-6232-M403.dwg
LAST UPDATED: 01/05/2012 10:29 AM
LAST SAVED BY: trea

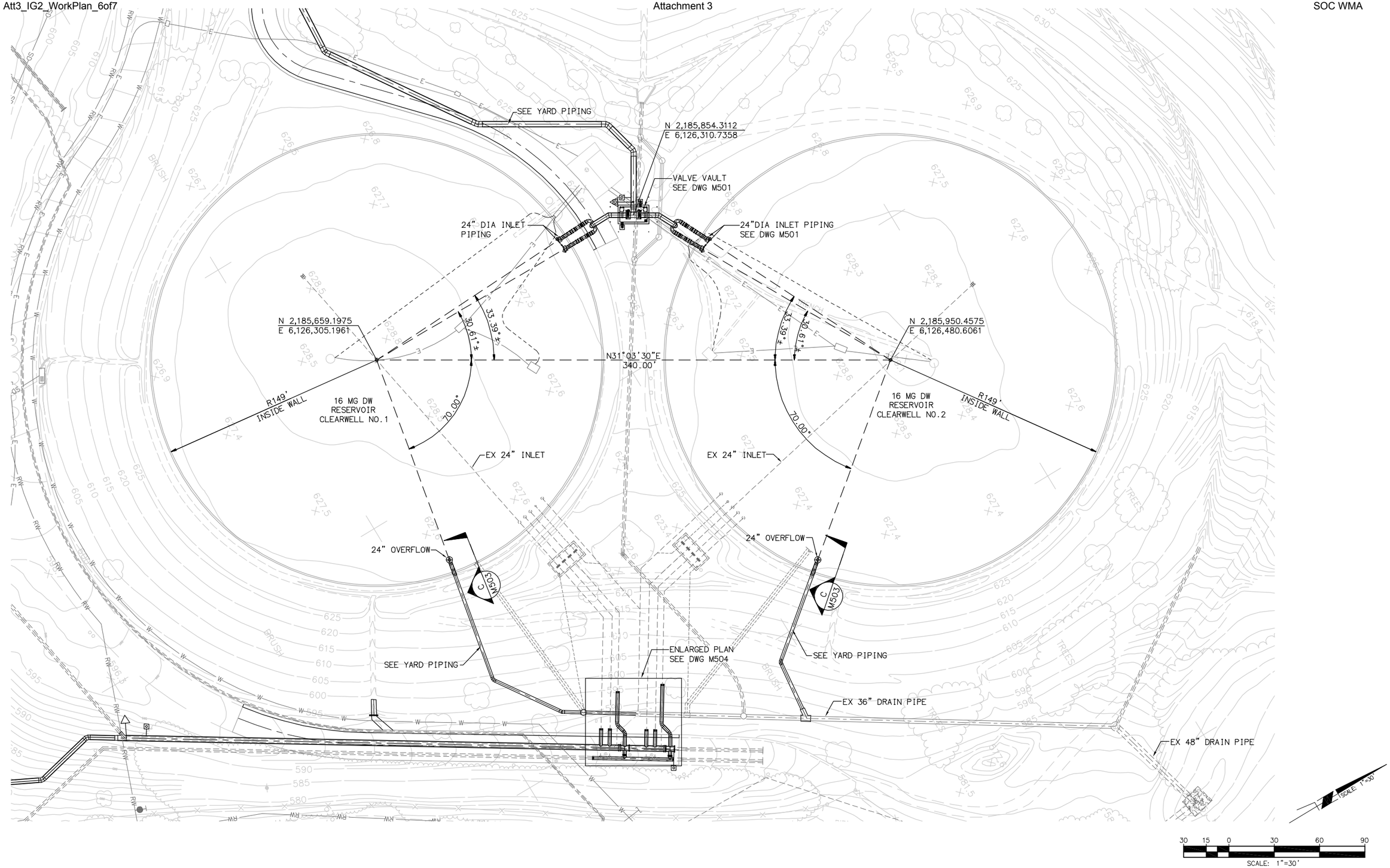

LAST SAVED BY: drujillo LAST UPDATED: 11/22/2011 10:13 AM FILENAME: 6232-M500.dwg

No.	DATE	REVISIONS	APPROVED

DESIGNED: CBH
DRAWN: DDT
CHECKED: CLM

RBF CONSULTING

carollo

IRVINE RANCH WATER DISTRICT

COREY HESS	RCE NO. 68499	PROJECT ENGINEER	DATE
CINDY MILLER	RCE NO. 58116	PROJECT MANAGER	DATE
PATRICIA UEMATSU	RCE NO. 36762	PRINCIPAL ENGINEER	DATE

IRVINE RANCH WATER DISTRICT
BAKER WATER TREATMENT PLANT
PROJECT NO. 11218

PRODUCT WATER CLEARWELLS INLET PIPING MODIFICATIONS MECHANICAL ORIENTATION PLAN

DRAWING **M500**

SHEET **X** OF **632**

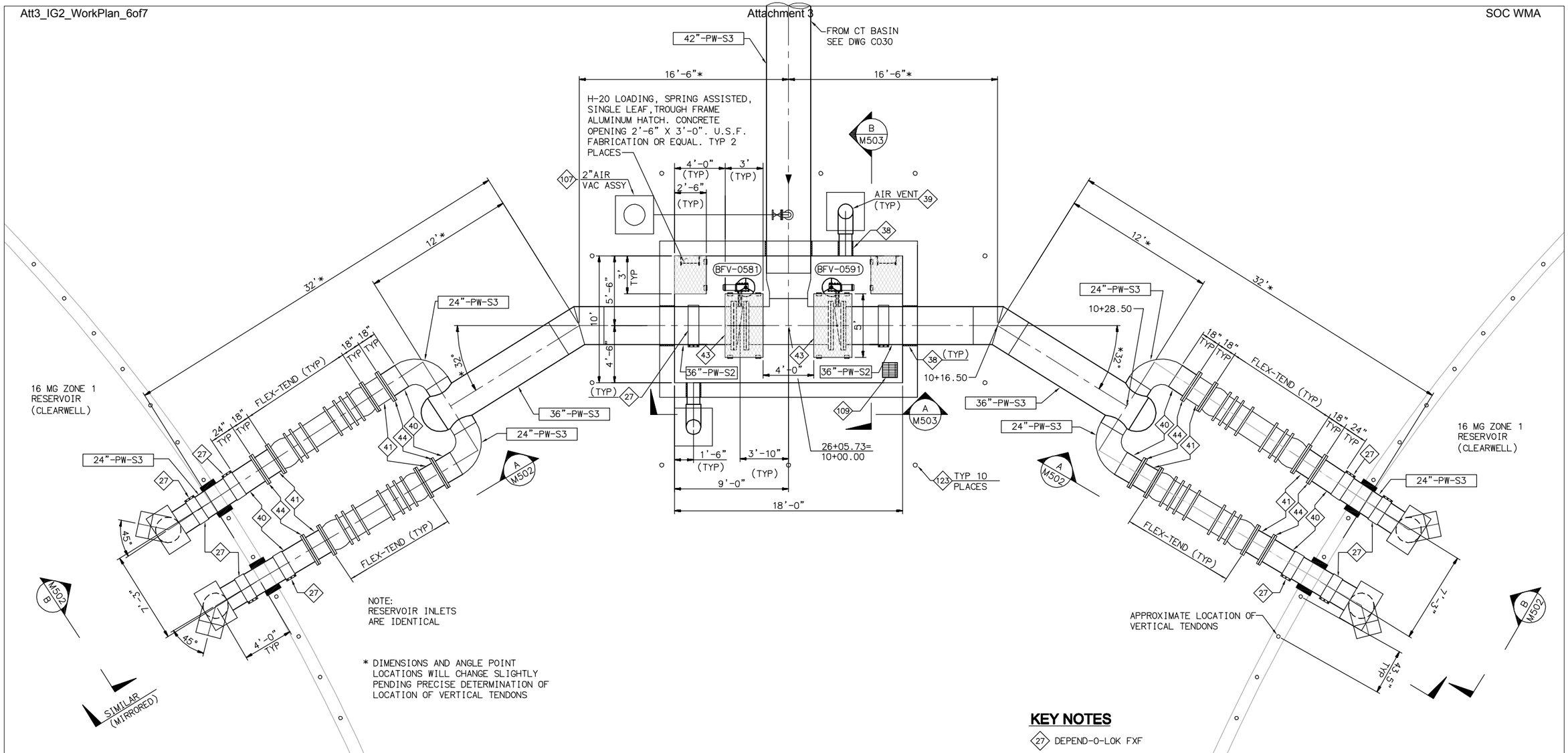

NOTE:
RESERVOIR INLETS
ARE IDENTICAL

* DIMENSIONS AND ANGLE POINT LOCATIONS WILL CHANGE SLIGHTLY PENDING PRECISE DETERMINATION OF LOCATION OF VERTICAL TENDONS

PLAN

SCALE: 1/4" = 1'-0"

KEY NOTES

- 27 DEPEND-O-LOK FXF
- 38 WALL PENETRATION PER IRWD STD. DWG. G-9
- 39 VAULT VENT PER IRWD STD. DWG. G-7
- 40 WELDED STEEL, AWWA C200, MORTAR LINED AND COATED
- 41 FLANGED SPOOL DUCTILE IRON AWWA, C150, PC150, CEMENT MORTAR LINED
- 43 H-20 LOADING, SPRING ASSISTED, DOUBLE LEAF, TROUGH FRAME ALUMINUM HATCH. CONCRETE OPENING 3'-0" X 5'-0". U.S.F. FABRICATION OR EQUAL.
- 44 INSTALL FLANGE INSULATION KIT AND 4-WIRE TEST STATION PER IRWD STD DWG CP-2 AND CP-13
- 107 INSTALL AIR AND VACUUM ASSEMBLY PER IRWD STD. W-11
- 109 VAULT FLOOR SUMP DRAIN TYPE 3 PER IRWD STD. DWG. G-6
- 123 REMOVABLE GUARD POST PER IRWD STD. DWG. G-1

EQUIPMENT TAG NUMBERS ON THIS DRAWING ARE PRECEDED W/ **05-PW-** UNLESS OTHERWISE LABELED

No.	DATE	REVISIONS	APPROVED

DESIGNED: WFM
DRAWN: DDT
CHECKED: CLM

RBF CONSULTING

carollo

IRVINE RANCH WATER DISTRICT

WILLIAM F. McINERNEY	RCE NO. 16084	PROJECT ENGINEER	DATE
CINDY MILLER	RCE NO. 58116	PROJECT MANAGER	DATE
PATRICIA UEMATSU	RCE NO. 36762	PRINCIPAL ENGINEER	DATE

IRVINE RANCH WATER DISTRICT
BAKER WATER TREATMENT PLANT
PROJECT NO. 11218

PRODUCT WATER CLEARWELLS INLET PIPING MODIFICATIONS PLAN VIEW

DRAWING
M501
SHEET
X OF 632

LAST SAVED BY: drujillo LAST UPDATED: 01/18/2012 03:27 PM FILENAME: 6232-M501.dwg

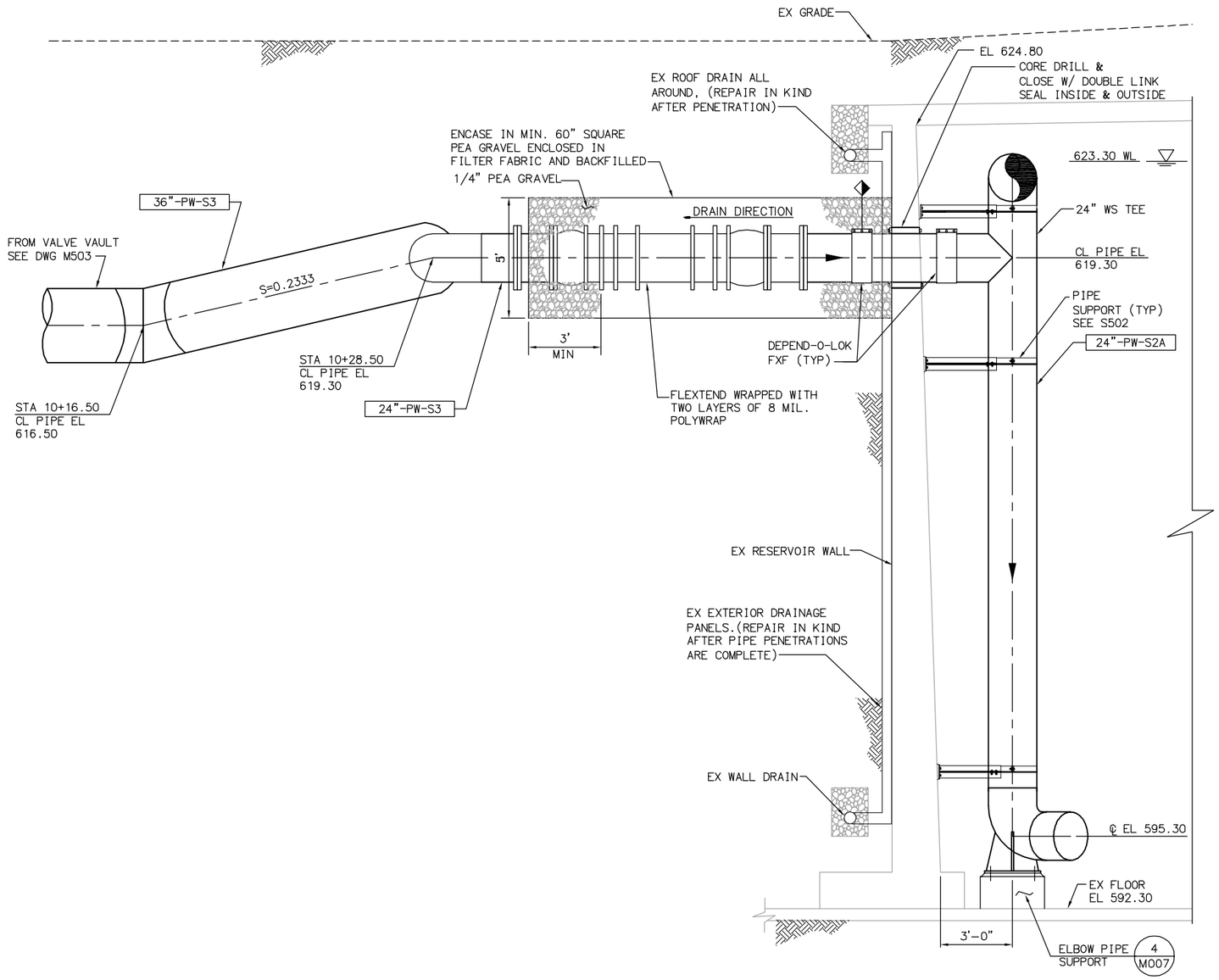

SECTION A / M501
SCALE: 3/8" = 1'-0"

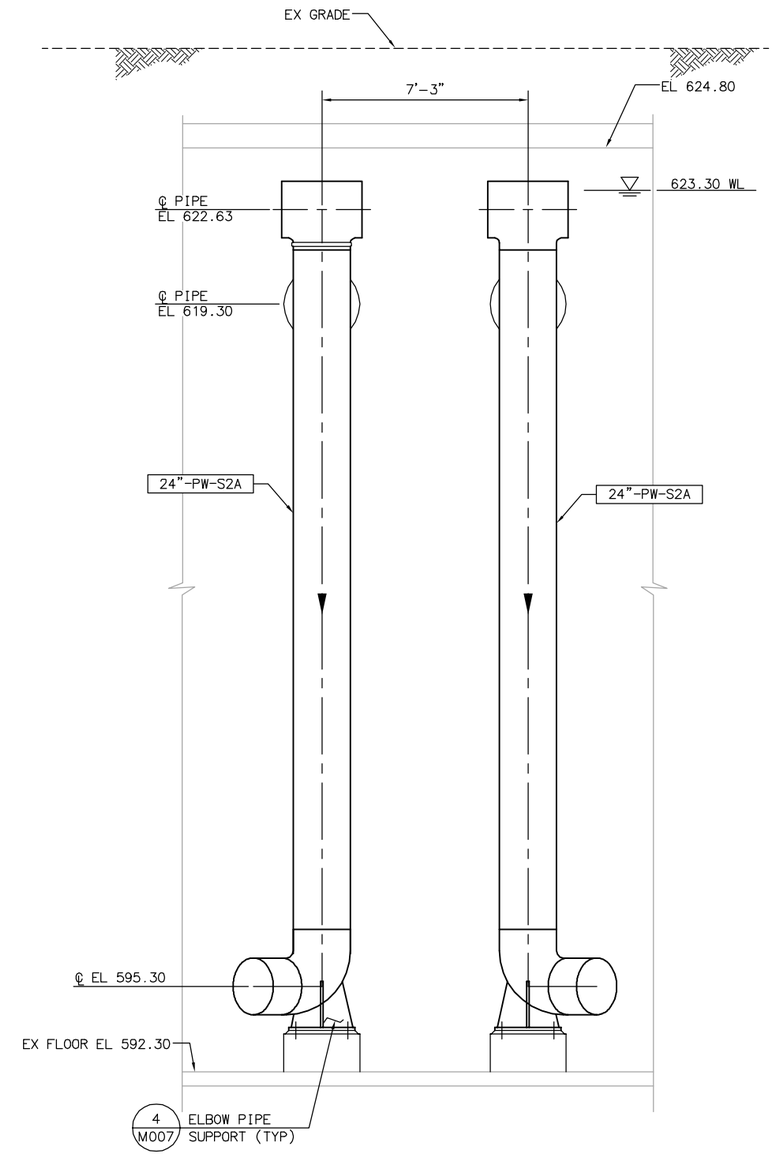

SECTION B / M501
SCALE: 3/8" = 1'-0"

EQUIPMENT TAG NUMBERS ON THIS DRAWING ARE PRECEDED W/ **05-PW-** UNLESS OTHERWISE LABELED

No.	DATE	REVISIONS	APPROVED

DESIGNED: WFM
DRAWN: DDT
CHECKED: CLM

RBF CONSULTING

carollo

IRVINE RANCH WATER DISTRICT

WILLIAM F. McINERNEY	RCE NO. 16084	PROJECT ENGINEER	DATE
CINDY MILLER	RCE NO. 58116	PROJECT MANAGER	DATE
PATRICIA UEMATSU	RCE NO. 36762	PRINCIPAL ENGINEER	DATE

IRVINE RANCH WATER DISTRICT
BAKER WATER TREATMENT PLANT
PROJECT NO. 11218

PRODUCT WATER CLEARWELLS INLET PIPING MODIFICATIONS SECTION VIEW

DRAWING **M502**
SHEET X OF 632

LAST SAVED BY: dtrujillo LAST UPDATED: 01/18/2012 01:55 PM FILENAME: 6232-M502.dwg

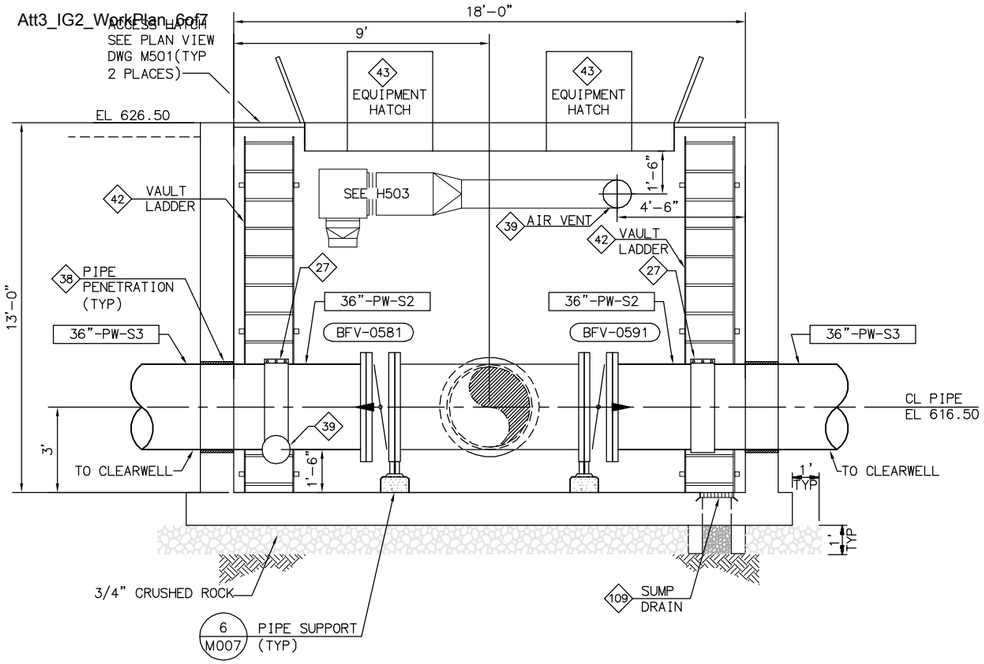

NOTE: AIR VENTS NOT SHOWN FOR CLARITY.

SECTION A M501
SCALE: 3/8" = 1'-0"

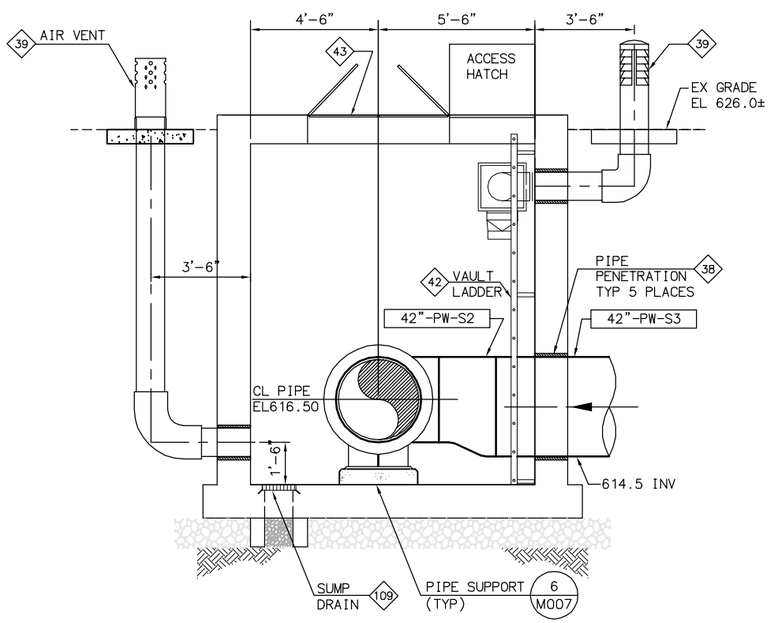

SECTION B M501
SCALE: 3/8" = 1'-0"

KEY NOTES

- 27 DEPEND-O-LOK FXF
- 38 WALL PENETRATION PER IRWD STD. DWG. G-9
- 39 VAULT VENT PER IRWD STD. DWG. G-7
- 42 VAULT LADDER PER IRWD STD DWG G-5
- 43 SPRING ASSISTED, DOUBLE LEAF, TROUGH FRAME ALUMINUM HATCH. CONCRETE OPENING 3'-0" X 5'-0". U.S.F. FABRICATION OR EQUAL.
- 109 VAULT FLOOR SUMP DRAIN TYPE 3 PER IRWD STD. DWG. G-6

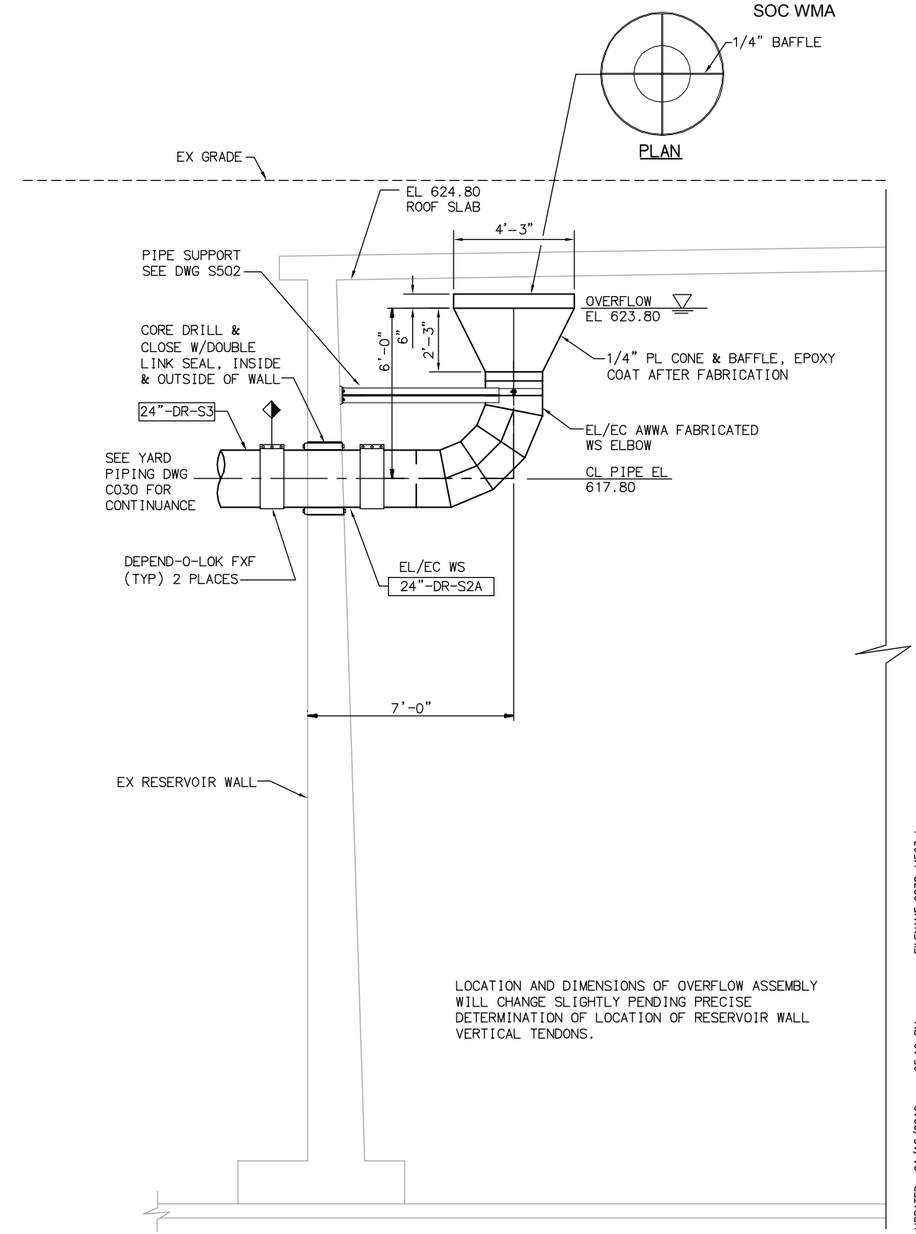

LOCATION AND DIMENSIONS OF OVERFLOW ASSEMBLY WILL CHANGE SLIGHTLY PENDING PRECISE DETERMINATION OF LOCATION OF RESERVOIR WALL VERTICAL TENDONS.

SECTION C M500
SCALE: 3/8" = 1'-0"

EQUIPMENT TAG NUMBERS ON THIS DRAWING ARE PRECEDED W/ **05-PW-** UNLESS OTHERWISE LABELED

No.	DATE	REVISIONS	APPROVED

DESIGNED: WFM
DRAWN: DDT
CHECKED: CLM

RBF CONSULTING

carollo

IRVINE RANCH WATER DISTRICT

WILLIAM F. McINERNEY	RCE NO. 16084	PROJECT ENGINEER	DATE
CINDY MILLER	RCE NO. 58116	PROJECT MANAGER	DATE
PATRICIA UEMATSU	RCE NO. 36762	PRINCIPAL ENGINEER	DATE

IRVINE RANCH WATER DISTRICT
BAKER WATER TREATMENT PLANT
PROJECT NO. 11218

PRODUCT WATER CLEARWELLS INLET PIPING VALVE VAULT OVERFLOW PIPING MODIFICATIONS

DRAWING **M503**
SHEET X OF 632

FILENAME: 6232-M503.dwg
LAST UPDATED: 01/18/2012 05:19 PM
LAST SAVED BY: dtrujillo

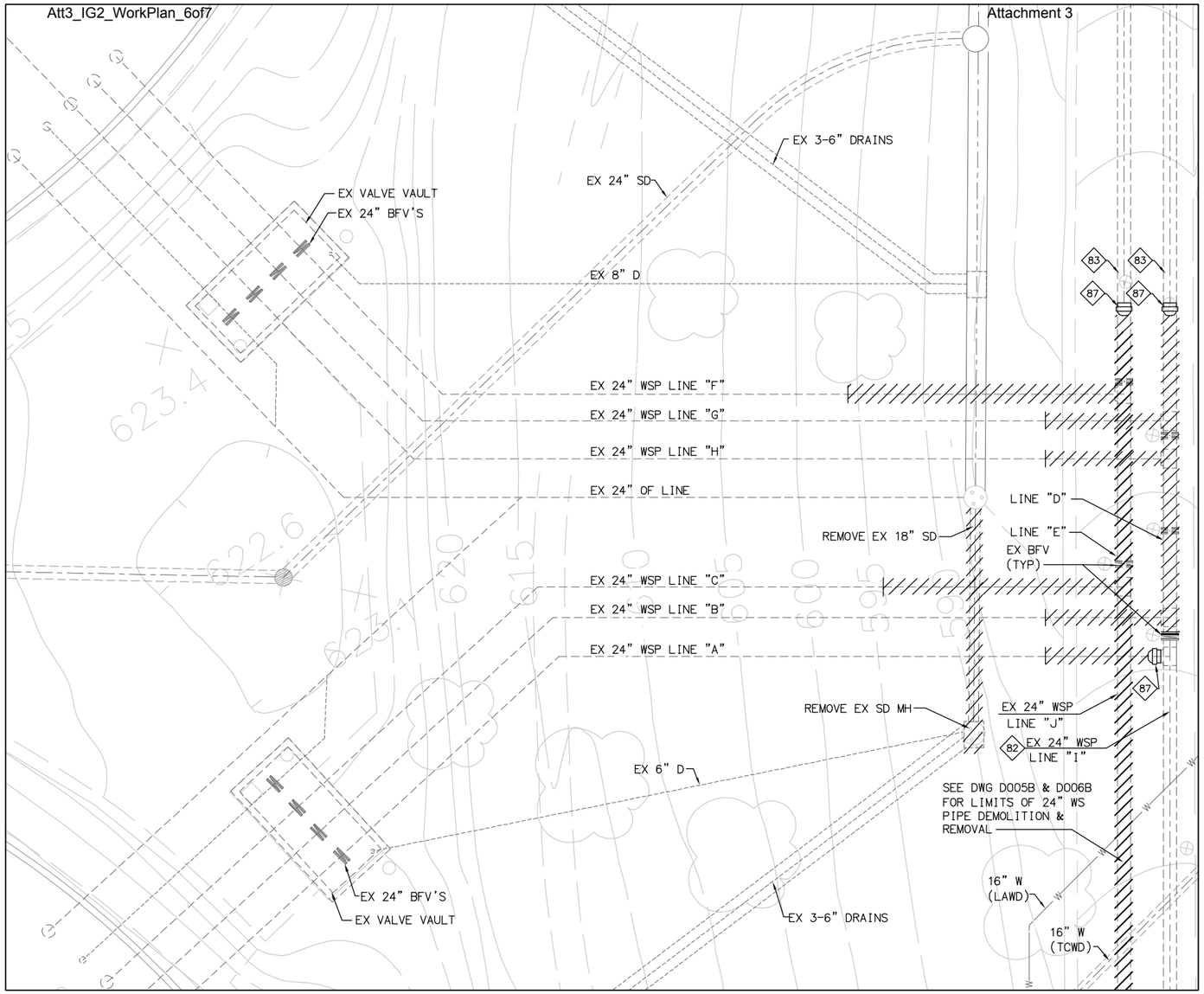

DEMOLITION PLAN

SCALE: 1"=10'

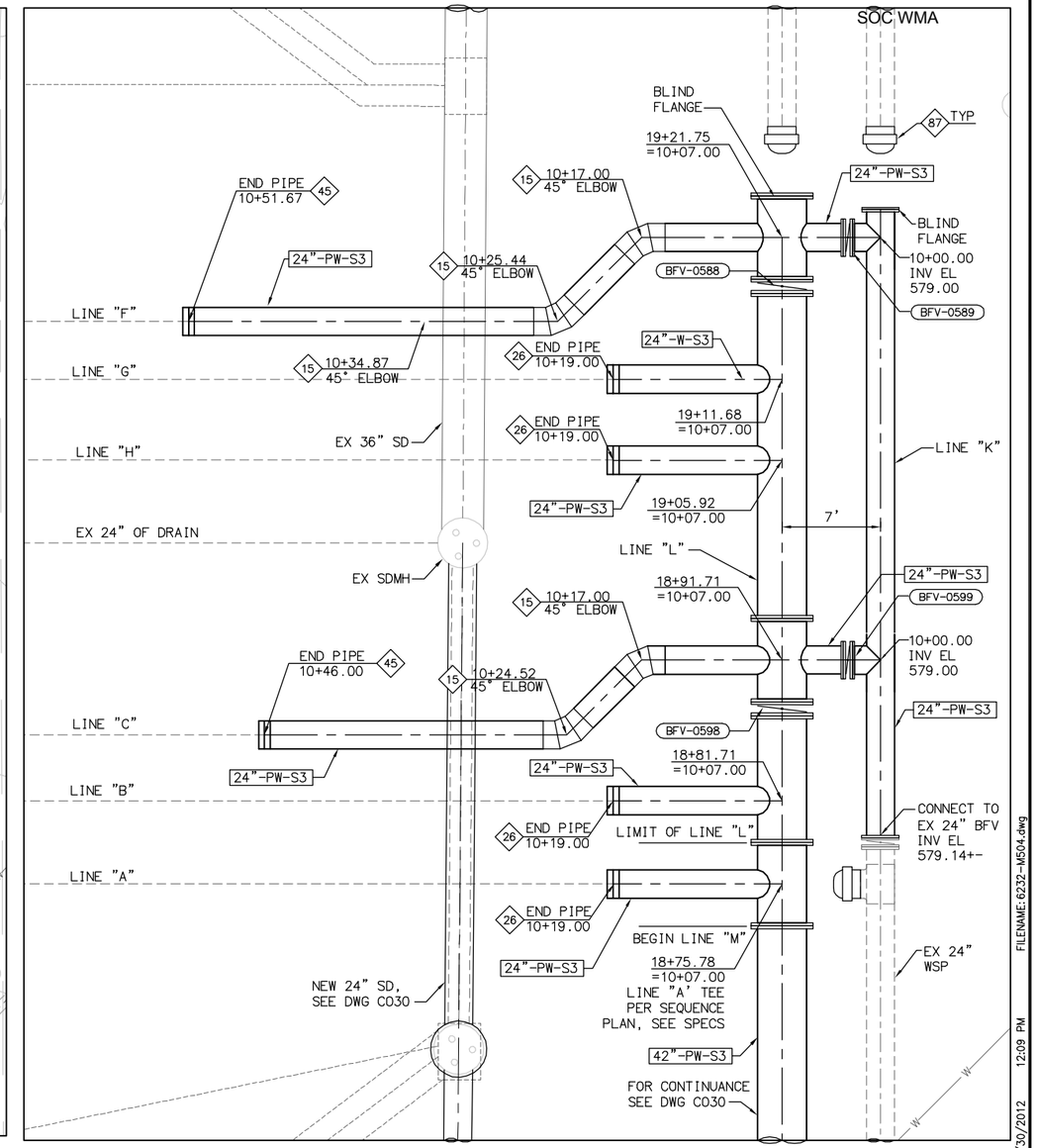

PIPING LAYOUT

SCALE: 3/16"=1'-0"

KEY NOTES

15 3 PIECE CML&C FABRICATED WELDED STEEL ELBOW PER AWWA C208. R=2.5D

26 BUTT STRAP CONNECTION PER IRWD STD. DWG. W-20

45 MAKE CONNECTION WITH FABRICATED MITERED CML&C WS BEND. CONTRACTOR TO POTHOLE AND VERIFY PLAN ELEVATIONS BEFORE PIPE FABRICATION.

82 PROTECT IN PLACE

83 ABANDON IN PLACE

87 CAP W/ WELDED STEEL BULKHEAD & CONNECT WITH BUTTSTRAP IRWD STD. DWG W-20

EQUIPMENT TAG NUMBERS ON THIS DRAWING ARE PRECEDED W/ **05-PW-** UNLESS OTHERWISE LABELED

No.	DATE	REVISIONS	APPROVED

DESIGNED: WFM
DRAWN: DDT
CHECKED: CLM

RBF CONSULTING
carollo
IRVINE RANCH WATER DISTRICT

WILLIAM F. McINERNEY	RCE NO. 16084	PROJECT ENGINEER	DATE
CINDY MILLER	RCE NO. 58116	PROJECT MANAGER	DATE
PATRICIA UEMATSU	RCE NO. 36762	PRINCIPAL ENGINEER	DATE

IRVINE RANCH WATER DISTRICT
BAKER WATER TREATMENT PLANT
PROJECT NO. 11218

PRODUCT WATER CLEARWELLS OUTLET PIPING MODIFICATIONS DEMOLITION AND LAYOUT

DRAWING **M504**
SHEET **355** OF **632**

FILENAME: 6232-M504.dwg
LAST UPDATED: 01/30/2012 12:09 PM
LAST SAVED BY: dtrujillo

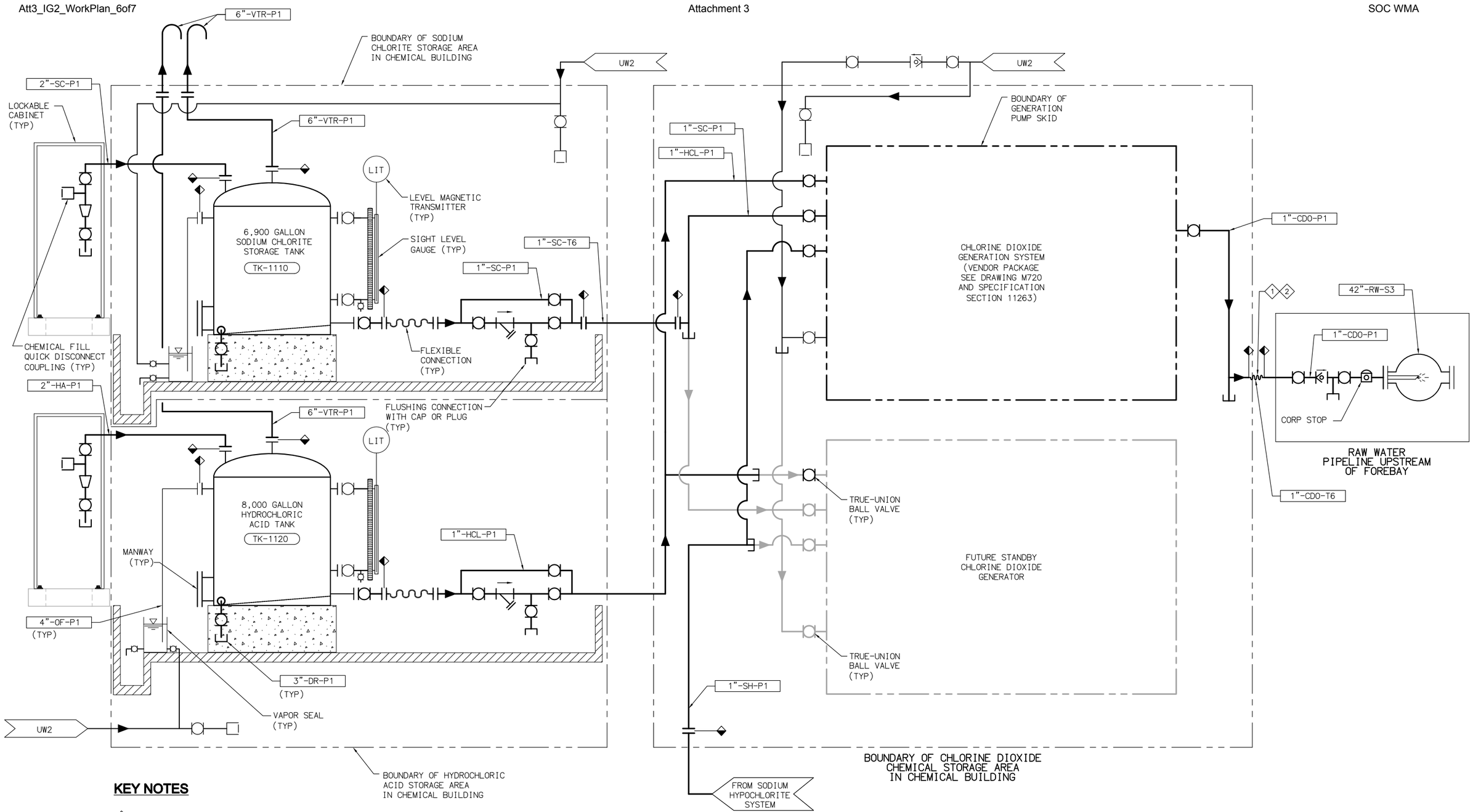

KEY NOTES

1. CHANGE OF MATERIAL SYMBOLS INDICATE TRANSITION WHERE HARD PIPE LEAVES OR ENTERS BUILDING AND TUBING IS REQUIRED BETWEEN.
2. PVC TUBING IN SECONDARY 4-INCH PVC CARRIER PIPE.

EQUIPMENT TAG NUMBERS ON THIS DRAWING ARE PRECEDED W/07-CDO- UNLESS OTHERWISE LABELED

No.	DATE	REVISIONS	APPROVED

DESIGNED: DAH
DRAWN: RCM
CHECKED: VJR

RBF CONSULTING

carollo

IRVINE RANCH WATER DISTRICT

JIM MEYERHOFER	RCE NO. 48451	PROJECT MANAGER	DATE
CINDY MILLER	RCE NO. 58116	PROJECT MANAGER	DATE
PATRICIA UEMATSU	RCE NO. 36762	PRINCIPAL ENGINEER	DATE

IRVINE RANCH WATER DISTRICT
BAKER WATER TREATMENT PLANT
PROJECT NO. 11218

CHEMICAL BUILDING CHLORINE DIOXIDE CHEMICAL SCHEMATIC

DRAWING M701
SHEET 360 OF 632

LAST SAVED BY: trea LAST UPDATED: 01/05/2012 10:30 AM FILENAME:8127A10-6232-M701.dwg

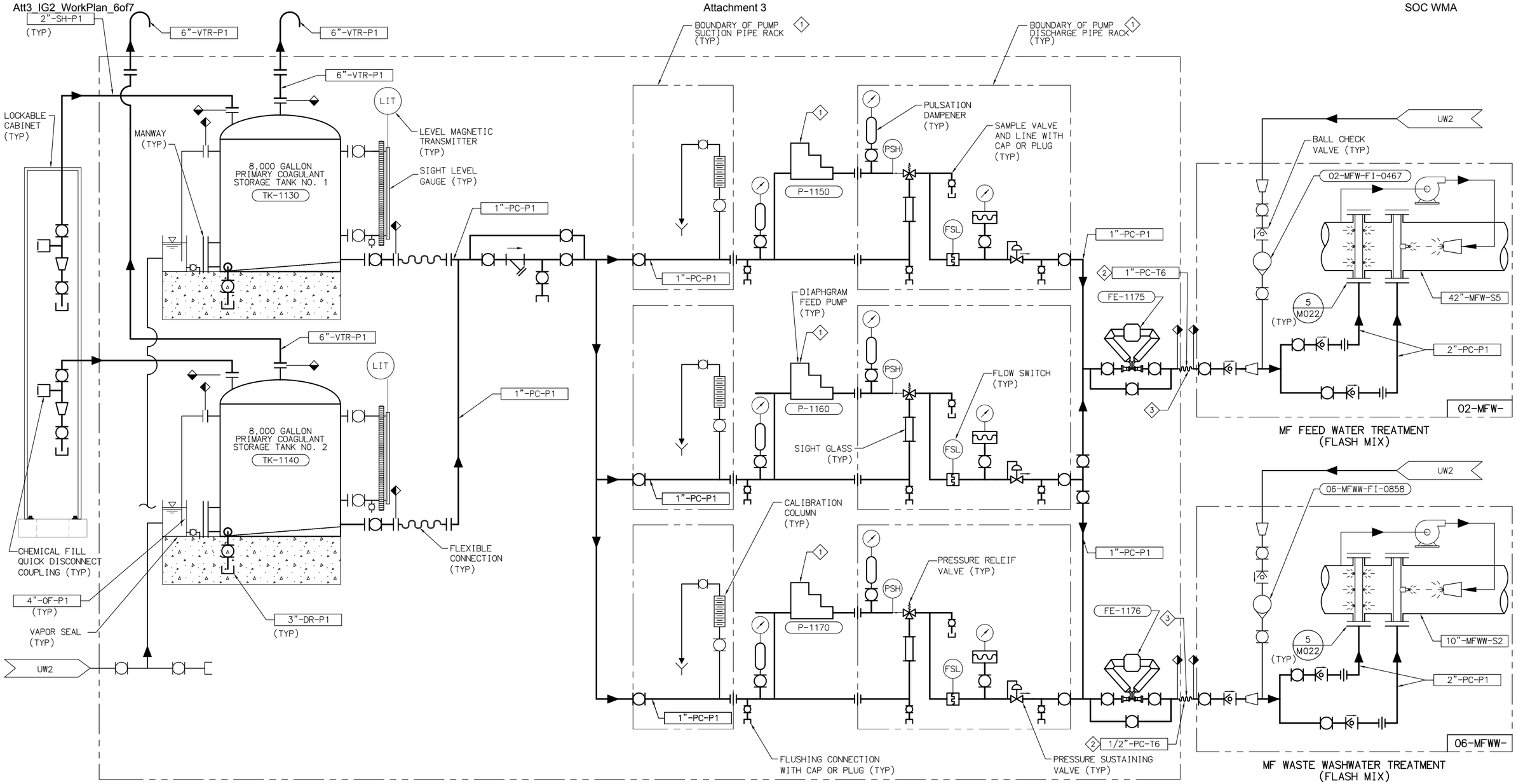

KEY NOTES

1. CHEMICAL METERING PUMPS WITH SUCTION ACCESSORIES AND DISCHARGE ACCESSORIES TO BE SUPPLIED AS COMPLETE PRE-ASSEMBLED PIPE SUPPORT RACK. SEE SECTION 11242.
2. PVC TUBING IN SECONDARY 4-INCH PVC CARRIER PIPE.
3. CHANGE OF MATERIAL SYMBOLS INDICATE TRANSITION WHERE HARD PIPE LEAVES OR ENTERS BUILDING AND TUBING IS REQUIRED BETWEEN.

EQUIPMENT TAG NUMBERS ON THIS DRAWING ARE PRECEDED W/ 07-PC- UNLESS OTHERWISE LABELED

No.	DATE	REVISIONS	APPROVED

DESIGNED: DAH
DRAWN: RCM
CHECKED: VJR

RBF CONSULTING

carollo

IRVINE RANCH WATER DISTRICT

JIM MEYERHOFER	RCE NO. 48451	PROJECT MANAGER	DATE
CINDY MILLER	RCE NO. 58116	PROJECT MANAGER	DATE
PATRICIA UEMATSU	RCE NO. 36762	PRINCIPAL ENGINEER	DATE

IRVINE RANCH WATER DISTRICT
BAKER WATER TREATMENT PLANT
PROJECT NO. 11218

CHEMICAL BUILDING PRIMARY COAGULANT CHEMICAL SCHEMATIC

DRAWING M703

SHEET 361 OF 632

FILENAME: 8127A10-6232-M703.dwg
LAST UPDATED: 01/05/2012 10:30 AM
LAST SAVED BY: trea

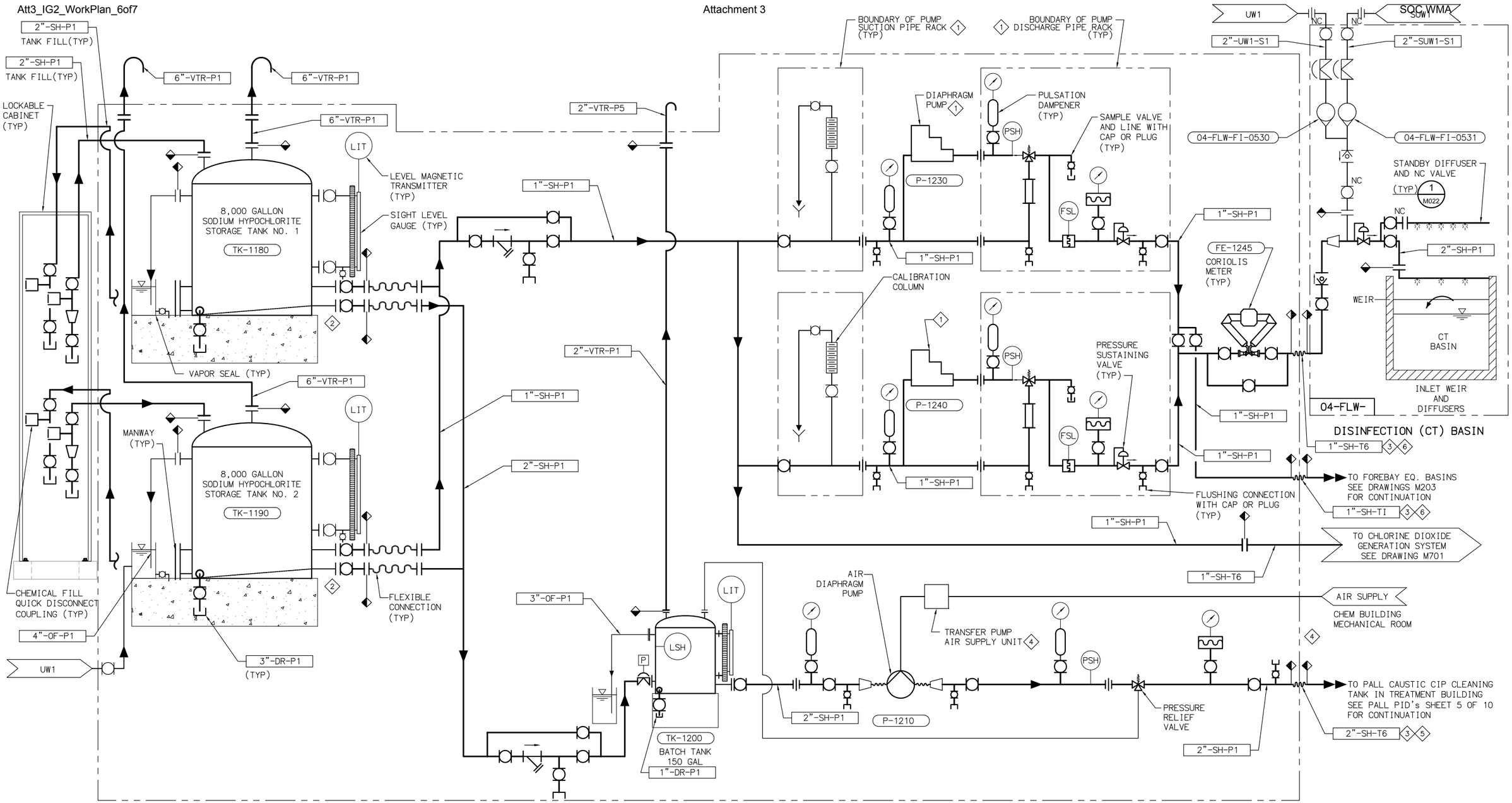

NOTES

1. ALL BALL VALVES FOR HYPOCHLORITE SERVICE SHALL HAVE VENTED BALLS.

KEY NOTES

1. CHEMICAL METERING PUMPS WITH SUCTION AND DISCHARGE ACCESSORIES TO BE SUPPLIES AS COMPLETE PRE-ASSEMBLED PIPE SUPPORT RACKS. SEE SECTION 11242.
2. LOW-POINT OF SH PUMP SUCTION PIPING. INSTALL AT ±1% UNIFORM SLOPE. SLOPE BACK TO STORAGE TANK AND UP TO PUMP INLET.
3. CHANGE OF MATERIAL SYMBOLS INDICATE TRANSITION WHERE HARD PIPE LEAVES OR ENTERS BUILDING AND TUBING IS REQUIRED BETWEEN.
4. AIR SUPPLY PRE-ASSEMBLED SKID, SEE M781.
5. PVC TUBING IN 6-INCH PVC CARRIER PIPE.
6. PVC TUBING IN 4-INCH PVC CARRIER PIPE.

EQUIPMENT TAG NUMBERS ON THIS DRAWING ARE PRECEDED W/ 07-SH- UNLESS OTHERWISE LABELED

No.	DATE	REVISIONS	APPROVED

DESIGNED: DAH
DRAWN: RCM
CHECKED: VJR

RBF CONSULTING

carollo

IRVINE RANCH WATER DISTRICT

JIM MEYERHOFER	RCE NO. 48451	PROJECT MANAGER	DATE
CINDY MILLER	RCE NO. 58116	PROJECT MANAGER	DATE
PATRICIA UEMATSU	RCE NO. 36762	PRINCIPAL ENGINEER	DATE

IRVINE RANCH WATER DISTRICT
BAKER WATER TREATMENT PLANT
PROJECT NO. 11218

CHEMICAL BUILDING
SODIUM HYPOCHLORITE
CHEMICAL SCHEMATIC

DRAWING M704

SHEET 362 OF 632

FILENAME:8127A10-6232-M704.dwg
LAST UPDATED: 01/05/2012 10:42 AM
LAST SAVED BY: trea

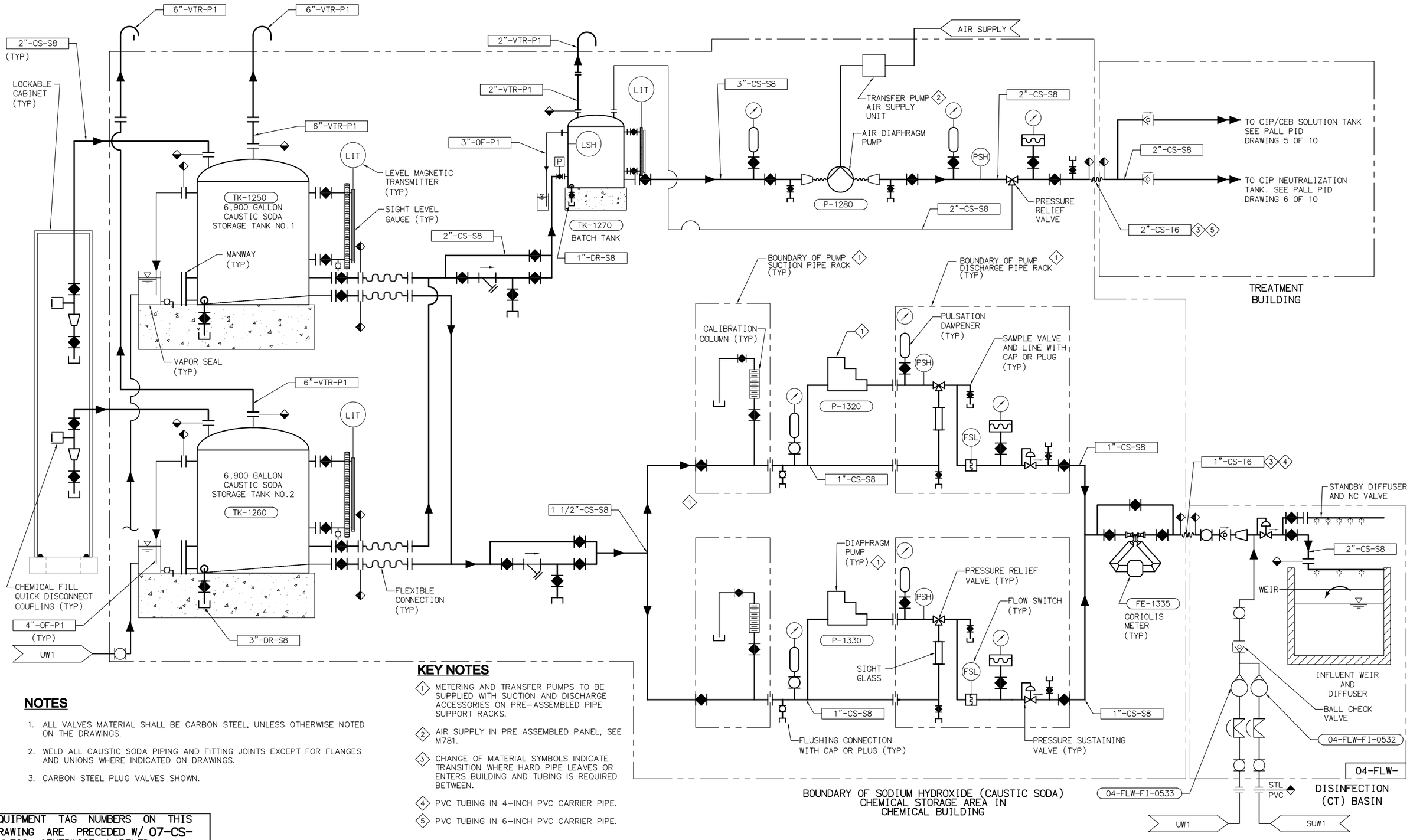

NOTES

1. ALL VALVES MATERIAL SHALL BE CARBON STEEL, UNLESS OTHERWISE NOTED ON THE DRAWINGS.
2. WELD ALL CAUSTIC SODA PIPING AND FITTING JOINTS EXCEPT FOR FLANGES AND UNIONS WHERE INDICATED ON DRAWINGS.
3. CARBON STEEL PLUG VALVES SHOWN.

KEY NOTES

1. METERING AND TRANSFER PUMPS TO BE SUPPLIED WITH SUCTION AND DISCHARGE ACCESSORIES ON PRE-ASSEMBLED PIPE SUPPORT RACKS.
2. AIR SUPPLY IN PRE ASSEMBLED PANEL, SEE M781.
3. CHANGE OF MATERIAL SYMBOLS INDICATE TRANSITION WHERE HARD PIPE LEAVES OR ENTERS BUILDING AND TUBING IS REQUIRED BETWEEN.
4. PVC TUBING IN 4-INCH PVC CARRIER PIPE.
5. PVC TUBING IN 6-INCH PVC CARRIER PIPE.

EQUIPMENT TAG NUMBERS ON THIS DRAWING ARE PRECEDED W/ 07-CS- UNLESS OTHERWISE LABELED

No.	DATE	REVISIONS	APPROVED

DESIGNED: DAH
DRAWN: RCM
CHECKED: VJR

RBF CONSULTING
carollo
IRVINE RANCH WATER DISTRICT

JIM MEYERHOFER	RCE NO. 48451	PROJECT MANAGER	DATE
CINDY MILLER	RCE NO. 58116	PROJECT MANAGER	DATE
PATRICIA UEMATSU	RCE NO. 36762	PRINCIPAL ENGINEER	DATE

IRVINE RANCH WATER DISTRICT
BAKER WATER TREATMENT PLANT
PROJECT NO. 11218

CHEMICAL BUILDING
CAUSTIC SODA
CHEMICAL SCHEMATIC

DRAWING M705
SHEET 363 OF 632

FILENAME: 8127A10-6232-M705.dwg
LAST UPDATED: 01/05/2012 10:43 AM
LAST SAVED BY: trea

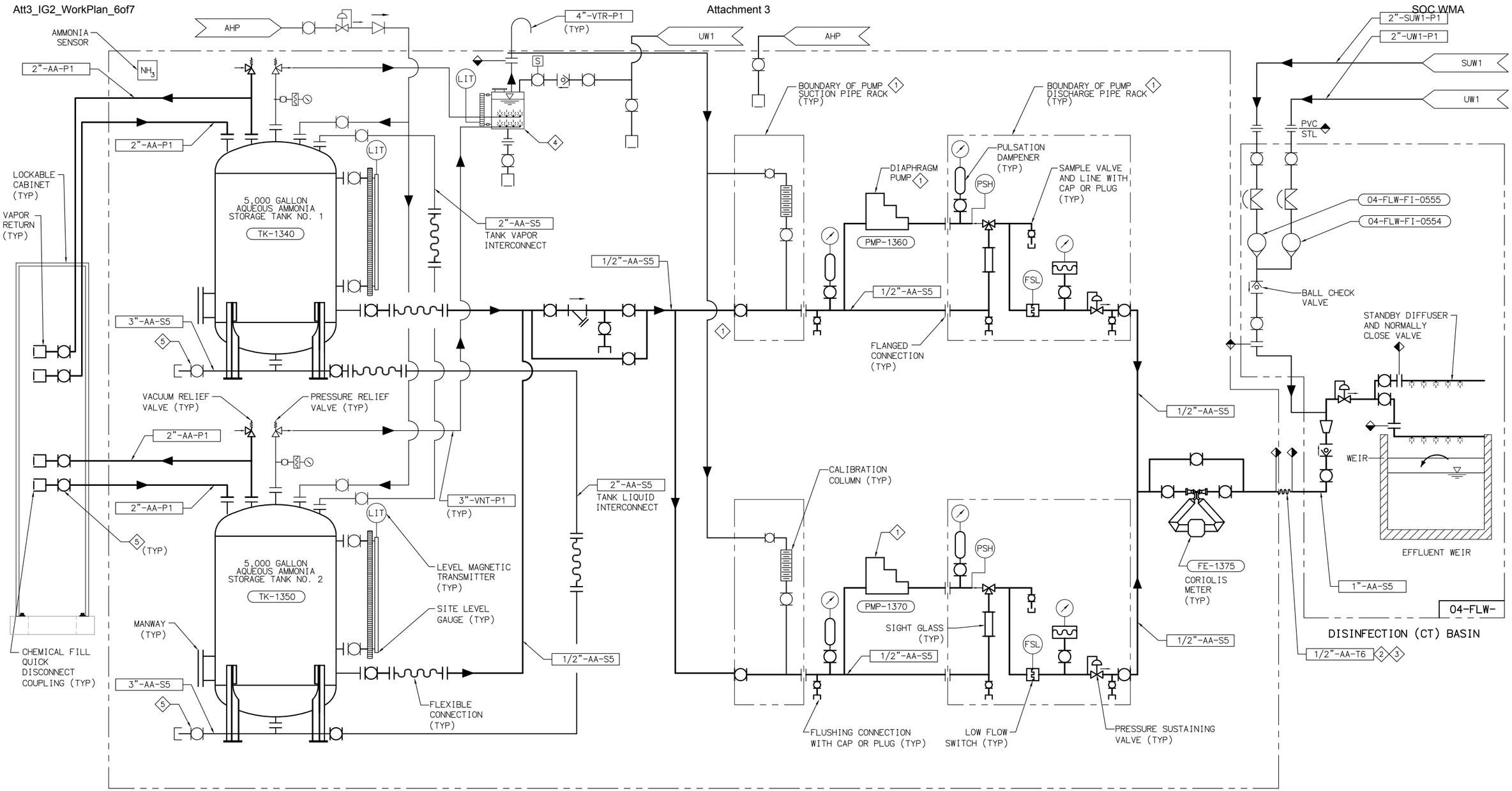

NOTES

1. ALL BALL VALVES FOR AQUEOUS AMMONIA SERVICE SHALL HAVE VENTED BALLS.

KEY NOTES

1. METERING PUMPS WITH SUCTION AND DISCHARGE ACCESSORIES TO BE SUPPLIED ON PRE-ASSEMBLED PIPE SUPPORT RACKS.
2. CHANGE OF MATERIAL SYMBOLS INDICATE TRANSITION WHERE HARD PIPE LEAVES OR ENTERS BUILDING AND TUBING IS REQUIRED BETWEEN.
3. PVC TUBING IN 4-INCH PVC CARRIER PIPE.
4. SEE SHEET M752 FOR AMMONIA SCRUBBER DETAILS.
5. PROVIDE STAINLESS STEEL BALL VALVE WITH LATCH-LOCK HANDLE. LOCKABLE IN BOTH CLOSED AND OPEN POSITIONS.

BOUNDARY OF AQUEOUS AMMONIA CHEMICAL STORAGE AREA IN CHEMICAL BUILDING

EQUIPMENT TAG NUMBERS ON THIS DRAWING ARE PRECEDED W/ 07-AA- UNLESS OTHERWISE LABELED

No.	DATE	REVISIONS	APPROVED

DESIGNED: DAH
DRAWN: RCM
CHECKED: VJR

RBF CONSULTING
carollo
IRVINE RANCH WATER DISTRICT

JIM MEYERHOFER	RCE NO. 48451	PROJECT MANAGER	DATE
CINDY MILLER	RCE NO. 58116	PROJECT MANAGER	DATE
PATRICIA UEMATSU	RCE NO. 36762	PRINCIPAL ENGINEER	DATE

IRVINE RANCH WATER DISTRICT
BAKER WATER TREATMENT PLANT
PROJECT NO. 11218

CHEMICAL BUILDING
AQUEOUS AMMONIA (AA)
CHEMICAL SCHEMATIC

DRAWING M706
SHEET 364 OF 632

FILENAME: 8127A10-6232-M706.dwg
LAST UPDATED: 01/05/2012 10:44 AM
LAST SAVED BY: trea

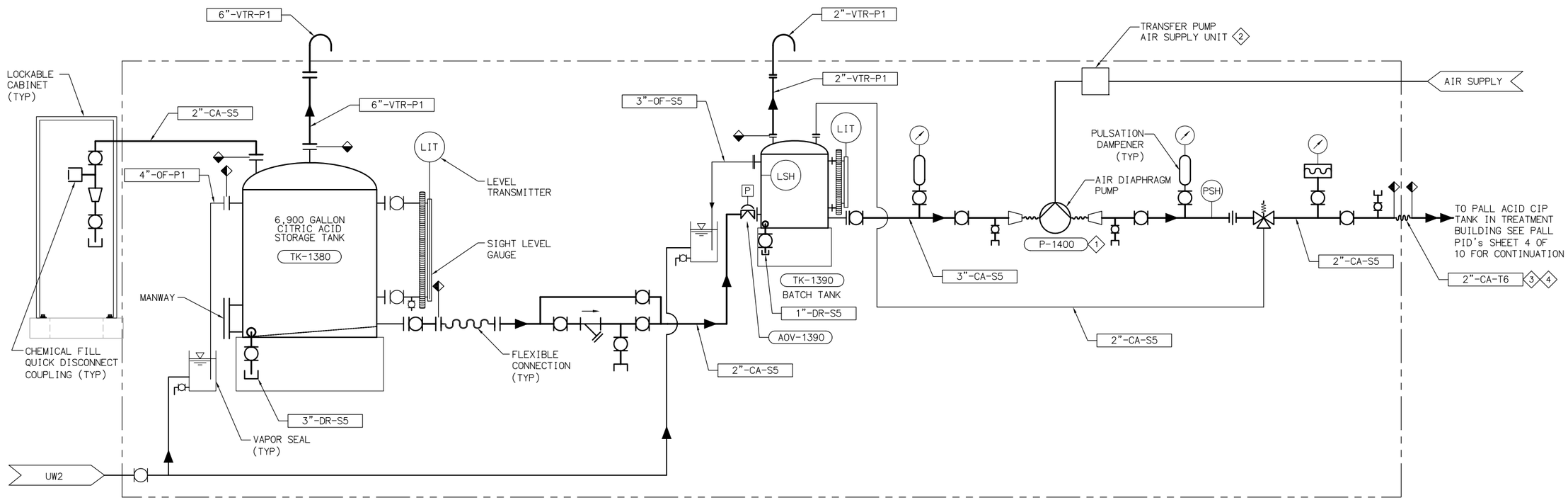

KEY NOTES

1. TRANSFER PUMPS TO BE SUPPLIED WITH DISCHARGE ACCESSORIES ON PRE-ASSEMBLED PIPE SUPPORT RACKS.
2. AIR SUPPLY IN PRE ASSEMBLED PANEL, SEE M781.
3. 2-INCH PVC TUBING IN 6-INCH PVC CARRIER PIPE.
4. CHANGE OF MATERIAL SYMBOLS INDICATE TRANSITION WHERE HARD PIPE LEAVES OR ENTERS BUILDING AND TUBING IS REQUIRED BETWEEN.

EQUIPMENT TAG NUMBERS ON THIS DRAWING ARE PRECEDED W/ 07-CA- UNLESS OTHERWISE LABELED

No.	DATE	REVISIONS	APPROVED

DESIGNED: DAH
DRAWN: RCM
CHECKED: VJR

RBF CONSULTING

carollo

IRVINE RANCH WATER DISTRICT

JIM MEYERHOFER	RCE NO. 48451	PROJECT MANAGER	DATE
CINDY MILLER	RCE NO. 58116	PROJECT MANAGER	DATE
PATRICIA UEMATSU	RCE NO. 36762	PRINCIPAL ENGINEER	DATE

IRVINE RANCH WATER DISTRICT
BAKER WATER TREATMENT PLANT
PROJECT NO. 11218

CHEMICAL BUILDING CITRIC ACID CHEMICAL SCHEMATIC

DRAWING M707
SHEET 365 OF 632

FILENAME:8127A10-6232-M707.dwg
LAST UPDATED: 01/05/2012 10:45 AM
LAST SAVED BY: trea

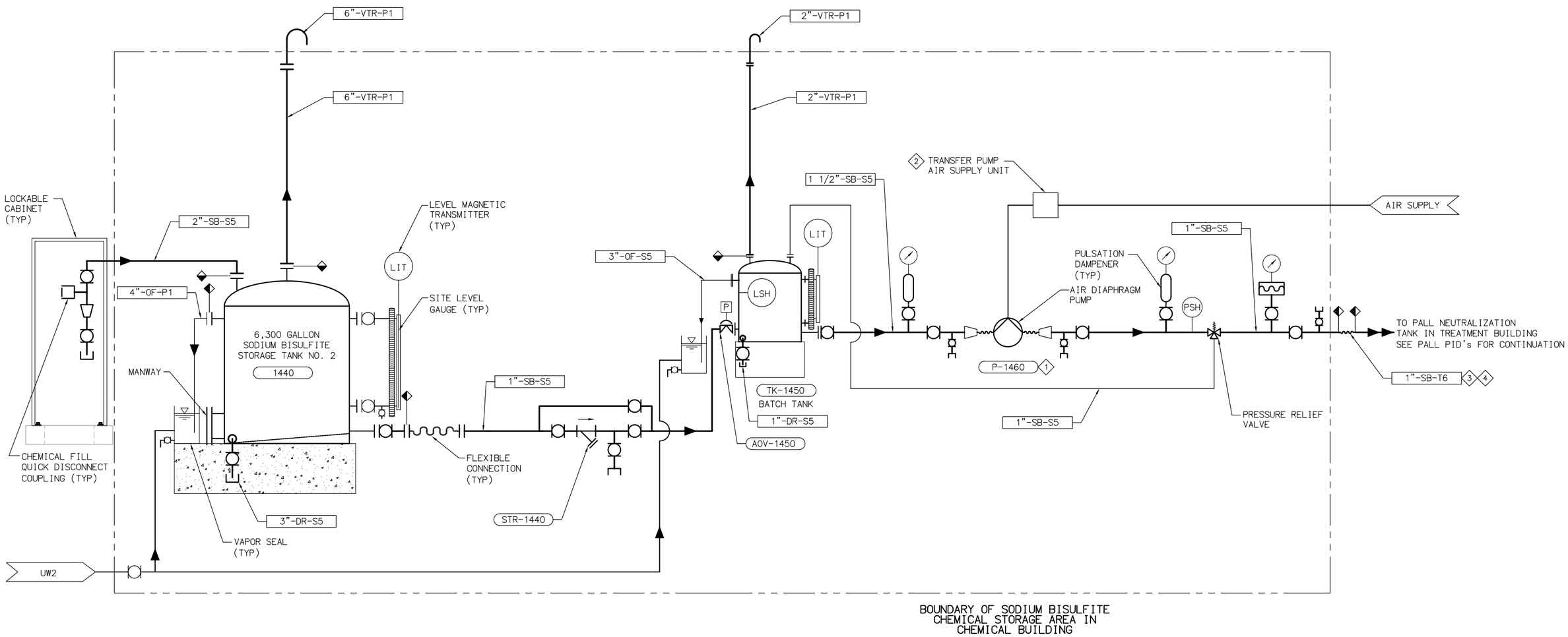

KEY NOTES

1. TRANSFER PUMPS TO BE SUPPLIED WITH DISCHARGE ACCESSORIES ON PRE-ASSEMBLED PIPE SUPPORT RACKS.
2. AIR SUPPLY IN PRE ASSEMBLED PANEL, SEE M781.
3. 1-INCH PVC TUBING IN 4-INCH PVC CARRIER PIPE.
4. CHANGE OF MATERIAL SYMBOLS INDICATE TRANSITION WHERE HARD PIPE LEAVES OR ENTERS BUILDING AND TUBING IS REQUIRED BETWEEN.

EQUIPMENT TAG NUMBERS ON THIS DRAWING ARE PRECEDED W/ 07-SB- UNLESS OTHERWISE LABELED

No.	DATE	REVISIONS	APPROVED

DESIGNED: DAH
DRAWN: RCM
CHECKED: VJR

RBF CONSULTING
carollo
IRVINE RANCH WATER DISTRICT

JIM MEYERHOFER	RCE NO. 48451	PROJECT MANAGER	DATE
CINDY MILLER	RCE NO. 58116	PROJECT MANAGER	DATE
PATRICIA UEMATSU	RCE NO. 36762	PRINCIPAL ENGINEER	DATE

IRVINE RANCH WATER DISTRICT
BAKER WATER TREATMENT PLANT
PROJECT NO. 11218

CHEMICAL BUILDING
SODIUM BISULFITE
CHEMICAL SCHEMATIC

DRAWING M708
SHEET 366 OF 632

FILENAME: 8127A10-6232-M708.dwg
LAST UPDATED: 01/05/2012 10:45 AM
LAST SAVED BY: trea

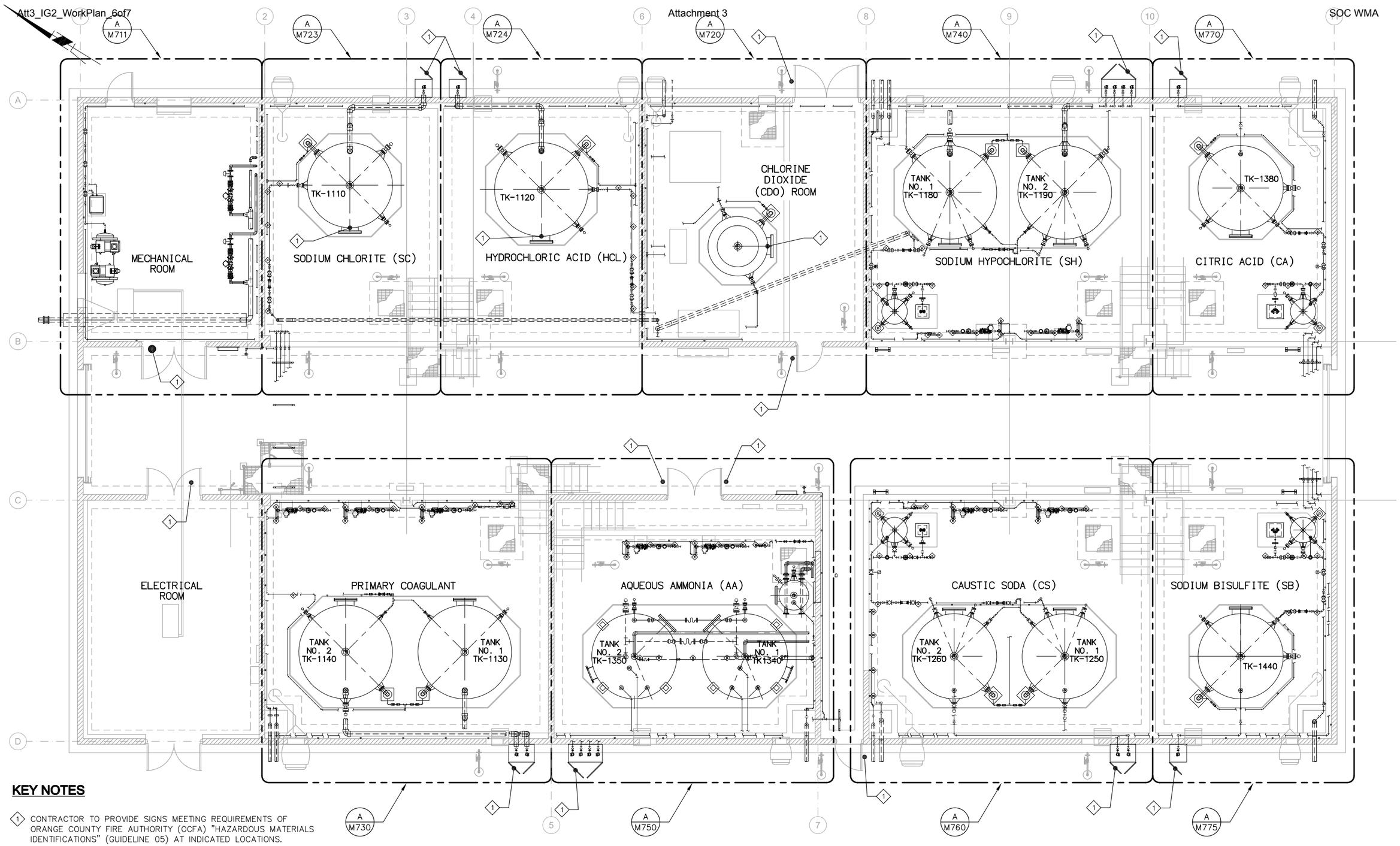

KEY NOTES

1. CONTRACTOR TO PROVIDE SIGNS MEETING REQUIREMENTS OF ORANGE COUNTY FIRE AUTHORITY (OCFA) "HAZARDOUS MATERIALS IDENTIFICATIONS" (GUIDELINE 05) AT INDICATED LOCATIONS.

KEY PLAN

SCALE: 3/16" = 1'-0"

FILENAME:8127A10-6232-M710.dwg
LAST UPDATED: 01/05/2012 01:33 PM
LAST SAVED BY: trea

No.	DATE	REVISIONS	APPROVED

DESIGNED: DAH
DRAWN: RCM
CHECKED: VJR

RBF CONSULTING
carollo
IRVINE RANCH WATER DISTRICT

JIM MEYERHOFER	RCE NO. 48451	PROJECT MANAGER	DATE
CINDY MILLER	RCE NO. 58116	PROJECT MANAGER	DATE
PATRICIA UEMATSU	RCE NO. 36762	PRINCIPAL ENGINEER	DATE

IRVINE RANCH WATER DISTRICT
BAKER WATER TREATMENT PLANT
PROJECT NO. 11218

CHEMICAL BUILDING KEY PLAN

DRAWING
M710
SHEET
367 OF 632

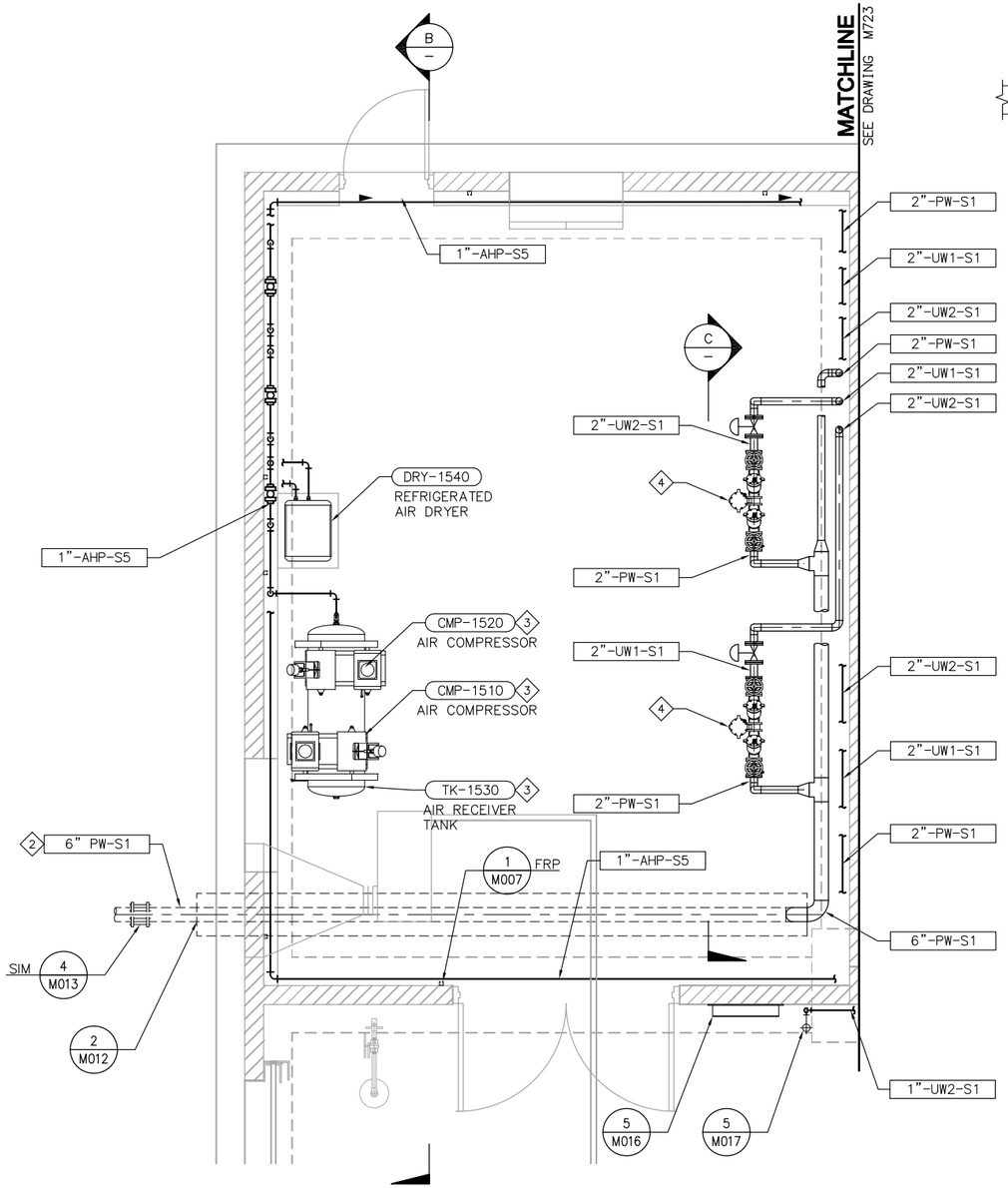

PLAN - MECHANICAL ROOM

SCALE: 3/8" = 1'-0" (A / M710)

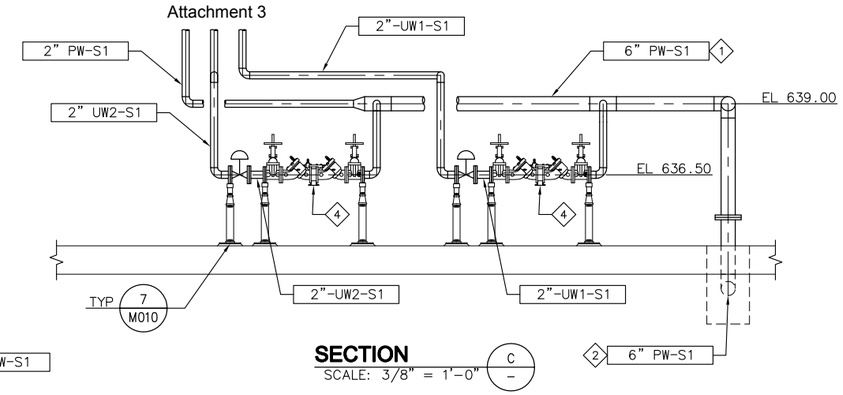

SECTION

SCALE: 3/8" = 1'-0" (C / –)

NOTES

1. REFER TO M001–MECHANICAL NOTES FOR ADDITIONAL INFORMATION AND REQUIREMENTS.
2. FOR CONTINUATION OF PIPING OUTSIDE OF STRUCTURES, SEE CIVIL DRAWINGS.
3. WHERE NO CONSTRUCTION DETAILS ARE SHOWN OR NOTED FOR ANY PART OF THE WORK, DETAILS SHALL BE THE SAME AS FOR OTHER SIMILAR WORK.

KEY NOTES

1. SEE PLUMBING DRAWINGS FOR FLOOR DRAIN, SAFETY SHOWER, AND POTABLE WATER LOCATIONS AND PIPING.
2. CONCRETE ENCASE ALL PIPES UNDER STRUCTURES PER TYPICAL DETAIL 2/M012.
3. REFER TO SECTION 11372A FOR REQUIREMENTS RELATED TO AIR COMPRESSOR AND ACCESSORIES.
4. REDUCED PRESSURE ZONE BACKFLOW PREVENTER, SEE SECTION 15117 FOR REQUIREMENTS.
5. PARTICULATE FILTER, SEE SECTION 15117.
6. COALESCING FILTER, SEE SECTION 15117.

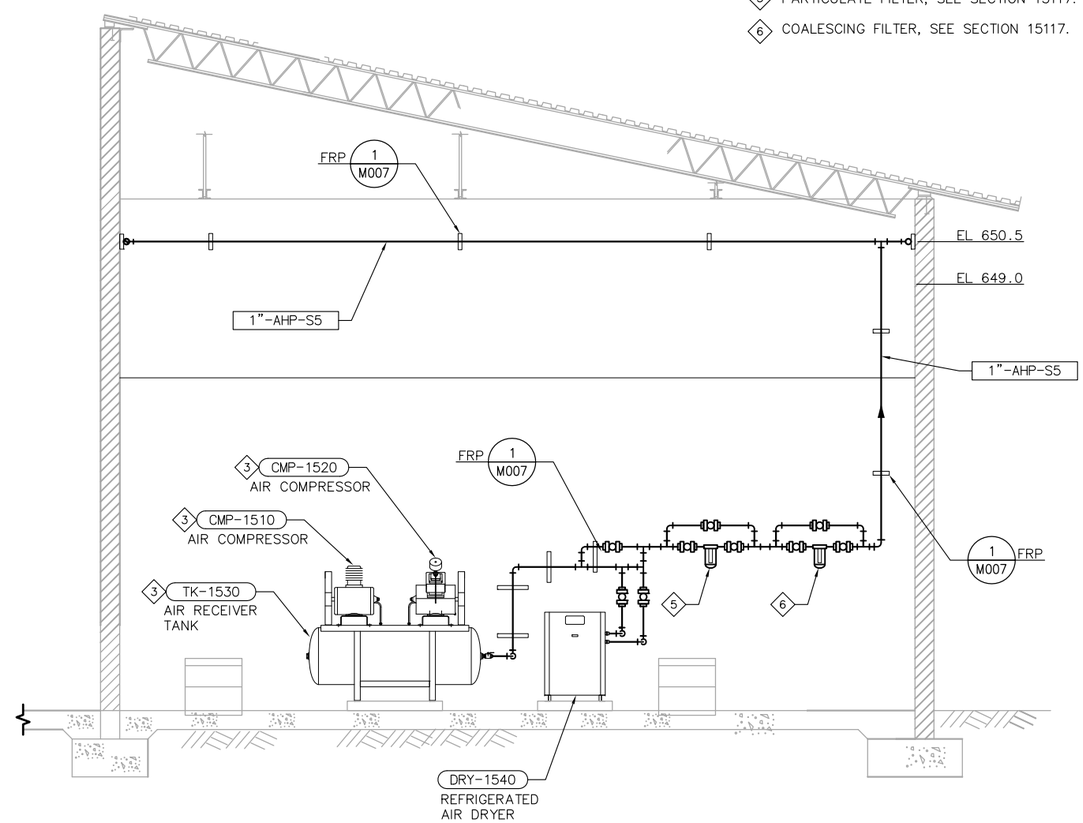

SECTION

SCALE: 3/8" = 1'-0" (B / –)

EQUIPMENT TAG NUMBERS ON THIS DRAWING ARE PRECEDED W/ 07-PA- UNLESS OTHERWISE LABELED

No.	DATE	REVISIONS	APPROVED

DESIGNED: DAH
DRAWN: RCM
CHECKED: VJR

RBF CONSULTING

carollo

IRVINE RANCH WATER DISTRICT

JIM MEYERHOFER	RCE NO. 48451	PROJECT MANAGER	DATE
CINDY MILLER	RCE NO. 58116	PROJECT MANAGER	DATE
PATRICIA UEMATSU	RCE NO. 36762	PRINCIPAL ENGINEER	DATE

IRVINE RANCH WATER DISTRICT
BAKER WATER TREATMENT PLANT
PROJECT NO. 11218

CHEMICAL BUILDING MECHANICAL ROOM ENLARGED PLAN AND SECTION

DRAWING M711

SHEET 368 OF 632

FILENAME: 8127A10-6232-M711.dwg
LAST UPDATED: 01/05/2012 10:47 AM
LAST SAVED BY: trea

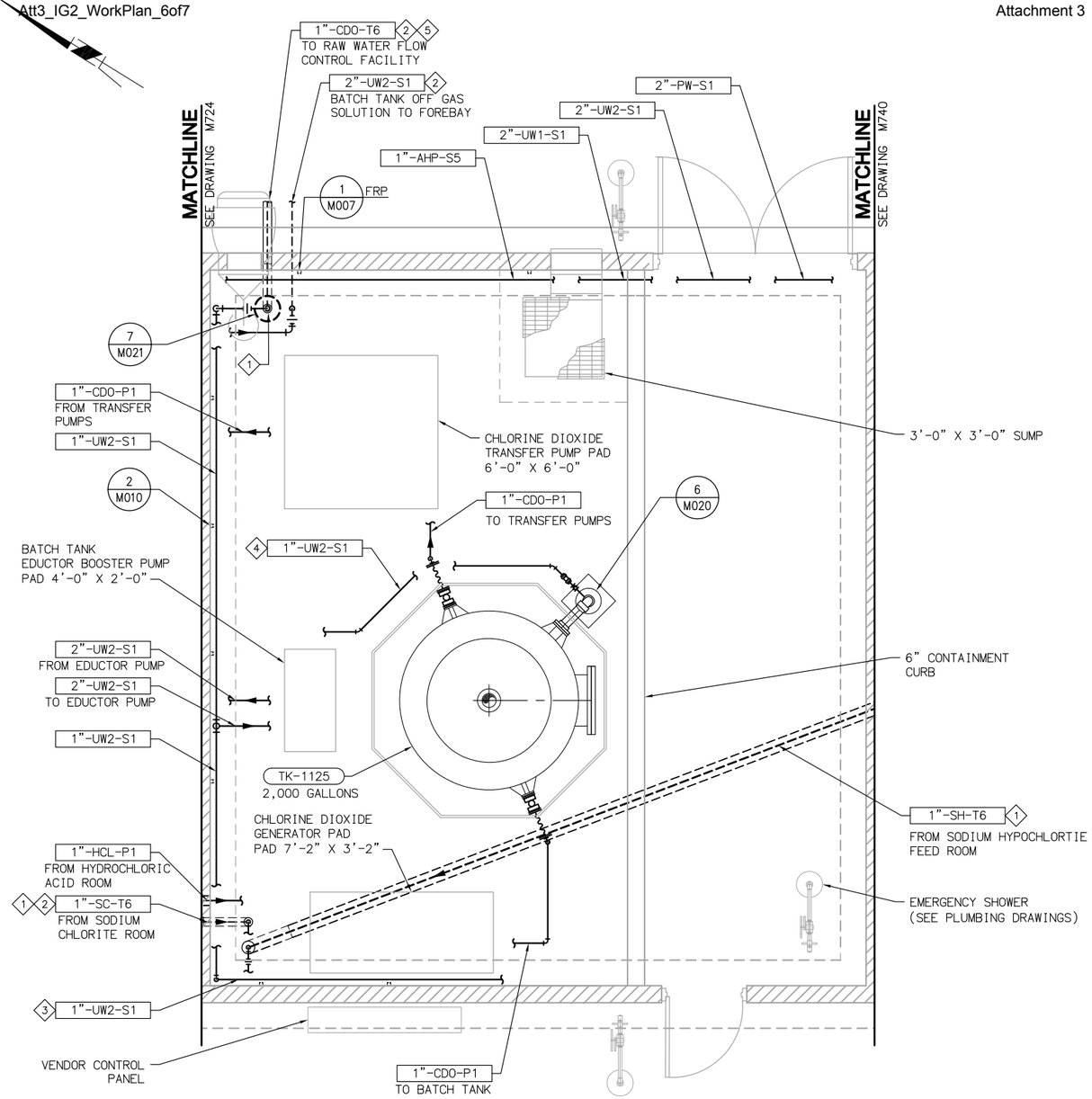

PLAN - CHLORINE DIOXIDE ROOM

SCALE: 3/8" = 1'-0"

A M710

NOTES

1. REFER TO M001-MECHANICAL NOTES FOR ADDITIONAL INFORMATION AND REQUIREMENTS.
2. FOR CONTINUATION OF PIPING OUTSIDE OF STRUCTURES, SEE CIVIL DRAWINGS.
3. WHERE NO CONSTRUCTION DETAILS ARE SHOWN OR NOTED FOR ANY PART OF THE WORK, DETAILS SHALL BE THE SAME AS FOR OTHER SIMILAR WORK.

KEY NOTES

1. PVC TUBING IN 4-INCH CARRIER PIPE.
2. CONCRETE ENCASE ALL PIPES UNDER STRUCTURES PER TYPICAL DETAIL 2/M012.
3. FIELD ROUTE AND TERMINATE 1"-UW2-S1 LINE INSIDE CONTAINMENT AREA WITH ISOLATION BALL VALVE, ANTI-SIPHON VALVE, AND 1" QUICK-DISCONNECT THAT IS ACCESSIBLE TO FLUSHING CONNECTIONS IN PIPING.
4. FIELD ROUTE 1"-UW2-S1 LINE TO TANK OVERFLOW VAPOR SEAL CONNECTION PER DETAIL 6/M020.
5. PVC TUBING IN 6-INCH CARRIER PIPE.

EQUIPMENT TAG NUMBERS ON THIS DRAWING ARE PRECEDED W/ 07-CDO- UNLESS OTHERWISE LABELED

No.	DATE	REVISIONS	APPROVED

DESIGNED: DAH
DRAWN: RCM
CHECKED: VJR

RBF CONSULTING

carollo

IRVINE RANCH WATER DISTRICT

JIM MEYERHOFER	RCE NO. 48451	PROJECT MANAGER	DATE
CINDY MILLER	RCE NO. 58116	PROJECT MANAGER	DATE
PATRICIA UEMATSU	RCE NO. 36762	PRINCIPAL ENGINEER	DATE

IRVINE RANCH WATER DISTRICT
BAKER WATER TREATMENT PLANT
PROJECT NO. 11218

CHEMICAL BUILDING
CHLORINE DIOXIDE
ENLARGED PLAN AND SECTION

DRAWING M720

SHEET 369 OF 632

FILENAME:8127A10-6232-M720.dwg
LAST UPDATED: 01/26/2012 05:35 AM
LAST SAVED BY: trea

NOTES

1. REFER TO M001–MECHANICAL NOTES FOR ADDITIONAL INFORMATION AND REQUIREMENTS.
2. FOR CONTINUATION OF PIPING OUTSIDE OF STRUCTURES, SEE CIVIL DRAWINGS.
3. WHERE NO CONSTRUCTION DETAILS ARE SHOWN OR NOTED FOR ANY PART OF THE WORK, DETAILS SHALL BE THE SAME AS FOR OTHER SIMILAR WORK.

KEY NOTES

1. PVC TUBING IN 4–INCH PVC CARRIER PIPE.
2. INSTALL QUICK DISCONNECT ON ENDS OF PIPE FOR 3" HOSE CONNECTION.
3. SEE PLUMBING DRAWINGS FOR FLOOR DRAIN, SAFETY SHOWER, AND POTABLE WATER LOCATIONS AND PIPING.
4. COVER VENT PIPE ENDS W/NO. 24 MESH, 316 SST SCREEN SECURED IN PLACE WITH BOLTED RETAINER RING.
5. INSTALL ROOF PENETRATIONS PER ARCHITECTURAL DRAWINGS.
6. ROUTE OVERHEAD PIPING TO AVOID CONFLICTS WITH ROOF TRUSSES.
7. CONCRETE ENCASE ALL PIPES UNDER STRUCTURES PER TYPICAL DETAIL 2/M012.
8. FIELD ROUTE AND TERMINATE 1"–UW2–S1 LINE INSIDE CONTAINMENT AREA WITH ISOLATION BALL VALVE, ANTI–SIPHON VALVE, AND 1" QUICK DISCONNECT THAT IS ACCESSIBLE TO FLUSHING CONNECTIONS IN PIPING.
9. FIELD ROUTE 1"–UW2–S1 LINE TO TANK OVERFLOW VAPOR SEAL CONNECTION PER DETAIL 6/M020.
10. DOUBLE CONTAIN CHEMICAL TANK FILL PIPING. REFER TO SPECIFICATION 15293. PROVIDE 1–INCH VALVED DRAIN W/CLEAR SIGHT GLASS AT LOW POINT OF CONTAINMENT WITHIN BUILDING.
11. PAINT VENT PIPING EXPOSED TO SUNLIGHT PER SPECIFICATION 09900.

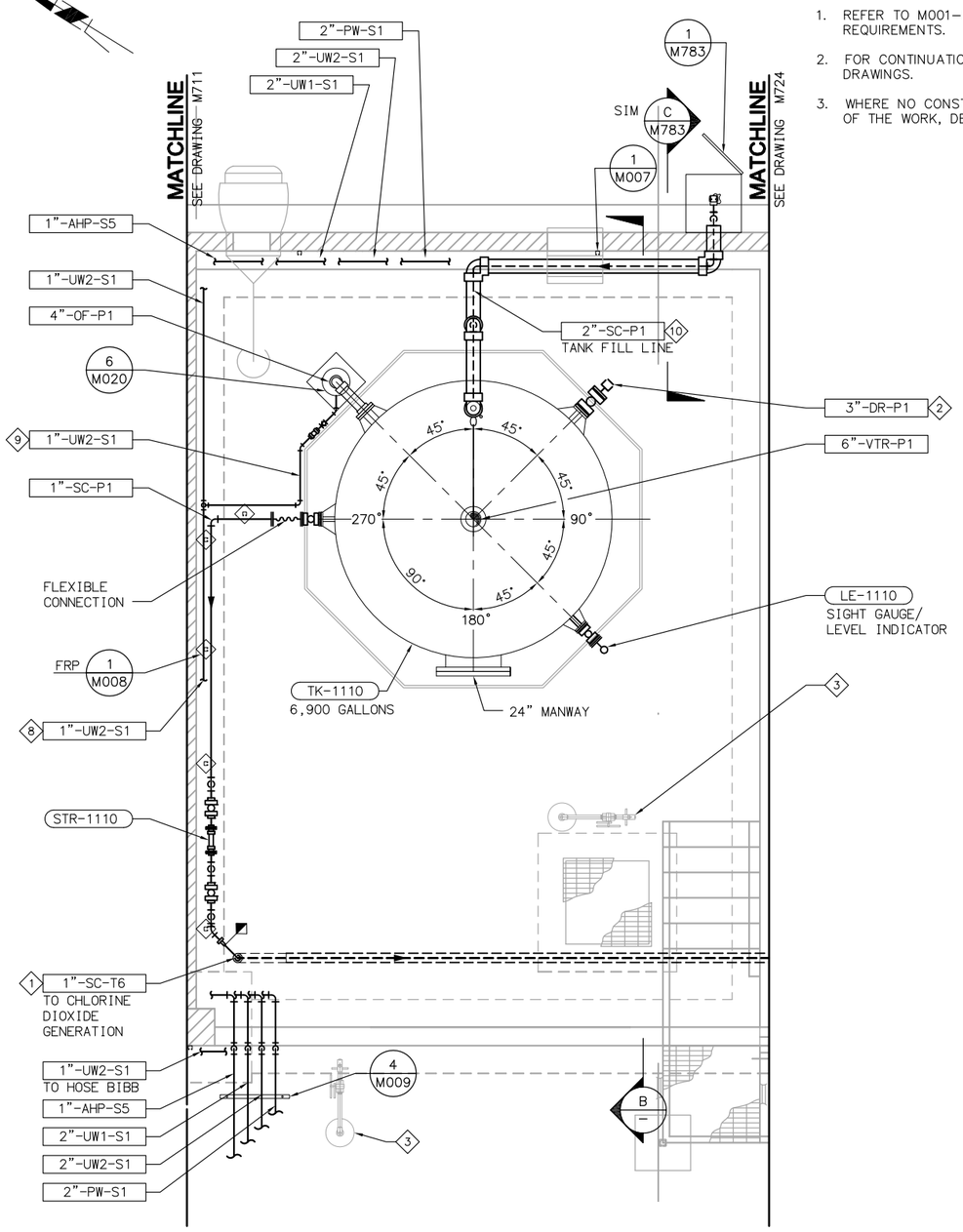

PLAN - SODIUM CHLORITE (A M710)
SCALE: 3/8" = 1'-0"

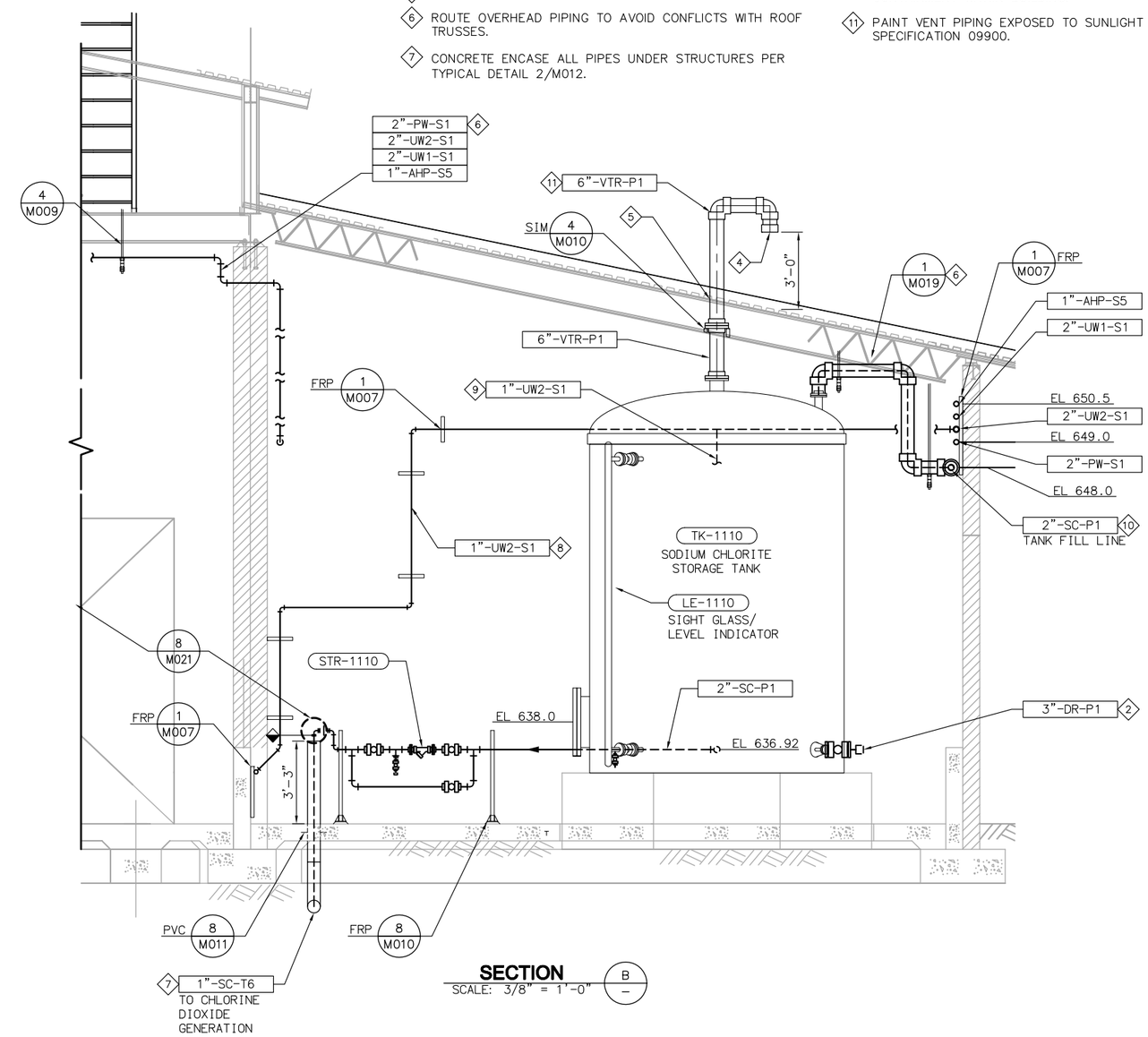

SECTION (B –)
SCALE: 3/8" = 1'-0"

EQUIPMENT TAG NUMBERS ON THIS DRAWING ARE PRECEDED W/ 07-CDO- UNLESS OTHERWISE LABELED

No.	DATE	REVISIONS	APPROVED

DESIGNED: DAH
DRAWN: RCM
CHECKED: VJR

RBF CONSULTING

carollo

IRVINE RANCH WATER DISTRICT

JIM MEYERHOFER	RCE NO. 48451	PROJECT MANAGER	DATE
CINDY MILLER	RCE NO. 58116	PROJECT MANAGER	DATE
PATRICIA UEMATSU	RCE NO. 36762	PRINCIPAL ENGINEER	DATE

IRVINE RANCH WATER DISTRICT
BAKER WATER TREATMENT PLANT
PROJECT NO. 11218

CHEMICAL BUILDING SODIUM CHLORITE ENLARGED PLAN AND SECTION

DRAWING M723
SHEET 370 OF 632

FILENAME: 8127A10-6232-M723.dwg
LAST UPDATED: 01/05/2012 01:50 PM
LAST SAVED BY: treo

NOTES

1. REFER TO M001–MECHANICAL NOTES FOR ADDITIONAL INFORMATION AND REQUIREMENTS.
2. FOR CONTINUATION OF PIPING OUTSIDE OF STRUCTURES, SEE CIVIL DRAWINGS.
3. WHERE NO CONSTRUCTION DETAILS ARE SHOWN OR NOTED FOR ANY PART OF THE WORK, DETAILS SHALL BE THE SAME AS FOR OTHER SIMILAR WORK.

KEY NOTES

1. PVC TUBING IN 4–INCH PVC CARRIER PIPE.
2. INSTALL QUICK DISCONNECT ON ENDS OF PIPE FOR 3" HOSE CONNECTION.
3. SEE PLUMBING DRAWINGS FOR FLOOR DRAIN, SAFETY SHOWER, AND POTABLE WATER LOCATIONS AND PIPING.
4. COVER VENT PIPE ENDS W/NO. 24 MESH, 316 SST SCREEN SECURED IN PLACE WITH BOLTED RETAINER RING.
5. INSTALL ROOF PENETRATIONS PER ARCHITECTURAL DRAWINGS.
6. ROUTE OVERHEAD PIPING TO AVOID CONFLICTS WITH ROOF TRUSSES.
7. CONCRETE ENCASE ALL PIPES UNDER STRUCTURES PER TYPICAL DETAIL 2/M012.
8. FIELD ROUTE AND TERMINATE 1"–UW2–S1 LINE INSIDE CONTAINMENT AREA WITH ISOLATION BALL VALVE, ANTI–SIPHON VALVE, AND 1" QUICK–DISCONNECT THAT IS ACCESSIBLE TO FLUSHING CONNECTIONS IN PIPING.
9. FIELD ROUTE 1"–UW2–S1 LINE TO TANK OVERFLOW VAPOR SEAL CONNECTION PER DETAIL 6/M020.
10. DOUBLE CONTAIN CHEMICAL TANK FILL PIPING. REFER TO SPECIFICATION 15293. PROVIDE 1–INCH VALVED DRAIN W/CLEAR SIGHT GLASS AT LOW POINT OF CONTAINMENT PIPING WITHIN BUILDING.
11. PAINT VENT PIPING EXPOSED TO SUNLIGHT PER SPECIFICATION 09900.

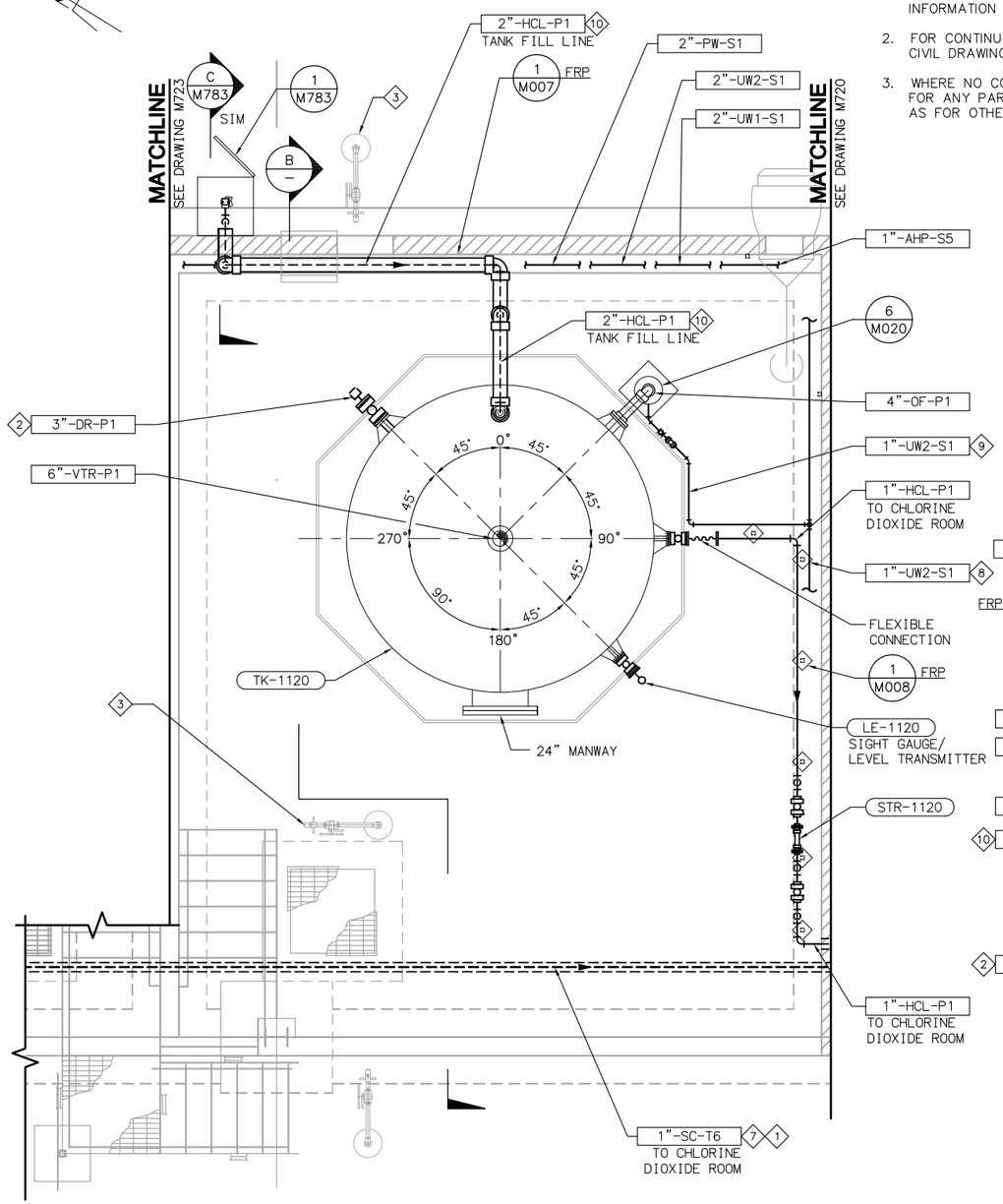

PLAN - HYDROCHLORIC ACID (A / M710)
SCALE: 3/8" = 1'-0"

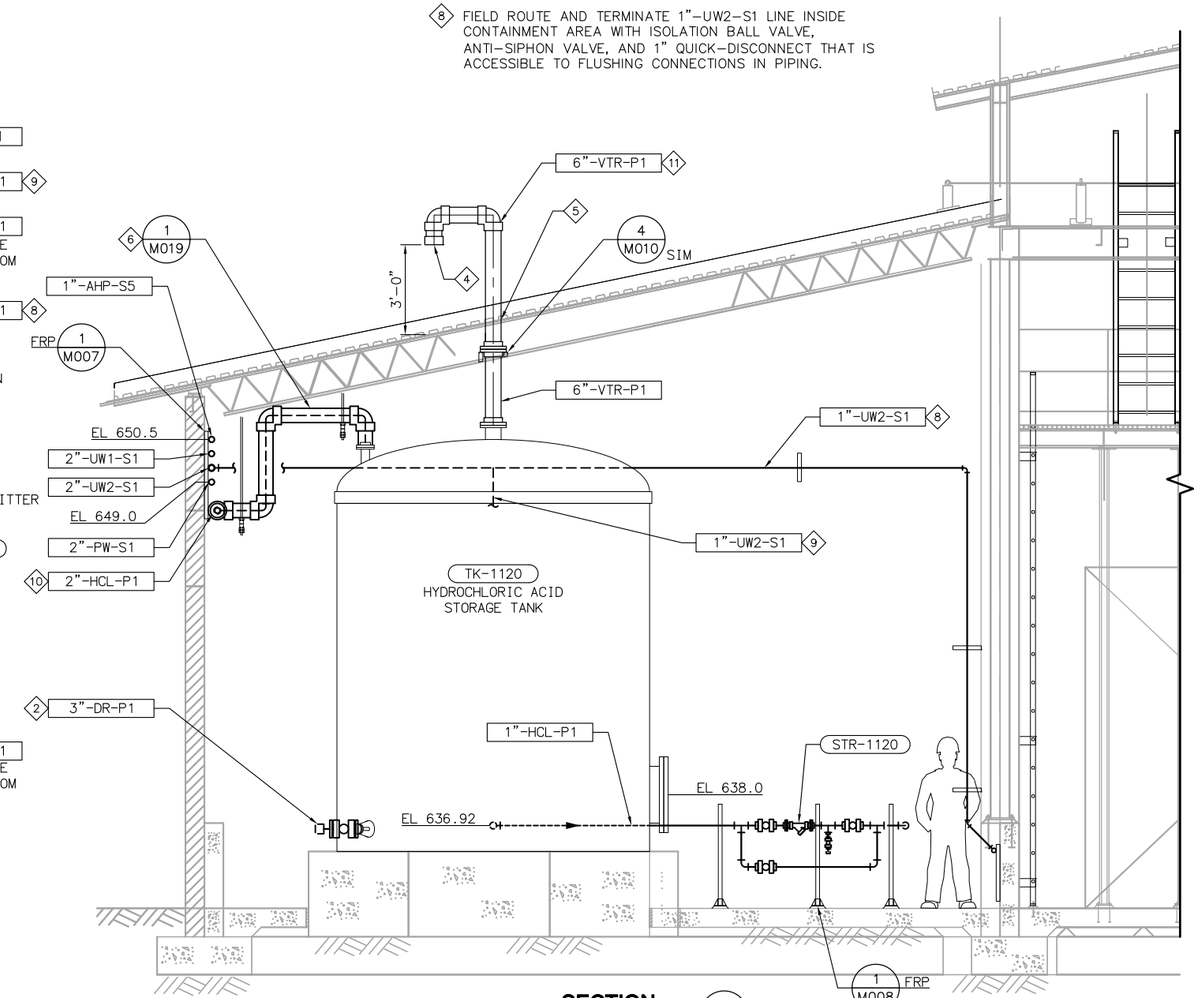

SECTION (B / –)
SCALE: 3/8" = 1'-0"

EQUIPMENT TAG NUMBERS ON THIS DRAWING ARE PRECEDED W/ 07-CDO UNLESS OTHERWISE LABELED

No.	DATE	REVISIONS	APPROVED

DESIGNED: DAH
DRAWN: RCM
CHECKED: VJR

RBF CONSULTING
carollo
IRVINE RANCH WATER DISTRICT

JIM MEYERHOFER	RCE NO. 48451	PROJECT MANAGER	DATE
CINDY MILLER	RCE NO. 58116	PROJECT MANAGER	DATE
PATRICIA UEMATSU	RCE NO. 36762	PRINCIPAL ENGINEER	DATE

IRVINE RANCH WATER DISTRICT
BAKER WATER TREATMENT PLANT
PROJECT NO. 11218

CHEMICAL BUILDING
HYDROCHLORIC ACID
ENLARGED PLAN AND SECTION

DRAWING M724
SHEET 371 OF 632

FILENAME:8127A10-6232-M724.dwg
LAST UPDATED: 01/05/2012 01:50 PM
LAST SAVED BY: Irea

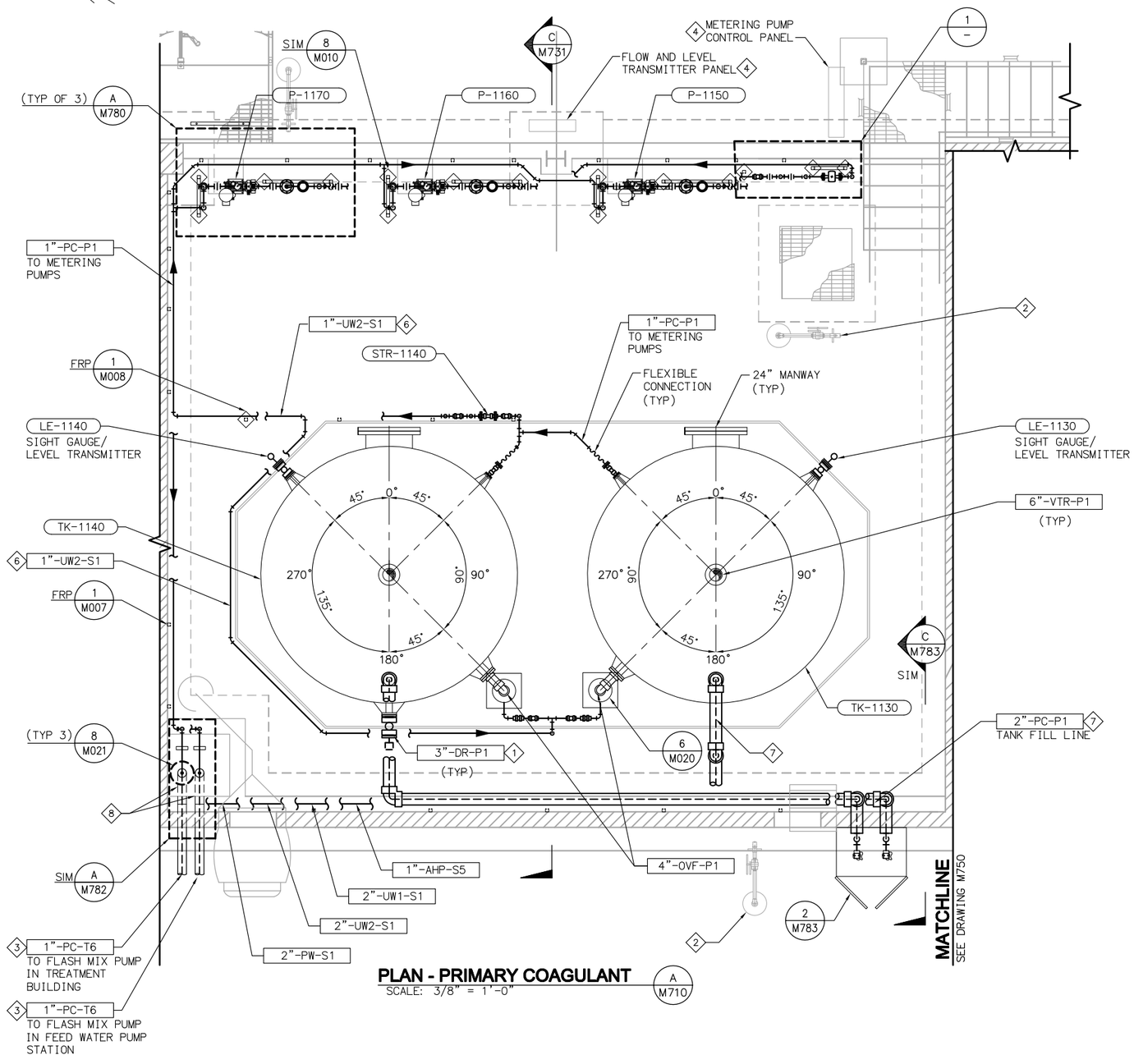

PLAN - PRIMARY COAGULANT

SCALE: 3/8" = 1'-0" (A M710)

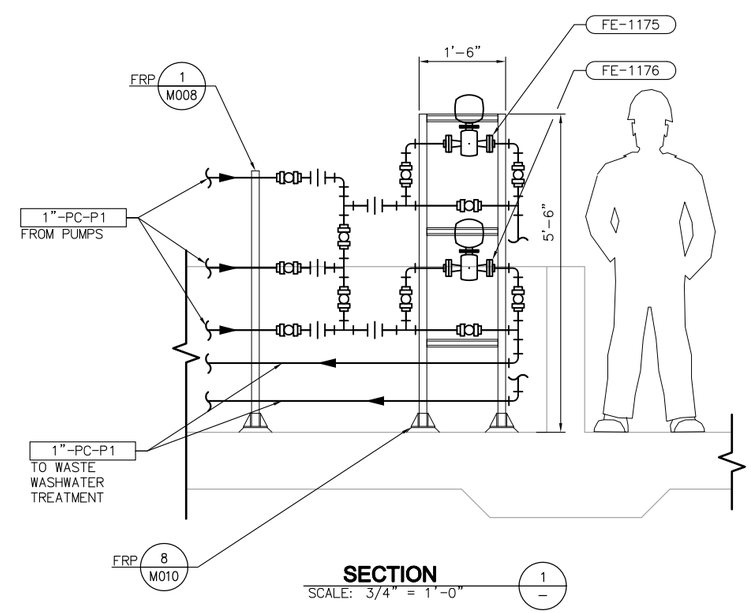

SECTION

SCALE: 3/4" = 1'-0" (1 –)

NOTES

1. REFER TO M001–MECHANICAL NOTES FOR ADDITIONAL INFORMATION AND REQUIREMENTS.
2. FOR CONTINUATION OF PIPING OUTSIDE OF STRUCTURES, SEE CIVIL DRAWINGS.
3. WHERE NO CONSTRUCTION DETAILS ARE SHOWN OR NOTED FOR ANY PART OF THE WORK, DETAILS SHALL BE THE SAME AS FOR OTHER SIMILAR WORK.

KEY NOTES

1. INSTALL QUICK DISCONNECT ON ENDS OF PIPE FOR 3" HOSE CONNECTION.
2. SEE PLUMBING DRAWINGS FOR FLOOR DRAIN, SAFETY SHOWER, AND POTABLE WATER LOCATIONS AND PIPING.
3. CONCRETE ENCASE ALL PIPES UNDER STRUCTURES PER TYPICAL DETAIL 2/M012.
4. SEE ELECTRICAL/INSTRUMENTATION DRAWINGS FOR ADDITIONAL INFORMATION. COORDINATE INSTALLATION OF PANELS AS TO NOT BLOCK ACCESS TO DISCHARGE PIPING AND APPURTENANCES.
5. FIELD ROUTE AND TERMINATE 1"–UW2–S1 LINE INSIDE CONTAINMENT AREA WITH ISOLATION BALL VALVE AND 1" QUICK DISCONNECT THAT IS ACCESSIBLE TO FLUSHING CONNECTIONS IN PIPING.
6. FIELD ROUTE 1"–UW2–S1 LINE TO TANK OVERFLOW VAPOR SEAL FILL CONNECTION PER DETAIL 6/M020.
7. DOUBLE–CONTAIN CHEMICAL TANK FILL PIPING. REFER TO SPECIFICATION 15293. PROVIDE 1–INCH VALVED DRAIN W/CLEAR SIGHT GLASS AT LOW POINT OF CONTAINMENT PIPING WITHIN BUILDING.
8. PVC TUBING IN 4–INCH CARRIER PIPE.

EQUIPMENT TAG NUMBERS ON THIS DRAWING ARE PRECEDED W/ 07-PC- UNLESS OTHERWISE LABELED

No.	DATE	REVISIONS	APPROVED

DESIGNED: DAH
DRAWN: RCM
CHECKED: VJR

RBF CONSULTING

carollo

IRVINE RANCH WATER DISTRICT

JIM MEYERHOFER	RCE NO. 48451	PROJECT MANAGER	DATE
CINDY MILLER	RCE NO. 58116	PROJECT MANAGER	DATE
PATRICIA UEMATSU	RCE NO. 36762	PRINCIPAL ENGINEER	DATE

IRVINE RANCH WATER DISTRICT
BAKER WATER TREATMENT PLANT
PROJECT NO. 11218

CHEMICAL BUILDING PRIMARY COAGULANT ENLARGED PLAN AND SECTION

DRAWING M730

SHEET 372 OF 632

FILENAME: 8127A10-6232-M730.dwg
LAST UPDATED: 01/05/2012 01:55 PM
LAST SAVED BY: Irea

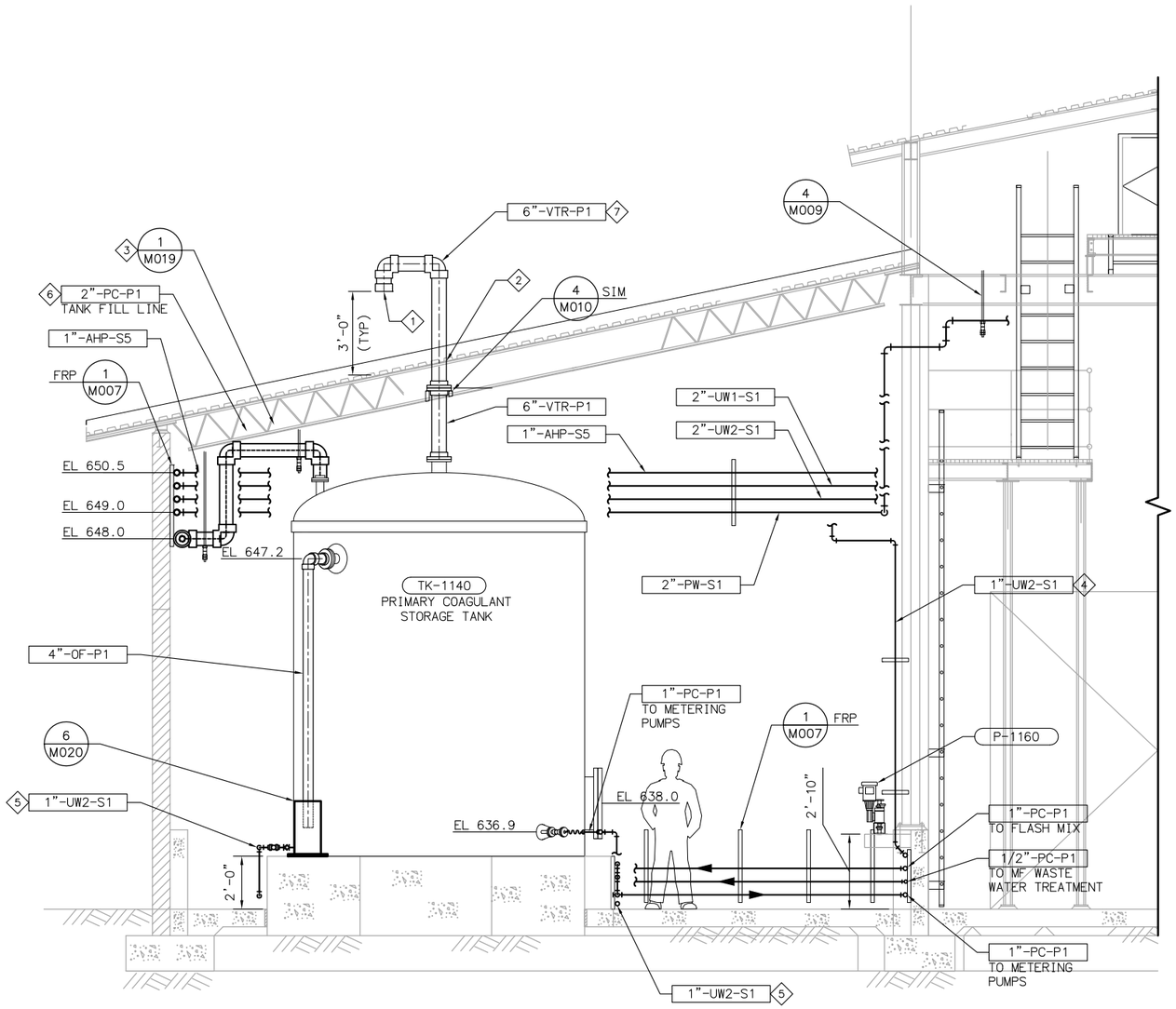

SECTION C/—
SCALE: 3/8" = 1'-0"

NOTES

1. REFER TO M001–MECHANICAL NOTES FOR ADDITIONAL INFORMATION AND REQUIREMENTS.
2. FOR CONTINUATION OF PIPING OUTSIDE OF STRUCTURES, SEE CIVIL DRAWINGS.
3. WHERE NO CONSTRUCTION DETAILS ARE SHOWN OR NOTED FOR ANY PART OF THE WORK, DETAILS SHALL BE THE SAME AS FOR OTHER SIMILAR WORK.

KEY NOTES

1. COVER VENT PIPE ENDS W/NO. 24 MESH, 316 SST SCREEN SECURED IN PLACE WITH BOLTED RETAINER RING.
2. INSTALL ROOF PENETRATIONS PER ARCHITECTURAL DRAWINGS.
3. ROUTE OVERHEAD PIPING TO AVOID CONFLICTS WITH ROOF TRUSSES.
4. FIELD ROUTE AND TERMINATE 1"–UW2–S1 LINE INSIDE CONTAINMENT AREA WITH ISOLATION BALL VALVE AND 1" QUICK DISCONNECT THAT IS ACCESSIBLE TO FLUSHING CONNECTIONS IN PIPING.
5. FIELD ROUTE 1"–UW2–S1 LINE TO TANK OVERFLOW VAPOR SEAL FILL CONNECTION PER DETAIL 6/M020.
6. DOUBLE–CONTAIN CHEMICAL TANK FILL PIPING. REFER TO SPECIFICATION 15293. PROVIDE 1–INCH VALVED DRAIN W/CLEAR SIGHT GLASS AT LOW POINT OF CONTAINMENT PIPING WITHIN BUILDING.
7. PAINT VENT PIPING EXPOSED TO SUNLIGHT PER SPECIFICATION 09900.

EQUIPMENT TAG NUMBERS ON THIS DRAWING ARE PRECEDED W/ 07–PC– UNLESS OTHERWISE LABELED

No.	DATE	REVISIONS	APPROVED

DESIGNED: DAH
DRAWN: RCM
CHECKED: VJR

RBF CONSULTING

carollo

IRVINE RANCH WATER DISTRICT

JIM MEYERHOFER	RCE NO. 48451	PROJECT MANAGER	DATE
CINDY MILLER	RCE NO. 58116	PROJECT MANAGER	DATE
PATRICIA UEMATSU	RCE NO. 36762	PRINCIPAL ENGINEER	DATE

IRVINE RANCH WATER DISTRICT
BAKER WATER TREATMENT PLANT
PROJECT NO. 11218

CHEMICAL BUILDING PRIMARY COAGULANT SECTIONS

DRAWING
M731
SHEET
373 OF 632

LAST SAVED BY: treo LAST UPDATED: 01/05/2012 10:54 AM FILENAME:8127A10–6232–M731.dwg

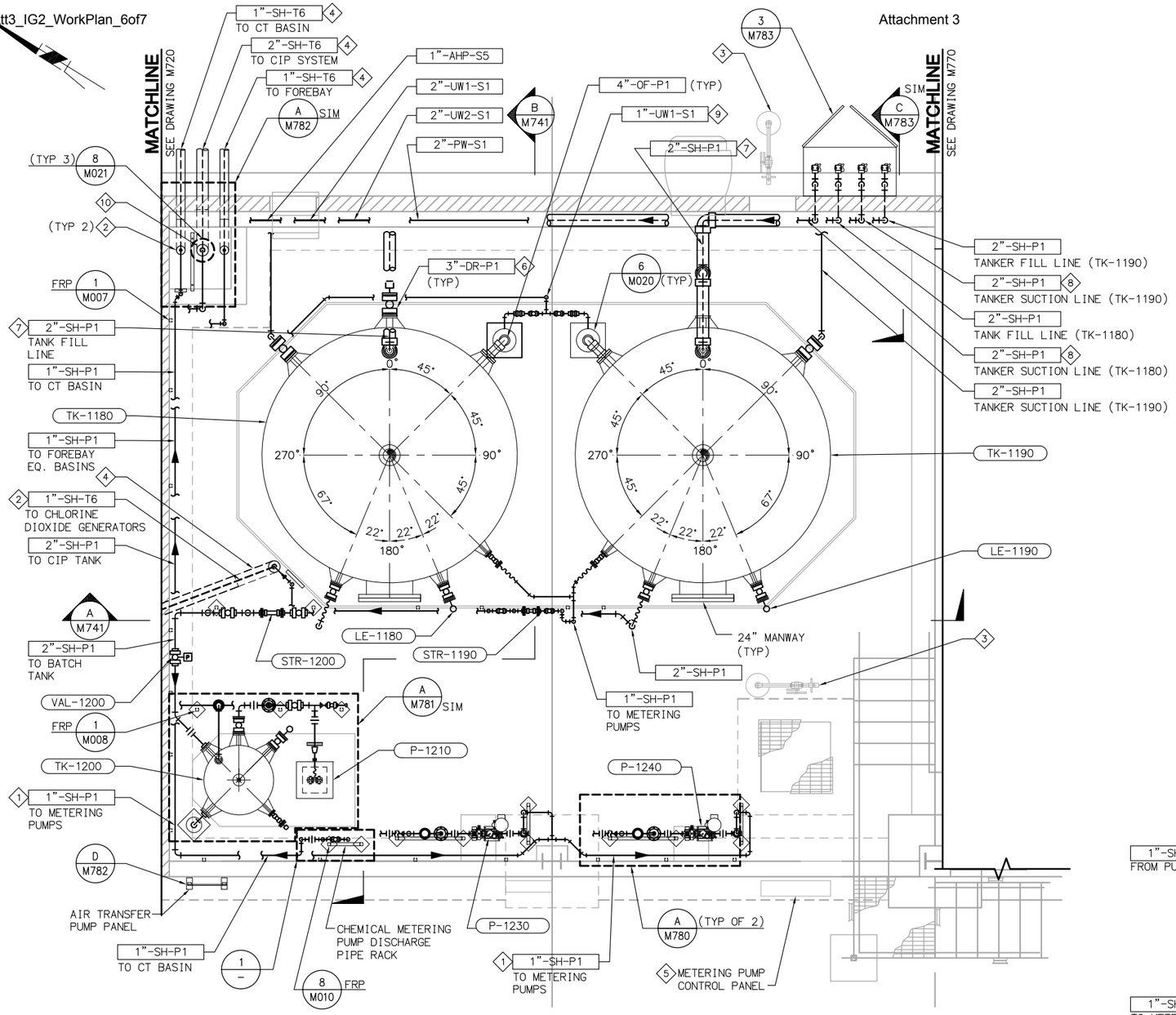

PLAN - SODIUM HYPOCHLORITE (A / M710)

SCALE: 3/8" = 1'-0"

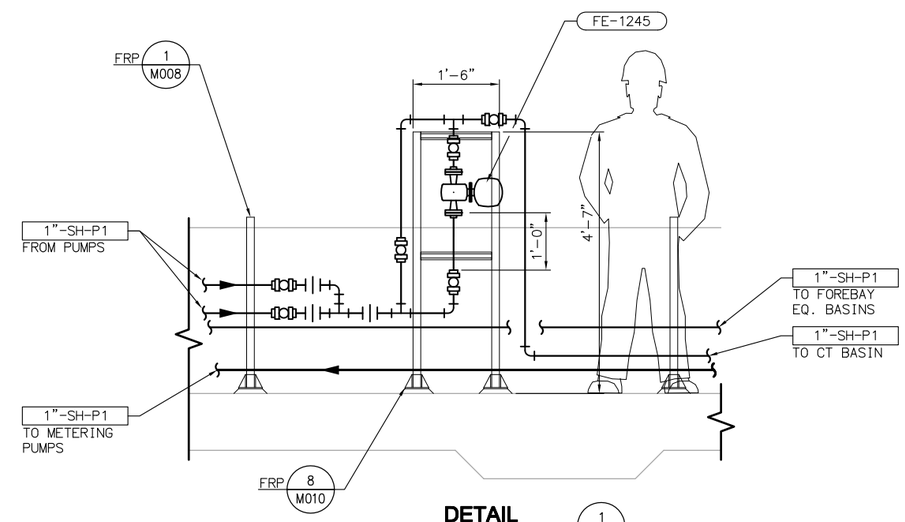

DETAIL (1 / –)

SCALE: 3/4" = 1'-0"

NOTES

SOC WMA

1. REFER TO M001–MECHANICAL NOTES FOR ADDITIONAL INFORMATION AND REQUIREMENTS.
2. FOR CONTINUATION OF PIPING OUTSIDE OF STRUCTURES, SEE CIVIL DRAWINGS.
3. WHERE NO CONSTRUCTION DETAILS ARE SHOWN OR NOTED FOR ANY PART OF THE WORK, DETAILS SHALL BE THE SAME AS FOR OTHER SIMILAR WORK.

KEY NOTES

1. INSTALL SH CHEMICAL PUMP SUCTION PIPING AT UNIFORM SLOPE TO TANK. SLOPE ALL PIPING ON PRE–ASSEMBLED RACK DEFINED ON M780.
2. PVC TUBING IN 4–INCH PVC CARRIER PIPE.
3. SEE PLUMBING DRAWINGS FOR FLOOR DRAIN, SAFETY SHOWER AND POTABLE WATER LOCATIONS AND PIPING.
4. CONCRETE ENCASE ALL PIPES UNDER STRUCTURES PER TYPICAL DETAIL 2/M012.
5. SEE ELECTRICAL/INSTRUMENTATION DRAWIINGS FOR ADDITIONAL INFORMATION. COORDINATE INSTALLATION OF PANELS AS TO NOT BLOCK ACCESS TO DISCHARGE PIPING AND APPURTENANCES.
6. INSTALL QUICK DISCONNECT ON ENDS OF PIPE FOR 3" HOSE CONNECTION.
7. DOUBLE CONTAIN CHEMICAL TANK FILL PIPING. REFER TO SPECIFICATION 15293. PROVIDE 1–INCH VALVED DRAIN W/CLEAR SIGHT GLASS AT LOW POINT OF CONTAINMENT PIPING WITHIN BUILDING.
8. PROVIDE VALVED DRAIN AT LOW POINT IN TANKER SUCTION PIPING WITHIN BUILDING. PROVIDE UNIONS IN PIPING TO FACILITATE REMOVAL OF 2" SPOOL PIECE BETWEEN STORAGE TANK AND WALL.
9. FIELD ROUTE 1"–UW1–S1 LINE TO TANK OVERFLOW VAPOR SEAL CONNECTION PER DETAIL 6/M020.
10. PVC TUBING IN 6–INCH PVC CARRIER PIPE.

EQUIPMENT TAG NUMBERS ON THIS DRAWING ARE PRECEDED W/ 07–SH– UNLESS OTHERWISE LABELED

No.	DATE	REVISIONS	APPROVED

DESIGNED: DAH
DRAWN: RCM
CHECKED: VJR

RBF CONSULTING

carollo

IRVINE RANCH WATER DISTRICT

JIM MEYERHOFER	RCE NO. 48451	PROJECT MANAGER	DATE
CINDY MILLER	RCE NO. 58116	PROJECT MANAGER	DATE
PATRICIA UEMATSU	RCE NO. 36762	PRINCIPAL ENGINEER	DATE

IRVINE RANCH WATER DISTRICT
BAKER WATER TREATMENT PLANT
PROJECT NO. 11218

CHEMICAL BUILDING SODIUM HYPOCHLORITE ENLARGED PLAN AND SECTION

DRAWING M740
SHEET 374 OF 632

LAST SAVED BY: trea LAST UPDATED: 01/05/2012 04:17 PM FILENAME:8127A10–6232–M740.dwg

NOTES

1. REFER TO M001–MECHANICAL NOTES FOR ADDITIONAL INFORMATION AND REQUIREMENTS.
2. FOR CONTINUATION OF PIPING OUTSIDE OF STRUCTURES, SEE CIVIL.
3. WHERE NO CONSTRUCTION DETAILS ARE SHOWN OR NOTED FOR ANY PART OF THE WORK, DETAILS SHALL BE THE SAME AS FOR OTHER SIMILAR WORK.

KEY NOTES

1. INSTALL SH CHEMICAL PUMP SUCTION PIPING AT UNIFORM SLOPE TO TANK. SLOPE ALL PIPING ON PRE–ASSEMBLED RACK DEFINED ON M780.
2. PVC TUBING IN 4–INCH PVC CARRIER PIPE.
3. INSTALL QUICK DISCONNECT ON ENDS OF PIPE FOR 3" HOSE CONNECTION.
4. COVER VENT PIPE ENDS W/NO. 24 MESH, 316 SST SCREEN SECURED IN PLACE WITH BOLTED RETAINER RING.
5. INSTALL ROOF PENETRATIONS PER ARCHITECTURAL DRAWINGS.
6. ROUTE OVERHEAD PIPING TO AVOID CONFLICTS WITH ROOF TRUSSES.
7. CONCRETE ENCASE ALL PIPES UNDER STRUCTURES PER TYPICAL DETAIL 2/M012.
8. FIELD ROUTE AND TERMINATE 1"–UW1–S1 LINE INSIDE CONTAINMENT AREA WITH ISOLATION BALL VALVE, ANTI–SIPHON VALVE, AND 1" QUICK DISCONNECT THAT IS ACCESSIBLE TO FLUSHING CONNECTIONS IN PIPING.
9. DOUBLE–CONTAIN CHEMICAL TANK FILL PIPING. REFER TO SPECIFICATION 15293. PROVIDE 1–INCH VALVED DRAIN W/CLEAR SIGHT GLASS AT LOW POINT OF CONTAINMENT PIPING WITHIN BUILDING.
10. PROVIDE VALVED DRAIN AT LOW POINT IN TANKER SUCTION PIPING WITHIN BUILDING. PROVIDE UNIONS IN PIPING TO FACILITATE REMOVAL OF 2" SPOOL PIECE BETWEEN STORAGE TANK AND WALL.
11. FIELD ROUTE 1"–UW1–S1 LINE TO TANK OVERFLOW VAPOR SEAL CONNECTION PER DETAIL 6/M020.
12. PAINT VENT PIPING EXPOSED TO SUNLIGHT PER SPECIFICATION 09900.

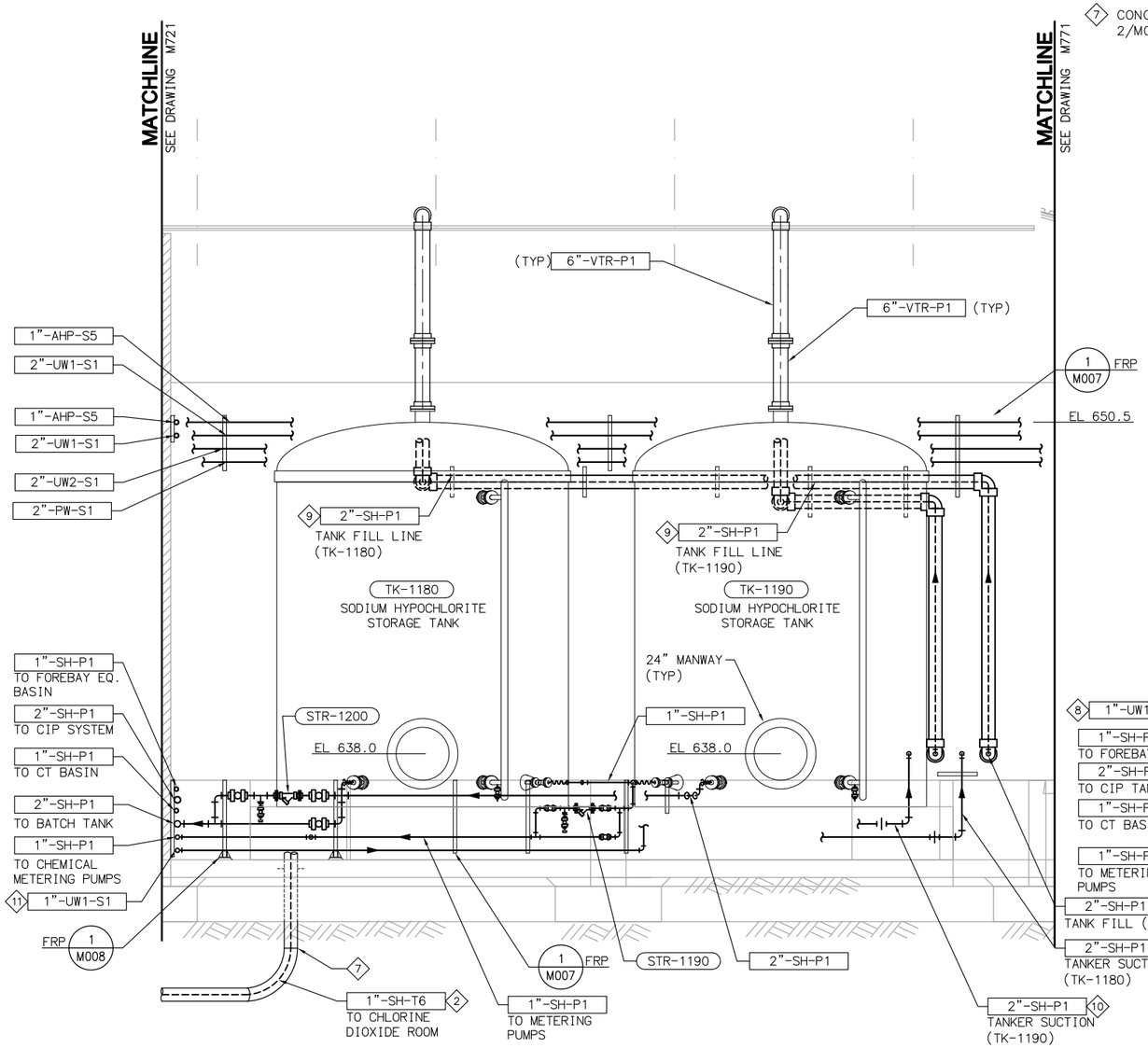

EQUIPMENT TAG NUMBERS ON THIS DRAWING ARE PRECEDED W/ 07-SH- UNLESS OTHERWISE LABELED

SECTION A M740
SCALE: 3/8" = 1'-0"

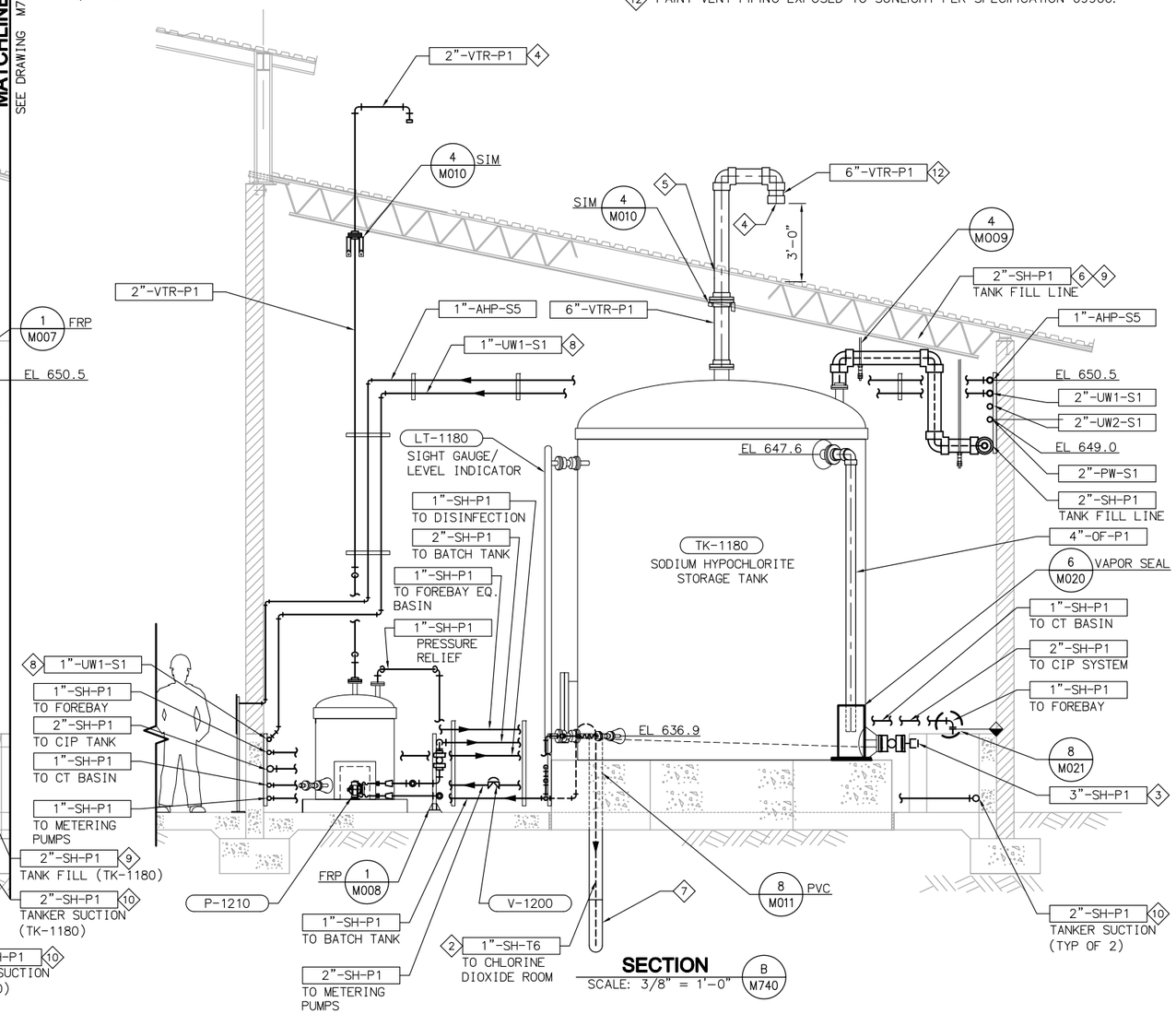

SECTION B M740
SCALE: 3/8" = 1'-0"

No.	DATE	REVISIONS	APPROVED

DESIGNED: DAH
DRAWN: RCM
CHECKED: VJR

RBF CONSULTING

carollo

IRVINE RANCH WATER DISTRICT

JIM MEYERHOFER	RCE NO. 48451	PROJECT MANAGER	DATE
CINDY MILLER	RCE NO. 58116	PROJECT MANAGER	DATE
PATRICIA UEMATSU	RCE NO. 36762	PRINCIPAL ENGINEER	DATE

IRVINE RANCH WATER DISTRICT
BAKER WATER TREATMENT PLANT
PROJECT NO. 11218

CHEMICAL BUILDING SODIUM HYPOCHLORITE SECTIONS

DRAWING M741
SHEET 375 OF 632

FILENAME: 8127A10-6232-M741.dwg
LAST UPDATED: 01/05/2012 10:57 AM
LAST SAVED BY: treg

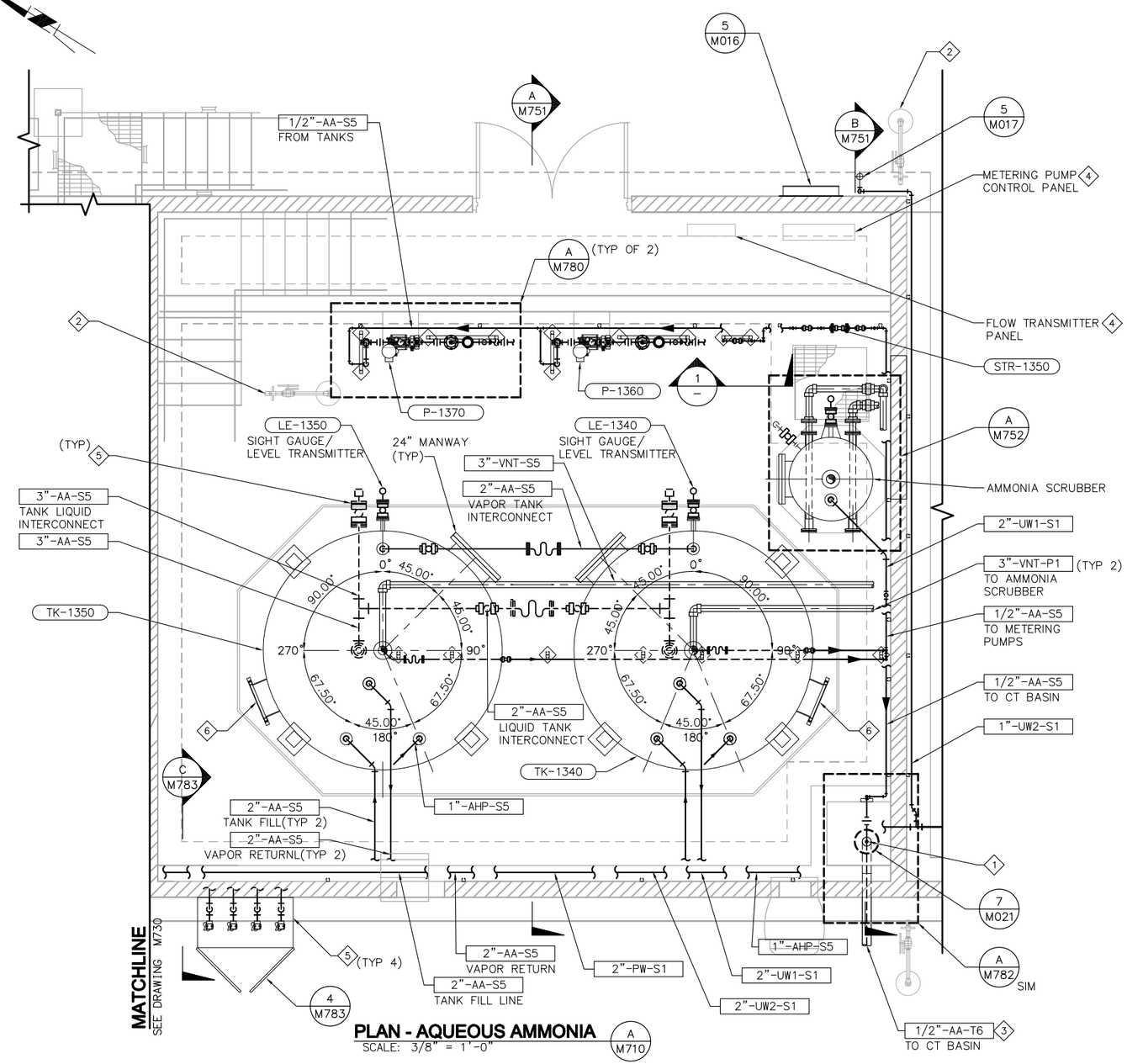

PLAN - AQUEOUS AMMONIA (A / M710)
SCALE: 3/8" = 1'-0"

NOTES

1. REFER TO M001–MECHANICAL NOTES FOR ADDITIONAL INFORMATION AND REQUIREMENTS.
2. FOR CONTINUATION OF PIPING OUTSIDE OF STRUCTURES, SEE CIVIL DRAWINGS.
3.. WHERE NO CONSTRUCTION DETAILS ARE SHOWN OR NOTED FOR ANY PART OF THE WORK, DETAILS SHALL BE THE SAME AS FOR OTHER SIMILAR WORK.

KEY NOTES

1. PVC TUBING IN 4–INCH PVC CARRIER PIPE.
2. SEE PLUMBING DRAWINGS FOR FLOOR DRAIN, SAFETY SHOWER, AND POTABLE WATER LOCATIONS AND PIPING.
3. CONCRETE ENCASE ALL PIPES UNDER STRUCTURES PER TYPICAL DETAIL 2/M012.
4. SEE ELECTRICAL/INSTRUMENTATION DRAWINGS FOR ADDITIONAL INFORMATION. COORDINATE INSTALLATION OF PANELS AS TO NOT BLOCK ACCESS TO DISCHARGE PIPING AND APPURTENANCES.
5. PROVIDE STAINLESS STEEL BALL VALVE WITH LATCH–LOCK HANDLES. LOCKABLE IN BOTH CLOSED AND OPEN POSITIONS.
6. PROVIDE FRP LADDER WITH PLATFORM TO ACCESS VALVES AT TOP OF TANK. SEE SECTION 13209.

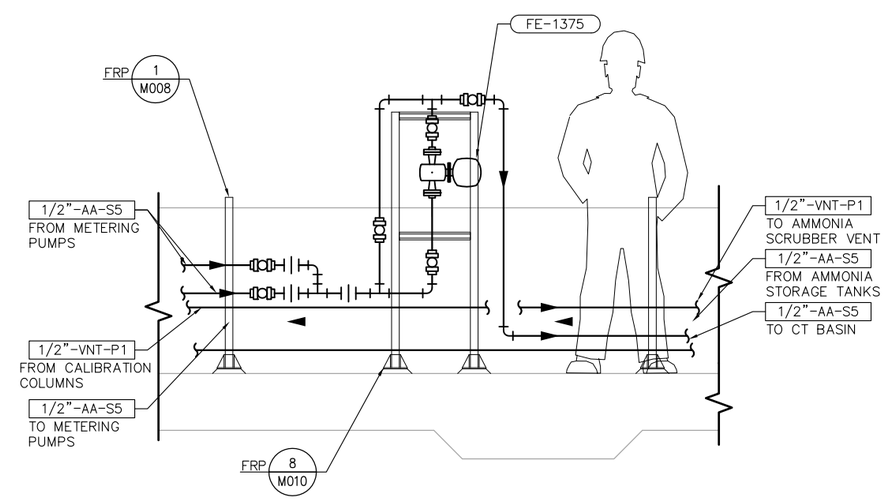

DETAIL (1 / –)
SCALE: 3/4" = 1'-0"

EQUIPMENT TAG NUMBERS ON THIS DRAWING ARE PRECEDED W/ 07-AA- UNLESS OTHERWISE LABELED

No.	DATE	REVISIONS	APPROVED

DESIGNED: DAH
DRAWN: RCM
CHECKED: VJR

RBF CONSULTING

carollo

IRVINE RANCH WATER DISTRICT

JIM MEYERHOFER	RCE NO. 48451	PROJECT MANAGER	DATE
CINDY MILLER	RCE NO. 58116	PROJECT MANAGER	DATE
PATRICIA UEMATSU	RCE NO. 36762	PRINCIPAL ENGINEER	DATE

IRVINE RANCH WATER DISTRICT
BAKER WATER TREATMENT PLANT
PROJECT NO. 11218

CHEMICAL BUILDING AQUEOUS AMMONIA ENLARGED PLAN AND SECTION

DRAWING M750
SHEET 376 OF 632

FILENAME: 8127A10-6232-M750.dwg
LAST UPDATED: 01/05/2012 02:01 PM
LAST SAVED BY: trea

NOTES

1. REFER TO M001–MECHANICAL NOTES FOR ADDITIONAL INFORMATION AND REQUIREMENTS.
4. FOR CONTINUATION OF PIPING OUTSIDE OF STRUCTURES, SEE CIVIL DRAWINGS.
5. WHERE NO CONSTRUCTION DETAILS ARE SHOWN OR NOTED FOR ANY PART OF THE WORK, DETAILS SHALL BE THE SAME AS FOR OTHER SIMILAR WORK.

KEY NOTES

1. COVER VENT PIPE ENDS W/NO. 24 MESH, 316 SST SCREEN SECURED IN PLACE WITH BOLTED RETAINER RING.
2. INSTALL ROOF PENETRATIONS PER ARCHITECTURAL DRAWINGS.
3. FIELD ROUTE AND TERMINATE 2"–UW2–S1 LINE INSIDE CONTAINMENT AREA WITH ISOLATION BALL VALVE AND 2" QUICK DISCONNECT THAT IS ACCESSIBLE TO FLUSHING CONNECTIONS IN PIPING.
4. PROVIDE STAINLESS STEEL BALL VALVE WITH LATCH LOCK HANDLE.
5. AMMONIA SCRUBBER. REFER TO DETAIL A/M752.
6. TANK PRESSURE RELIEF VALVE. REFER TO SECTION 15119.
7. TANK VACUUM RELIEF VALVE. REFER TO SECTION 15119.
8. CONNECT VENT FROM CALIBRATION COLUMNS TO AMMONIA SCRUBBER VENT.
9. PAINT VENT PIPING EXPOSED TO SUNLIGHT PER SPECIFICATION 09900.

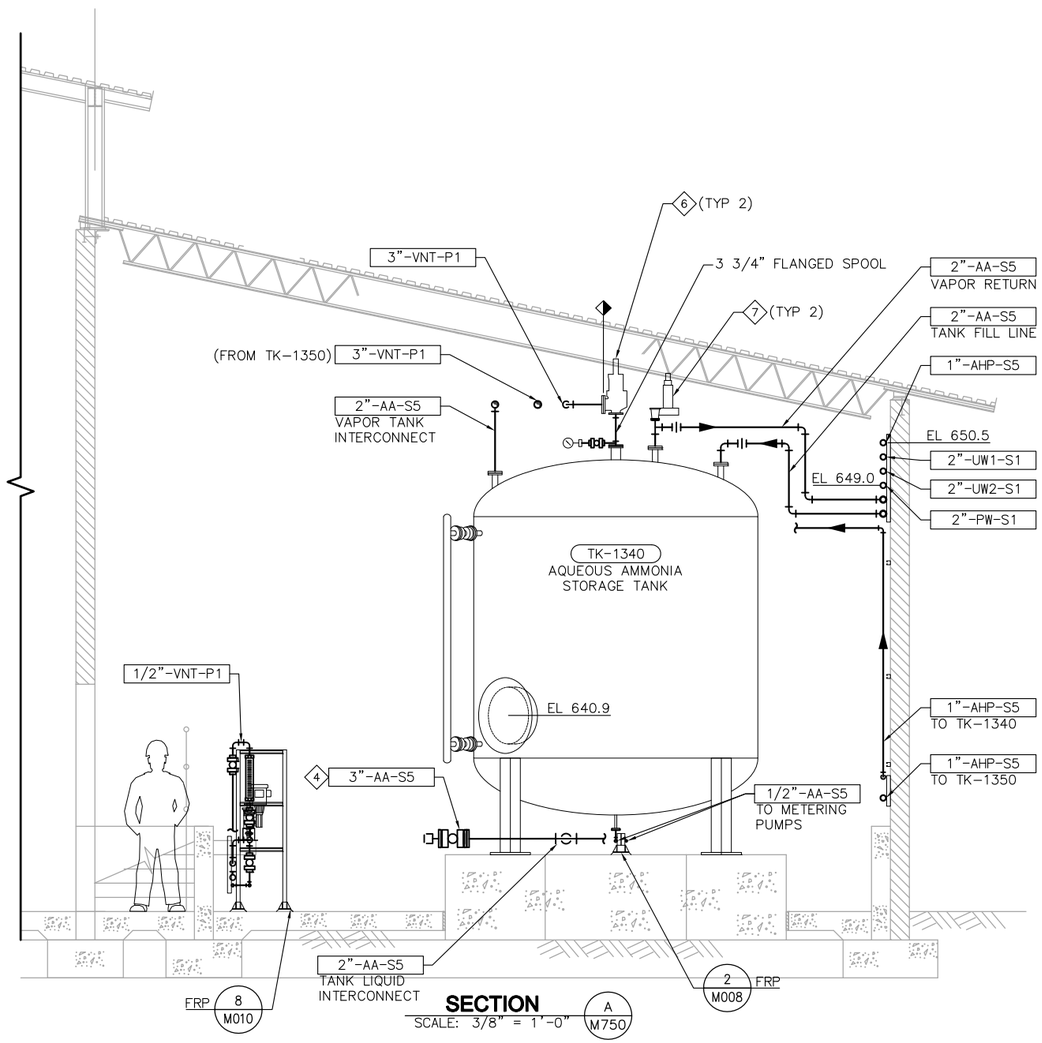

SECTION A M750
SCALE: 3/8" = 1'-0"

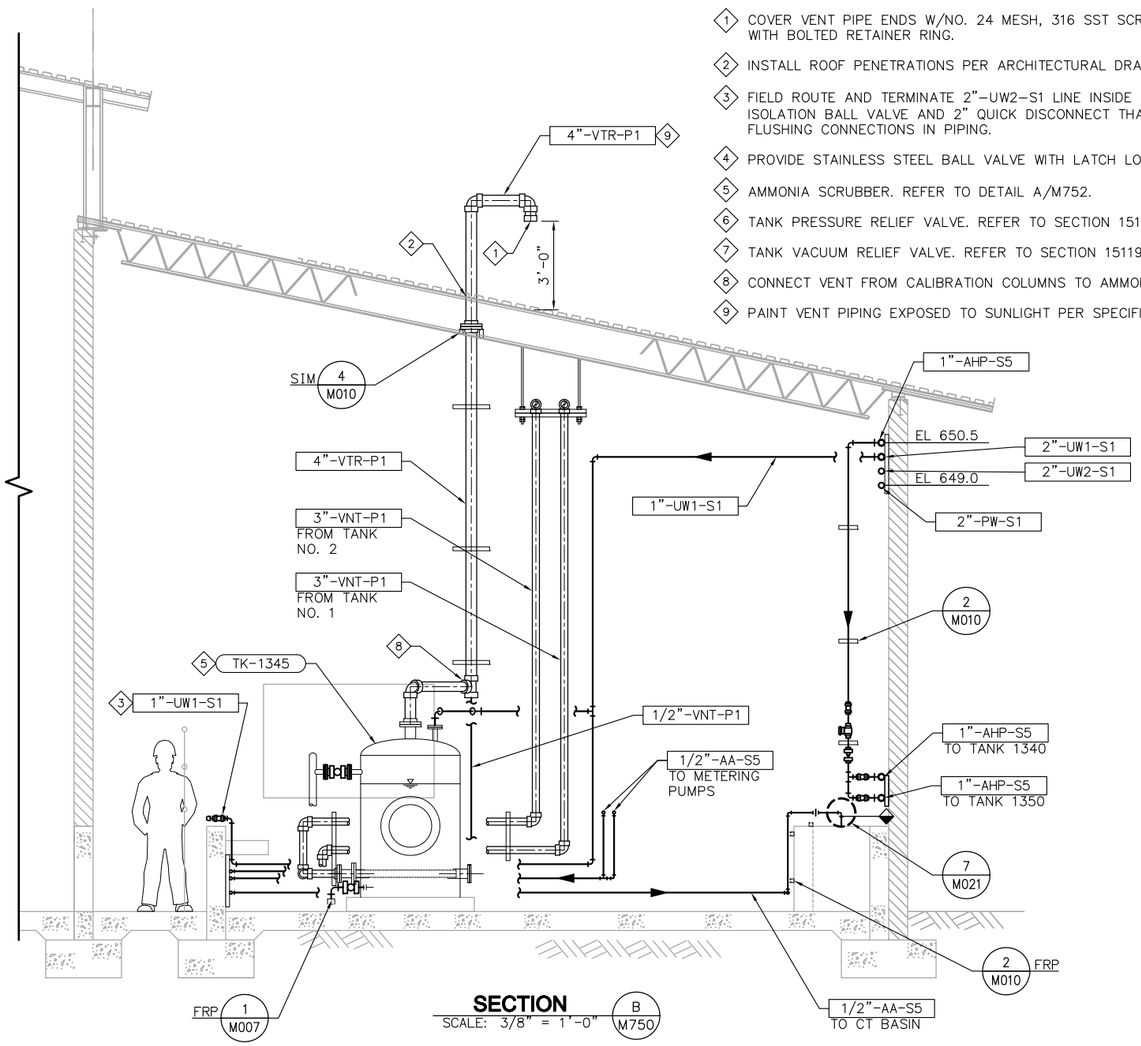

SECTION B M750
SCALE: 3/8" = 1'-0"

EQUIPMENT TAG NUMBERS ON THIS DRAWING ARE PRECEDED W/ **07-AA-** UNLESS OTHERWISE LABELED

No.	DATE	REVISIONS	APPROVED

DESIGNED: DAH
DRAWN: RCM
CHECKED: VJR

RBF CONSULTING

carollo

IRVINE RANCH WATER DISTRICT

JIM MEYERHOFER	RCE NO. 48451	PROJECT MANAGER	DATE
CINDY MILLER	RCE NO. 58116	PROJECT MANAGER	DATE
PATRICIA UEMATSU	RCE NO. 36762	PRINCIPAL ENGINEER	DATE

IRVINE RANCH WATER DISTRICT
BAKER WATER TREATMENT PLANT
PROJECT NO. 11218

CHEMICAL BUILDING AQUEOUS AMMONIA SECTIONS

DRAWING **M751**
SHEET 377 OF 632

FILENAME: 8127A10-6232-M751.dwg
LAST UPDATED: 01/05/2012 10:59 AM
LAST SAVED BY: Irea

NOTES

1. REFER TO M001–MECHANICAL NOTES FOR ADDITIONAL INFORMATION AND REQUIREMENTS.
2. FOR CONTINUATION OF PIPING OUTSIDE OF STRUCTURES, SEE CIVIL DRAWINGS.
3. WHERE NO CONSTRUCTION DETAILS ARE SHOWN OR NOTED FOR ANY PART OF THE WORK, DETAILS SHALL BE THE SAME AS FOR OTHER SIMILAR WORK.

KEY NOTES

1. FIBERGLASS REINFORCED PLASTIC AMMONIA SCRUBBER. CAPACITY 325 GAL. SEE SPECIFICATION SECTION 13206A.
2. SCRUBBER INLET FLANGE. 4–INCH SIZED TO RECEIVE SCH 40 TYPE 304 STAINLESS STEEL SPARGER PIPE.
3. STEEL SPARGER PIPE. 3–INCH SCH 40 TYPE 304 SST WITH WELDED CAP AT ONE END AND 4–INCH BLIND FLANGE DRILLED FOR 3–INCH OUTLET AT INLET. 24 SPARGER HOLES TO BE 1–INCH DIAMETER, AT 1.5–INCH CENTERS. HOLES TO BE LOCATED AT BOTTOM OF SPARGER PIPE.
4. 18–INCH MANWAY.
5. 2–INCH DRAIN WITH BALL VALVE AND 2–INCH QUICK DISCONNECT.
6. 1–INCH UTILITY WATER FILL LINE.
7. HOUSEKEEPING PAD.
8. 3–INCH WELDED TYPE 304 STAINLESS STEEL 150 LB ANSI FLANGE.
9. 4–INCH WELDED 150 LB ANSI BLIND FLANGED. DRILLED FOR 3–INCH SCH 40 STAINLESS STEEL PIPE AND WELDED BOTH SIDES.
10. 3–INCH WELDED TYPE 304 STAINLESS STEEL CAP.

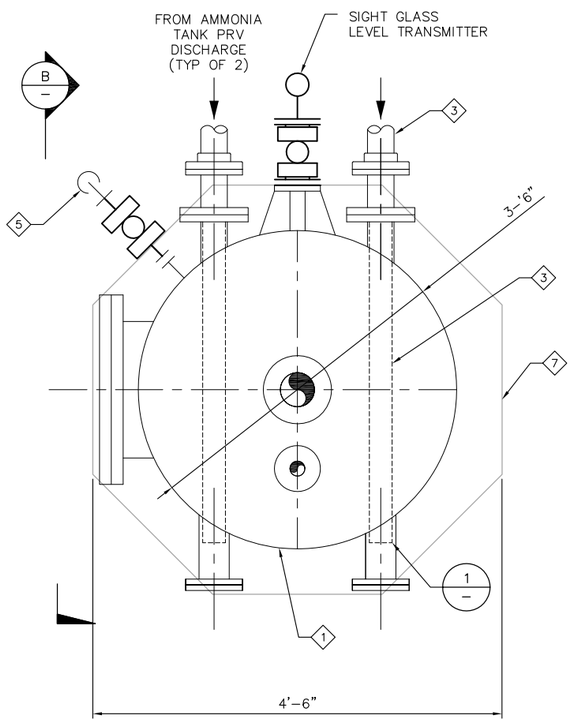

PLAN (A / M750)
SCALE: NTS

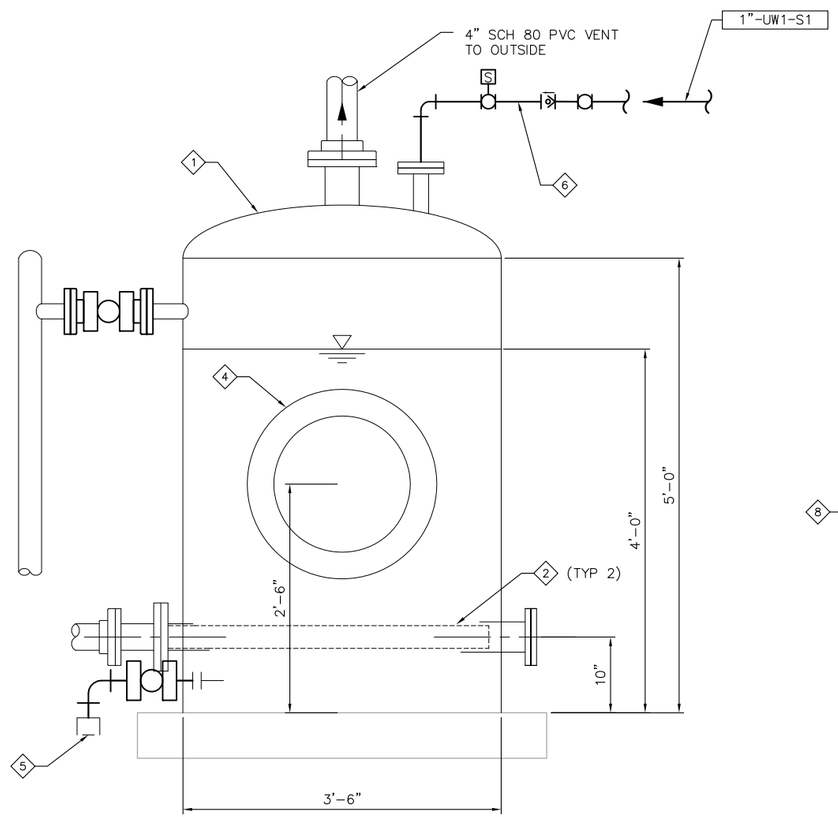

SECTION (B / –)
SCALE: NTS

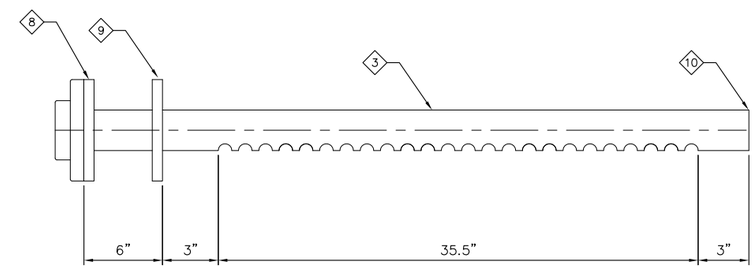

DETAIL (1 / –)
SCALE: NTS

No.	DATE	REVISIONS	APPROVED

DESIGNED: DAH
DRAWN: RCM
CHECKED: VJR

RBF CONSULTING

carollo

IRVINE RANCH WATER DISTRICT

JIM MEYERHOFER	RCE NO. 48451	PROJECT MANAGER	DATE
CINDY MILLER	RCE NO. 58116	PROJECT MANAGER	DATE
PATRICIA UEMATSU	RCE NO. 36762	PRINCIPAL ENGINEER	DATE

IRVINE RANCH WATER DISTRICT
BAKER WATER TREATMENT PLANT
PROJECT NO. 11218

CHEMICAL BUILDING - AQUEOUS AMMONIA - SCRUBBER PLAN, SECTION, AND DETAIL

DRAWING
M752
SHEET
378 OF **632**

FILENAME: 8127A10–6232–M752.dwg
LAST UPDATED: 01/31/2012 11:15 AM
LAST SAVED BY: treg

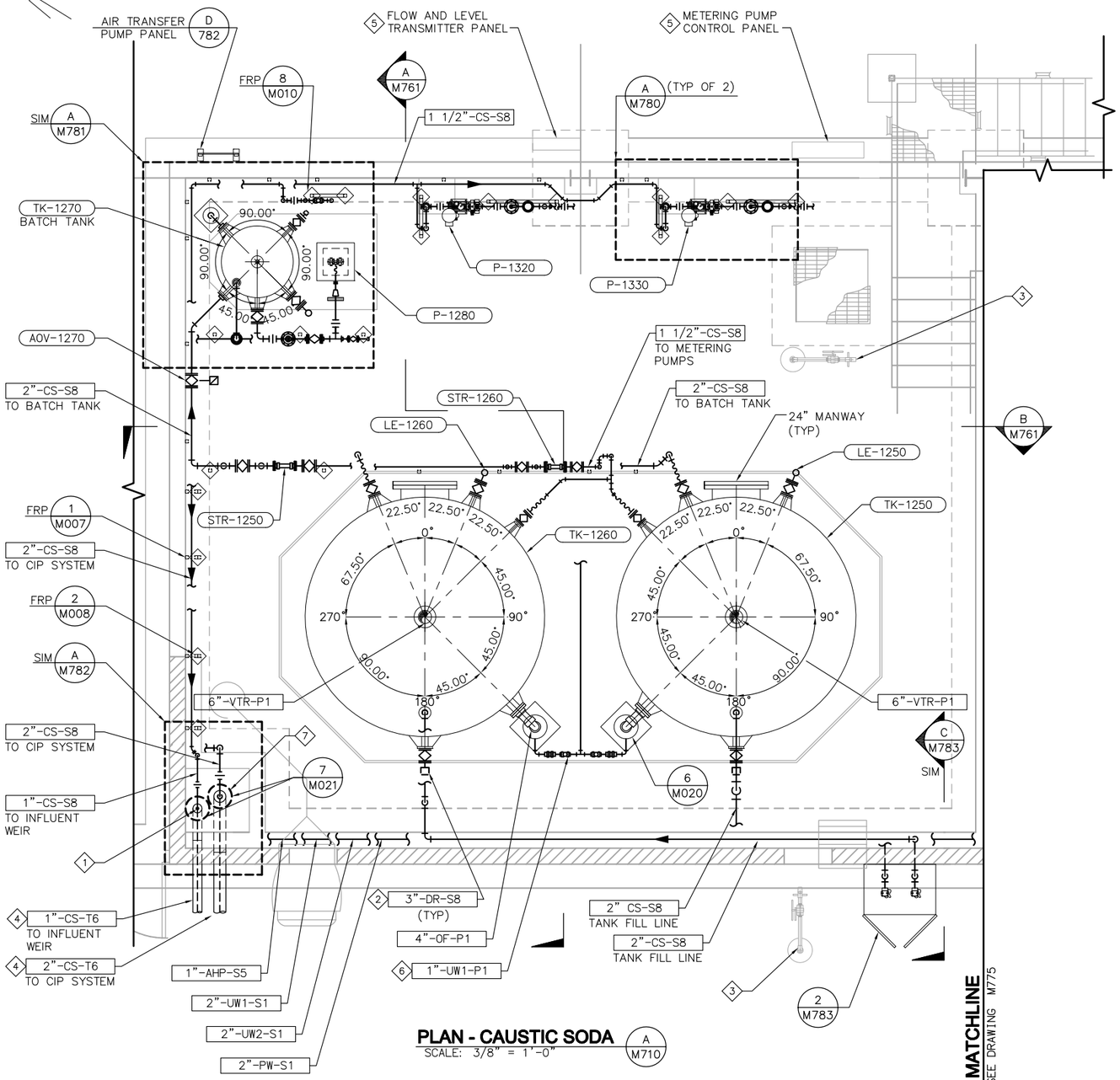

PLAN - CAUSTIC SODA

SCALE: 3/8" = 1'-0"

A
M710

NOTES

1. REFER TO M001–MECHANICAL NOTES FOR ADDITIONAL INFORMATION AND REQUIREMENTS.
2. FOR CONTINUATION OF PIPING OUTSIDE OF STRUCTURES, SEE CIVIL DRAWINGS.
3. WHERE NO CONSTRUCTION DETAILS ARE SHOWN OR NOTED FOR ANY PART OF THE WORK, DETAILS SHALL BE THE SAME AS FOR OTHER SIMILAR WORK.

KEY NOTES

1. PVC TUBING IN 4–INCH PVC CARRIER PIPE.
2. INSTALL QUICK DISCONNECT ON ENDS OF PIPE FOR 3" HOSE CONNECTION.
3. SEE PLUMBING DRAWINGS FOR FLOOR DRAIN, SAFETY SHOWER, AND POTABLE WATER LOCATIONS AND PIPING.
4. CONCRETE ENCASE ALL PIPES UNDER STRUCTURES PER TYPICAL DETAIL 2/M012.
5. SEE ELECTRICAL/INSTRUMENTATION DRAWINGS FOR ADDITIONAL INFORMATION. COORDINATE INSTALLATION OF PANELS AS TO NOT BLOCK ACCESS TO DISCHARGE PIPING AND APPURTENANCES.
6. FIELD ROUTE 1"–UW1–S1 LINES TO TANK OVERFLOW VAPOR SEAL CONNECTION PER DETAIL 6/M020.
7. PVC TUBING IN 6–INCH PVC CARRIER PIPE.

EQUIPMENT TAG NUMBERS ON THIS DRAWING ARE PRECEDED W/ 07-CS- UNLESS OTHERWISE LABELED

No.	DATE	REVISIONS	APPROVED

DESIGNED: DAH
DRAWN: RCM
CHECKED: VJR

RBF CONSULTING

carollo

IRVINE RANCH WATER DISTRICT

JIM MEYERHOFER	RCE NO. 48451	PROJECT MANAGER	DATE
CINDY MILLER	RCE NO. 58116	PROJECT MANAGER	DATE
PATRICIA UEMATSU	RCE NO. 36762	PRINCIPAL ENGINEER	DATE

IRVINE RANCH WATER DISTRICT
BAKER WATER TREATMENT PLANT
PROJECT NO. 11218

CHEMICAL BUILDING
CAUSTIC SODA
ENLARGED PLAN AND SECTION

DRAWING
M760
SHEET
379 OF 632

FILENAME: 8127A10-6232-M760.dwg
LAST UPDATED: 01/05/2012 02:02 PM
LAST SAVED BY: treq

NOTES

1. REFER TO M001–MECHANICAL NOTES FOR ADDITIONAL INFORMATION AND REQUIREMENTS.
2. FOR CONTINUATION OF PIPING OUTSIDE OF STRUCTURES, SEE CIVIL DRAWINGS.
3. WHERE NO CONSTRUCTION DETAILS ARE SHOWN OR NOTED FOR ANY PART OF THE WORK, DETAILS SHALL BE THE SAME AS FOR OTHER SIMILAR WORK.

KEY NOTES

1. COVER VENT PIPE ENDS W/NO. 24 MESH, 316 SST SCREEN SECURED IN PLACE WITH BOLTED RETAINER RING.
2. INSTALL ROOF PENETRATIONS PER ARCHITECTURAL DRAWINGS.
3. ROUTE OVERHEAD PIPING TO AVOID CONFLICTS WITH ROOF TRUSSES.
4. FIELD ROUTE AND TERMINATE 2"–UW1–S1 LINE INSIDE CONTAINMENT AREA WITH ISOLATION BALL VALVE, ANTI–SIPHON VALVE, AND 2" QUICK DISCONNECT THAT IS ACCESSIBLE TO FLUSHING CONNECTIONS IN PIPING.
5. FIELD ROUTE 1"–UW1–S1 LINE TO TANK OVERFLOW VAPOR SEAL CONNECTION PER DETAIL 6/M020.
6. PAINT VENT PIPING EXPOSED TO SUNLIGHT PER SPECIFICATION 09900.

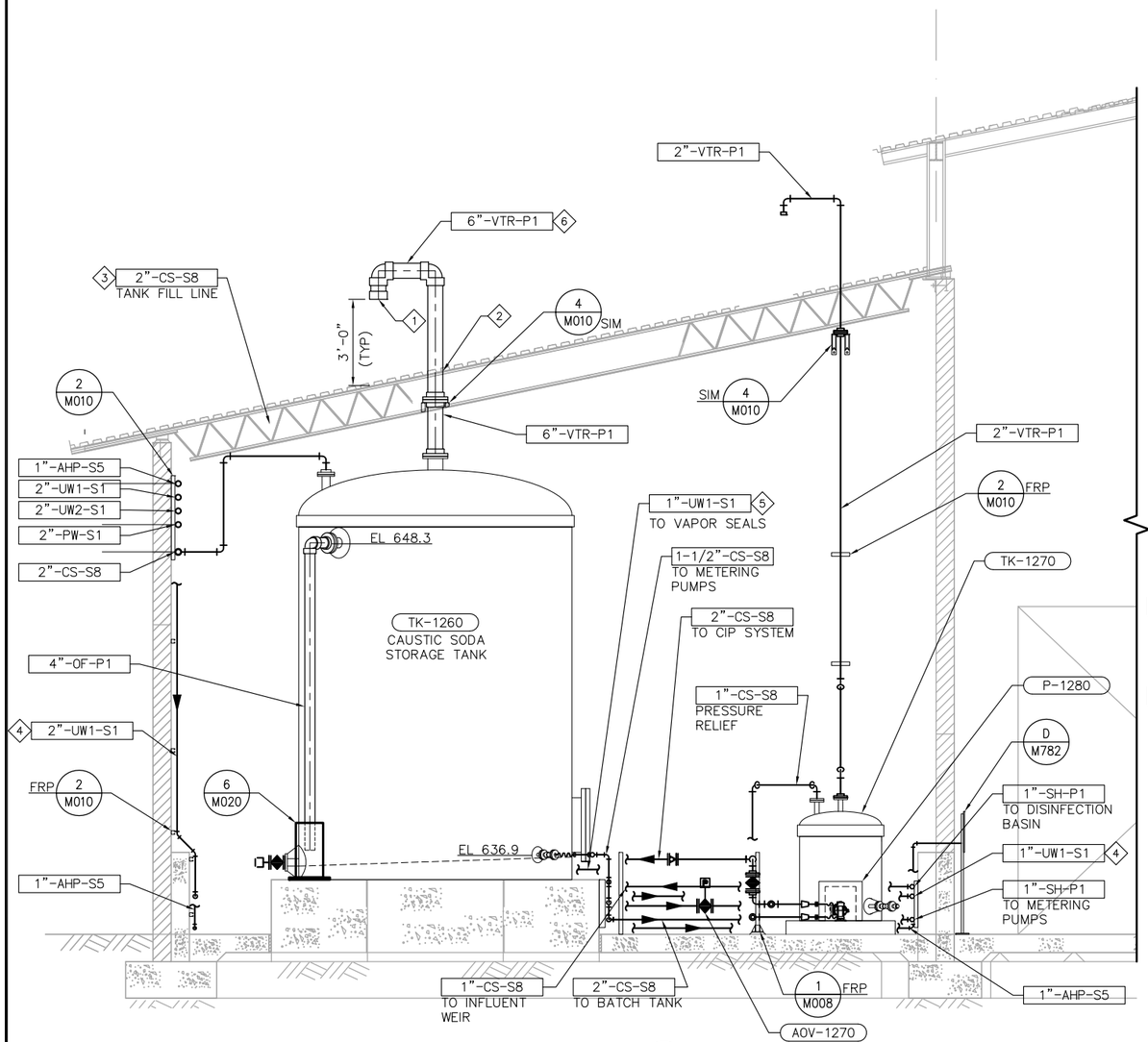

SECTION A M760
SCALE: 3/8" = 1'-0"

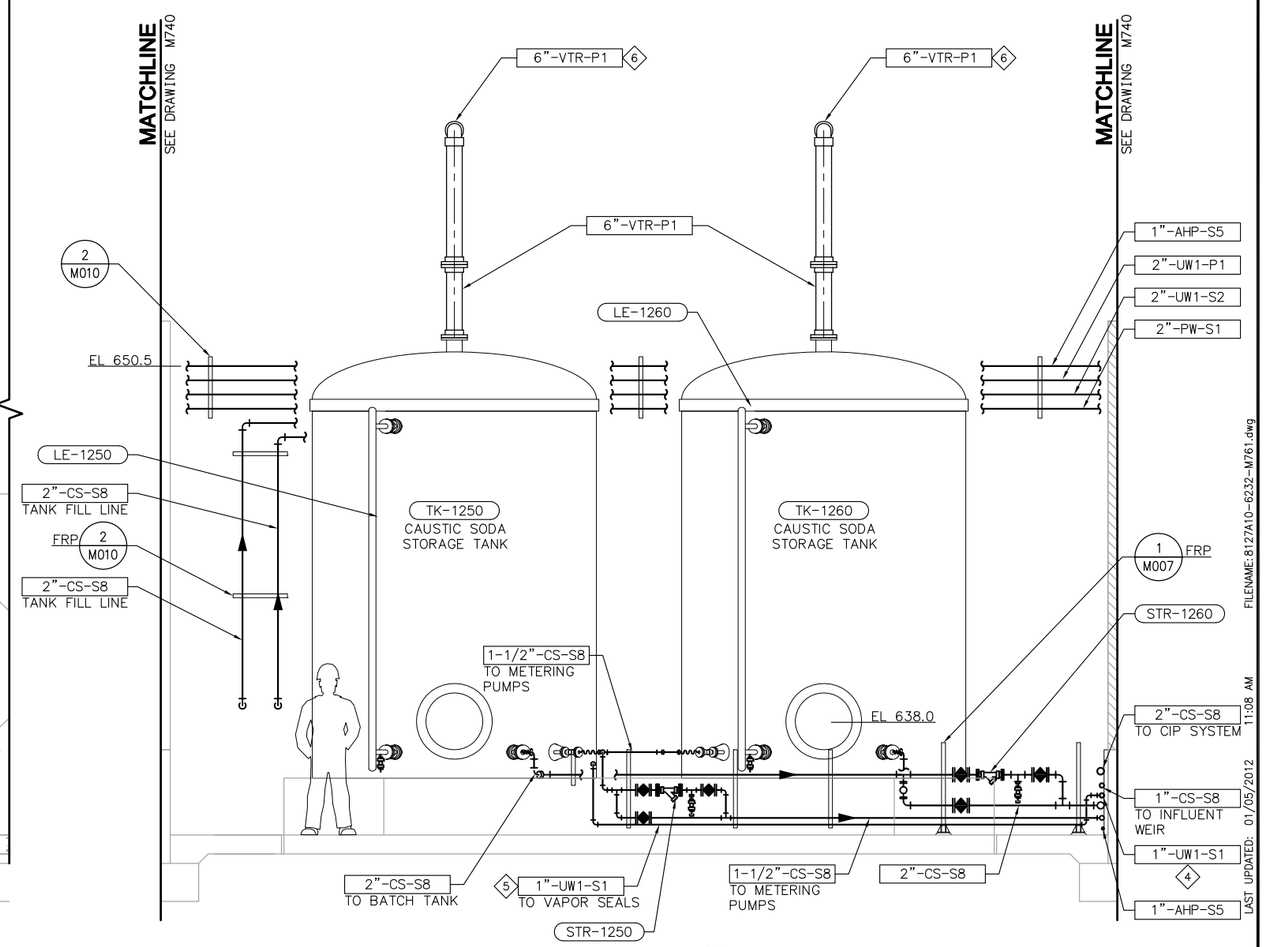

SECTION B M760
SCALE: 3/8" = 1'-0"

EQUIPMENT TAG NUMBERS ON THIS DRAWING ARE PRECEDED W/ 07-CS- UNLESS OTHERWISE LABELED

No.	DATE	REVISIONS	APPROVED

DESIGNED: DAH
DRAWN: RCM
CHECKED: VJR

RBF CONSULTING

carollo

IRVINE RANCH WATER DISTRICT

JIM MEYERHOFER	RCE NO. 48451	PROJECT MANAGER	DATE
CINDY MILLER	RCE NO. 58116	PROJECT MANAGER	DATE
PATRICIA UEMATSU	RCE NO. 36762	PRINCIPAL ENGINEER	DATE

IRVINE RANCH WATER DISTRICT
BAKER WATER TREATMENT PLANT
PROJECT NO. 11218

CHEMICAL BUILDING CAUSTIC SODA SECTIONS

DRAWING M761
SHEET 380 OF 632

FILENAME: 8127A10-6232-M761.dwg
LAST UPDATED: 01/05/2012 11:08 AM
LAST SAVED BY: trea

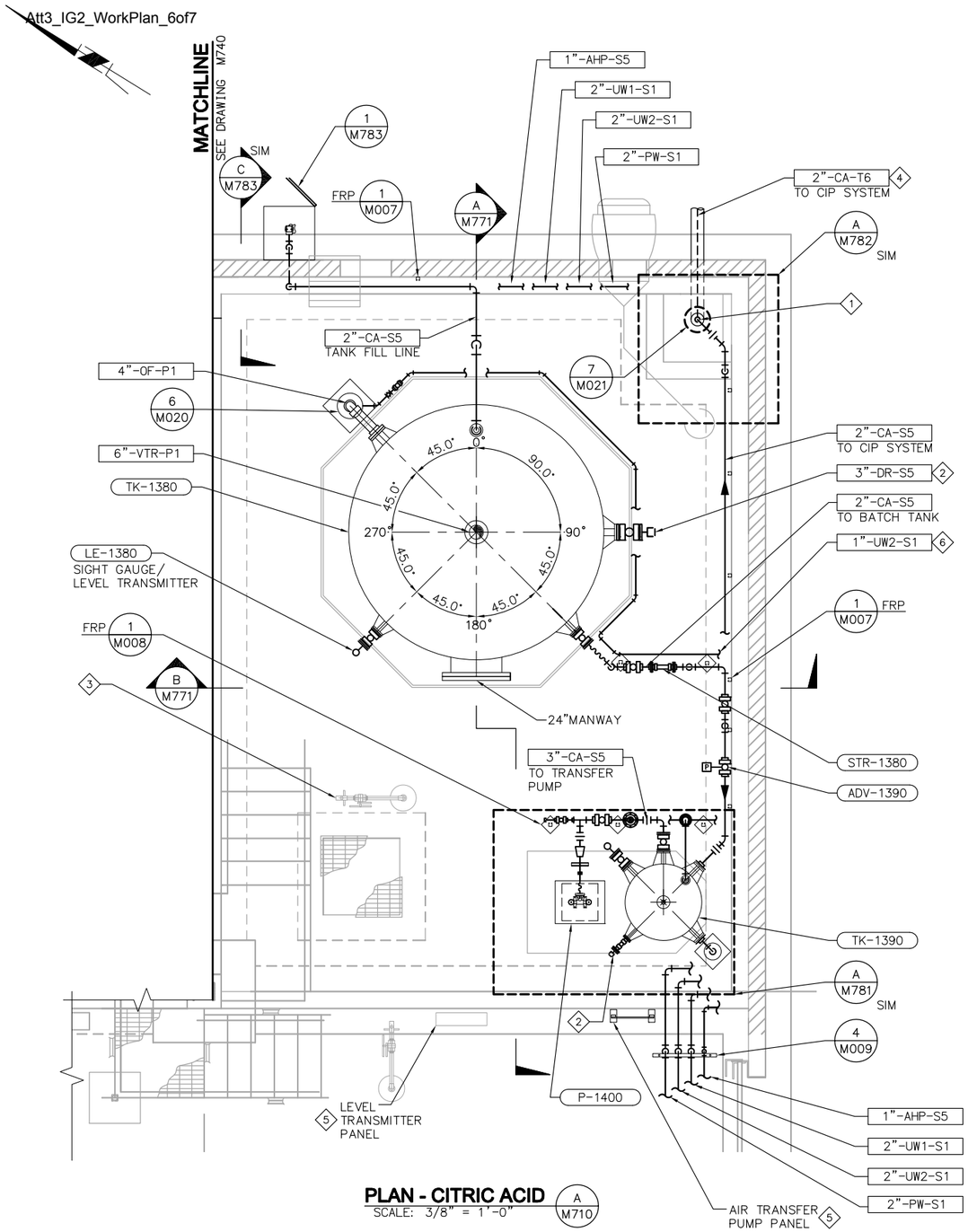

PLAN - CITRIC ACID (A / M710)
SCALE: 3/8" = 1'-0"

NOTES

1. REFER TO M001–MECHANICAL NOTES FOR ADDITIONAL INFORMATION AND REQUIREMENTS.
2. FOR CONTINUATION OF PIPING OUTSIDE OF STRUCTURES, SEE CIVIL DRAWINGS.
3. WHERE NO CONSTRUCTION DETAILS ARE SHOWN OR NOTED FOR ANY PART OF THE WORK, DETAILS SHALL BE THE SAME AS FOR OTHER SIMILAR WORK.

KEY NOTES

1. PVC TUBING IN 6–INCH PVC CARRIER PIPE.
2. INSTALL QUICK DISCONNECT ON ENDS OF PIPE FOR 3" HOSE CONNECTION.
3. SEE PLUMBING DRAWINGS FOR FLOOR DRAIN, SAFETY SHOWER, AND POTABLE WATER LOCATIONS AND PIPING.
4. CONCRETE ENCASE ALL PIPES UNDER STRUCTURES PER TYPICAL DETAIL 2/M012.
5. SEE ELECTRICAL/INSTRUMENTATION DRAWINGS FOR ADDITIONAL INFORMATION. COORDINATE INSTALLATION OF PANELS AS TO NOT BLOCK ACCESS TO DISCHARGE PIPING AND APPURTENANCES.
6. FIELD ROUTE 1"–UW2–S1 LINE TO TANK OVERFLOW VAPOR SEAL CONNECTION PER DETAIL 6/M020.

EQUIPMENT TAG NUMBERS ON THIS DRAWING ARE PRECEDED W/ 07-CA- UNLESS OTHERWISE LABELED

No.	DATE	REVISIONS	APPROVED

DESIGNED: DAH
DRAWN: RCM
CHECKED: VJR

RBF CONSULTING

carollo

IRVINE RANCH WATER DISTRICT

JIM MEYERHOFER	RCE NO. 48451	PROJECT MANAGER	DATE
CINDY MILLER	RCE NO. 58116	PROJECT MANAGER	DATE
PATRICIA UEMATSU	RCE NO. 36762	PRINCIPAL ENGINEER	DATE

IRVINE RANCH WATER DISTRICT
BAKER WATER TREATMENT PLANT
PROJECT NO. 11218

CHEMICAL BUILDING
CITRIC ACID
ENLARGED PLAN AND SECTION

DRAWING M770
SHEET 381 OF 632

FILENAME: 8127A10-6232-M770.dwg
LAST UPDATED: 01/05/2012 02:03 PM
LAST SAVED BY: trea

NOTES

1. REFER TO M001–MECHANICAL NOTES FOR ADDITIONAL INFORMATION AND REQUIREMENTS.
2. FOR CONTINUATION OF PIPING OUTSIDE OF STRUCTURES, SEE CIVIL DRAWINGS.
3. WHERE NO CONSTRUCTION DETAILS ARE SHOWN OR NOTED FOR ANY PART OF THE WORK, DETAILS SHALL BE THE SAME AS FOR OTHER SIMILAR WORK.

KEY NOTES

1. COVER VENT PIPE ENDS W/NO. 24 MESH, 316 SST SCREEN SECURED IN PLACE WITH BOLTED RETAINER RING.
2. INSTALL ROOF PENETRATIONS PER ARCHITECTURAL DRAWINGS.
3. ROUTE OVERHEAD PIPING TO AVOID CONFLICTS WITH ROOF TRUSSES.
4. FIELD ROUTE AND TERMINATE 1"–UW2–S1 LINE INSIDE CONTAINMENT AREA WITH ISOLATION BALL VALVE, ANTI–SIPHON VALVE, AND 1" QUICK–DISCONNECT THAT IS ACCESSIBLE TO FLUSHING CONNECTIONS IN PIPING.
5. FIELD ROUTE 1"–UW2–S1 LINE TO TANK OVERFLOW VAPOR SEAL CONNECTION PER DETAIL 6/M020.
6. PAINT VENT PIPING EXPOSED TO SUNLIGHT PER SPECIFICATION 09900.

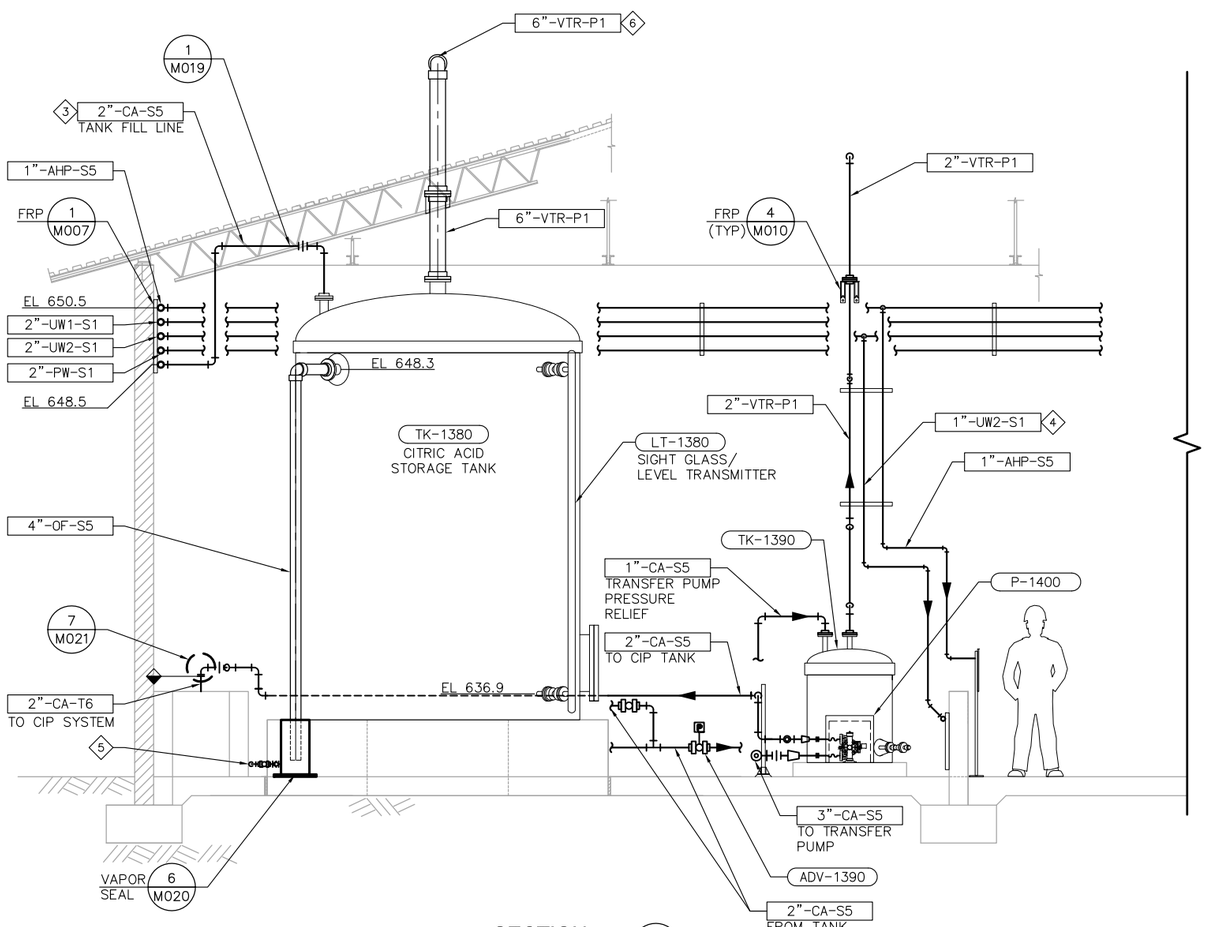

SECTION A M770
SCALE: 3/8" = 1'-0"

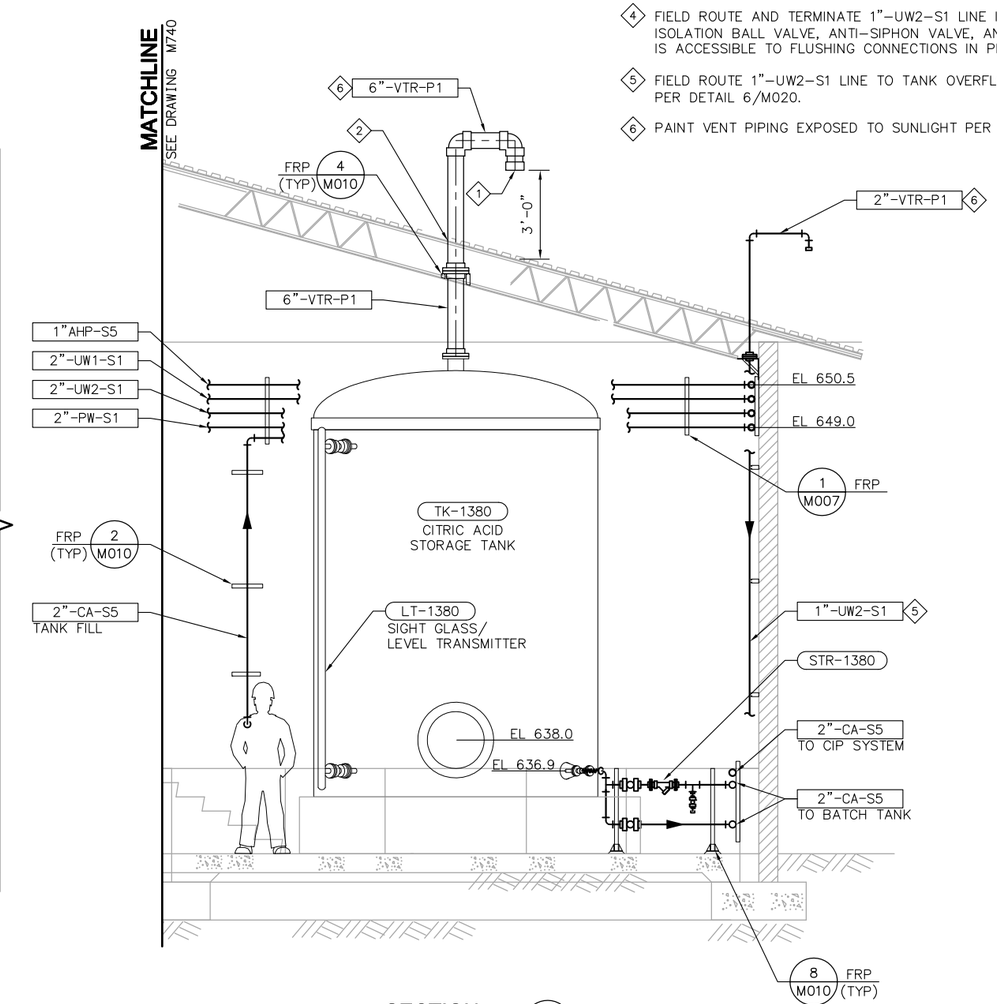

SECTION B M770
SCALE: 3/8" = 1'-0"

EQUIPMENT TAG NUMBERS ON THIS DRAWING ARE PRECEDED W/ 07-CA- UNLESS OTHERWISE LABELED

No.	DATE	REVISIONS	APPROVED

DESIGNED: DAH
DRAWN: RCM
CHECKED: VJR

RBF CONSULTING

carollo

IRVINE RANCH WATER DISTRICT

JIM MEYERHOFER	RCE NO. 48451	PROJECT MANAGER	DATE
CINDY MILLER	RCE NO. 58116	PROJECT MANAGER	DATE
PATRICIA UEMATSU	RCE NO. 36762	PRINCIPAL ENGINEER	DATE

IRVINE RANCH WATER DISTRICT
BAKER WATER TREATMENT PLANT
PROJECT NO. 11218

CHEMICAL BUILDING CITRIC ACID SECTIONS

DRAWING M771

SHEET 382 OF 632

FILENAME: 8127A10-6232-M771.dwg
LAST UPDATED: 01/05/2012 11:02 AM
LAST SAVED BY: tmg

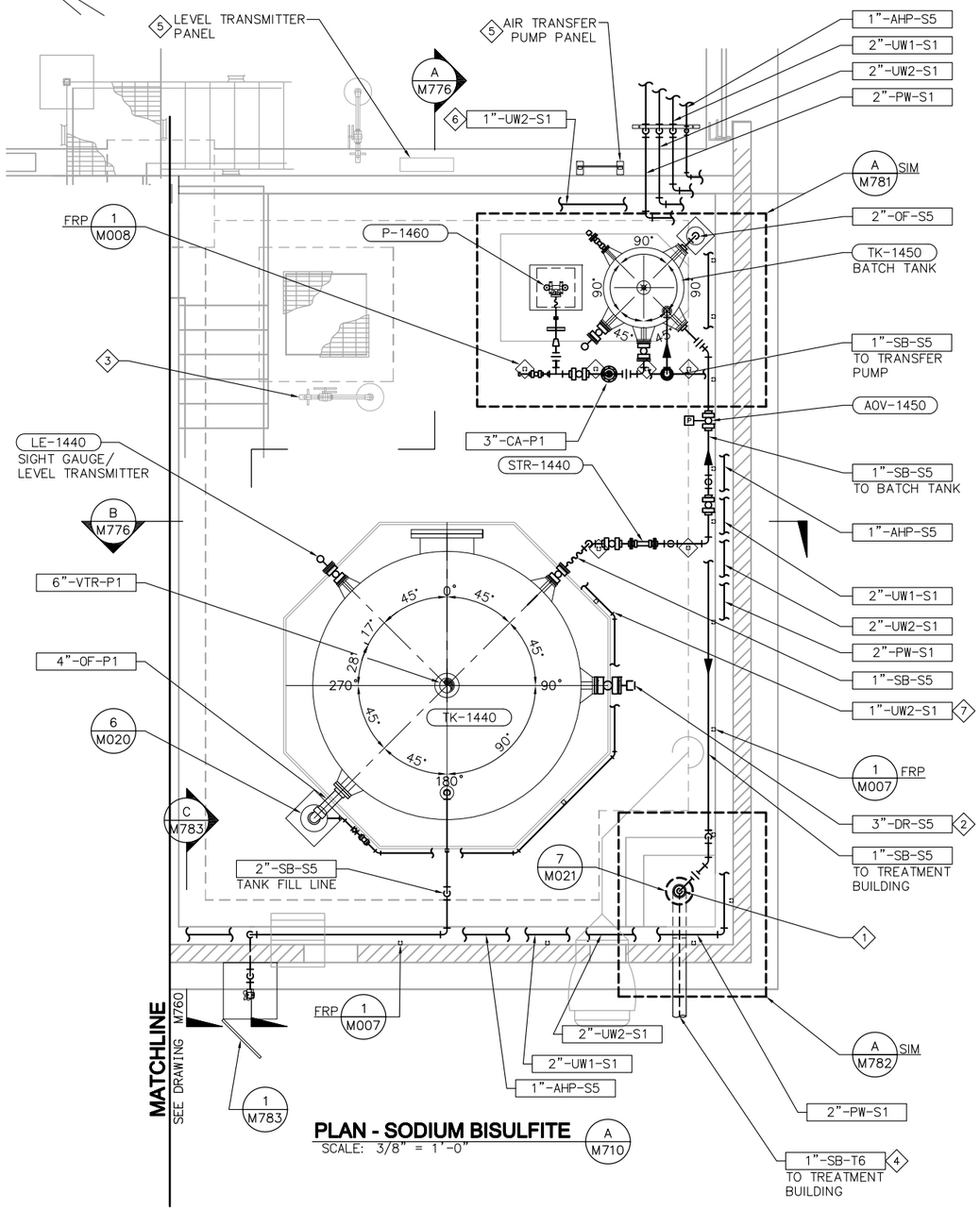

NOTES

1. REFER TO M001–MECHANICAL NOTES FOR ADDITIONAL INFORMATION AND REQUIREMENTS.
2. FOR CONTINUATION OF PIPING OUTSIDE OF STRUCTURES, SEE CIVIL DRAWINGS.
3. WHERE NO CONSTRUCTION DETAILS ARE SHOWN OR NOTED FOR ANY PART OF THE WORK, DETAILS SHALL BE THE SAME AS FOR OTHER SIMILAR WORK.

KEY NOTES

1. PVC TUBING IN 4–INCH PVC CARRIER PIPE.
2. INSTALL QUICK DISCONNECT ON ENDS OF PIPE FOR 3" HOSE CONNECTION.
3. SEE PLUMBING DRAWINGS FOR FLOOR DRAIN, SAFETY SHOWER, AND POTABLE WATER LOCATIONS AND PIPING.
4. CONCRETE ENCASE ALL PIPES UNDER STRUCTURES PER TYPICAL DETAIL 2/M012.
5. SEE ELECTRICAL/INSTRUMENTATION DRAWINGS FOR ADDITIONAL INFORMATION. COORDINATE INSTALLATION OF PANELS AS TO NOT BLOCK ACCESS TO DISCHARGE PIPING AND APPURTENANCES.
6. FIELD ROUTE AND TERMINATE 1"–UW2–S1 LINE INSIDE CONTAINMENT AREA WITH ISOLATION BALL VALVE, ANTI–SIPHON VALVE, AND 1" QUICK–DISCONNECT THAT IS ACCESSIBLE TO FLUSHING CONNECTIONS IN PIPING.
7. FIELD ROUTE 1"–UW2–S1 LINE TO TANK OVERFLOW VAPOR SEAL CONNECTION PER DETAIL 6/M020.

EQUIPMENT TAG NUMBERS ON THIS DRAWING ARE PRECEDED W/ 07-SB- UNLESS OTHERWISE LABELED

No.	DATE	REVISIONS	APPROVED

DESIGNED: DAH
DRAWN: RCM
CHECKED: VJR

RBF CONSULTING

carollo

IRVINE RANCH WATER DISTRICT

JIM MEYERHOFER	RCE NO. 48451	PROJECT MANAGER	DATE
CINDY MILLER	RCE NO. 58116	PROJECT MANAGER	DATE
PATRICIA UEMATSU	RCE NO. 36762	PRINCIPAL ENGINEER	DATE

IRVINE RANCH WATER DISTRICT
BAKER WATER TREATMENT PLANT
PROJECT NO. 11218

CHEMICAL BUILDING
SODIUM BISULFITE
ENLARGED PLAN AND SECTION

DRAWING M775

SHEET 383 OF 632

FILENAME: 8127A10-6232-M775.dwg
LAST UPDATED: 01/05/2012 02:04 PM
LAST SAVED BY: treo

NOTES

1. REFER TO M001–MECHANICAL NOTES FOR ADDITIONAL INFORMATION AND REQUIREMENTS.
2. FOR CONTINUATION OF PIPING OUTSIDE OF STRUCTURES, SEE CIVIL DRAWINGS.
3. WHERE NO CONSTRUCTION DETAILS ARE SHOWN OR NOTED FOR ANY PART OF THE WORK, DETAILS SHALL BE THE SAME AS FOR OTHER SIMILAR WORK.

KEY NOTES

SOC WMA

1. COVER VENT PIPE ENDS W/NO. 24 MESH, 316 SST SCREEN SECURED IN PLACE WITH BOLTED RETAINER RING.
2. INSTALL ROOF PENETRATIONS PER ARCHITECTURAL DRAWINGS.
3. ROUTE OVERHEAD PIPING TO AVOID CONFLICTS WITH ROOF TRUSSES.
4. SEE ELECTRICAL/INSTRUMENTATION DRAWINGS FOR ADDITIONAL INFORMATION. COORDINATE INSTALLATION OF PANELS AS TO NOT BLOCK ACCESS TO DISCHARGE PIPING AND APPURTENANCES.
5. FIELD ROUTE AND TERMINATE 1"–UW2–S1 LINE INSIDE CONTAINMENT AREA WITH ISOLATION BALL VALVE, ANTI–SIPHON VALVE, AND 1" QUICK DISCONNECT THAT IS ACCESSIBLE TO FLUSHING CONNECTIONS IN PIPING.
6. FIELD ROUTE 1"–UW2–S1 LINE TO TANK OVERFLOW VAPOR SEAL CONNECTION PER DETAIL 6/M020.
7. PAINT VENT PIPING EXPOSED TO SUNLIGHT PER SPECIFICATION 09900.

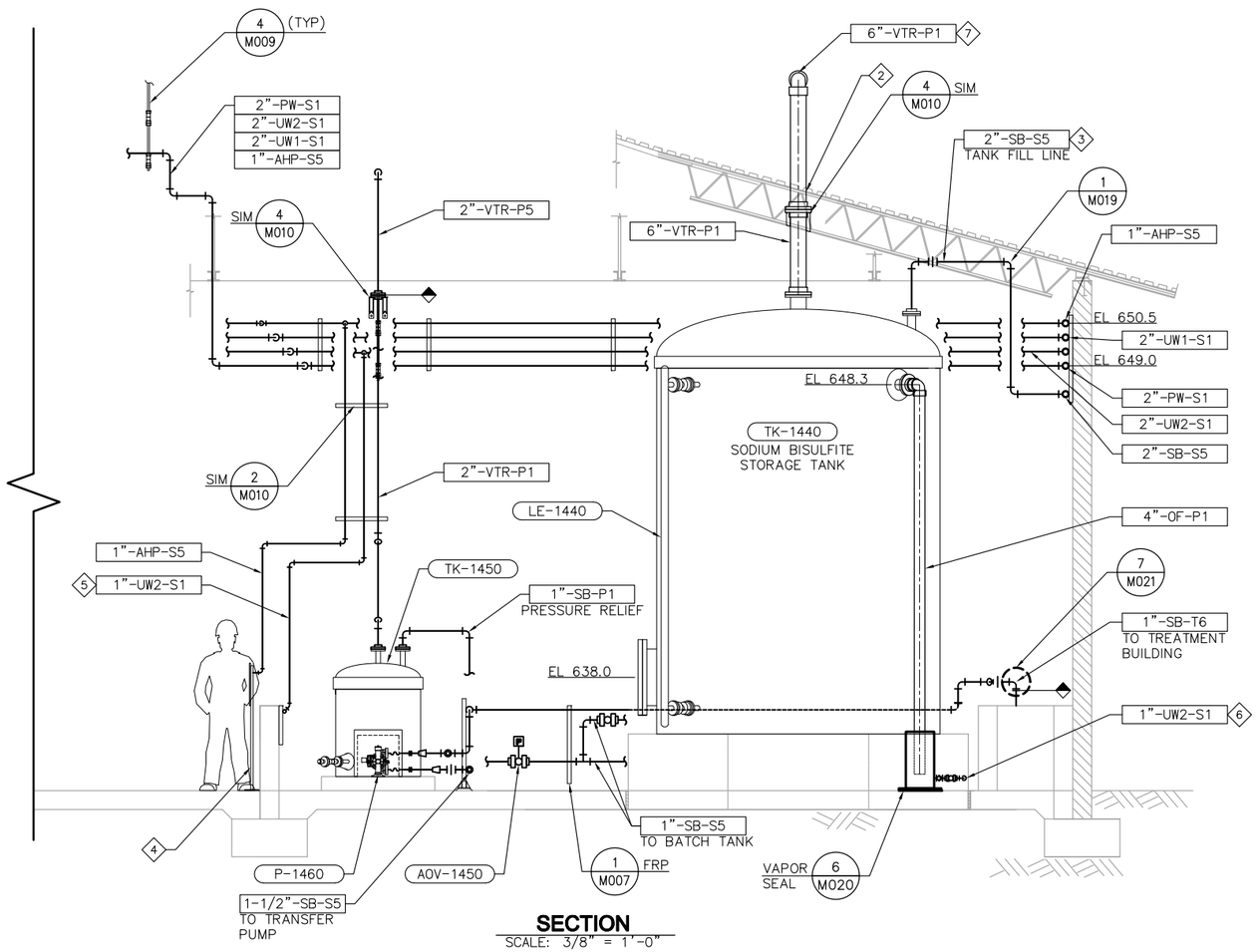

SECTION
SCALE: 3/8" = 1'-0"

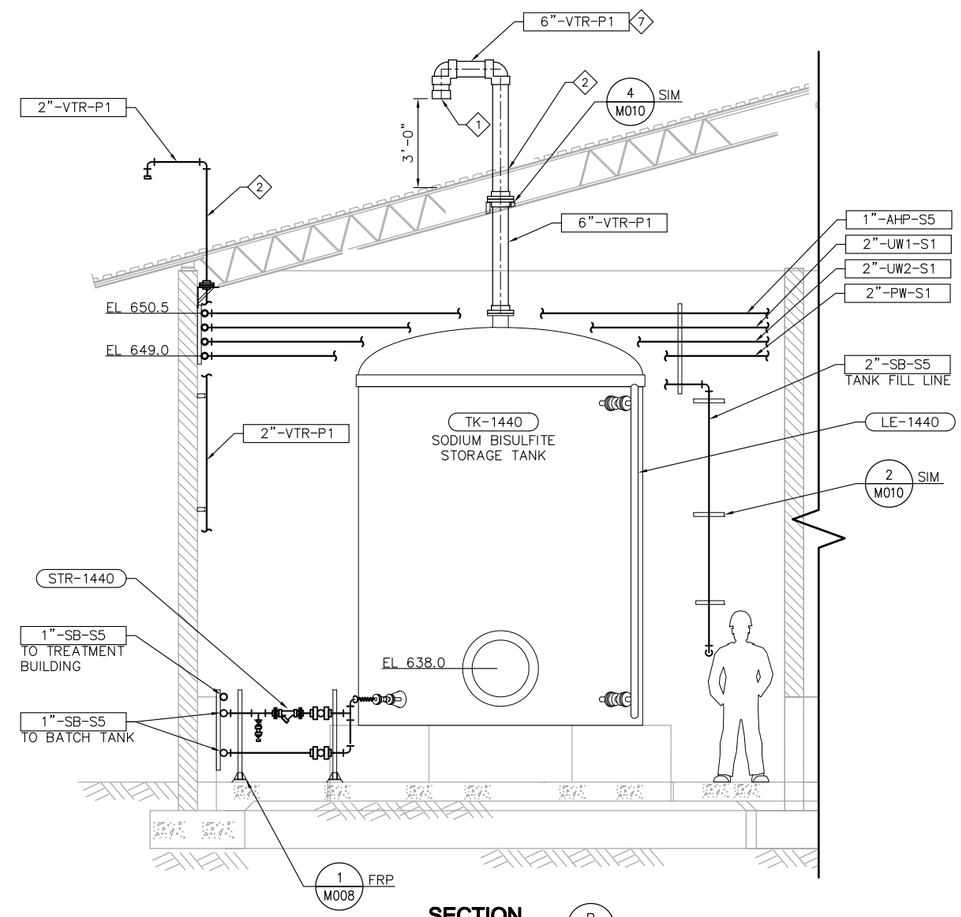

SECTION
SCALE: 3/8" = 1'-0" B M775

EQUIPMENT TAG NUMBERS ON THIS DRAWING ARE PRECEDED W/ 07-SB- UNLESS OTHERWISE LABELED

No.	DATE	REVISIONS	APPROVED

DESIGNED: DAH
DRAWN: RCM
CHECKED: VJR

RBF CONSULTING

carollo

IRVINE RANCH WATER DISTRICT

JIM MEYERHOFER	RCE NO. 48451	PROJECT MANAGER	DATE
CINDY MILLER	RCE NO. 58116	PROJECT MANAGER	DATE
PATRICIA UEMATSU	RCE NO. 36762	PRINCIPAL ENGINEER	DATE

IRVINE RANCH WATER DISTRICT
BAKER WATER TREATMENT PLANT
PROJECT NO. 11218

CHEMICAL BUILDING SODIUM BISULFITE SECTIONS

DRAWING M776
SHEET 384 OF 632

FILENAME: 8127A10-6232-M776.dwg
LAST UPDATED: 01/05/2012 11:04 AM
LAST SAVED BY: trea

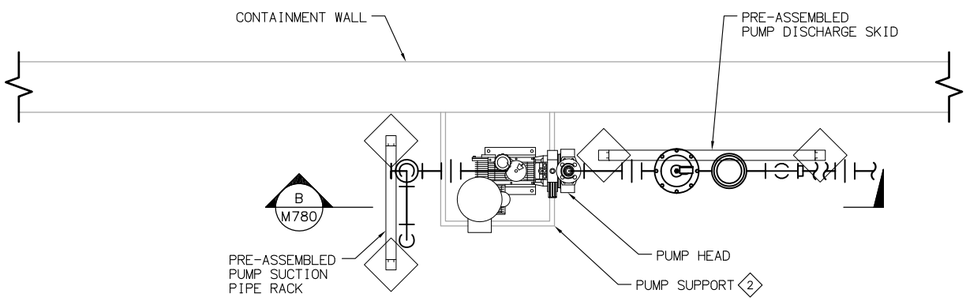

PLAN
SCALE: 1" = 1'-0" (A / VAR)

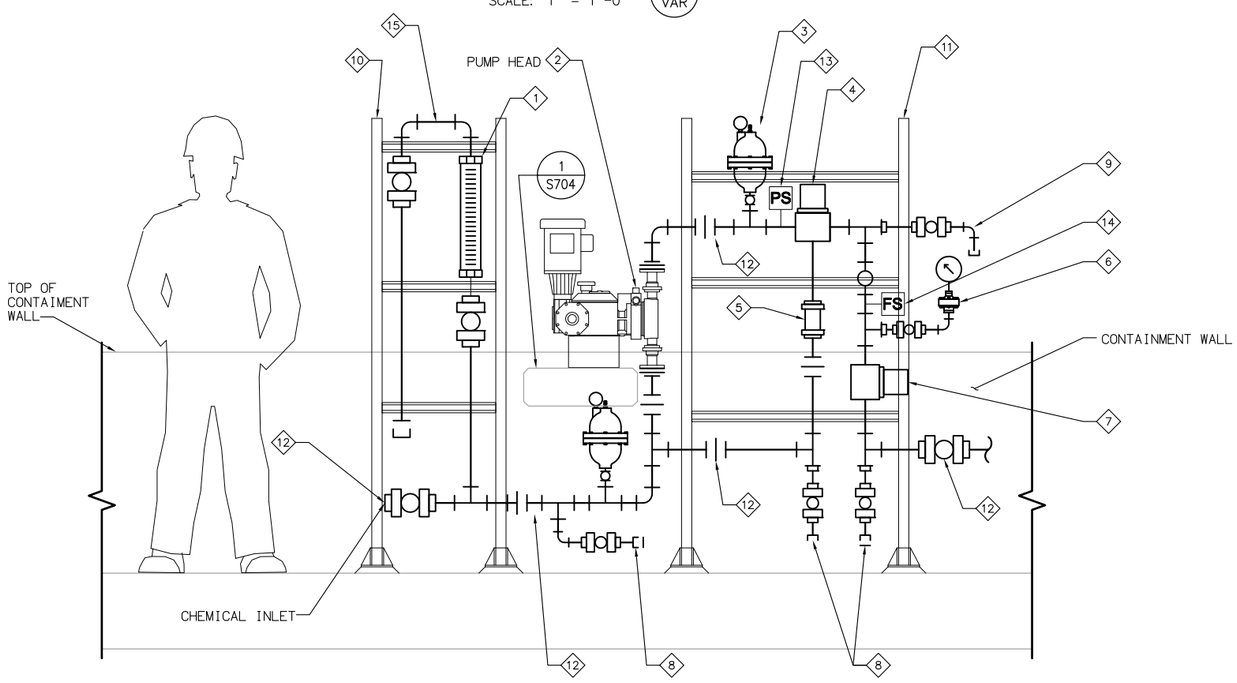

SECTION
SCALE: 1" = 1'-0" (B / –)

NOTES

1. PIPING AND ACCESSORIES IN CONTAINMENT AREA TO BE MOUNTED ON NON-METALLIC PREFORMED CHANNEL PIPE SUPPORTS PER SPECIFICATIONS SECTION 15063.
2. ALL BALL VALVES ON SODIUM HYPOCHLORITE SYSTEM AND AQUEOUS AMMONIA SYSTEM SHALL HAVE VENTED BALLS.
3. ALL PUMPS, CONTROLS AND ACCESSORIES SHALL BE MOUNTED TO ALLOW COMPLETE OPERATION FROM THE OPERATING FLOOR OUTSIDE OF CONTAINMENT AREA.
4. METERING PUMPS AND ACCESSORIES SHALL BE SUPPLIED AS A COMPLETE SYSTEM PER SPECIFICATION SECTION 11242.
5. PROVIDE ISOLATION VALVES FOR CHEMICAL METERING SKIDS PER THE SCHEDULE BELOW.

KEY NOTES

1. CALIBRATION COLUMN
2. PUMP HEAD WITH FLEXIBLE CONNECTIONS AND ADAPTERS TO PIPING FOR SUCTION AND DISCHARGE CONNECTIONS. PUMP TO BE FASTENED TO PUMP SUPPORT.
3. PULSATION DAMPENER WITH PRESSURE GAUGE (TYP OF 2)
4. ANGLE PRESSURE RELIEF VALVE
5. RELIEF BYPASS WITH SIGHT GAUGE
6. PRESSURE GAUGE WITH DIAPHRAGM SEAL
7. BACK PRESSURE VALVE
8. DRAIN / FLUSHING CONNECTIONS (TYP OF 4)
9. CHEMICAL SAMPLE POINT
10. PRE-ASSEMBLED PUMP SUCTION SKID AND ACCESSORIES. REFER TO SECTION 11242.
11. PRE-ASSEMBLED PUMP DISCHARGE SKID AND ACCESSORIES. REFER TO SECTION 11242.
12. TERMINAL CONNECTION POINTS FOR PRE-ASSEMBLED METERING PUMP SKIDS
13. HIGH PRESSURE SWITCH
14. FLOW SWITCH
15. CALIBRATION COLUMN VENT. VALVES NORMALLY CLOSED. ROUTE AMMONIA SYSTEM CALIBRATION COLUMN VENTS TO AMMONIA SCRUBBER VENT.

ISOLATION VALVE TYPE BY CHEMICAL SERVICE		
CHEMICAL SERVICE	ISOLATION VALVE TYPE	SPECIFICATION
CAUSTIC SODA	PLUG VALVE	15100
AQUA AMMONIA	VENTED BALL VALVE	15111
SODIUM HYPOCHLORITE	VENTED BALL VALVE	15111
PRIMARY COAGULANT	BALL VALVE	15111

FILENAME: 8127A10-6232-M780.dwg
LAST UPDATED: 01/05/2012 11:04 AM
LAST SAVED BY: trea

No.	DATE	REVISIONS	APPROVED

DESIGNED: DAH
DRAWN: RCM
CHECKED: VJR

RBF CONSULTING

carollo

IRVINE RANCH WATER DISTRICT

JIM MEYERHOFER	RCE NO. 48451	PROJECT MANAGER	DATE
CINDY MILLER	RCE NO. 58116	PROJECT MANAGER	DATE
PATRICIA UEMATSU	RCE NO. 36762	PRINCIPAL ENGINEER	DATE

IRVINE RANCH WATER DISTRICT
BAKER WATER TREATMENT PLANT
PROJECT NO. 11218

CHEMICAL BUILDING CHEMICAL METERING PUMP TYPICAL INSTALLATION

DRAWING
M780
SHEET
385 OF 632

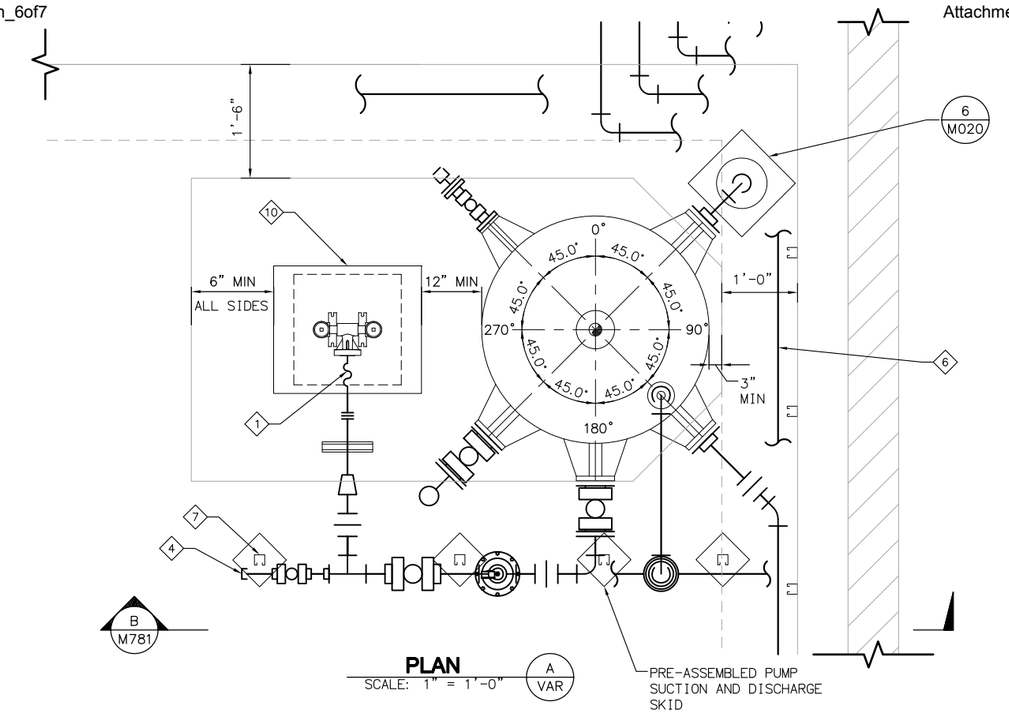

PLAN
SCALE: 1" = 1'-0"
A
VAR

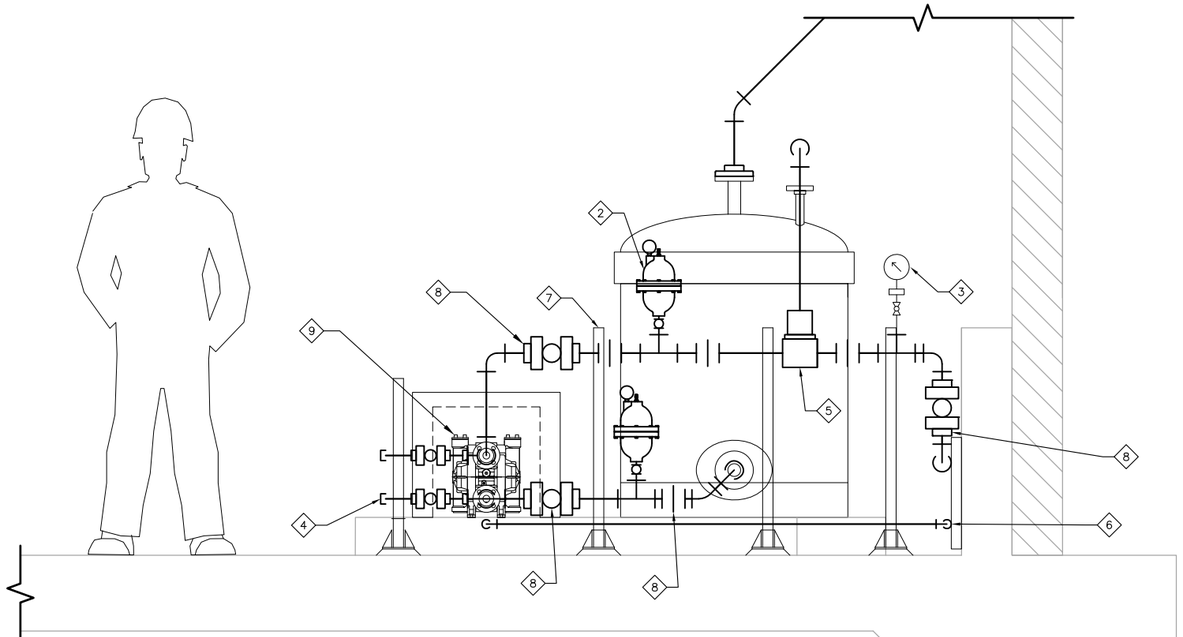

TYPICAL AIR OPERATED DIAPHRAGM TRANSFER PUMP
1" = 1'-0"
B
–

NOTES

1. AIR OPERATED DIAPHRAGM PUMP AND ACCESSORIES TO BE SUPPLIED AS COMPLETE SYSTEM PER SPECIFICATIONS SECTION 11312W.
2. PIPING AND ACCESSORIES IN CONTAINMENT AREA TO BE MOUNTED ON NON-METALLIC PREFORMED CHANNEL PIPE SUPPORTS PER SPECIFICATIONS SECTION 15063.
3. ALL BALL VALVES ON SODIUM HYPOCHLORITE SYSTEM TO HAVE DRILLED VENTED BALLS.
4. ALL PUMPS, CONTROLS AND ACCESSORIES SHALL BE MOUNTED TO ALLOW COMPLETE OPERATION FROM OUTSIDE OF CONTAINMENT AREA.
5. PROVIDE ISOLATION VALVES FOR CHEMICAL TRANSFER RACKS PER THE SCHEDULE BELOW.

KEY NOTES

1. FLEXIBLE CONNECTIONS AND ADAPTERS TO PIPING FOR SUCTION AND DISCHARGE CONNECTIONS
2. PULSATION DAMPENER WITH PRESSURE GAUGE (TYP OF2)
3. PRESSURE GAUGE WITH DIAPHRAGM SEAL
4. DRAIN / FLUSHING CONNECTIONS (TYP OF 2)
5. PRESSURE RELIEF VALVE
6. 1/2" TRANSFER PUMP AIR SUPPLY FROM PRE-FABRICATED AIR SUPPLY PANEL. SEE DETAIL D/M782
7. PRE-ASSEMBLED SUCTION AND DISCHARGE PIPING SKID
8. TERMINAL CONNECTION POINTS FOR PRE-ASSEMBLED SUCTION AND DISCHARGE PIPING SKID INCLUDE ISOLATION VALVE
9. AIR OPERATED DIAPHRAGM PUMP. REFER TO SECTION 11312W
10. SOUND ATTENUATING PUMP ENCLOSURE. REFER TO SECTION 11312W

ISOLATION VALVE TYPE BY CHEMICAL SERVICE		
CHEMICAL SERVICE	ISOLATION VALVE TYPE	SPECIFICATION
SODIUM BISULFITE	BALL VALVE	15111
CITRIC ACID	BALL VALVE	15111
SODIUM HYPOCHLORITE	VENTED BALL VALVE	15111
CAUSTIC SODA	PLUG VALVE	15100

FILENAME:8127A10-6232-M781.dwg
LAST UPDATED: 01/05/2012 11:05 AM
LAST SAVED BY: trea

No.	DATE	REVISIONS	APPROVED

DESIGNED: DAH
DRAWN: RCM
CHECKED: VJR

RBF CONSULTING
carollo
IRVINE RANCH WATER DISTRICT

JIM MEYERHOFER	RCE NO. 48451	PROJECT MANAGER	DATE
CINDY MILLER	RCE NO. 58116	PROJECT MANAGER	DATE
PATRICIA UEMATSU	RCE NO. 36762	PRINCIPAL ENGINEER	DATE

IRVINE RANCH WATER DISTRICT
BAKER WATER TREATMENT PLANT
PROJECT NO. 11218

CHEMICAL BUILDING
TRANSFER PUMP
TYPICAL INSTALLATION

DRAWING
M781
SHEET
386 OF 632

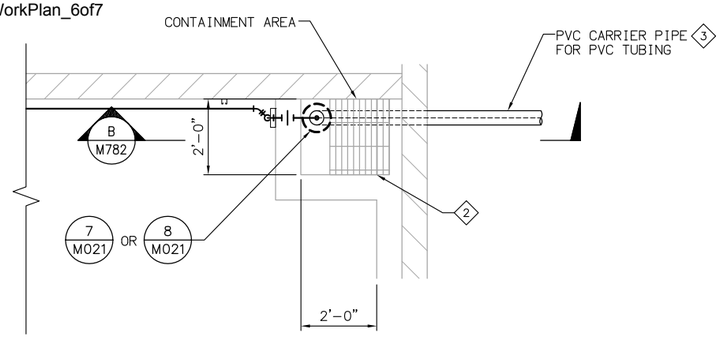

PLAN
SCALE: 1/2" = 1'-0" (A M770)

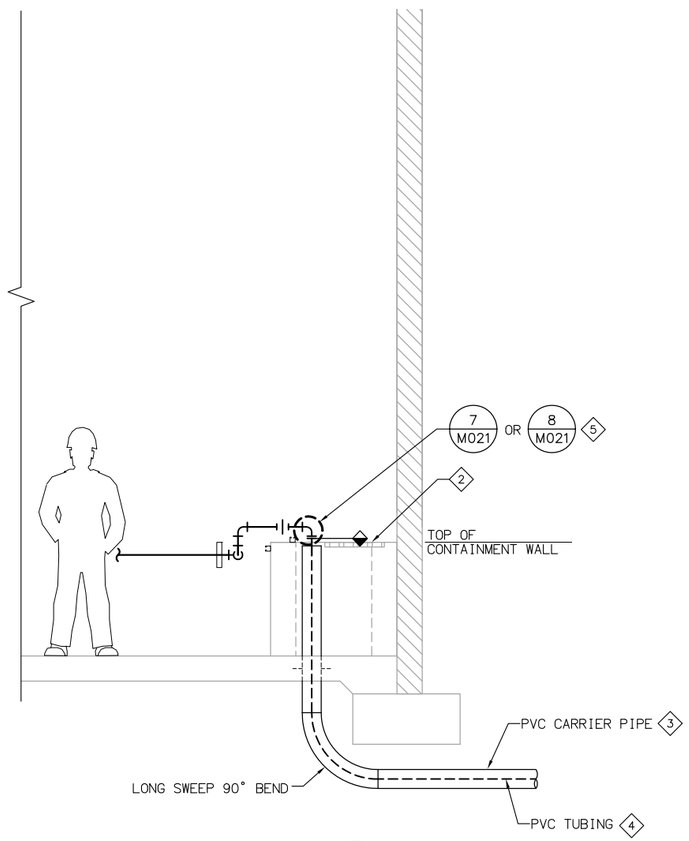

SECTION
SCALE: 1/2" = 1'-0" (B M782)

NOTES

1. REFER TO M-001 MECHANICAL NOTES FOR ADDITIONAL INFORMATION AND REQUIREMENTS.
2. FOR CONTINUATION OF PIPING OUTSIDE OF STRUCTURES, SEE CIVIL DRAWINGS.
3. WHERE NO CONSTRUCTION DETAILS ARE SHOWN OR NOTED FOR ANY PART OF THE WORK, DETAILS SHALL BE THE SAME AS FOR OTHER SIMILAR WORK.

KEY NOTES

1. SEE INSTRUMENTATION DRAWING I019 FOR LOCAL CONTROL PANEL ELEVATION DRAWING. TYPICAL OF LCP-1210, LCP-1280, LCP-1400, AND LCP-1460.
2. FRP GRATING. REFER TO SECTION 06611.
3. CARRIER PIPE SIZE FOR TUBING DIAMETER 1-INCH OR LESS SHALL BE 4-INCH. CARRIER PIPE SIZE FOR TUBING SIZES GREATER THAN 1-INCH AND UP TO 2-INCH SHALL BE 6-INCH NOMINAL DIAMETER.
4. REFER TO CHEMICAL FEED ROOM MECHANICAL DRAWINGS FOR SPECIFIC CHEMICAL TUBING SIZES.
5. SELECT DETAIL BASED ON PIPING MATERIAL.

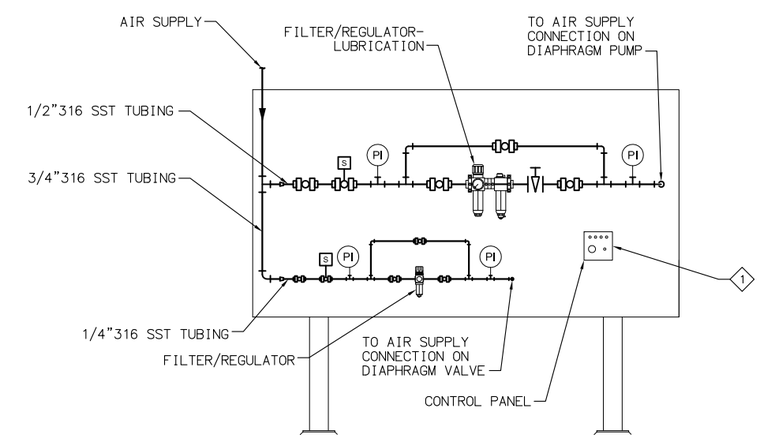

DETAIL - AIR SUPPLY PANEL
SCALE: 3/4" = 1'-0" (D VAR)

FILENAME: 8127A10-6232-M782.dwg
LAST UPDATED: 01/31/2012 11:16 AM
LAST SAVED BY: trea

No.	DATE	REVISIONS	APPROVED

DESIGNED: DAH
DRAWN: RCM
CHECKED: VJR

RBF CONSULTING
carollo
IRVINE RANCH WATER DISTRICT

JIM MEYERHOFER	RCE NO. 48451	PROJECT MANAGER	DATE
CINDY MILLER	RCE NO. 58116	PROJECT MANAGER	DATE
PATRICIA UEMATSU	RCE NO. 36762	PRINCIPAL ENGINEER	DATE

IRVINE RANCH WATER DISTRICT
BAKER WATER TREATMENT PLANT
PROJECT NO. 11218

CHEMICAL BUILDING MISCELLANEOUS DETAILS I

DRAWING
M782
SHEET
387 OF 632

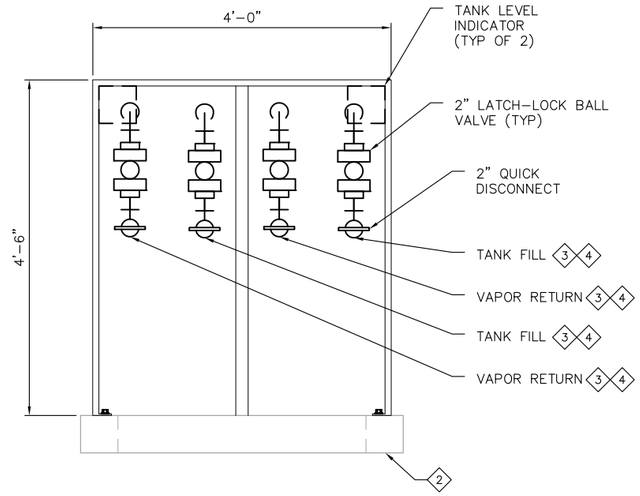

AQUEOUS AMMONIA CHEMICAL FILL STATION (4 / –)
SCALE: NTS

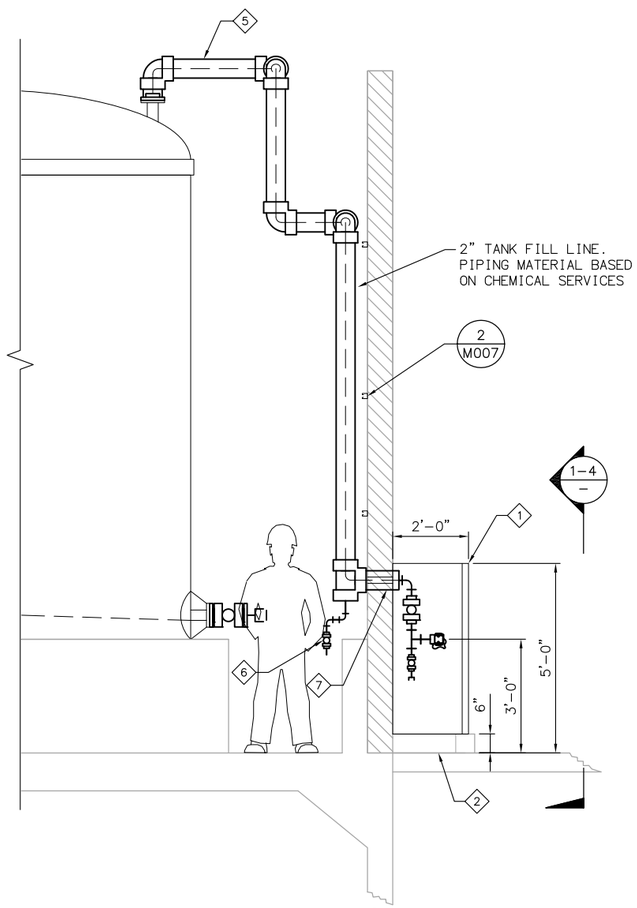

SECTION (C / VAR)
SCALE: 1/2" = 1'-0"

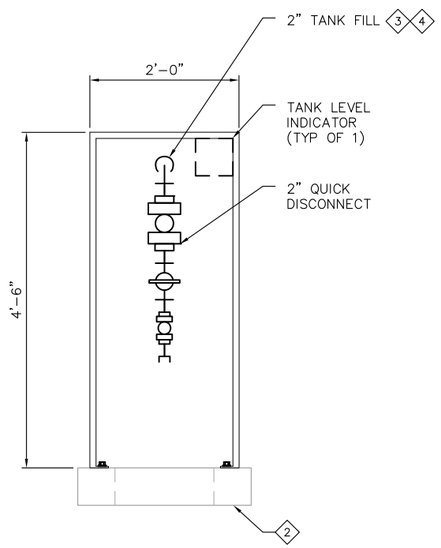

SINGLE TANK CHEMICAL FILL STATION (1 / –)
SCALE: NTS

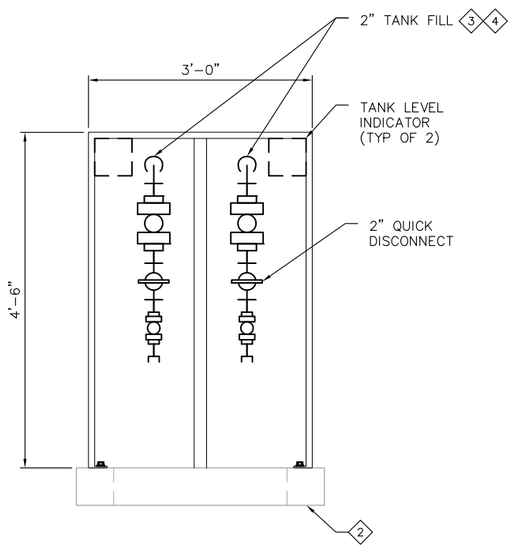

DUAL TANK CHEMICAL FILL STATION (2 / –)
SCALE: NTS

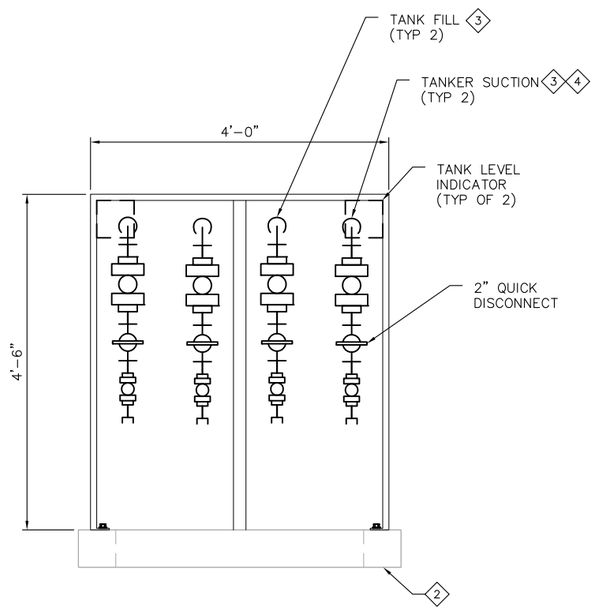

SODIUM HYPOCHLORITE CHEMICAL FILL STATION (3 / –)
SCALE: NTS

NOTES

1. REFER TO M001-MECHANICAL NOTES FOR ADDITIONAL INFORMATION AND REQUIREMENTS.
2. FOR CONTINUATION OF PIPING OUTSIDE OF STRUCTURES, SEE CIVIL DRAWINGS.
3. WHERE NO CONSTRUCTION DETAILS ARE SHOWN OR NOTED FOR ANY PART OF THE WORK, DETAILS SHALL BE THE SAME AS FOR OTHER SIMILAR WORK.

KEY NOTES

1. PROVIDE 18-GAUGE 304 STAINLESS STEEL WELDED CUSTOM CABINET. CABINET SHALL INCLUDE FULL HEIGHT PIANO HINGED FRONT DOORS WITH FLUSH-MOUNTED STAINLESS STEEL LOCKING DOOR HANDLE. TOP, SIDES, AND FRONT SHALL BE SOLID PANELS. CABINET SHALL BE ANCHORED TO WALL AND FLOOR WITH OPEN BOTTOM AND OPENING IN BACK PANEL FOR PIPING. PROVIDE FRAME FOR MOUNTING LEVEL INDICATORS. MANUFACTURER SHALL BE SECURALL, LA PORTE, IN (OR EQUAL).
2. PROVIDE 6-INCH CHEMICAL CONTAINMENT CURB AT BASE OF FILL STATION CABINET.
3. SUPPORT PIPING WITHIN CABINET FROM PREFORMED CHANNEL. PERFORMED CHANNEL SHALL BE ANCHORED TO BUILDING STRUCTURE INDEPENDENTLY FROM CABINET.
4. CLEARLY LABEL PIPING WITHIN CABINET. PIPING LABELS SHALL INDICATE SERVICE (FILL, VAPOR RETURN, ETC.) AND ASSOCIATED TANK.
5. CHEMICALS WITH NON-METALLIC PIPING ONLY: DOUBLE CONTAIN CHEMICAL TANK FILL PIPING. REFER TO SECTION 15245.
6. PROVIDE 1-INCH VALVED DRAIN W/CLEAR SIGHT GLASS AT LOW POINT OF CONTAINMENT PIPING WITHIN BUILDING.
7. TERMINATE DOUBLE-CONTAINMENT WITH CHEMICAL FILL STATION.

FILENAME: 8127A10-6232-M783.dwg
LAST UPDATED: 01/31/2012 11:17 AM
LAST SAVED BY: trea

No.	DATE	REVISIONS	APPROVED

DESIGNED: DAH
DRAWN: RCM
CHECKED: VJR

RBF CONSULTING

carollo

IRVINE RANCH WATER DISTRICT

JIM MEYERHOFER	RCE NO. 48451	PROJECT MANAGER	DATE
CINDY MILLER	RCE NO. 58116	PROJECT MANAGER	DATE
PATRICIA UEMATSU	RCE NO. 36762	PRINCIPAL ENGINEER	DATE

IRVINE RANCH WATER DISTRICT
BAKER WATER TREATMENT PLANT
PROJECT NO. 11218

CHEMICAL BUILDING MISCELLANEOUS DETAILS II

DRAWING
M783
SHEET

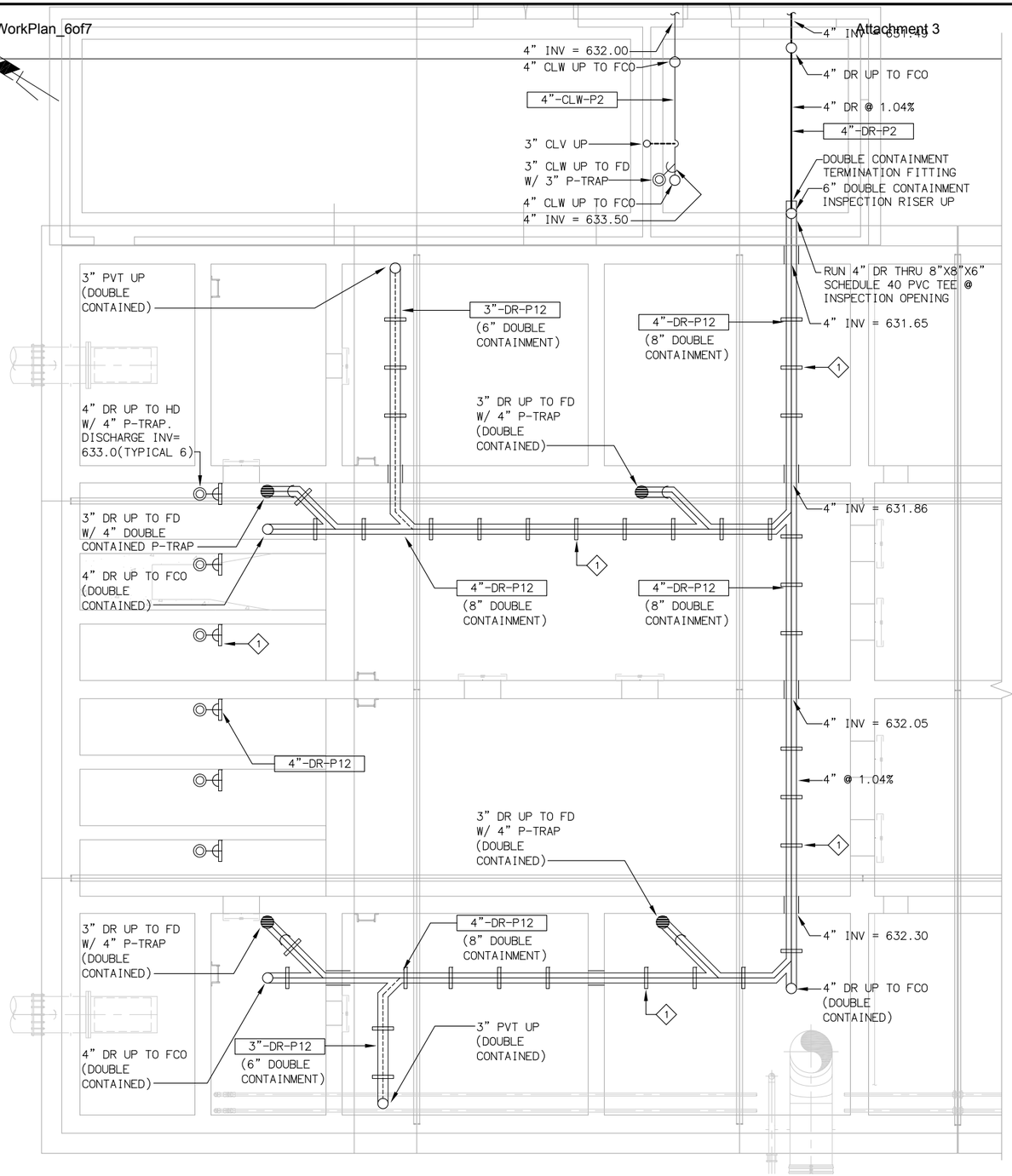

NOTES

SOC WMA

1. REFER TO GENERAL MECHANICAL NOTES FOR ADDITIONAL INFORMATION AND REQUIREMENTS.
2. FOR CONTINUATION OF PIPING OUTSIDE OF STRUCTURES, SEE CIVIL DRAWINGS.
3. ALL WASTE & VENT PIPING BELOW GRADE IN EARTH SHALL BE ENCASED IN REINFORCED CONRETE AS SHOWN ON MECHANICAL DETAIL DRAWING M012, DETAILS 1, 2, & 4.

KEY NOTES

1. HANG DOUBLE CONTAINED PIPING SYSTEM THRUOUT TANKS WITH TYPE 304 STAINLESS STEEL TRANSVERSE STYLE HANGER AS SHOWN ON MECHANICAL DETAIL DRAWING M-006, DETAIL 7. SPACE HANGERS @ 4'-0" ON CENTER.
2. REFER TO STRUCTURAL DRAWINGS FOR TRENCH DRAIN @ BOTTOM OF STAIRWAY & PIPING TO STORM WATER SUMP.
3. MOUNT DUPLEX CONTROL PANEL ON WALL ADJACENT SUMP.

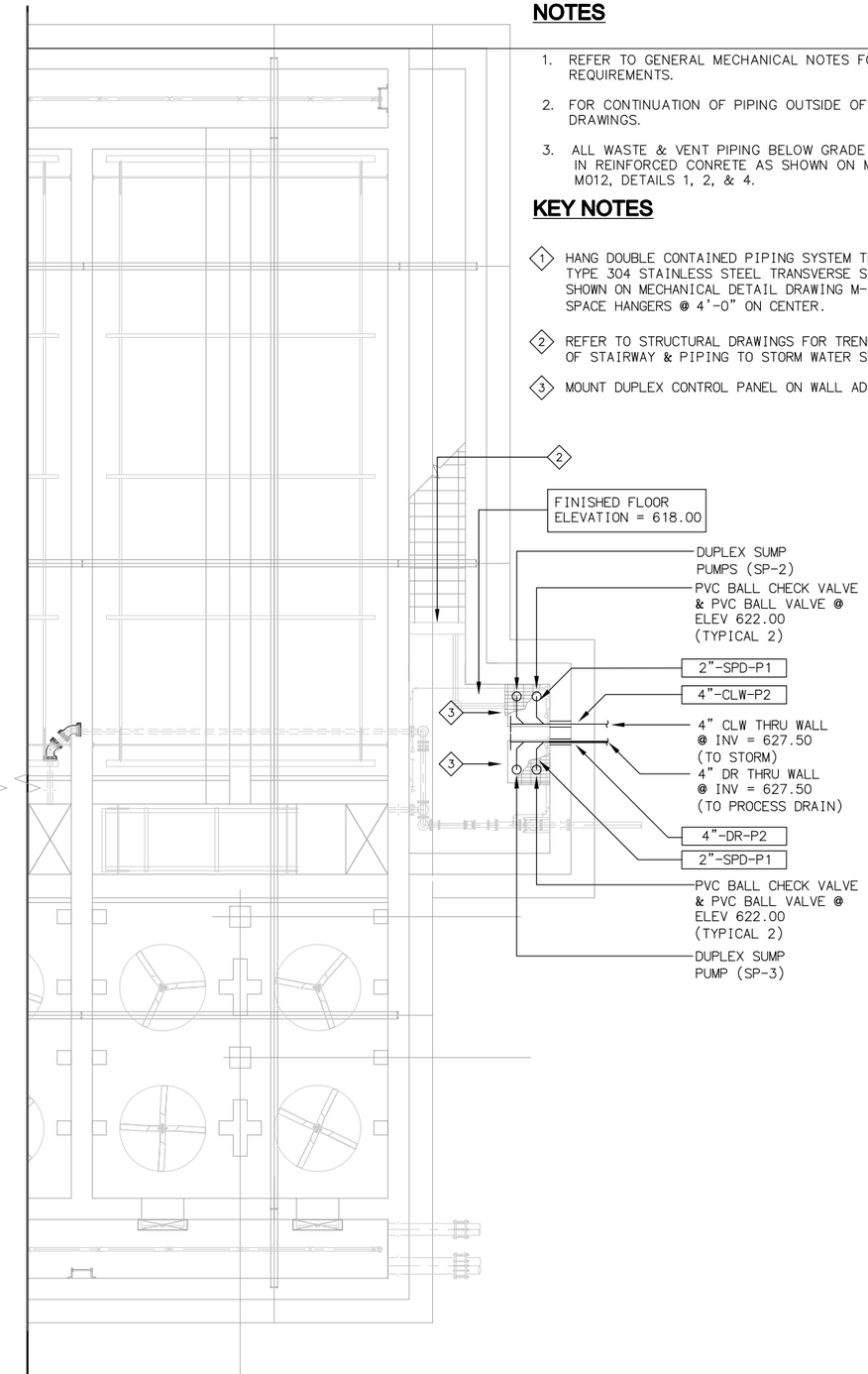

EQUIPMENT TAG NUMBERS ON THIS DRAWING ARE PRECEDED W/ **02-MFW-** UNLESS OTHERWISE LABELED

PLAN BELOW ELEV. 635.00

SCALE: 3/16" = 1'-0"

No.	DATE	REVISIONS	APPROVED

DESIGNED: MLS
DRAWN: MLS
CHECKED: TSD

RBF CONSULTING

carollo

IRVINE RANCH WATER DISTRICT

JIM MEYERHOFER	RCE NO. 48451	PROJECT MANAGER	DATE
CINDY MILLER	RCE NO. 58116	PROJECT MANAGER	DATE
PATRICIA UEMATSU	RCE NO. 36762	PRINCIPAL ENGINEER	DATE

IRVINE RANCH WATER DISTRICT
BAKER WATER TREATMENT PLANT
PROJECT NO. 11218

FOREBAY AND MF PUMP STATION FOUNDATION PLAN

DRAWING **P201**

SHEET **390** OF **632**

FILENAME:8127A10-6232-p201.dwg
LAST UPDATED: 01/25/2012 01:19 PM
LAST SAVED BY: treg

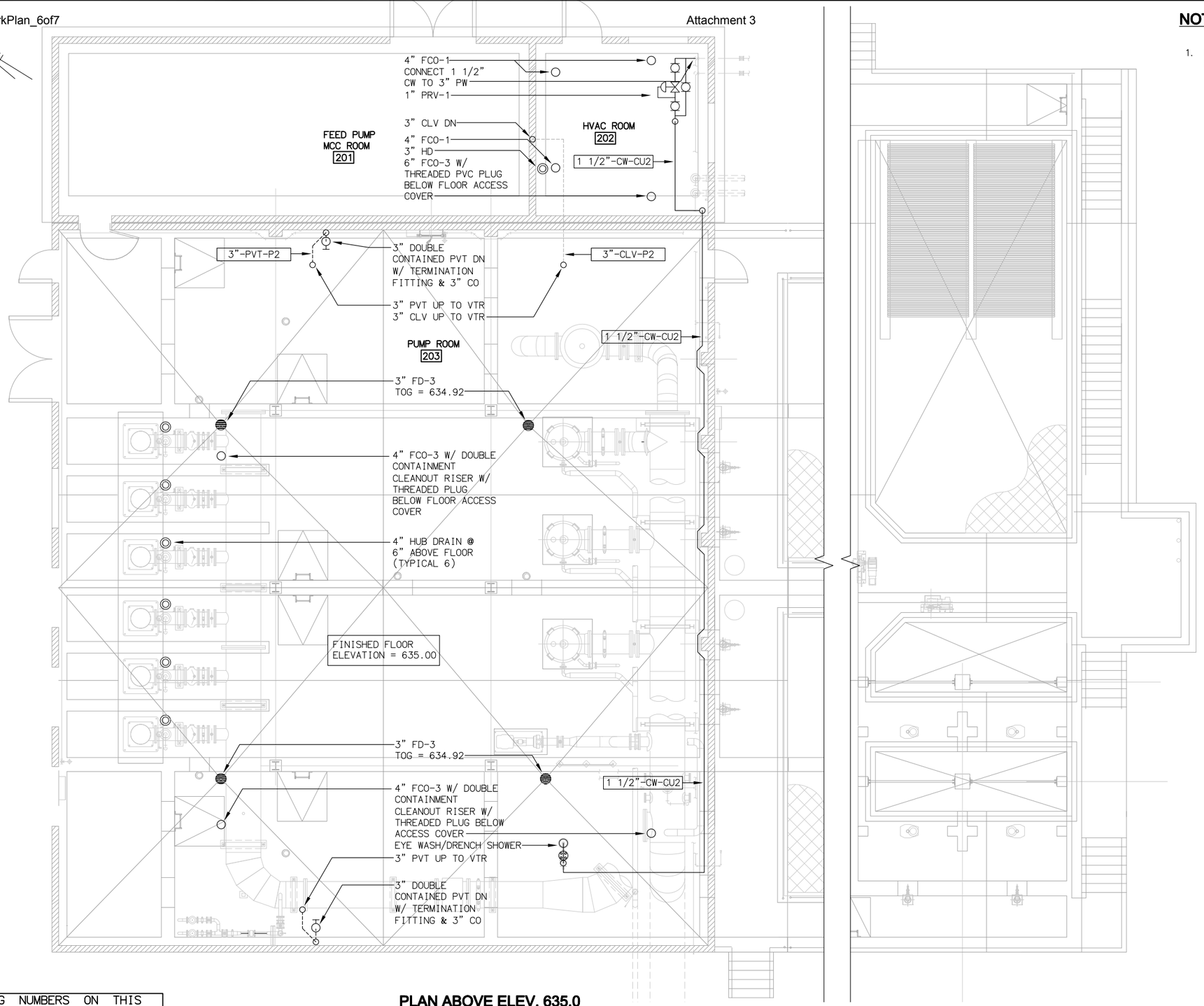

NOTES

1. REFER TO GENERAL MECHANICAL NOTES FOR ADDITIONAL INFORMATION AND REQUIREMENTS.

EQUIPMENT TAG NUMBERS ON THIS DRAWING ARE PRECEDED W/ **02-MFW-** UNLESS OTHERWISE LABELED

PLAN ABOVE ELEV. 635.0

SCALE: 3/16" = 1'-0"

No.	DATE	REVISIONS	APPROVED

DESIGNED: MLS
DRAWN: MLS
CHECKED: TSD

RBF CONSULTING

carollo

IRVINE RANCH WATER DISTRICT

JIM MEYERHOFER	RCE NO. 48451	PROJECT MANAGER	DATE
CINDY MILLER	RCE NO. 58116	PROJECT MANAGER	DATE
PATRICIA UEMATSU	RCE NO. 36762	PRINCIPAL ENGINEER	DATE

IRVINE RANCH WATER DISTRICT
BAKER WATER TREATMENT PLANT
PROJECT NO. 11218

FOREBAY AND MF PUMP STATION PLAN

DRAWING
P202
SHEET
391 OF 632

FILENAME: 8127A10-6232-P202.dwg
LAST UPDATED: 01/25/2012 11:07 AM
LAST SAVED BY: pkolorik

NOTES

1. REFER TO GENERAL MECHANICAL NOTES FOR ADDITIONAL INFORMATION AND REQUIREMENTS.
2. ALL WASTE & VENT PIPING BELOW GRADE IN EARTH SHALL BE ENCASED IN REINFORCED CONRETE AS SHOWN ON MECHANICAL DETAIL DRAWING M012, DETAILS 1, 2, & 4.

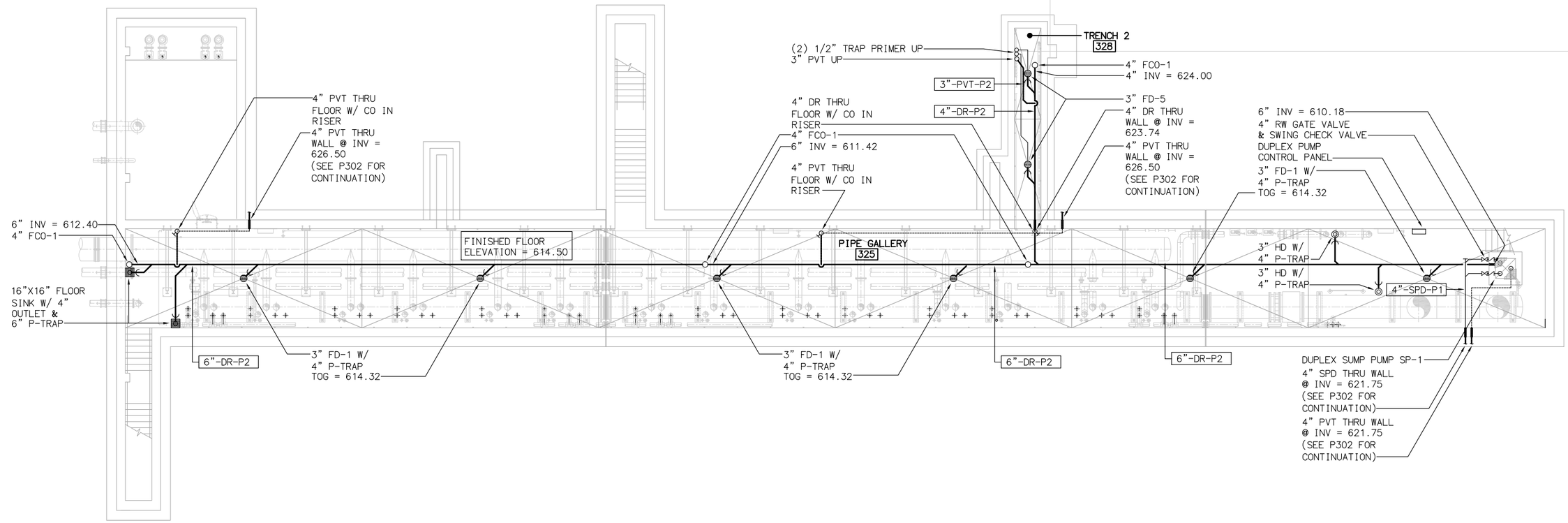

PLAN
PIPING MODIFICATIONS
SCALE: 1/8"= 1'-0"

EQUIPMENT TAG NUMBERS ON THIS DRAWING ARE PRECEDED W/ **01-RW-** UNLESS OTHERWISE LABELED

No.	DATE	REVISIONS	APPROVED

DESIGNED: MLS
DRAWN: MLS
CHECKED: TSD

RBF CONSULTING

carollo

IRVINE RANCH WATER DISTRICT

JIM MEYERHOFER	RCE NO. 48451	PROJECT MANAGER	DATE
CINDY MILLER	RCE NO. 58116	PROJECT MANAGER	DATE
PATRICIA UEMATSU	RCE NO. 36762	PRINCIPAL ENGINEER	DATE

IRVINE RANCH WATER DISTRICT
BAKER WATER TREATMENT PLANT
PROJECT NO. 11218

TREATMENT BUILDING PIPE GALLERY

DRAWING **P301**
SHEET **392** OF **632**

FILENAME:8127A10-6232-P301.dwg
LAST UPDATED: 01/27/2012 01:31 PM
LAST SAVED BY: treq

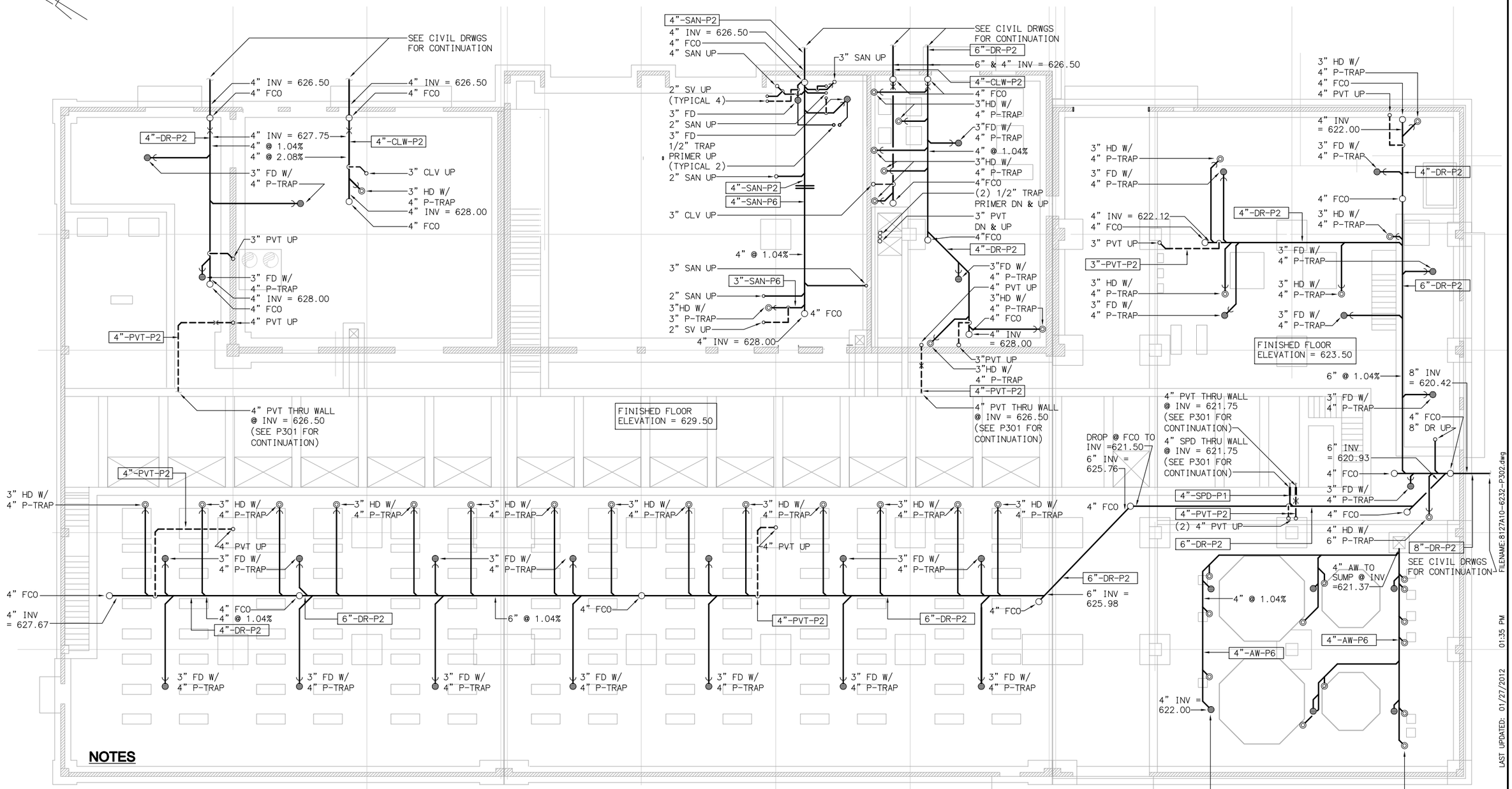

NOTES

1. REFER TO GENERAL MECHANICAL NOTES FOR ADDITIONAL INFORMATION AND REQUIREMENTS.
2. FOR CONTINUATION OF PIPING OUTSIDE OF STRUCTURES, SEE CIVIL DRAWINGS.
3. ALL WASTE & VENT PIPING BELOW GRADE IN EARTH SHALL BE ENCASED IN REINFORCED CONRETE AS SHOWN ON MECHANICAL DETAIL DRAWING M012, DETAILS 1, 2, & 4.

TREATMENT BUILDING FOUNDATION PLAN

SCALE: 1/8" = 1'-0"

FILENAME: 8127A10-6232-P302.dwg
LAST UPDATED: 01/27/2012 01:35 PM
LAST SAVED BY: treo

No.	DATE	REVISIONS	APPROVED

DESIGNED: MLS
DRAWN: MLS
CHECKED: TSD

RBF CONSULTING

carollo

IRVINE RANCH WATER DISTRICT

JIM MEYERHOFER	RCE NO. 48451	PROJECT MANAGER	DATE
CINDY MILLER	RCE NO. 58116	PROJECT MANAGER	DATE
PATRICIA UEMATSU	RCE NO. 36762	PRINCIPAL ENGINEER	DATE

IRVINE RANCH WATER DISTRICT
BAKER WATER TREATMENT PLANT
PROJECT NO. 11218

TREATMENT BUILDING FOUNDATION PLAN

DRAWING P302

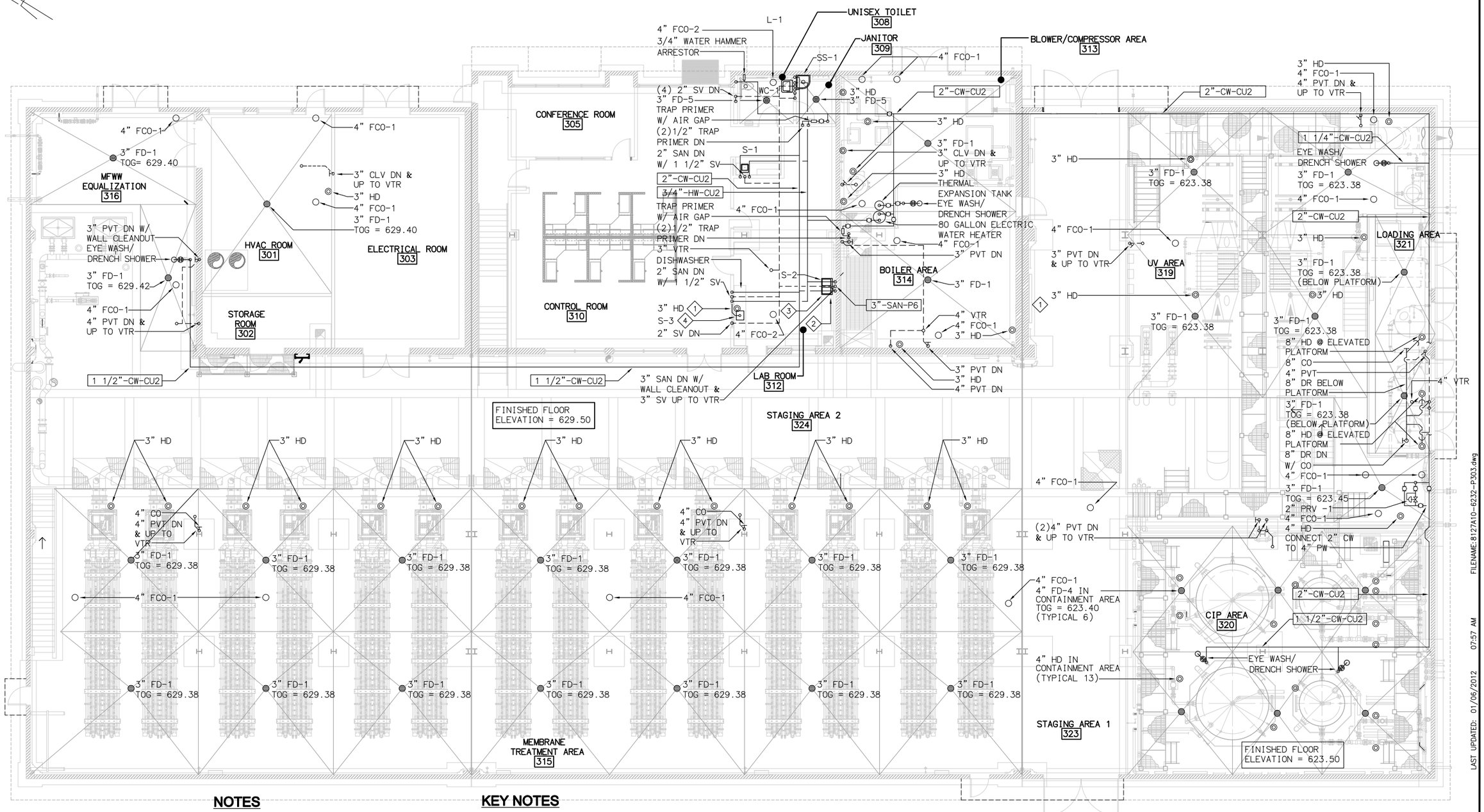

NOTES

1. REFER TO GENERAL MECHANICAL NOTES FOR ADDITIONAL INFORMATION AND REQUIREMENTS.

KEY NOTES

1. PROVIDE 3" POLYPROPYLENE HUB DRAIN FOR DISHWASHER PUMPED DRAINS.
2. CONNECT TO TWO (2) 1/2" SCHEDULE 80 SAMPLE LINES. PROVIDE BALL VALVES & EXTEND TO SAMPLE SINK FAUCETS.
3. PROVIDE COUNTER MOUNTED EYE WASH ON RIGHT SIDE OF SINK.
4. PROVIDE 3/4" HOSE BIBB IN SINK CABINET FOR HOT & COLD DISHWASHER CONNECTION,

PLAN - TREATMENT BUILDING

SCALE: 1/8" = 1'-0"

EQUIPMENT TAG NUMBERS ON THIS DRAWING ARE PRECEDED W/ UNLESS OTHERWISE LABELED

No.	DATE	REVISIONS	APPROVED

DESIGNED: MLS
DRAWN: MLS
CHECKED: TSD

RBF CONSULTING | carollo | IRVINE RANCH WATER DISTRICT

JIM MEYERHOFER	RCE NO. 48451	PROJECT MANAGER	DATE
CINDY MILLER	RCE NO. 58116	PROJECT MANAGER	DATE
PATRICIA UEMATSU	RCE NO. 36762	PRINCIPAL ENGINEER	DATE

IRVINE RANCH WATER DISTRICT
BAKER WATER TREATMENT PLANT
PROJECT NO. 11218

TREATMENT BUILDING UPPER LEVEL PLAN

DRAWING P303
SHEET 394 OF 632

FILENAME: 8127A10-6232-P303.dwg
LAST UPDATED: 01/06/2012 07:57 AM
LAST SAVED BY: trea

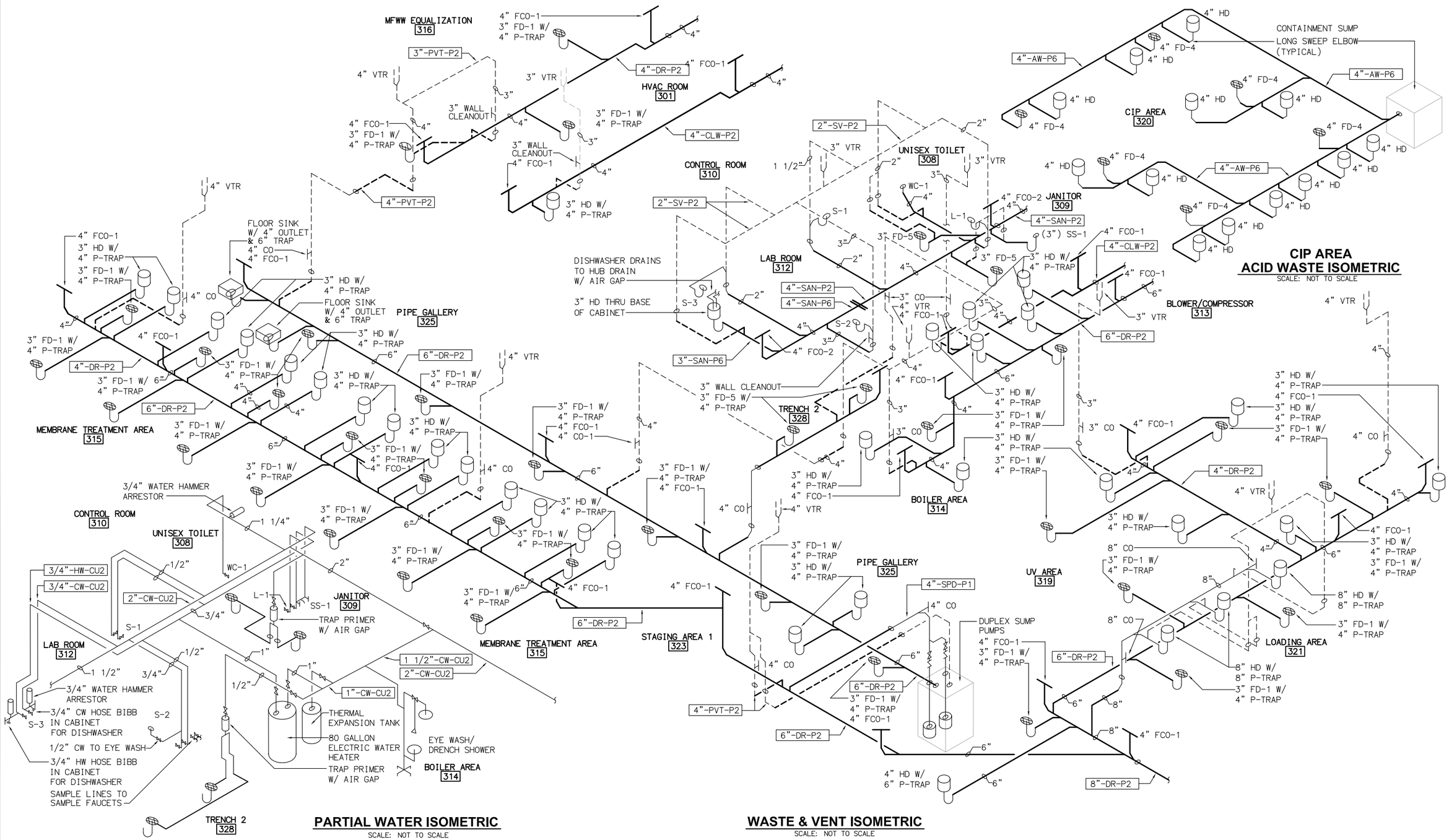

No.	DATE	REVISIONS	APPROVED

DESIGNED: MLS
DRAWN: MLS
CHECKED: TSD

RBF CONSULTING

carollo

IRVINE RANCH WATER DISTRICT

JIM MEYERHOFER	RCE NO. 48451	PROJECT MANAGER	DATE
CINDY MILLER	RCE NO. 58116	PROJECT MANAGER	DATE
PATRICIA UEMATSU	RCE NO. 36762	PRINCIPAL ENGINEER	DATE

IRVINE RANCH WATER DISTRICT
BAKER WATER TREATMENT PLANT
PROJECT NO. 11218

TREATMENT BUILDING
WASTE & VENT/WATER ISOMETRIC

DRAWING **P304**
SHEET 395 OF 632

FILENAME: 8127A10-6232-P304.dwg
LAST UPDATED: 01/06/2012 07:58 AM
LAST SAVED BY: treo

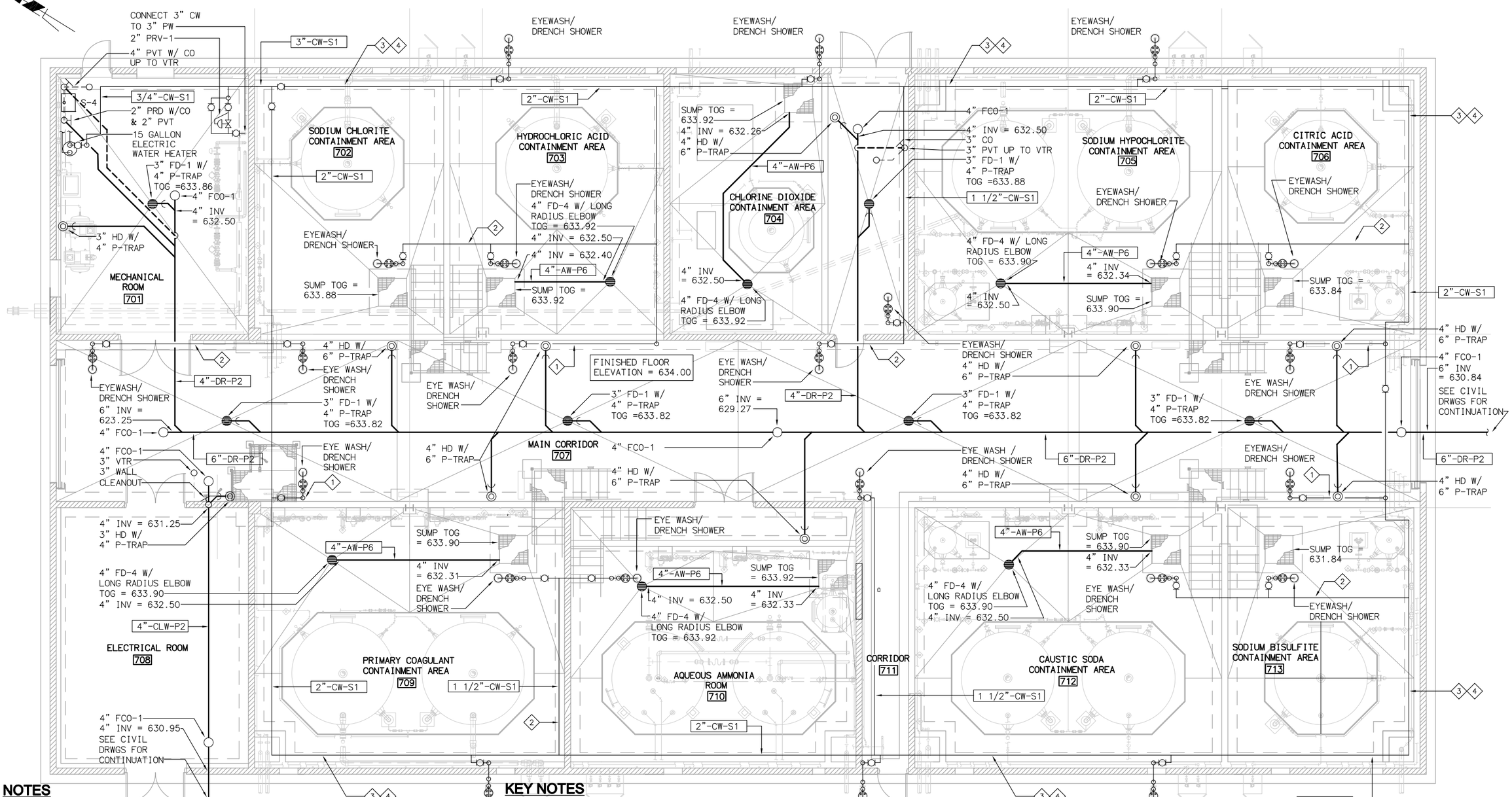

NOTES

1. REFER TO GENERAL MECHANICAL NOTES FOR ADDITIONAL INFORMATION AND REQUIREMENTS. SEE DMECHANICAL DRAWING M001.
2. ALL WASTE & VENT PIPING BELOW GRADE IN EARTH SHALL BE ENCASED IN REINFORCED CONRETE AS SHOWN ON MECHANICAL DETAIL DRAWING M012 DETAILS 1, 2, & 4.

KEY NOTES

1. ROUTE CW TO EYEWASH/DRENCH SHOWER ALONG OUTER CONTAINMENT WALL
2. ROUTE CW TO EYEWASH/DRENCH SHOWER @ ELEV = 650.50. COORDINATE ROUTING WITH MECHANICAL.
3. ELEV OF CW LOOP = 650.50. COORDINATE PIPE ROUTING WITH MECHANICAL.
4. SUPPORT CW FROM BUILDING WALL SIMILAR TO 1/M007.

PLUMBING PLAN

SCALE: 3/16" = 1'-0"

No.	DATE	REVISIONS	APPROVED

DESIGNED: MLS
DRAWN: MLS
CHECKED: TSD

RBF CONSULTING

carollo

IRVINE RANCH WATER DISTRICT

JIM MEYERHOFER	RCE NO. 48451	PROJECT MANAGER	DATE
CINDY MILLER	RCE NO. 58116	PROJECT MANAGER	DATE
PATRICIA UEMATSU	RCE NO. 36762	PRINCIPAL ENGINEER	DATE

IRVINE RANCH WATER DISTRICT
BAKER WATER TREATMENT PLANT
PROJECT NO. 11218

CHEMICAL BUILDING PLAN

DRAWING P701

SHEET 396 OF 632

FILENAME: 8127A10-6232-P701.dwg
LAST UPDATED: 01/06/2012 07:59 AM
LAST SAVED BY: Irea

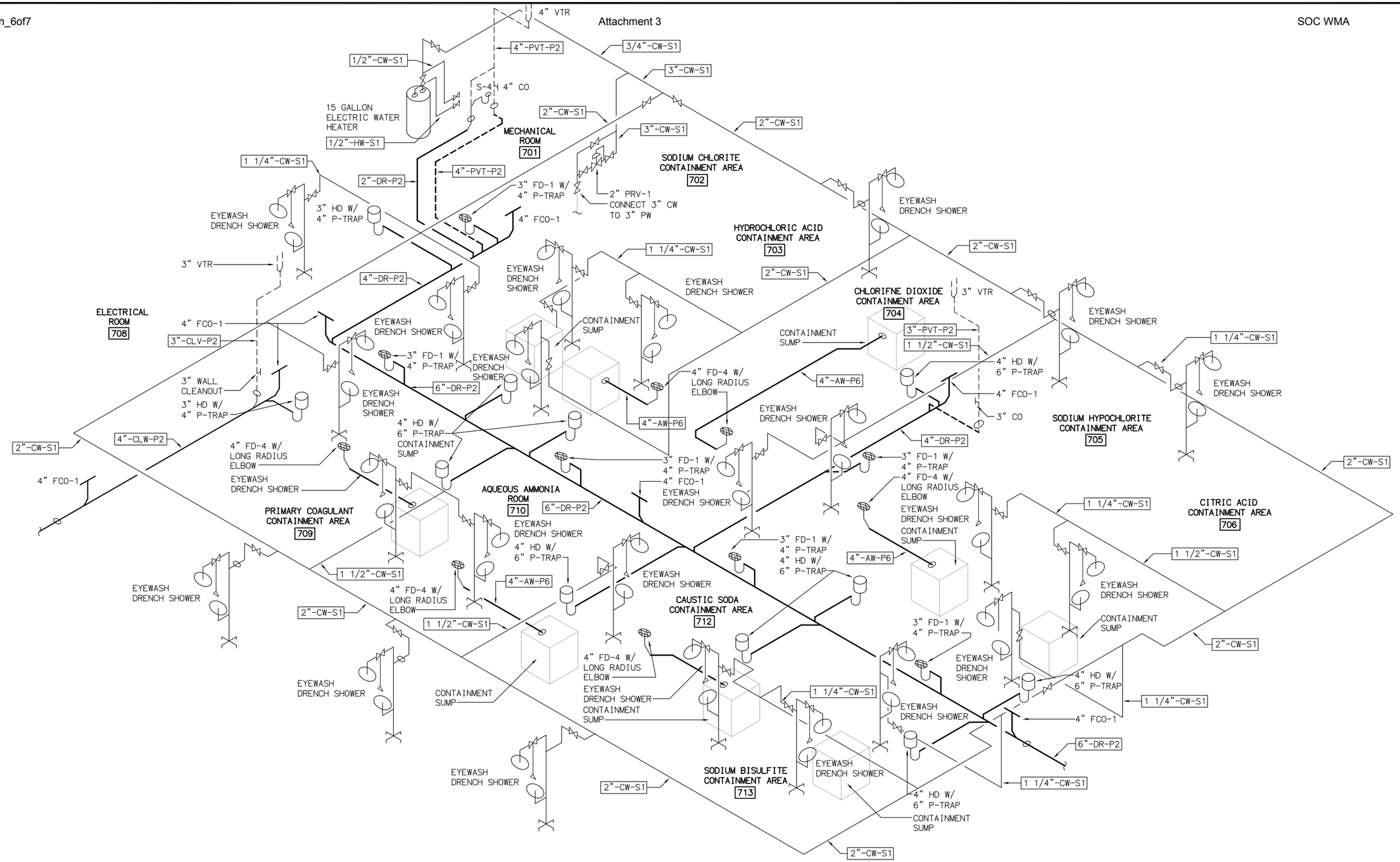

WATER/WASTE & VENT ISOMETRIC

SCALE: NOT TO SCALE

No.	DATE	REVISIONS	APPROVED

DESIGNED: MLS
DRAWN: MLS
CHECKED: TSD

RBF CONSULTING

carollo

IRVINE RANCH WATER DISTRICT

JIM MEYERHOFER	RCE NO. 48451	PROJECT MANAGER	DATE
CINDY MILLER	RCE NO. 58116	PROJECT MANAGER	DATE
PATRICIA UEMATSU	RCE NO. 36762	PRINCIPAL ENGINEER	DATE

IRVINE RANCH WATER DISTRICT
BAKER WATER TREATMENT PLANT
PROJECT NO. 11218

CHEMICAL BUILDING ISOMETRIC

DRAWING P702

SHEET 397 OF 632

FILENAME:8127A10-6232-P702.dwg
LAST UPDATED: 01/06/2012 08:01 AM
LAST SAVED BY: trea

GENERAL NOTES AND SPECIFICATIONS

1. ENTIRE INSTALLATION SHALL CONFORM TO THE REQUIREMENTS OF THE UNIFORM MECHANICAL CODE, UNIFORM BUILDING CODE, AND ALL OTHER APPLICABLE CODES AND REGULATIONS, INCLUDING CALIFORNIA ENERGY CONSERVATION STANDARDS DIVISION T-24.
2. COORDINATE THE ENTIRE INSTALLATION OF THE HVAC SYSTEM WITH THE WORK OF ALL OTHER TRADES PRIOR TO ANY FABRICATION OF INSTALLATION. PROVIDE ALL FITTINGS, OFFSETS AND TRANSITIONS AS REQUIRED FOR A COMPLETE WORKABLE INSTALLATION.
3. COORDINATE THE LOCATION OF ALL CEILING DIFFUSERS, REGISTERS AND GRILLES WITH THE ARCHITECTURAL REFLECTIVE CEILING PLAN, ELECTRICAL LIGHTING LAYOUT AND ARCHITECTURAL ROOM ELEVATIONS.
4. COORDINATE THE LOCATION OF ALL ROOF OPENINGS AND THE LOCATION OF ALL ROOF MOUNTED EQUIPMENT WITH THE STRUCTURAL, FIRE PROTECTION AND ARCHITECTURAL PLANS PRIOR TO ANY INSTALLATION. PROVIDE EQUIPMENT WEIGHTS AND PLATFORM SIZES.
5. ALL EQUIPMENT SHALL BE INSTALLED IN STRICT ACCORDANCE WITH THE EQUIPMENT MANUFACTURERS RECOMMENDATIONS. PROVIDE ALL FITTINGS, TRANSITIONS, DAMPERS VALVES AND OTHER DEVICES REQUIRED FOR A COMPLETE WORKABLE INSTALLATION.
6. MAINTENANCE LABEL SHALL BE AFFIXED TO ALL MECHANICAL EQUIPMENT AND A MAINTENANCE MANUAL SHALL BE PROVIDED FOR THE OWNERS USE.
7. ALL APPLIANCE AND PLUMBING VENTS AND DISCHARGE OF EXHAUST FANS SHALL BE AT LEAST TEN FEET IN HOIZONTAL DIRECTION OR THREE FEET ABOVE THE OUTSIDE AIR INTAKES FOR HVAC UNITS.
8. ALL LINE AND LOW VOLTAGE WIRING SHALL BE INSTALLED IN CONDUIT. ALL CONDUIT AND LINE AND LOW VOLTAGE WIRING, INCLUDING FINAL CONNECTIONS, SHALL BE FURNISHED AND INSTALLED AS INDICATED ON THE DRAWING.
9. (E) INDICATES ITEMS FURNISHED AND INSTALLED BY THE ELECTRICAL CONTRACTOR AS SHOWN ON THE DWGS. OR SPECIFIED IN THE ELECTRICAL SECTIONS OF THE SPECIFICATIONS.
10. (M) INDICATES ITEMS FURNISHED AND INSTALLED BY THE MECHANICAL CONTRACTOR AS SHOWN ON THE DWGS AND SPECIFIED IN THE MECHANICAL SPECIFICATIONS.
11. (C) INDICATES ITEMS FURNISHED AND INSTALLED BY THE CONTROLS CONTRACTOR AS SHOWN ON THE DWGS AND SPECIFIED IN THE MECHANICAL SPECIFICATIONS.
12. ACCESS TO ROOF EQUIPMENT SHALL COMPLY WITH CHAPTER 3 OF THE CMC.
13. ALL DUCT WORK SHALL BE CONSTRUCTED, ERECTED, SUSPENDED AND TESTED IN ACCORDANCE WITH THE MOST RESTRICTIVE OF LOCAL REGULATIONS, PROCEDURES DETAILED IN THE ASHRAE HANDBOOK OF FUNDAMENTALS, OR THE APPLICABLE STANDARDS ADOPTED BY THE SHEET METAL AND AIR CONDITIONING CONTRACTORS NATIONAL ASSOCIATION. DUCT SHALL BE GALVANIZED STEEL OR SPIRAL LOCKSEAM. ALL DUCT SIZES ARE NET FREE AREA. SUSPEND PER SMACNA GUIDELINES FOR SEISMIC RESTRAINT.
14. MANUAL VOLUME DAMPERS SHALL BE PROVIDED IN ALL DUCT BRANCHES.
15. ALL EQUIPMENT, DUCTS, PIPING AND OTHER DEVICES AND MATERIALS INSTALLED OUTSIDE OF THE BUILDING OR OTHERWISE EXPOSED TO THE WEATHER SHALL BE COMPLETELY WEATHER-PROOFED.
16. COORDINATE LOCATION OF EQUIPMENT WITH STRUCTURAL AND ARCHITECTURAL PLANS.
17. ALL EQUIPMENT DESIGNED TO BE FIXED IN POSITION SHALL BE SECURELY FASTENED IN PLACE.
18. DUCTWORK SHALL BE INSULATED OR LINED. SUPPLY AND RETURN DUCT INSULATION SHALL BE 2'' THICK, 3/4 LB. /CUBIC FT. DENSITY PER T-24 REQUIREMENTS. ALL DUCTWORK EXPOSED ON THE ROOF SHALL BE INTERNALLY LINED UNLESS OTHERWISE INDICATED OR SPECIFIED. ALL DUCT JOINTS SHALL BE SEALED.
19. AIR BALANCING: ALL SPACE CONDITIONING AND VENTILATION SYSTEMS SHALL BE BALANCED BY AN INDEPENDENT AABC CERTIFIED COMPANY TO THE QUANTITIES SPECIFIED IN ACCORDANCE WITH THE ASSOCIATED AIR BALANCE COUNCIL (AABC) NATIONAL STANDARDS (2002). PROVIDE FINAL FIELD ADJUSTMENTS AS DIRECTED. SUBMIT FIVE COPIES OF COMPLETE REPORT TO ARCHITECT AND ONE TO BUILDING ENGINEER FOR REVIEW.
20. MATERIALS EXPOSED WITHIN DUCTS OR PLENUMS SHALL HAVE A FLAME-SPRED INDEX OF NOT MORE THAN 25 AND A SMOKE DEVELOPED RATING OF NOT MORE THAN 50 WHEN TESTED IN ACCORDANCE WITH UBC STANDARD 8-1.

LEGEND AND ABBREVIATIONS

SYM	ABB.	DESCRIPTION
	CD	ROUND CEILING DIFFUSER
	CD	SQUARE CEILING DIFFUSER
	RG	RETURN GRILLE
	EG	EXHAUST AIR GRILLE
	RG	RETURN AIR GRILLE
	-	DUCT SECTION (SUPPLY)
	-	DUCT SECTION (RETURN)
	-	DUCT SECTION (EXHAUST)
	-	DIRECTION OF AIR FLOW
	-	CHANGE IN DUCT ELEVATION
	-	DUCT SIZE, FIRST FIGURE IS SIZE SHOWN
	BDD	BACKDRAFT DAMPER
	-	MOTORIZED DAMPER-ELECTRIC
	-	MOTORIZED DAMPER PNEUMATIC
	VD	MANUAL VOLUME DAMPER
	SWR	SIDE WALL REGISTER
	FLEX	FLEXIBLE DUCT
	TRANS	TRANSITION, ROUND TO RECTANGULAR
	-	PIPE GUIDE
	PA	PIPE ANCHOR
	-	STEAM TRAP
	(L)	ACOUSTICALLY LINED DUCT
CHWS	-	CHILLED WATER SUPPLY
CHWR	-	CHILLED WATER RETURN
HHWS	-	HEATING HOT WATER SUPPLY
HHWR	-	HEATING HOT WATER RETURN
LPS	-	LOW PRESSURE STEAM
HPS	-	HIGH PRESSURE STEAM
CR	-	STEAM CONDENSATE RETURN
CWS	-	CONDENSER WATER SUPPLY
CWR	-	CONDENSER WATER RETURN
TS	-	TEMPERATURE SENSOR
UNO	-	UNLESS NOTED OTHERWISE
UTR	-	UP THRU ROOF
	POC	POINT OF CONNECTION
	POR	POINT OF REMOVAL
	GV	GLOBE VALVE
	BV	BALL VALVE
	STR	STRAINER
	SFD	COMB. SMOKE/FIRE DAMPER
WMS	-	WIRE MESH SCREEN

TYPICAL EQUIPMENT DESIGNATION

BFV-XXXX

EQUIPMENT TYPE — EQUIPMENT NUMBER

LAST SAVED BY: timimhoff LAST UPDATED: 01/19/2012 06:56 PM FILENAME: 6232-H001.dwg

No.	DATE	REVISIONS	APPROVED

DESIGNED: TI
DRAWN: NT
CHECKED: TI

RBF CONSULTING

carollo

IRVINE RANCH WATER DISTRICT

TIM IMHOFF	RME NO. M027832	MECHANICAL ENGINEER	DATE
CINDY MILLER	RCE NO. 58116	PROJECT MANAGER	DATE
PATRICIA UEMATSU	RCE NO. 36762	PRINCIPAL ENGINEER	DATE

REGISTERED PROFESSIONAL ENGINEER TIMOTHY A. IMHOFF No. M027832 Exp. 6-30-12 MECHANICAL STATE OF CALIFORNIA

IRVINE RANCH WATER DISTRICT
BAKER WATER TREATMENT PLANT
PROJECT NO. 11218

HVAC NOTES AND LEGEND

DRAWING **H001**

SHEET **398** OF **632**

FAN SCHEDULE

UNIT NO.	MANUFACTURER & MODEL NO.	LOCATION	SERVICE	CFM	S.P. (IN.)	TYPE	HP	VOLTAGE	OPERATING WT. (LBS.)	DIMENSIONS	REMARKS
01-HVAC-EF-2101	COOK 80 SQN-B	FLOW CONTROL FACILITY	FLOW CONTROL FACILITY	800	.375	BELT	1/3	120V, 1ø	120	14"Wx22"Lx14"H	PROVIDE W/ INLET SAFETY SCREEN AND MOTOR COVER.
01-HVAC-EF-2111	COOK 210 SQN-B	TRABUCO CANYON PUMP STATION	PUMP ROOM	5,000	.5	BELT	2	460V, 3ø	280	32"Wx35"Lx32"H	PROVIDE W/ INLET SAFETY SCREEN AND MOTOR COVER. MOTOR TO BE MOUNTED ON SIDE OF FAN (SEE FLOOR PLAN).
01-HVAC-EF-2112	COOK 100 ACRUB	TRABUCO CANYON PUMP STATION	ELECTRICAL ROOM VFD HOOD	600	.4	BELT	1/6	120V, 1ø	100	26"ø x 23"H (ROOF CURB: 8"H)	PROVIDE W/ ROOF CURB AND BACKDRAFT DAMPER
02-HVAC-EF-2201	COOK 150 ACRUB	FOREBAY	LOWER LEVEL EXHAUST	2,000	.375	BELT	1/2	120V, 1ø	150	35"ø x 24"H (ROOF CURB: 8"H)	PROVIDE W/ EPOXY COATED WHEEL, ROOF CURB AND BACKDRAFT DAMPER
02-HVAC-EF-2202	COOK 180 ACRUB	FOREBAY	FEED PUMP MCC ROOM VFD HOOD	2,500	.5	BELT	1/2	120V, 1ø	180	40"ø x 36"H (ROOF CURB: 8"H)	PROVIDE W/ ROOF CURB AND BACKDRAFT DAMPER
02-HVAC-EF-2203	COOK 300 ACRUB	FOREBAY	PUMP ROOM	10,625	.5	BELT	3	460V, 3ø	440	55"ø x 50"H (ROOF CURB: 8"H)	PROVIDE W/ ROOF CURB AND BACKDRAFT DAMPER
02-HVAC-EF-2204	COOK 300 ACRUB	FOREBAY	PUMP ROOM	10,625	.5	BELT	3	460V, 3ø	440	55"ø x 50"H (ROOF CURB: 8"H)	PROVIDE W/ ROOF CURB AND BACKDRAFT DAMPER
02-HVAC-EF-2205	COOK 300 ACRUB	FOREBAY	PUMP ROOM	10,625	.5	BELT	3	460V, 3ø	440	55"ø x 50"H (ROOF CURB: 8"H)	PROVIDE W/ ROOF CURB AND BACKDRAFT DAMPER
02-HVAC-EF-2206	COOK 300 ACRUB	FOREBAY	PUMP ROOM	10,625	.5	BELT	3	460V, 3ø	440	55"ø x 50"H (ROOF CURB: 8"H)	PROVIDE W/ ROOF CURB AND BACKDRAFT DAMPER
03-HVAC-EF-2301	COOK GN-720	TREATMENT BUILDING	CONTROL AREA	470	.375	DIRECT	323 W	120V, 1ø	60	14"Wx17"Lx12"H	ABOVE CEILING. PROVIDE W/ FAN SPEED CONTROL.
03-HVAC-EF-2302	COOK 330 ACEB	TREATMENT BUILDING	BOILER ROOM	11,150	.5	BELT	3	460V, 3ø	500	53"ø x 50"H (ROOF CURB: 8"H)	PROVIDE W/ ROOF CURB AND BACKDRAFT DAMPER
05-HVAC-EF-2501	COOK 330 QMX	PRODUCT WATER PUMP STATION	PUMP ROOM	28,000	.5	BELT	10	460V, 3ø	1,600	50"Wx58"Lx75"H	FLOOR MOUNTED. PROVIDE W/ VFD CONTROL, ROOM TEMP. SENSOR, MOUNTING RAILS, ISOLATORS AND MOTOR COVER.
05-HVAC-EF-2502	COOK 180 ACWB	PRODUCT WATER PUMP STATION	ELECTRICAL ROOM VFD HOOD	2,500	.5	BELT	1/2	120V, 1ø	180	40"ø x 36"	WALL MOUNTED ON EXTERIOR OF BUILDING AT 11'-0" ABOVE GRADE. PROVIDE W/ BACKDRAFT DAMPER.
07-HVAC-EF-2701	COOK 135 ACW-B	CHEMICAL BUILDING	SODIUM CHLORITE CONTAINMENT	900	.375	BELT	1/6	120V, 1ø	100	31'ø x 29"	WALL MOUNTED ON EXTERIOR OF BUILDING AT 13'-0" ABOVE GRADE. PROVIDE W/ BACKDRAFT DAMPER.
07-HVAC-EF-2702	COOK 135 ACW-B	CHEMICAL BUILDING	HYDROCHLORIC ACID CONTAINMENT	900	.375	BELT	1/6	120V, 1ø	100	31'ø x 29"	WALL MOUNTED ON EXTERIOR OF BUILDING AT 13'-0" ABOVE GRADE. PROVIDE W/ BACKDRAFT DAMPER.
07-HVAC-EF-2703	COOK 120 ACW-B	CHEMICAL BUILDING	CHLORINE DIOXIDE ROOM	800	.375	BELT	1/6	120V, 1ø	100	31'ø x 29"	WALL MOUNTED ON EXTERIOR OF BUILDING AT 13'-0" ABOVE GRADE. PROVIDE W/ BACKDRAFT DAMPER.
07-HVAC-EF-2704	COOK 165 ACW-B	CHEMICAL BUILDING	SODIUM HYPOCHLORITE CONTAINMENT	1,500	.375	BELT	1/4	120V, 1ø	110	35"ø x 31"	WALL MOUNTED ON EXTERIOR OF BUILDING AT 13'-0" ABOVE GRADE. PROVIDE W/ BACKDRAFT DAMPER.
07-HVAC-EF-2705	COOK 135 ACW-B	CHEMICAL BUILDING	CITRIC ACID CONTAINMENT	900	.375	BELT	1/6	120V, 1ø	100	31'ø x 29"	WALL MOUNTED ON EXTERIOR OF BUILDING AT 13'-0" ABOVE GRADE. PROVIDE W/ BACKDRAFT DAMPER.
07-HVAC-EF-2706	COOK 135 ACW-B	CHEMICAL BUILDING	SODIUM BISULFITE CONTAINMENT	900	.375	BELT	1/6	120V, 1ø	100	31'ø x 29"	WALL MOUNTED ON EXTERIOR OF BUILDING AT 13'-0" ABOVE GRADE. PROVIDE W/ BACKDRAFT DAMPER.
07-HVAC-EF-2707	COOK 165 ACW-B	CHEMICAL BUILDING	CAUSTIC SODA CONTAINMENT	1,500	.375	BELT	1/4	120V, 1ø	110	35"ø x 31"	WALL MOUNTED ON EXTERIOR OF BUILDING AT 13'-0" ABOVE GRADE. PROVIDE W/ BACKDRAFT DAMPER.
07-HVAC-EF-2708	COOK 135 ACW-B	CHEMICAL BUILDING	AQUEOUS AMONIA ROOM	1,000	.375	BELT	1/6	120V, 1ø	100	31'ø x 29"	WALL MOUNTED ON EXTERIOR OF BUILDING AT 13'-0" ABOVE GRADE. PROVIDE W/ BACKDRAFT DAMPER.
07-HVAC-EF-2709	COOK 180 ACW-B	CHEMICAL BUILDING	PRIMARY COAGULANT CONTAINMENT	1,600	.375	BELT	1/4	120V, 1ø	140	40"ø x 36"	WALL MOUNTED ON EXTERIOR OF BUILDING AT 13'-0" ABOVE GRADE. PROVIDE W/ BACKDRAFT DAMPER.
03-HVAC-SF-2301	COOK GN-720	TREATMENT BUILDING	DAIKIN SYSTEM OSA	500	.375	DIRECT	323 W	120V, 1ø	60	14"Wx17"Lx12"H	ABOVE CEILING. PROVIDE W/ FAN SPEED CONTROL.
02-HVAC-SF-2302	COOK 300 QMX	TREATMENT BUILDING	TREATMENT AREA	20,000	1.25	BELT	10	460V, 3ø	1,275	46"Wx54"Lx69"H	FLOOR MOUNTED. PROVIDE W/ VFD CONTROL, INDOOR AND OUTDOOR TEMP. SENSORS, MOUNTING RAILS, ISOLATORS, OUTLET SAFETY GUARD AND MOTOR COVER. VFD TO VARY CFM BETWEEN 8,300 AND 20,000. SEE SEQUENCE ON FLOOR PLAN.
05-HVAC-SF-2501	COOK 135 SQN-D	CLEARWELL INLET VALVE VAULT	CLEARWELL INLET VALVE VAULT	1,200	.4	DIRECT	1/6	120V, 1ø	190	21"Wx21"Lx23"H	PROVIDE W/ SINGLE SIDE DISCHARGE PACKAGE AND OUTLET SAFETY SCREEN.

TYPICAL EQUIPMENT DESIGNATION

BFV-XXXX

EQUIPMENT TYPE — EQUIPMENT NUMBER

FILENAME: 6232-H002.dwg

LAST UPDATED: 01/19/2012 05:09 PM

LAST SAVED BY: noeltapia

No.	DATE	REVISIONS	APPROVED

DESIGNED: TI
DRAWN: NT
CHECKED: TI

RBF CONSULTING

carollo

IRVINE RANCH WATER DISTRICT

TIM IMHOFF RME NO. M027832 MECHANICAL ENGINEER DATE
CINDY MILLER RCE NO. 58116 PROJECT MANAGER DATE
PATRICIA UEMATSU RCE NO. 36762 PRINCIPAL ENGINEER DATE

REGISTERED PROFESSIONAL ENGINEER TIMOTHY A. IMHOFF No. M027832 Exp. 6-30-12 MECHANICAL STATE OF CALIFORNIA

IRVINE RANCH WATER DISTRICT
BAKER WATER TREATMENT PLANT
PROJECT NO. 11218

HVAC EQUIPMENT SCHEDULES I

DRAWING
H002
SHEET
399 OF **632**

EVAPORATOR UNIT SCHEDULE

UNIT NO.	MANUFACTURER & MODEL	SERVICE	LOCATION	SYSTEM TYPE	SUPPLY CFM	EXT SP IN. W.G.	SUPPLY FAN MOTOR HP	COOLING CAPACITY ENT. AIR °F DB	COOLING CAPACITY ENT. AIR % RH	COOLING CAPACITY MBH SENS.	COOLING CAPACITY MBH TOTAL	COMPRESSOR DATA QTY.	COMPRESSOR DATA REFRIGERANT	EVAPORATOR DATA COIL FACE AREA (SQFT)	EVAPORATOR DATA ROWS	EVAPORATOR DATA FACE VEL. (FPM)	HEATING CAPACITY MBH	ELECTRICAL DATA VOLT	ELECTRICAL DATA PH	ELECTRICAL DATA HZ	ELECTRICAL DATA MAX FLA	ELECTRICAL DATA MIN. CKT AMPS	ELECTRICAL DATA MAX FUSE	FILTRATION EFFICIENCY	CONNECTION SIZES CONDENSATE DRAIN	WEIGHT LB	DIMENSIONS	REMARKS
02-HVAC-EVP-2201	COMPU-AIRE CAA-3034	FOREBAY	ELEC. ROOM	AIR COOLED	14,500	0.5"	5 HP EACH (QTY=2)	75	62	315	379.8	2	R-407C	34	4	426.5	-	460	3	60	67.6	74.4	100	MERV 8	1-1/2" (PUMPED)	2,800	133"Wx35"x74"H	30 TON UPFLOW. PROVIDE W/ T'STAT
03-HVAC-EVP-2301	DAIKIN FXZQ07	TREATMENT BUILDING	STORAGE ROOM	AIR COOLED	320	-	55 W	77	63	5.3	5.9	-	R-410A	2.9	2	110.3	6.5	208/230	1	60		0.8	15	FACTORY FURNISHED PERMANENT	1" (PUMPED)	50	23"Lx23"Wx12"H	PROVIDE W/ BRC1E71 T'STAT
03-HVAC-EVP-2302	DAIKIN FXFQ36	TREATMENT BUILDING	ELEC. ROOM	AIR COOLED	1180	-	210 W	74	58	24.2	24.2	-	R-410A	5.35	2	220.6	-	208/230	1	60		1.4	15	FACTORY FURNISHED PERMANENT	1-1/4" (PUMPED)	75	34"Lx34"Wx12"H	PROVIDE W/ BRC1E71 T'STAT
03-HVAC-EVP-2303	DAIKIN FXFQ36	TREATMENT BUILDING	ELEC. ROOM	AIR COOLED	1180	-	210 W	74	58	24.2	24.2	-	R-410A	5.35	2	220.6	-	208/230	1	60		1.4	15	FACTORY FURNISHED PERMANENT	1-1/4" (PUMPED)	75	34"Lx34"Wx12"H	PROVIDE W/ BRC1E71 T'STAT
03-HVAC-EVP-2304	DAIKIN FXFQ36	TREATMENT BUILDING	ELEC. ROOM	AIR COOLED	1180	-	210 W	74	58	24.2	24.2	-	R-410A	5.35	2	220.6	-	208/230	1	60		1.4	15	FACTORY FURNISHED PERMANENT	1-1/4" (PUMPED)	75	34"Lx34"Wx12"H	PROVIDE W/ BRC1E71 T'STAT
03-HVAC-EVP-2305	DAIKIN FXFQ24	TREATMENT BUILDING	CONFERENCE ROOM	AIR COOLED	780	-	70 W	78	65	15.8	18.5	-	R-410A	3.56	2	219.1	20.9	208/230	1	60		0.5	15	FACTORY FURNISHED PERMANENT	1-1/4" (PUMPED)	70	34"Lx34"Wx10"H	PROVIDE W/ BRC1E71 T'STAT
03-HVAC-EVP-2306	DAIKIN FXZQ12	TREATMENT BUILDING	ENTRY/ OFFICE	AIR COOLED	335	-	55 W	76	63	6.9	9.1	-	R-410A	2.9	2	115.5	10.4	208/230	1	60		0.8	15	FACTORY FURNISHED PERMANENT	1" (PUMPED)	50	23"Lx23"Wx12"H	PROVIDE W/ BRC1E71 T'STAT
03-HVAC-EVP-2307	DAIKIN FXZQ07	TREATMENT BUILDING	COPY/FILE ROOM	AIR COOLED	320	-	55 W	75	62	5.3	5.7	-	R-410A	2.9	2	110.3	6.5	208/230	1	60		0.8	15	FACTORY FURNISHED PERMANENT	1" (PUMPED)	50	23"Lx23"Wx12"H	PROVIDE W/ BRC1E71 T'STAT
03-HVAC-EVP-2308	DAIKIN FXZQ07	TREATMENT BUILDING	COPY/FILE ROOM	AIR COOLED	320	-	55 W	77	64	5.2	5.7	-	R-410A	2.9	2	110.3	6.5	208/230	1	60		0.8	15	FACTORY FURNISHED PERMANENT	1" (PUMPED)	50	23"Lx23"Wx12"H	PROVIDE W/ BRC1E71 T'STAT
03-HVAC-EVP-2309	DAIKIN FXMQ36	TREATMENT BUILDING	CONTROL ROOM	AIR COOLED	1120	0.6"	375 W	76	62	24.9	27.2	-	R-410A	3.43	3	326.5	31.3	208/230	1	60		2.9	15	(2) 20"x16" CAMFIL FARR 30/30 (MERV 8)	1-1/4" (PUMPED)	125	28"Lx56"Wx12"H	PROVIDE W/ FILTERS MOUNTED IN RETURN PLENUM & BRC1E71 T'STAT.
03-HVAC-EVP-2310	DAIKIN FXZQ12	TREATMENT BUILDING	LAB ROOM	AIR COOLED	335	-	55 W	76	63	6.9	9.1	-	R-410A	2.9	2	115.5	10.4	208/230	1	60		0.8	15	FACTORY FURNISHED PERMANENT	1" (PUMPED)	50	23"Lx23"Wx12"H	PROVIDE W/ BRC1E71 T'STAT
05-HVAC-EVP-2501	COMPU-AIRE CAA-2534	PRODUCT WATER PUMP STAION	ELEC. ROOM	AIR COOLED	12,000	0.5"	10	75	62	233.5	266.2	2	R-407C	24	4	500	-	460	3	60	63.2	69.5	100	MERV 8	1-1/2" (PUMPED)	2,300	100"Wx35"x74"H	25 TON UPFLOW. PROVIDE W/ T'STAT
07-HVAC-EVP-2701	COMPU-AIRE MTE-P-334	CHEMICAL BUILDING	ELEC. ROOM	AIR COOLED	1260	0.33"	3/4	75	62	28.2	33.85	-	R-407C	2.6	4	484.6	-	460	3	60	2.5	3.1	15	MERV 8	1-1/8"	225	47"Lx23"Wx24"H	3 TON SUSPENDED UNIT. PROVIDE W/ T'STAT & BOTTOM AIR DIST. PLENUM

HEAT RECOVERY BRANCH SELECTOR SCHEDULE

UNIT NO.	MANUFACTURER & MODEL	SERVICE	ELECTRICAL DATA VOLT	PH	HZ	MIN. CKT AMPS	WEIGHT LB	DIMENSIONS
03-HVAC-BS-2301, 03-HVAC-BS-2305 THRU 03-HVAC-BS-2310	DAIKIN BSVQ36	TREATMENT BUILDING	208/230	1	60	0.1	40	16"Lx13"Wx9"H

TYPICAL EQUIPMENT DESIGNATION

HVAC-XXXX

EQUIPMENT TYPE — EQUIPMENT NUMBER

CONDENSING UNIT SCHEDULE

AIR COOLED CONDENSING

UNIT NO.	MANUFACTURER & MODEL	LOCATION	SERVICE	AMBIENT °F DB	EER (SEER)	COP	CONDENSER FAN QTY.	CONDENSER FAN CFM	CONDENSER FAN HP	COMPRESSOR DATA QTY.	COMPRESSOR DATA REFRIGERANT	ELECTRICAL DATA FLA	MCA	MFS	VOLT	PH	HZ	WEIGHT	DIMENSIONS	REMARKS
02-HVAC-CND-2201	COMPU-AIRE ACCB-3034-V	FOREBAY	FEED PUMP MCC ROOM	95	12.8	-	3	15,000	10	-	R-407C	12.6	15.8	20	460	3	60	2,200	132"x35"x74"H	PROVIDE W/ BACNET CARD, SIGHT GLASS, FILTER DRIER & FACTORY DISCONNECT.
* 03-HVAC-CND-2301	DAIKIN REMQ96PAYD	TREATMENT BUILDING	CONTROL ELECTRICAL STORAGE	95	11.4	3.3	1	6,530	0.75 KW	2	R-410A	12.3	20.3	25	460	3	60	600	37"x31"x67"H	PROVIDE W/ BACNET CARD & BHFP26P90U OUTDOOR MULTI CONNECTION PIPE KIT
* 03-HVAC-CND-2302	DAIKIN REMQ72PAYD	TREATMENT BUILDING	CONTROL ELECTRICAL STORAGE	95			1	6,350	0.75 KW	1	R-410A	7.1	20.2	25	460	3	60	500	37"x31"x67"H	
05-HVAC-CND-2501	COMPU-AIRE ACCB-2534-V	PRODUCT WATER PUMP STAION	ELECTRICAL ROOM	95	13.8	-	2	12,000	7.5	-	R-407C	10.1	12.6	15	460	3	60	2,200	100"x35"x74"H	PROVIDE W/ BACNET CARD, SIGHT GLASS, FILTER DRIER & FACTORY DISCONNECT.
07-HVAC-CND-2701	COMPU-AIRE CFCU-334	CHEMICAL BUILDING	ELECTRICAL ROOM	95	(13.5)	-	1	1,670	3/4	1	R-407C	8.7	10.9	20	460	3	60	425	47"x23"x24"H	PROVIDE W/ BACNET CARD, SIGHT GLASS, FILTER DRIER & FACTORY DISCONNECT.

* CND-2301 AND CND-2302 WILL HAVE SEPARATE POWER CONNECTIONS, BUT WILL BE PIPED TOGETHER AND OPERATE AS ONE UNIT. EER & COP RATINGS ARE FOR COMBINED UNIT. (COMBINED UNIT MODEL # - REYQ168PAYD)

A/C UNIT SCHEDULE

UNIT NO.	MANUFACTURER & MODEL NO.	NOMINAL TONS	COOLING CAP. @ 80°F dB/67°F WB TOTAL	SENS.	AMB °F	SUPPLY AIR CFM	ESP	EER (SEER)	HEATING CAPACITY (MBH)	COP (HSPF)	ELECTRICAL COMPRESSOR NO.	RLA	LRA	SUPPLY FAN HP	FLA	OUTDOOR FAN NO.	FLA	MIN CKT AMPS	MAX. FUSE	VOLTAGE	OP. WT.	UNIT DIMENSIONS	REMARKS	MINIMUM O.S.A. CFM
01-HVAC-AC-2111	TRANE THC036	3	37,250	26,700	95	1200	1.0	(15)	-	-	1	5.1	35	1.0	2.5	1	0.6	9.5	15	460V, 3ø	600	70"Lx45"Wx37"H	PROVIDE W/ R-410A REFRIGERANT, BELT DRIVE MOTOR, ENTHALPY ECONOMIZER W/ BAROMETRIC RELIEF, BACNET CARD, ELECTRONIC PROGRAMMABLE T-24 APPROVED T'STAT, LEVEL CONCRETE PAD AND FACTORY INSTALLED DISCONNECT.	30

FILENAME: 6232-H003.dwg

LAST UPDATED: 01/19/2012 05:11 PM

LAST SAVED BY: noeltapia

No.	DATE	REVISIONS	APPROVED

DESIGNED: TI

DRAWN: NT

CHECKED: TI

RBF CONSULTING

carollo

IRVINE RANCH WATER DISTRICT

TIM IMHOFF RME NO. M027832 MECHANICAL ENGINEER DATE

CINDY MILLER RCE NO. 58116 PROJECT MANAGER DATE

PATRICIA UEMATSU RCE NO. 36762 PRINCIPAL ENGINEER DATE

REGISTERED PROFESSIONAL ENGINEER TIMOTHY A. IMHOFF No. M027832 Exp. 6-30-12 MECHANICAL STATE OF CALIFORNIA

IRVINE RANCH WATER DISTRICT
BAKER WATER TREATMENT PLANT
PROJECT NO. 11218

HVAC EQUIPMENT SCHEDULES II

DRAWING H003

SHEET 400 OF 632

EXPANSION & HOT WATER STORAGE TANKS

UNIT NO.	SIZE	CAPACITY	LOCATION	SERVICE	OPER. WT. (LBS)	REMARKS
03-HVAC-TK-2308	14"ø x 34"	11 GAL.	TREATMENT BUILDING	BOILER EXPANSION TANK	200	TACO MODEL CBX 42
03-HVAC-TK-2315	24"ø x 85"	132 GAL.	TREATMENT BUILDING	CIP FILL EXPANSION TANK	570	TACO MODEL PAX 500
03-HVAC-TK-2320	60"ø x 129"	1468 GAL.	TREATMENT BUILDING	HOT WATER STORAGE	14,600	VERTICAL TANK, GLASS LINED W/ MAGNESIUM ANODE.

HOT WATER BOILERS

UNIT NO.	MFR. & MODEL NO.	LOCATION	CAPACITY (BTUH)		HOT WATER		ELECTRICAL		OPER. WT. (LBS)	REMARKS
			INPUT	OUTPUT	°F. IN	°F. OUT	FLA	VOLTAGE		
03-HVAC-BOL-2301	PATTERSON-KELLEY N1500-MFD	TREATMENT BUILDING	1,500,000	1,275,000	149.5	180	12	208V-1ø-60HZ	1000	85% EFFICEINT
03-HVAC-BOL-2302	PATTERSON-KELLEY N1500-MFD	TREATMENT BUILDING	1,500,000	1,275,000	149.5	180	12	208V-1ø-60HZ	1000	85% EFFICEINT
03-HVAC-BOL-2303	PATTERSON-KELLEY N1500-MFD	TREATMENT BUILDING	1,500,000	1,275,000	149.5	180	12	208V-1ø-60HZ	1000	85% EFFICEINT

HOT WATER SYSTEM ACCESSORIES

UNIT NO.	MANUFACTURER & MODEL NO.	SIZE	LOCATION	SERVICE	REMARKS
03-HVAC-BFP-2307	WATTS 909	16"Lx9"Hx3"W	TREATMENT BUILDING	BOILER MAKE-UP	1" REDUCED PRESSURE ZONE BACKFLOW PREVENTOR
03-HVAC-PRV-2304	TACO 3350-T	4"Lx6"Hx2"W	TREATMENT BUILDING	BOILER MAKE-UP	PRV SET AT 25 PSI
03-HVAC-PRV-2330	WATTS N223B	21"Lx17"Hx11"W	TREATMENT BUILDING	CIP MAKE-UP	3" PRV. PRV SET AT 80 PSI.
03-HVAC-SPR-2305	TACO AC6F	20"ø x 37"	TREATMENT BUILDING	BOILER SYSTEM	AIR SEPARATOR, PROVIDE WITH STRAINER.
03-HVAC-AVNT-2306 03-HVAC-AVNT-2309 03-HVAC-AVNT-2319	TACO 419	2"ø x 4"	TREATMENT BUILDING	BOILER/CIP SYSTEM	AUTO AIR VENT
03-HVAC-FCV-2324	GRISWOLD 311-4 B	19"Lx9"Hx9"W	TREATMENT BUILDING	CIP FILL	4" FLANGE AUTOMATIC FLOW CONTROL VALVE SET AT 300 GPM.

PLATE FRAME HEAT EXCHANGER

UNIT NO.	MFR. & MODEL NO.	LOCATION	HOT SIDE				COLD SIDE				OPER. WT. (LBS)	REMARKS
			GPM	EWT °F	LWT °F	PD PSI	GPM	EWT °F	LWT °F	PD PSI		
03-HVAC-HX-2310	ITT P37-DW	TREATMENT BUILDING	300	180	149.5	9.5	100	50	140	2.1	1450	DOUBLE WALL HEAT EXCHANGER W/ INTERSTITIAL SPACE VENTED TO ROOM PER CPC 603.4.4.

CIRCULATING PUMPS

UNIT NO.	MFR. & MODEL NO.	LOCATION	SERVICE	GPM	THD FT.	RPM	HP	VOLTAGE	OPER. WT. (LBS)	REMARKS
03-HVAC-P-2301	TACO KV-1941	TREATMENT BUILDING	BOILER FEED PUMP	100	40	1750	2	460V-3ø-60HZ	150	63% EFFICIENT; PROVIDE W/ VFD
03-HVAC-P-2302	TACO KV-1941	TREATMENT BUILDING	BOILER FEED PUMP	100	40	1750	2	460V-3ø-60HZ	150	63% EFFICIENT; PROVIDE W/ VFD
03-HVAC-P-2303	TACO KV-1941	TREATMENT BUILDING	BOILER FEED PUMP	100	40	1750	2	460V-3ø-60HZ	150	63% EFFICIENT; PROVIDE W/ VFD
03-HVAC-P-2311	TACO KV-1941	TREATMENT BUILDING	CIP FILL	100	40	1750	2	460V-3ø-60HZ	150	63% EFFICIENT; PROVIDE W/ VFD
03-HVAC-P-2312	TACO KV-1941	TREATMENT BUILDING	CIP FILL	100	40	1750	2	460V-3ø-60HZ	150	63% EFFICIENT; PROVIDE W/ VFD (100% BACKUP)

PIPE SCHEDULE

ABBREV.	SERVICE	MINIMUM TEST PRESSURE (PSI)
HWS	HOT WATER SUPPLY	--
HWR	HOT WATER RETURN	--
HWB	HOT WATER BYPASS	--
SUW2	SOFTENED UTILITY WATER 2	150
CIPS	CIP TANK SUPPLY	--

THERMOSTATIC MIXING VALVES

UNIT NO.	MANUFACTURER & MODEL NO.	LOCATION	SERVICE	TEMP. (°F)	FLOW (GPM)	PRESSURE DROP (PSI)	REMARKS
03-HVAC-TMV-2341	LAWLER SERIES 66 VALVE 66-150	TREATMENT BUILDING	CIP FILL	86	100	20	BRONZE FINISH, 50°-100°F TEMPERATURE RANGE.
03-HVAC-TMV-2342	LAWLER SERIES 66 VALVE 66-150	TREATMENT BUILDING	CIP FILL	86	100	20	BRONZE FINISH, 50°-100°F TEMPERATURE RANGE.
03-HVAC-TMV-2343	LAWLER SERIES 66 VALVE 66-150	TREATMENT BUILDING	CIP FILL	86	100	20	BRONZE FINISH, 50°-100°F TEMPERATURE RANGE.

PIPE MATERIAL SCHEDULE

ABBREV.	MATERIAL	FITTINGS
CU1	COPPER, HARD TEMPERED TYPE L	COPPER, SOLDERED JOINTS
S1	STAINLESS STEEL TYPE 316L, SCHED. 10 OR HIGHER	TYPE 316L STAINLESS STEEL
S2	STEEL, SCHED. 40, BLACK	ECONO-WEIGHT WELDED FITTINGS

TYPICAL EQUIPMENT DESIGNATION

BFV-XXXX

EQUIPMENT TYPE — EQUIPMENT NUMBER

TYPICAL PIPE DESIGNATION

MATERIAL ABBREVIATION — ASTERISK (*) SHOWN THIS LOCATION INDICATES INSULATED PIPE, SEE NOTE 1.

2"-SH-P1*

PIPE DIAMETER — PIPE SCHEDULE

NOTES:
1. REFER TO SPECIFICATION SECTION 15800 FOR PIPING INSULATION REQUIREMENTS.

FILENAME: 6232-H004.dwg

LAST UPDATED: 01/19/2012 05:11 PM

LAST SAVED BY: noeltapia

No.	DATE	REVISIONS	APPROVED

DESIGNED: TI
DRAWN: NT
CHECKED: TI

RBF CONSULTING

carollo

IRVINE RANCH WATER DISTRICT

TIM IMHOFF RME NO. M027832 MECHANICAL ENGINEER DATE
CINDY MILLER RCE NO. 58116 PROJECT MANAGER DATE
PATRICIA UEMATSU RCE NO. 36762 PRINCIPAL ENGINEER DATE

REGISTERED PROFESSIONAL ENGINEER TIMOTHY A. IMHOFF No. M027832 Exp. 6-30-12 MECHANICAL STATE OF CALIFORNIA

IRVINE RANCH WATER DISTRICT
BAKER WATER TREATMENT PLANT
PROJECT NO. 11218

HVAC EQUIPMENT SCHEDULES III

DRAWING H004

SHEET 401 OF 632

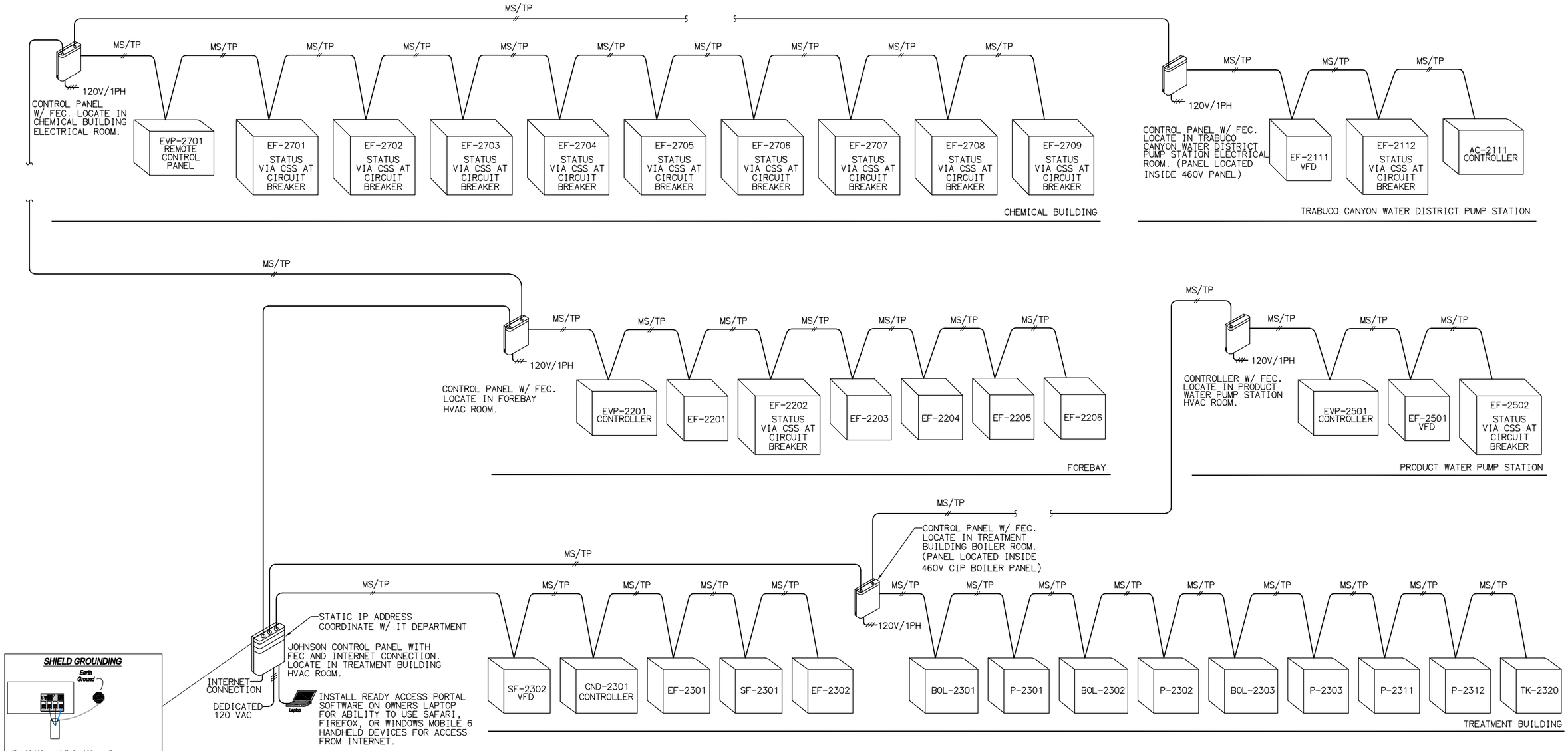

SHIELD GROUNDING

If a shield is used, it should be earth grounded at one and only one point for the entire bus segment. (Preferably in the NAE Panel.) The shield screws on the controllers are simply a convenient way to continue the daisy chain of the bus. They are not attached to earth ground.

LEGEND

BMCS = BUILDING MANAGEMENT CONTROL SYSTEM
BCU = BUILDING CONTROL UNIT
CSS = CURRENT SENSING SWITCH
CSS/R = COMBINATION CURRENT SENSING SWITCH AND RELAY
DA = DAMPER ACTUATOR
DP = DIFFERENTIAL PRESSURE SWITCH
E.C. = DIVISION 16000 ELECTRICAL CONTRACTOR
HE = HUMIDITY SENSING ELEMENT
OPM = OPEN PROTOCAL MODULE
PCM = PROGRAMMABLE CONTROL MODULE
PET = PRESSURE TO ELECTRIC TRANSDUCER
SHL = STATIC HIGH LIMIT MANUAL SAFETY
SLL = STATIC LOW LIMIT MANUAL SAFETY
SD = SMOKE DETECTOR

SPT = STATIC PRESSURE TIP
S/S = START/STOP
TE = TEMPERATURE SENSING ELEMENT
TCM = THERMOSTAT CONTROL MODULE
UPCM = UNIVERSAL PROGRAMMABLE CONTROL MODULE
UCM = UNIT CONTROL MODULE
VA = VALVE

DI = DIGITAL INPUT
DO = DIGITAL OUTPUT
AI = ANALOG INPUT
AO = ANALOG OUTPUT

S #18 AWG TWISTED SHIELDED 2-CONDUCTOR CABLE

NOTES:
1. ALL 120-VOLT WIRING AND CONDUIT REQUIRED FOR BUILDING AUTOMATION SYSTEM SHALL BE THE RESPONSIBILITY OF THE ELECTRICAL CONTRACTOR.
2. ALL LOW VOLTAGE CABLE AND CONDUIT REQUIRED FOR BUILDING AUTOMATION SYSTEM SHALL BE THE RESPONSIBILITY OF THE CONTROLS CONTRACTOR.
3. ALL LOW VOLTAGE WIRING ABOVE CEILING SHALL BE PLENUM RATED. CONDUIT NOT REQUIRED FOR LOW VOLTAGE WIRING ABOVE CEILING.

DDC SYSTEM ARCHITECTURE

No.	DATE	REVISIONS	APPROVED

DESIGNED: TI
DRAWN: NT
CHECKED: TI

RBF CONSULTING
carollo
IRVINE RANCH WATER DISTRICT

TIM IMHOFF	RME NO. M027832	MECHANICAL ENGINEER	DATE
CINDY MILLER	RCE NO. 58116	PROJECT MANAGER	DATE
PATRICIA UEMATSU	RCE NO. 36762	PRINCIPAL ENGINEER	DATE

REGISTERED PROFESSIONAL ENGINEER TIMOTHY A. IMHOFF No. M027832 Exp. 6-30-12 MECHANICAL STATE OF CALIFORNIA

IRVINE RANCH WATER DISTRICT
BAKER WATER TREATMENT PLANT
PROJECT NO. 11218

HVAC WIRING & CONTROLS I

DRAWING H005
SHEET 402 OF 632

FILENAME: 6232-H005.dwg
LAST UPDATED: 01/19/2012 05:12 PM
LAST SAVED BY: noeltapia

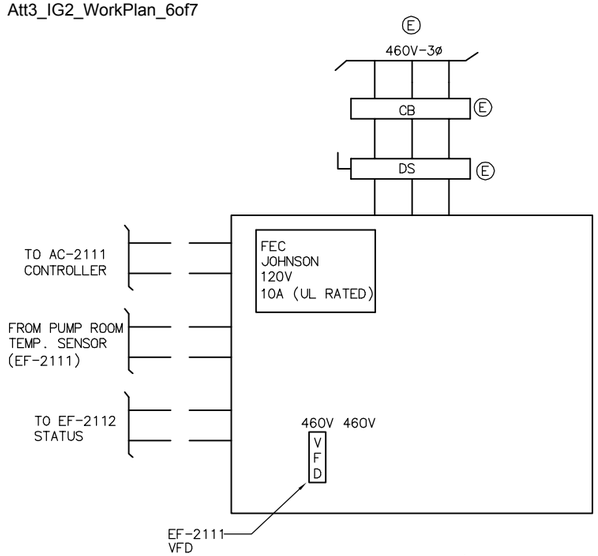

NOTE: FINAL LAYOUT W/ NECESSARY TRANSFORMERS BY CONTROLS CONTRACTOR.

TRABUCO CANYON WATER DISCTRICT PUMP STATION HVAC CONTROL PANEL

N.T.S.

1 / –

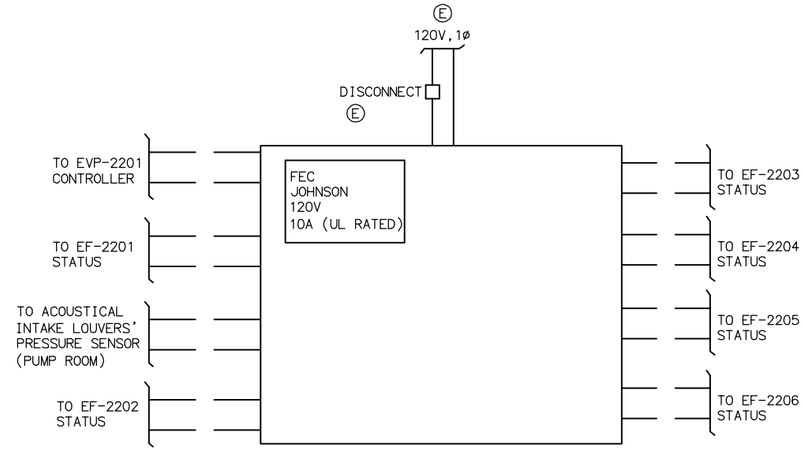

NOTE: FINAL LAYOUT W/ NECESSARY TRANSFORMERS BY CONTROLS CONTRACTOR.

FOREBAY BUILDING HVAC CONTROL PANEL

N.T.S.

2 / –

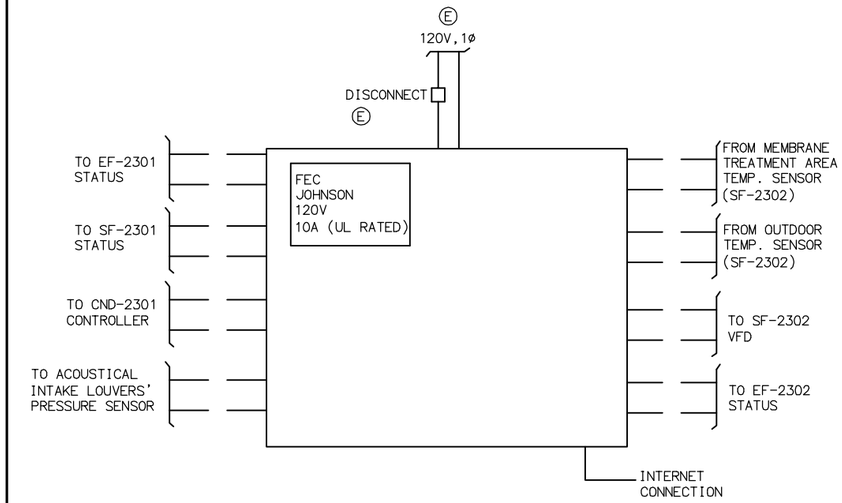

NOTE: FINAL LAYOUT W/ NECESSARY TRANSFORMERS BY CONTROLS CONTRACTOR.

TREATMENT BUILDING HVAC CONTROL PANEL

N.T.S.

3 / –

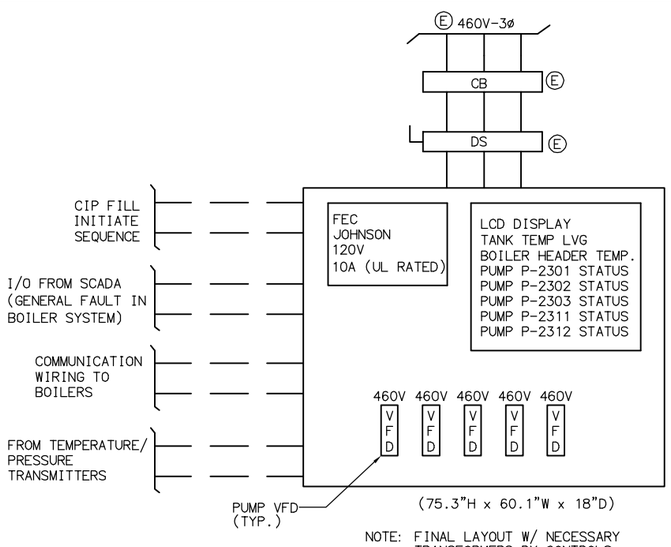

NOTE: FINAL LAYOUT W/ NECESSARY TRANSFORMERS BY CONTROLS CONTRACTOR.

TREATMENT BUILDING CIP BOILER CONTROL PANEL

N.T.S.

4 / –

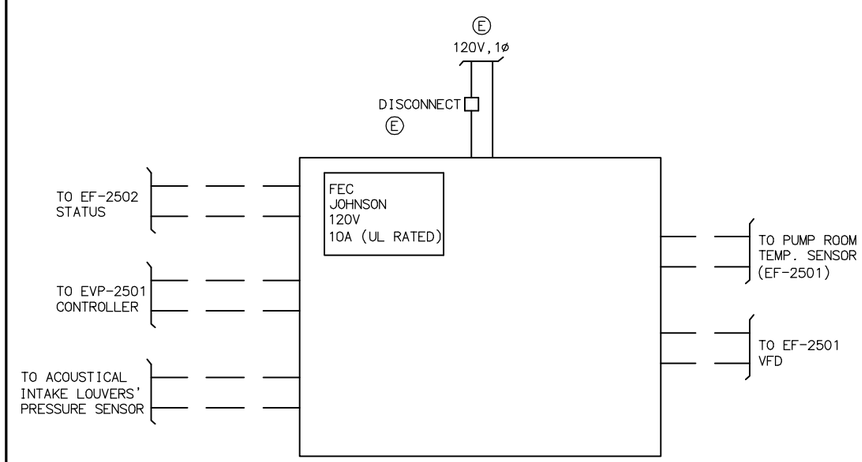

NOTE: FINAL LAYOUT W/ NECESSARY TRANSFORMERS BY CONTROLS CONTRACTOR.

PRODUCT WATER PUMP STATION HVAC CONTROL PANEL

N.T.S.

5 / –

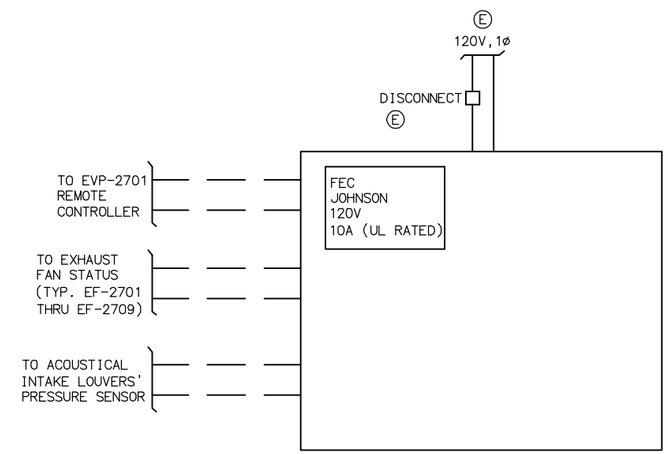

NOTE: FINAL LAYOUT W/ NECESSARY TRANSFORMERS BY CONTROLS CONTRACTOR.

CHEMICAL BUILDING HVAC CONTROL PANEL

N.T.S.

6 / –

FILENAME: 6232-H006.dwg
LAST UPDATED: 01/19/2012 06:26 PM
LAST SAVED BY: timimhoff

No.	DATE	REVISIONS	APPROVED

DESIGNED: TI
DRAWN: NT
CHECKED: TI

RBF CONSULTING

carollo

IRVINE RANCH WATER DISTRICT

TIM IMHOFF	RME NO. M027832	MECHANICAL ENGINEER	DATE
CINDY MILLER	RCE NO. 58116	PROJECT MANAGER	DATE
PATRICIA UEMATSU	RCE NO. 36762	PRINCIPAL ENGINEER	DATE

REGISTERED PROFESSIONAL ENGINEER TIMOTHY A. IMHOFF No. M027832 Exp. 6-30-12 MECHANICAL STATE OF CALIFORNIA

IRVINE RANCH WATER DISTRICT
BAKER WATER TREATMENT PLANT
PROJECT NO. 11218

HVAC WIRING & CONTROLS II

DRAWING H006

SHEET 403 OF 632

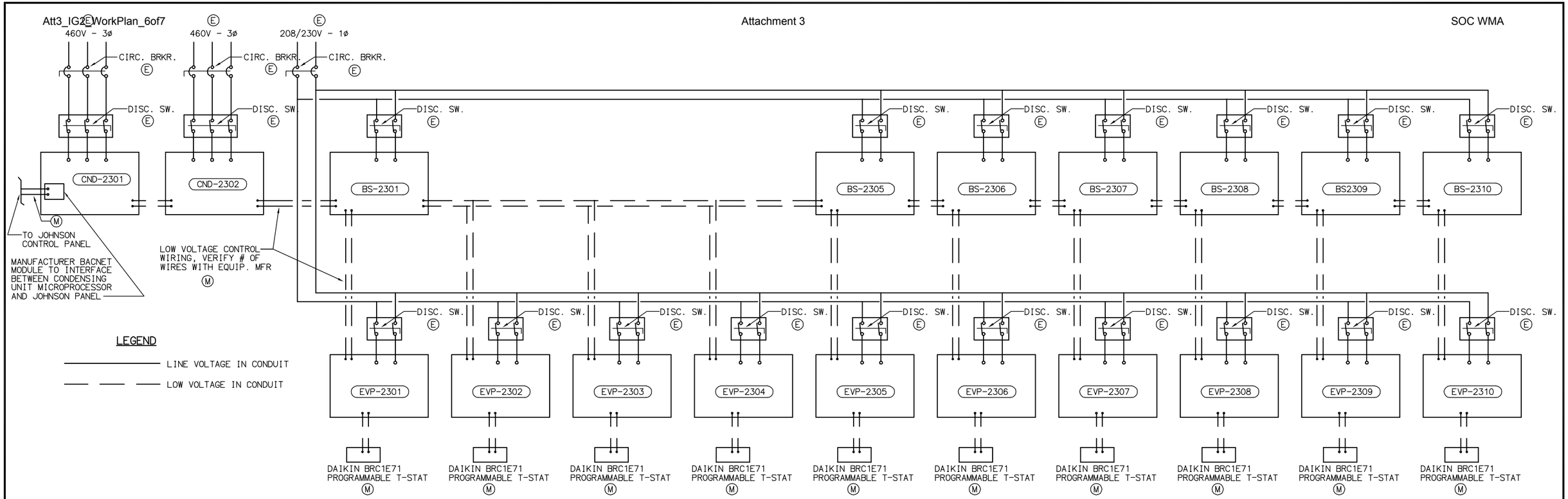

TREATMENT BUILDING DAIKIN SYSTEM WIRING

N.T.S.

1 –

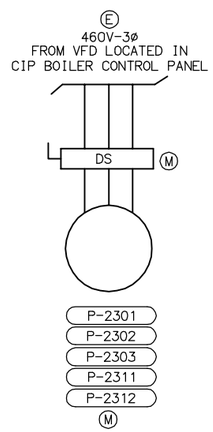

TREATMENT BUILDING BOILER SYSTEM PUMP WIRING

N.T.S.

2 –

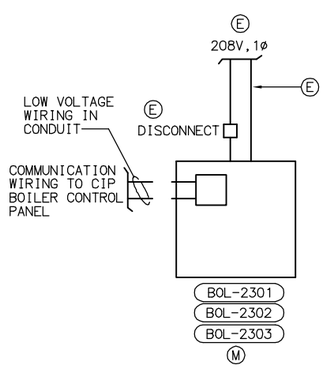

TREATMENT BUILDING BOILER WIRING

N.T.S.

3 –

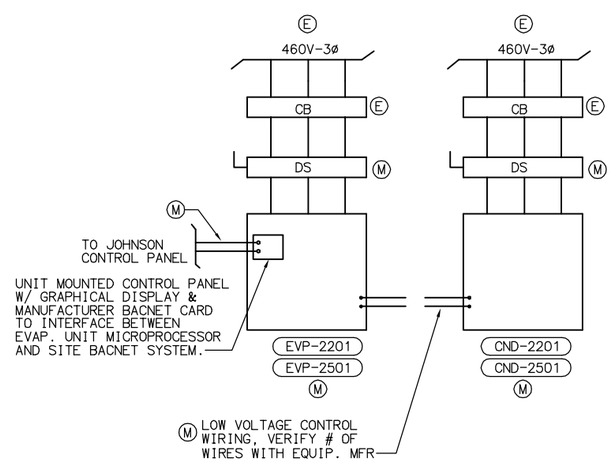

FOREBAY BUILDING AND PRODUCT WATER PUMP STATION SPLIT SYSTEM UNIT WIRING

N.T.S.

4 –

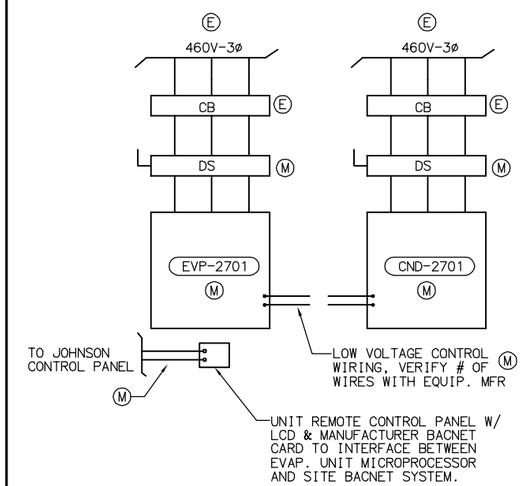

CHEMICAL BUILDING SPLIT SYSTEM UNIT WIRING

N.T.S.

5 –

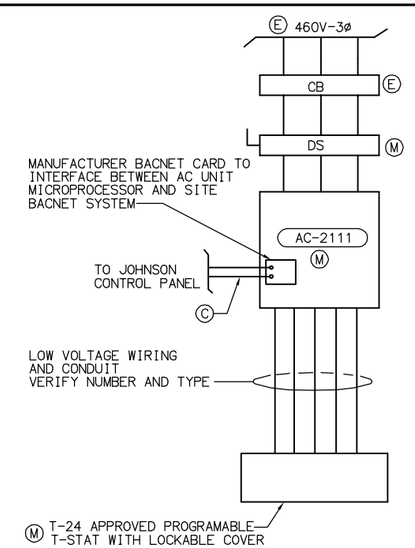

TRABUCO CANYON WATER DISTRICT PUMP STATION AC-UNIT WIRING

N.T.S.

6 –

FILENAME: 6232-H007.dwg
LAST UPDATED: 01/19/2012 05:13 PM
LAST SAVED BY: noeltapia

No.	DATE	REVISIONS	APPROVED

DESIGNED: TI
DRAWN: NT
CHECKED: TI

RBF CONSULTING

carollo

IRVINE RANCH WATER DISTRICT

TIM IMHOFF	RME NO. M027832	MECHANICAL ENGINEER	DATE
CINDY MILLER	RCE NO. 58116	PROJECT MANAGER	DATE
PATRICIA UEMATSU	RCE NO. 36762	PRINCIPAL ENGINEER	DATE

REGISTERED PROFESSIONAL ENGINEER TIMOTHY A. IMHOFF No. M027832 Exp. 6-30-12 MECHANICAL STATE OF CALIFORNIA

IRVINE RANCH WATER DISTRICT
BAKER WATER TREATMENT PLANT
PROJECT NO. 11218

HVAC WIRING & CONTROLS III

DRAWING H007

SHEET 404 OF 632

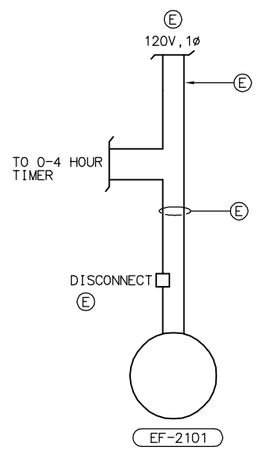

FLOW CONTROL FACILITY EXHAUST FAN WIRING

N.T.S.

1 / –

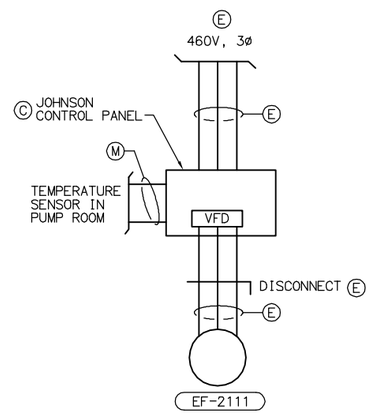

TRABUCO CANYON WATER DISTRICT PUMP STATION - PUMP ROOM EXHAUST FAN WIRING

N.T.S.

2 / –

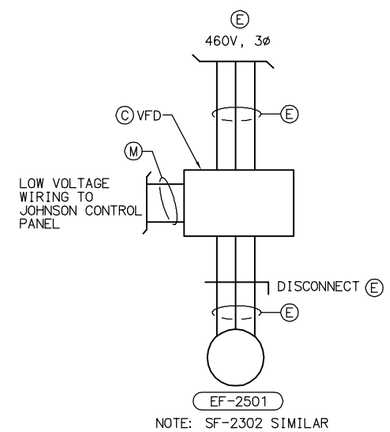

SUPPLY / EXHAUST FAN WIRING

N.T.S.

3 / –

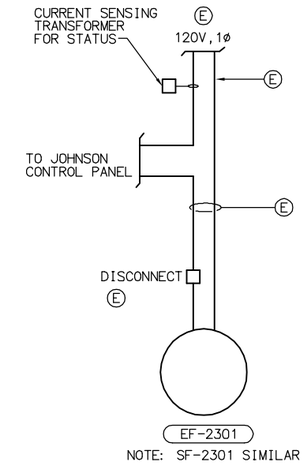

TREATMENT BUILDING FAN WIRING

N.T.S.

4 / –

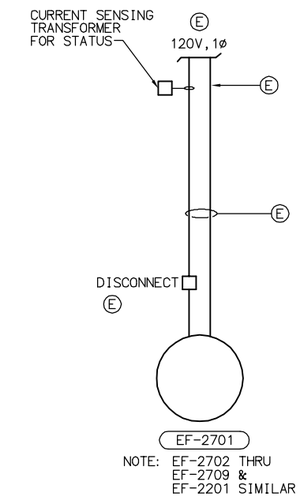

EXHAUST FAN WIRING

N.T.S.

5 / –

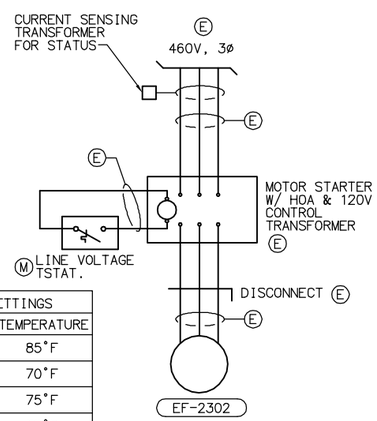

TEMP. SETTINGS	
FAN	TEMPERATURE
EF-2203	85°F
EF-2204	70°F
EF-2205	75°F
EF-2206	80°F
EF-2302	75°F

EXHAUST FAN WIRING

N.T.S.

6 / –

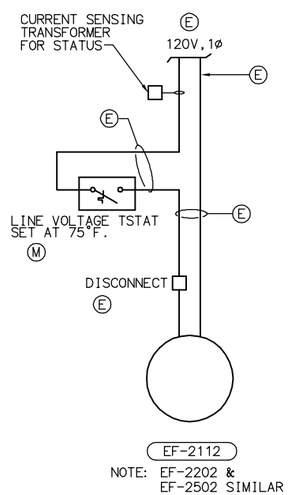

VFD EXHAUST HOOD EXHAUST FAN WIRING

N.T.S.

7 / –

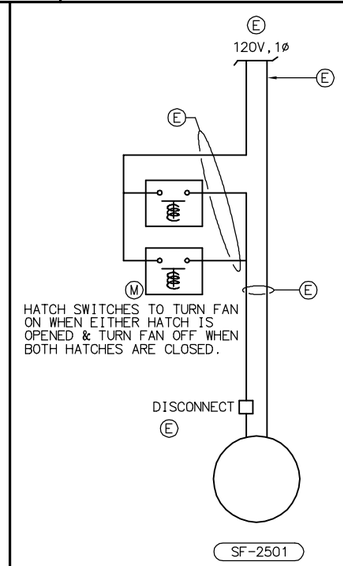

VAULT FAN WIRING

N.T.S.

8 / –

LAST SAVED BY: rceltapia LAST UPDATED: 01/19/2012 05:23 PM FILENAME: 6232-H008.dwg

No.	DATE	REVISIONS	APPROVED

DESIGNED: TI
DRAWN: NT
CHECKED: TI

RBF CONSULTING

carollo

IRVINE RANCH WATER DISTRICT

TIM IMHOFF	RME NO. M027832	MECHANICAL ENGINEER	DATE
CINDY MILLER	RCE NO. 58116	PROJECT MANAGER	DATE
PATRICIA UEMATSU	RCE NO. 36762	PRINCIPAL ENGINEER	DATE

REGISTERED PROFESSIONAL ENGINEER TIMOTHY A. IMHOFF No. M027832 Exp. 6-30-12 MECHANICAL STATE OF CALIFORNIA

IRVINE RANCH WATER DISTRICT
BAKER WATER TREATMENT PLANT
PROJECT NO. 11218

HVAC CONTROLS IV

DRAWING H008

SHEET 405 OF 632

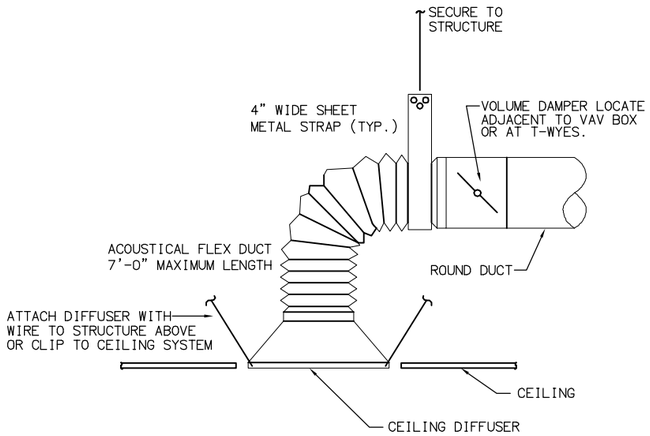

NOTE: 1) RA,EA AND TG SIMILAR

2) PROVIDE LINED PLENUM WITH SIDE DUCT CONNECTION FOR AREAS WITH RESTRICTED CLEARANCE.

3) SEE GENERAL MECHANICAL NOTES FOR FURTHER INSTALLATION REQUIREMENTS.

4) DUCT SUPPORT SHALL BE INSTALLED MIN. ONE DUCT DIAMETER FROM BEND.

DIFFUSER DETAIL 1/–
N.T.S.

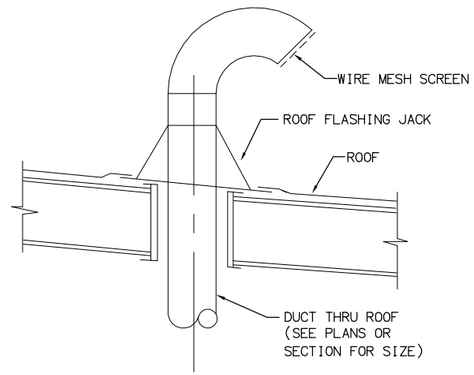

DUCT UTR W/ GOOSENECK 2/–
N.T.S.

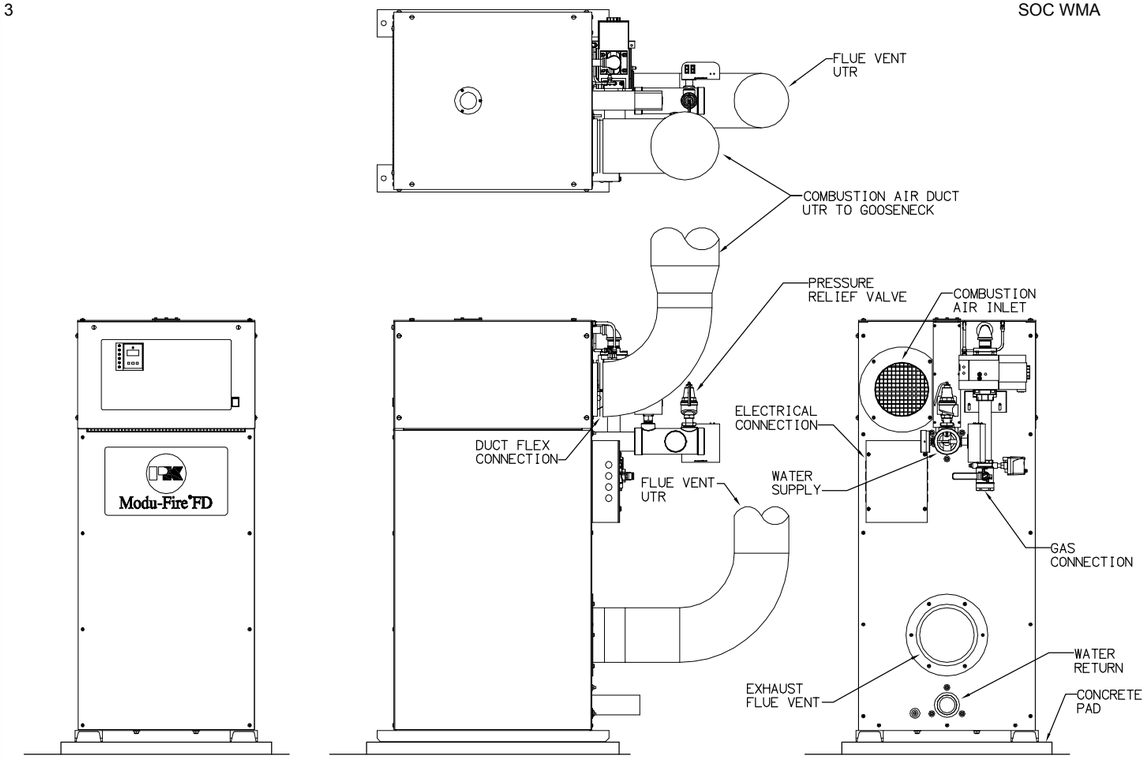

BOILER DETAIL 3/–
N.T.S.

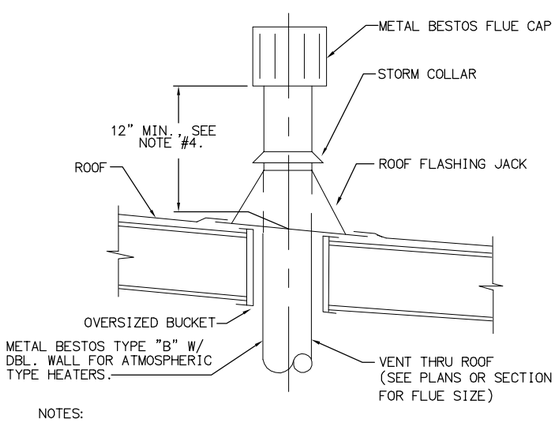

NOTES:

1. PROVIDE 2" CLEAR DIA. ALL COMBUSTIBLE SURFACES.
2. CAP, JACK AND COLLAR SECURED W/4 SHEET METAL SCREWS.
3. ALL PARTS TO BE BY SAME MANUFACTURER.
4. FLUE PENETRATION OF ROOF SHALL BE A MINIMUM OF 96" AWAY OR 24" ABOVE PARAPET.

FLUE THRU ROOF 4/–
N.T.S.

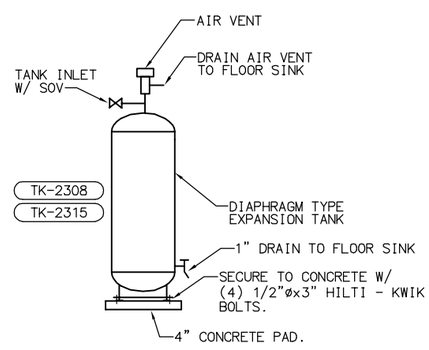

EXPANSION TANK 5/–
N.T.S.

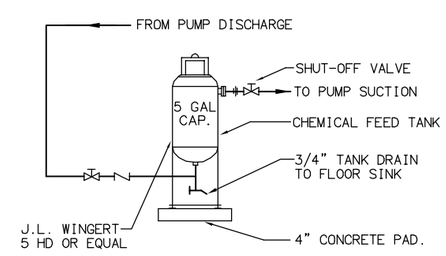

CHEMICAL FEED TANK 6/–
N.T.S.

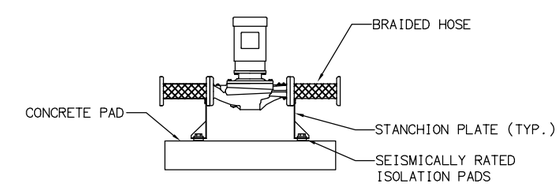

TYPICAL PUMP MOUNTING 7/–
N.T.S.

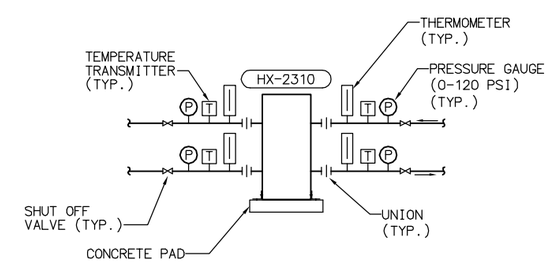

HEAT EXCHANGER DETAIL 8/–
N.T.S.

FILENAME: 6232-H009.dwg
LAST UPDATED: 01/19/2012 05:29 PM
LAST SAVED BY: noeltapia

No.	DATE	REVISIONS	APPROVED

DESIGNED: TI
DRAWN: NT
CHECKED: TI

RBF CONSULTING

carollo

IRVINE RANCH WATER DISTRICT

TIM IMHOFF	RME NO. M027832	MECHANICAL ENGINEER	DATE
CINDY MILLER	RCE NO. 58116	PROJECT MANAGER	DATE
PATRICIA UEMATSU	RCE NO. 36762	PRINCIPAL ENGINEER	DATE

REGISTERED PROFESSIONAL ENGINEER TIMOTHY A. IMHOFF No. M027832 Exp. 6-30-12 MECHANICAL STATE OF CALIFORNIA

IRVINE RANCH WATER DISTRICT
BAKER WATER TREATMENT PLANT
PROJECT NO. 11218

HVAC DETAILS I

DRAWING **H009**

SHEET **406** OF **632**

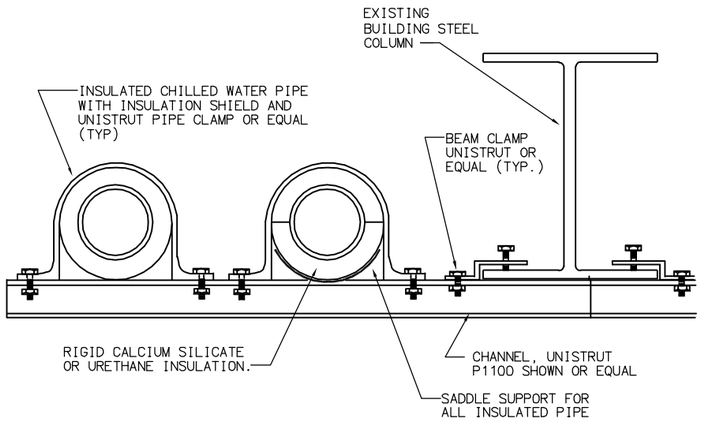

PLAN VIEW

VERTICAL PIPE SUPPORT

N.T.S.

1 / –

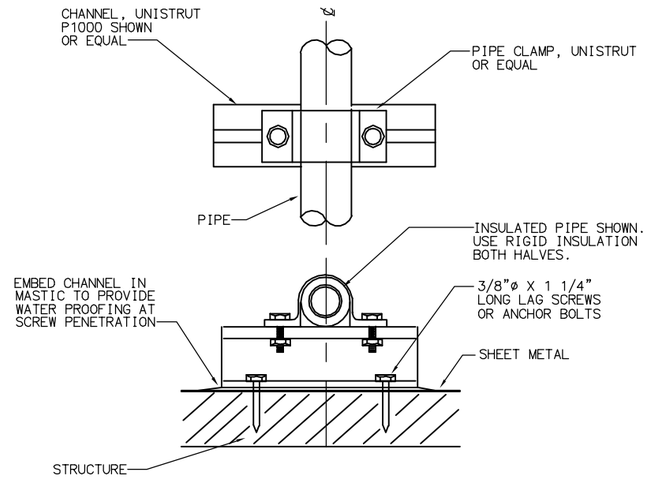

SINGLE PIPE SUPPORT DETAIL

N.T.S.

2 / –

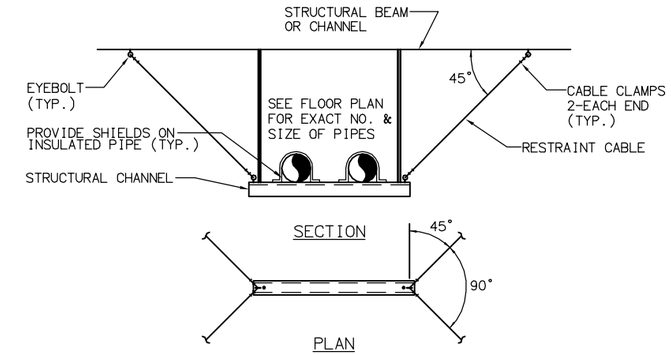

NOTES:

1. TIGHTEN CABLES AFTER PIPNG HAS BEEN FILLED .
2. PROVIDE SEISMIC BRACING CABLES AT EVERY SIXTH HANGER .

TRAPEZE HANGER SUPPORT FOR PIPE

N.T.S.

3 / –

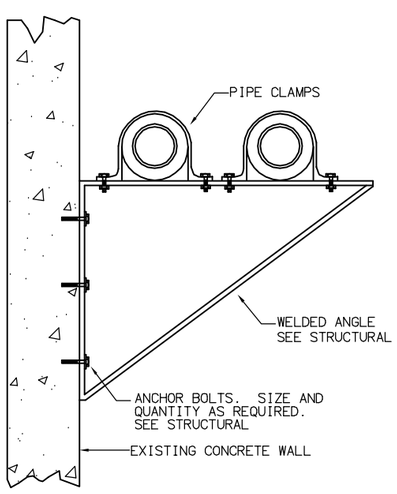

PIPE WALL SUPPORT

N.T.S.

4 / –

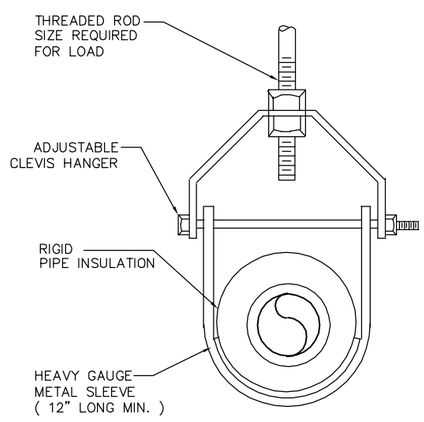

PIPE HANGER DETAIL

N.T.S.

5 / –

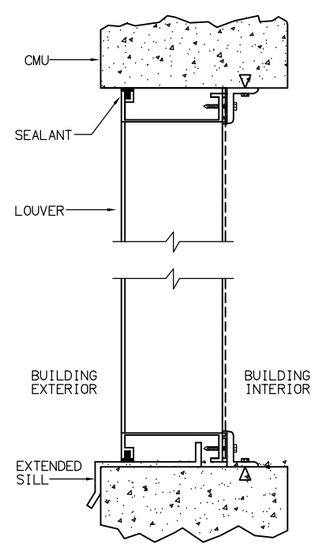

LOUVER DETAIL

N.T.S.

6 / –

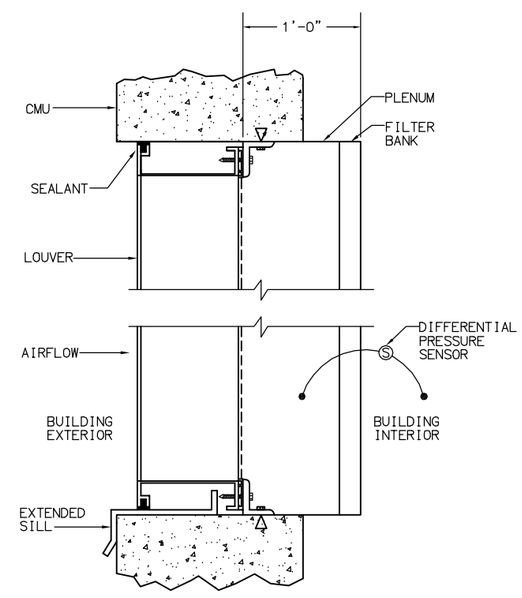

INTAKE LOUVER DETAIL

N.T.S.

7 / –

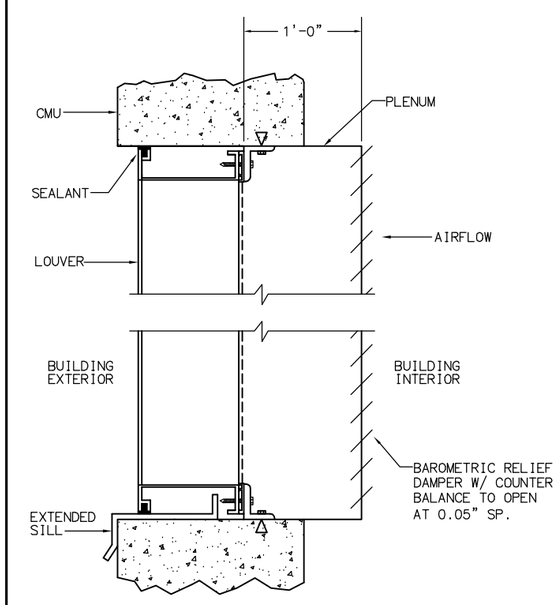

BAROMETRIC RELIEF LOUVER DETAIL

N.T.S.

8 / –

LAST SAVED BY: noeltapia LAST UPDATED: 01/19/2012 05:30 PM FILENAME: 6232-H010.dwg

No.	DATE	REVISIONS	APPROVED

DESIGNED: TI
DRAWN: NT
CHECKED: TI

RBF CONSULTING

carollo

IRVINE RANCH WATER DISTRICT

TIM IMHOFF	RME NO. M027832	MECHANICAL ENGINEER	DATE
CINDY MILLER	RCE NO. 58116	PROJECT MANAGER	DATE
PATRICIA UEMATSU	RCE NO. 36762	PRINCIPAL ENGINEER	DATE

REGISTERED PROFESSIONAL ENGINEER TIMOTHY A. IMHOFF No. M027832 Exp. 6-30-12 MECHANICAL STATE OF CALIFORNIA

IRVINE RANCH WATER DISTRICT
BAKER WATER TREATMENT PLANT
PROJECT NO. 11218

HVAC DETAILS II

DRAWING **H010**

SHEET **407** OF **632**

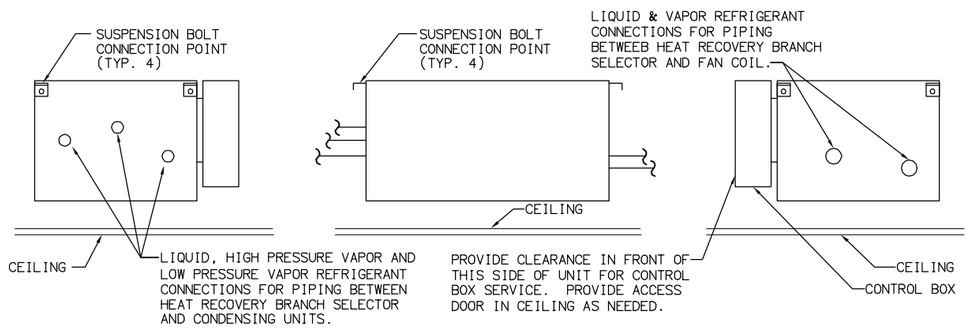

VRV HEAT RECOVERY BRANCH SELECTOR DETAIL (1/–)

N.T.S.

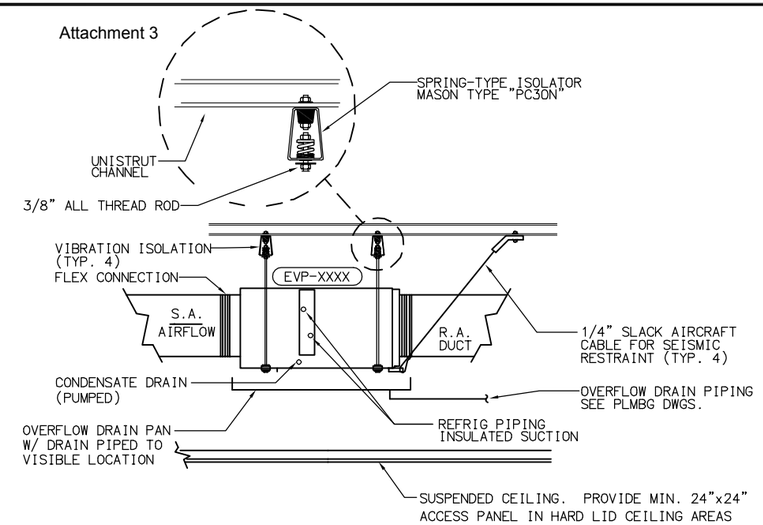

NOTES:

1. PROVIDE ACCESS CLEARANCE AS REQUIRED BY MANUFACTURER.
2. PROVIDE RESTRAINT PER SMACNA REQUIREMENTS.
3. COORDINATE STRUCTURAL SUPPORT W/ ARCHITECT.
4. EXTEND OVERFLOW DRAIN PAN FAR ENOUGH TO INCLUDE ENCOMPASING OF CONDENSATE PUMP. COORDINATE W/ PLUMBING.

TREATMENT BUILDING DUCTED FAN COIL UNIT (2/–)

N.T.S.

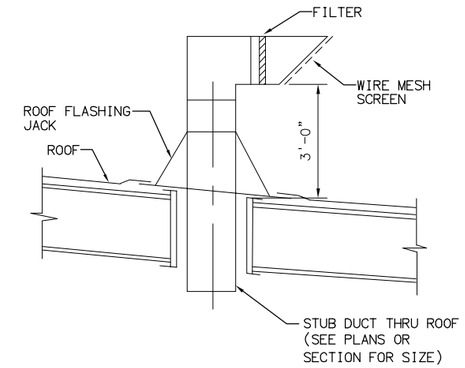

FILTERED ROOF INLET DETAIL (3/–)

N.T.S.

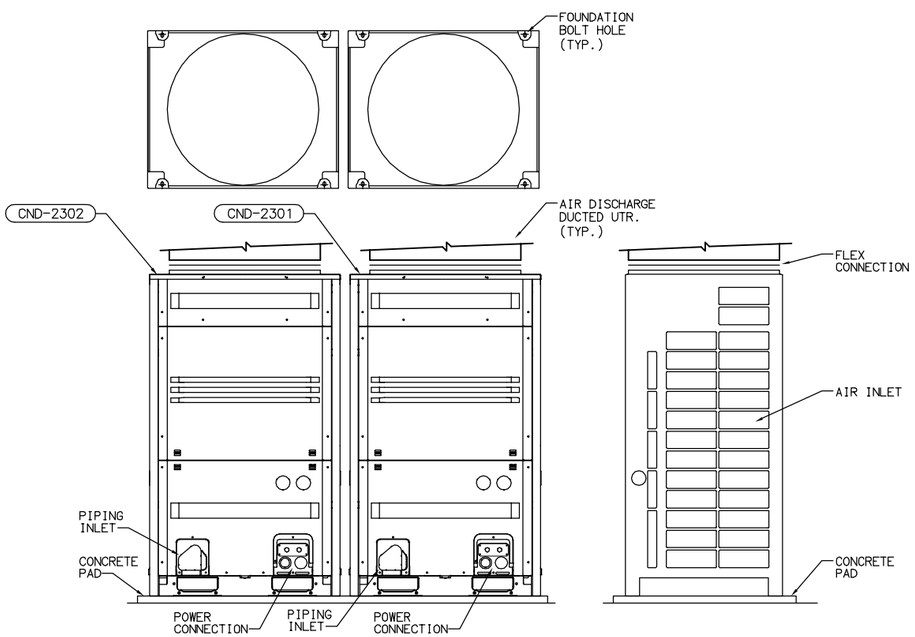

VRV SYSTEM CONDENSING UNIT DETAIL (4/–)

N.T.S.

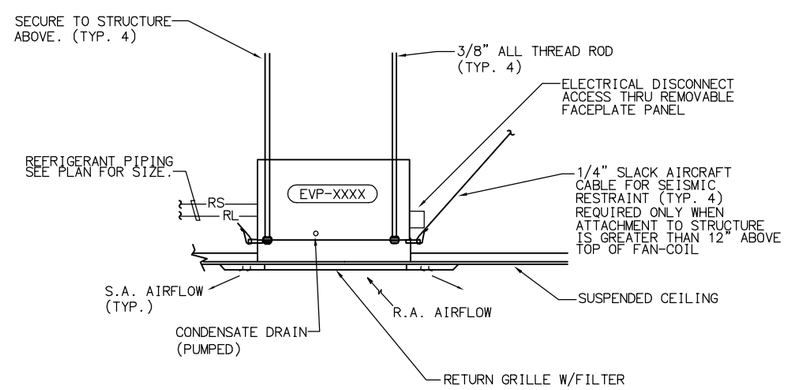

NOTES:

1. PROVIDE ACCESS AS REQUIRED BY MFR.
2. PROVIDE RESTRAINT PER SMACNA REQUIREMENTS.
3. COORDINATE STRUCTURAL SUPPORT W/ ARCHITECT.

TREATMENT BUILDING DUCTLESS FAN COIL UNIT (5/–)

N.T.S.

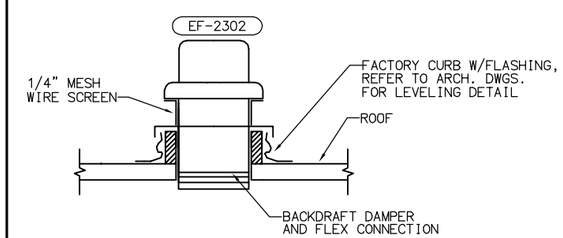

ROOF MOUNTED EXHAUST FAN (6/–)

N.T.S.

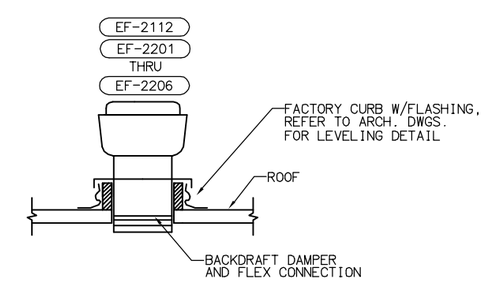

ROOF MOUNTED EXHAUST FAN (7/–)

N.T.S.

No.	DATE	REVISIONS	APPROVED

DESIGNED: TI
DRAWN: NT
CHECKED: TI

RBF CONSULTING

carollo

IRVINE RANCH WATER DISTRICT

TIM IMHOFF	RME NO. M027832	MECHANICAL ENGINEER	DATE
CINDY MILLER	RCE NO. 58116	PROJECT MANAGER	DATE
PATRICIA UEMATSU	RCE NO. 36762	PRINCIPAL ENGINEER	DATE

REGISTERED PROFESSIONAL ENGINEER — TIMOTHY A. IMHOFF — No. M027832 — Exp. 6-30-12 — MECHANICAL — STATE OF CALIFORNIA

IRVINE RANCH WATER DISTRICT
BAKER WATER TREATMENT PLANT
PROJECT NO. 11218

HVAC DETAILS III

DRAWING H011

SHEET 408 OF 632

FILENAME: 6232-H011.dwg
LAST UPDATED: 01/19/2012 05:32 PM
LAST SAVED BY: noeltapia

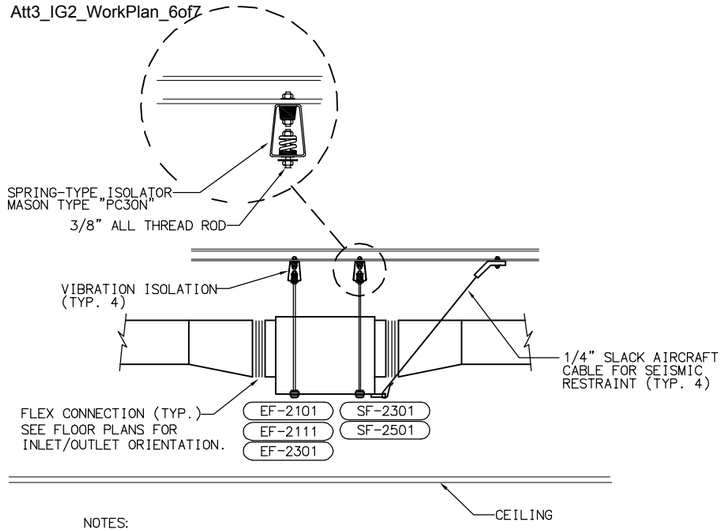

NOTES:

1. PROVIDE ACCESS CLEARANCE AS REQUIRED BY MANUFACTURER.
2. PROVIDE RESTRAINT PER SMACNA REQUIREMENTS.
3. COORDINATE STRUCTURAL SUPPORT W/ ARCHITECT.

INLINE FAN DETAIL (1 / –)

N.T.S.

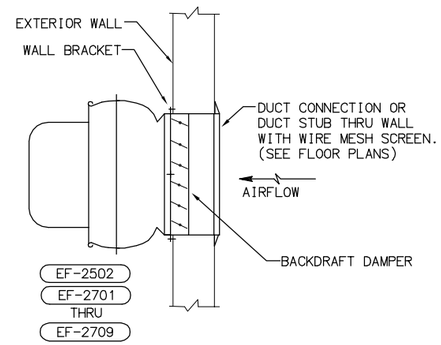

WALL MOUNTED EXHAUST FAN (2 / –)

N.T.S.

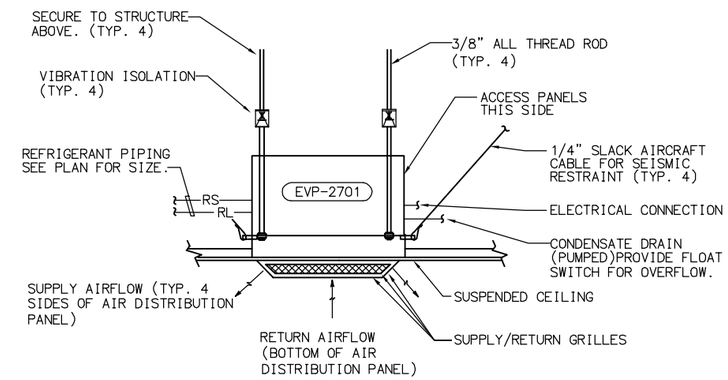

NOTES:

1. PROVIDE ACCESS AS REQUIRED BY MFR.
2. PROVIDE RESTRAINT PER SMACNA REQUIREMENTS.
3. COORDINATE STRUCTURAL SUPPORT W/ ARCHITECT.

CHEMICAL BUILDING FAN COIL DETAIL (3 / –)

N.T.S.

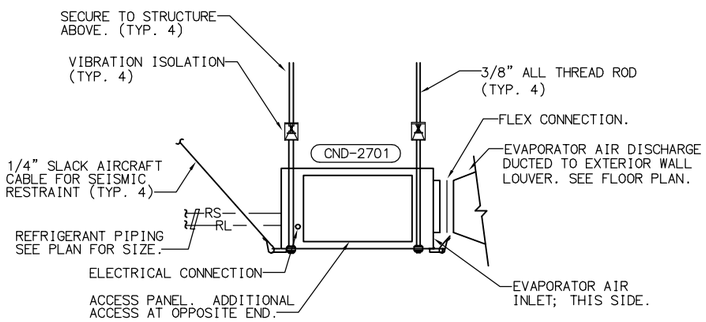

NOTES:

1. PROVIDE ACCESS AS REQUIRED BY MFR.
2. PROVIDE RESTRAINT PER SMACNA REQUIREMENTS.
3. COORDINATE STRUCTURAL SUPPORT W/ ARCHITECT.

CHEMICAL BUILDING CONDENSING UNIT DETAIL (4 / –)

N.T.S.

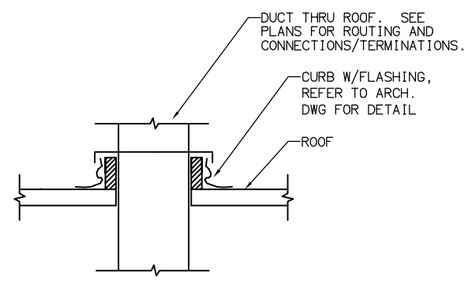

DUCT THRU ROOF (5 / –)

N.T.S.

LAST SAVED BY: noeltapia LAST UPDATED: 01/19/2012 05:33 PM FILENAME: 6232-H012.dwg

No.	DATE	REVISIONS	APPROVED

DESIGNED: TI
DRAWN: NT
CHECKED: TI

RBF CONSULTING

carollo

IRVINE RANCH WATER DISTRICT

TIM IMHOFF	RME NO. M027832	MECHANICAL ENGINEER	DATE
CINDY MILLER	RCE NO. 58116	PROJECT MANAGER	DATE
PATRICIA UEMATSU	RCE NO. 36762	PRINCIPAL ENGINEER	DATE

REGISTERED PROFESSIONAL ENGINEER TIMOTHY A. IMHOFF No. M027832 Exp. 6-30-12 MECHANICAL STATE OF CALIFORNIA

IRVINE RANCH WATER DISTRICT
BAKER WATER TREATMENT PLANT
PROJECT NO. 11218

HVAC DETAILS IV

DRAWING H012

SHEET 409 OF 632

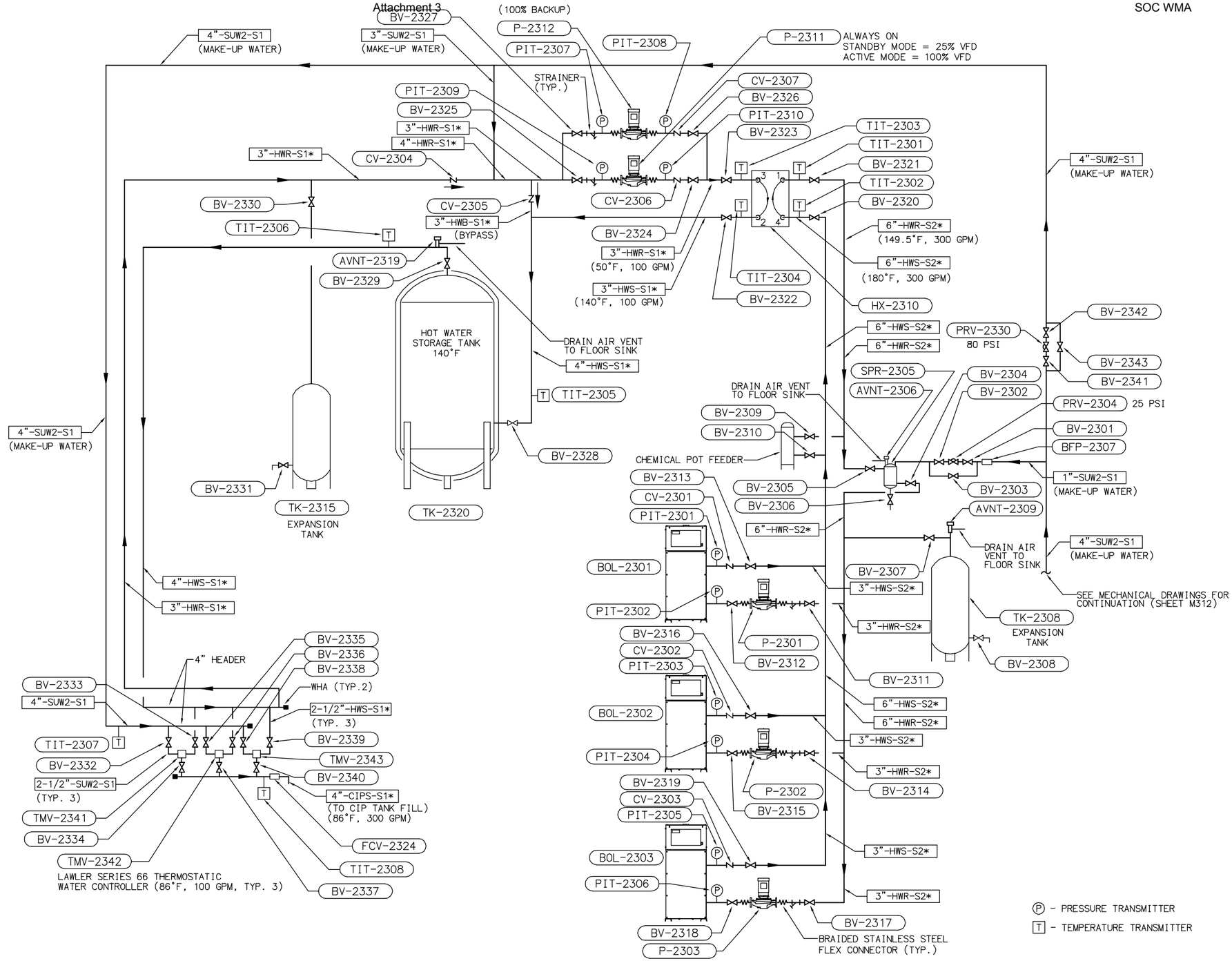

TREATMENT BUILDING - BOILER ROOM PIPING DIAGRAM

No.	DATE	REVISIONS	APPROVED

DESIGNED: TI
DRAWN: NT
CHECKED: TI

RBF CONSULTING

carollo

IRVINE RANCH WATER DISTRICT

TIM IMHOFF	RME NO. M027832	MECHANICAL ENGINEER	DATE
CINDY MILLER	RCE NO. 58116	PROJECT MANAGER	DATE
PATRICIA UEMATSU	RCE NO. 36762	PRINCIPAL ENGINEER	DATE

REGISTERED PROFESSIONAL ENGINEER TIMOTHY A. IMHOFF No. M027832 Exp. 6-30-12 MECHANICAL STATE OF CALIFORNIA

IRVINE RANCH WATER DISTRICT
BAKER WATER TREATMENT PLANT
PROJECT NO. 11218

HVAC PIPING DIAGRAM

DRAWING
H013
SHEET
410 OF **632**

FILENAME: 6232-H013.dwg
LAST UPDATED: 01/19/2012 05:34 PM
LAST SAVED BY: noeltapia

KEY NOTES

1. IAC SLIMSHIELD 6" DEEP LOUVER.

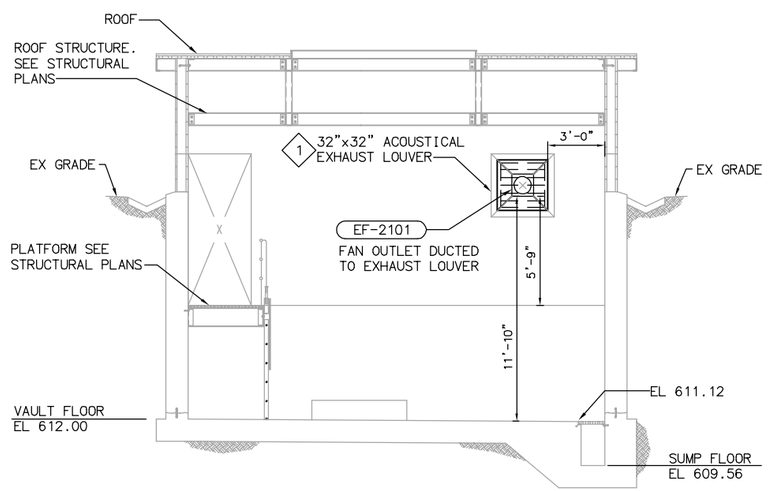

SECTION A H101
SCALE: 1/4"=1'-0"

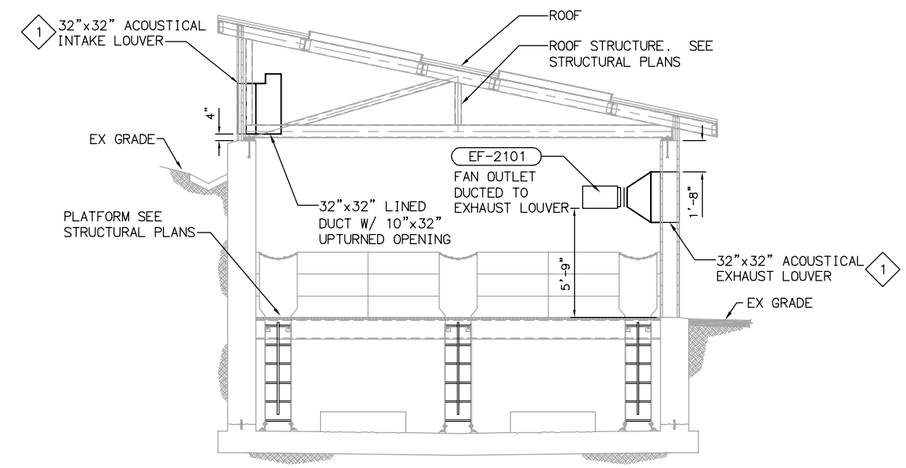

SECTION B H101
SCALE: 1/4"=1'-0"

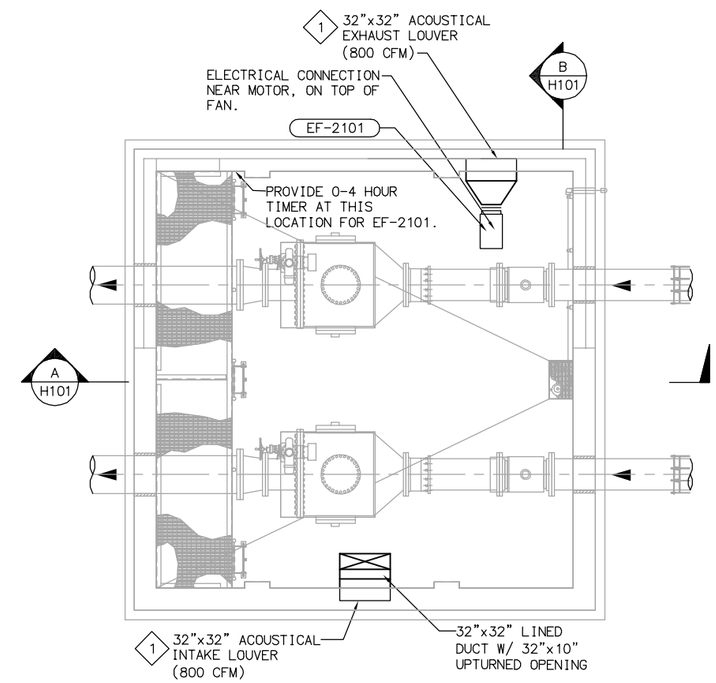

PLAN
SCALE: 1/4"=1'-0"

EQUIPMENT TAG NUMBERS ON THIS DRAWING ARE PRECEDED W/ 01-HVAC- UNLESS OTHERWISE LABELED

No.	DATE	REVISIONS	APPROVED

DESIGNED: TI
DRAWN: NT
CHECKED: TI

RBF CONSULTING

carollo

IRVINE RANCH WATER DISTRICT

TIM IMHOFF	RME NO. M027832	MECHANICAL ENGINEER	DATE
CINDY MILLER	RCE NO. 58116	PROJECT MANAGER	DATE
PATRICIA UEMATSU	RCE NO. 36762	PRINCIPAL ENGINEER	DATE

REGISTERED PROFESSIONAL ENGINEER TIMOTHY A. IMHOFF No. M027832 Exp. 6-30-12 MECHANICAL STATE OF CALIFORNIA

IRVINE RANCH WATER DISTRICT
BAKER WATER TREATMENT PLANT
PROJECT NO. 11218

FLOW CONTROL FACILITY VENTILATION PLAN, AND SECTION

DRAWING **H101**
SHEET **411** OF **632**

FILENAME: 6232-H101.dwg
LAST UPDATED: 01/19/2012 05:55 PM
LAST SAVED BY: nceltapia

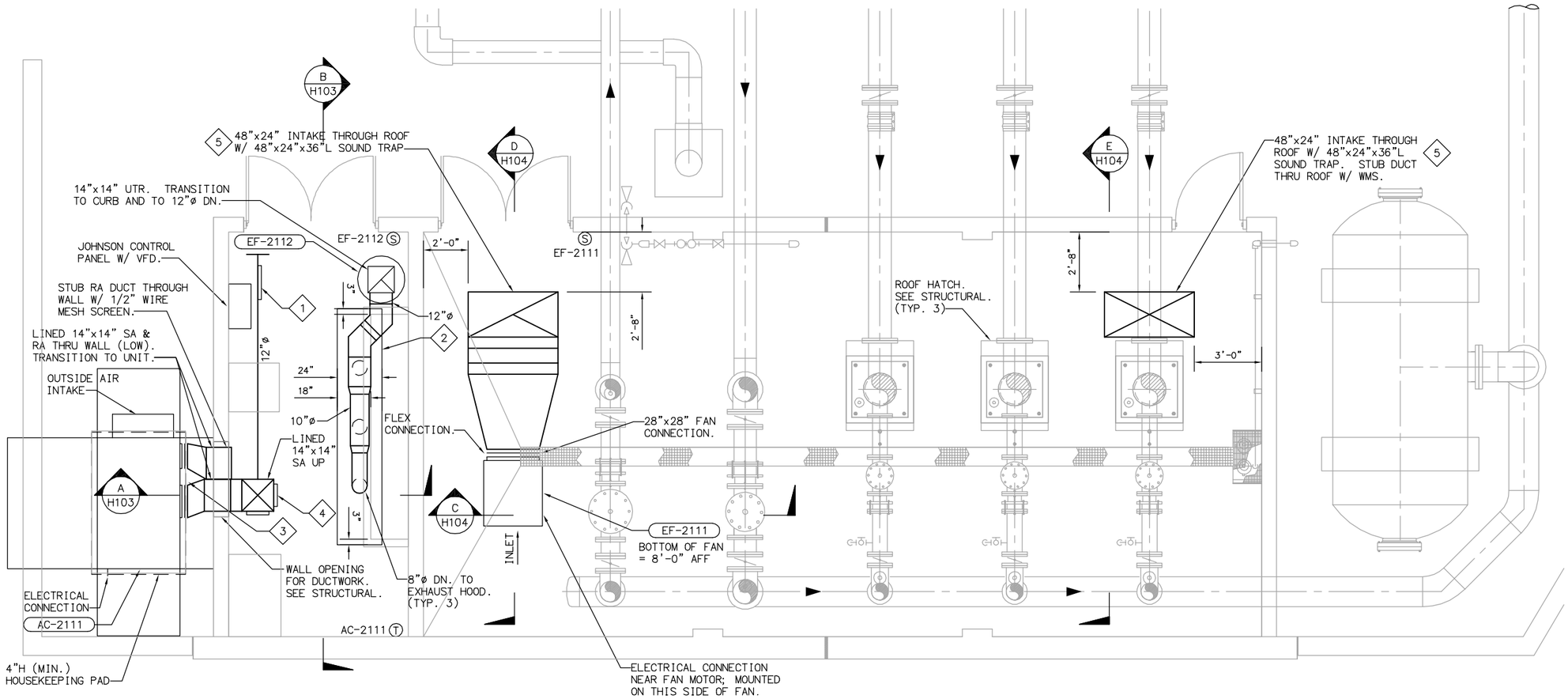

PLAN

SCALE: 3/8" = 1'-0"

KEY NOTES

1. SA - 600 CFM. KRUEGER MODEL DMGDR SUPPLY GRILLE. 30"W x 8"H.
2. SHEET METAL FABRICATED EXHAUST HOOD BY MECHANICAL CONTRACTOR FOR VFD'S. BOTTOM OF HOOD TO BE 6" ABOVE TOP OF ELECTRICAL EQUIPMENT.
3. 3/4" CONDENSATE CONNECTION. (3 TON)
4. SA - 300 CFM. KRUEGER MODEL 880 SUPPLY GRILLE. 10"x10". (TYP. 2)
5. IAC MODEL HLFM 3' LONG SOUND TRAP

EQUIPMENT TAG NUMBERS ON THIS DRAWING ARE PRECEDED W/ 01-HVAC- UNLESS OTHERWISE LABELED

No.	DATE	REVISIONS	APPROVED

DESIGNED: TI
DRAWN: NT
CHECKED: TI

RBF CONSULTING

carollo

IRVINE RANCH WATER DISTRICT

TIM IMHOFF	RME NO. M027832	MECHANICAL ENGINEER	DATE
CINDY MILLER	RCE NO. 58116	PROJECT MANAGER	DATE
PATRICIA UEMATSU	RCE NO. 36762	PRINCIPAL ENGINEER	DATE

REGISTERED PROFESSIONAL ENGINEER TIMOTHY A. IMHOFF No. M027832 Exp. 6-30-12 MECHANICAL STATE OF CALIFORNIA

IRVINE RANCH WATER DISTRICT
BAKER WATER TREATMENT PLANT
PROJECT NO. 11218

TRABUCO CANYON
WATER DISTRICT PUMP STATION-
HVAC PLAN

DRAWING H102

SHEET 412 OF 632

FILENAME: 6232-H102.dwg
LAST UPDATED: 01/19/2012 06:04 PM
LAST SAVED BY: noeltapia

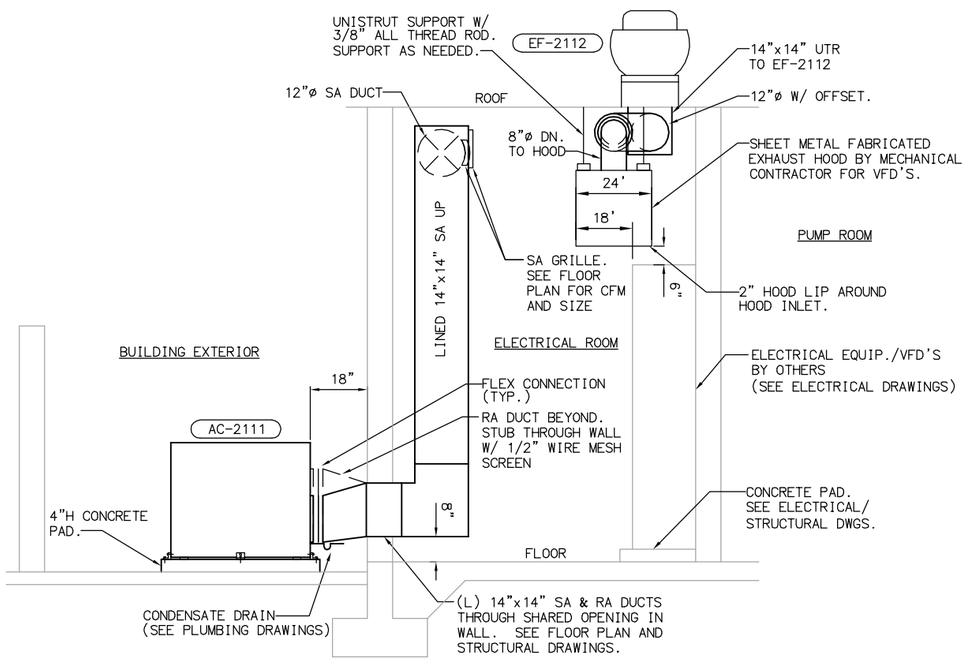

SECTION A / H102
SCALE: 1/2" = 1'-0"

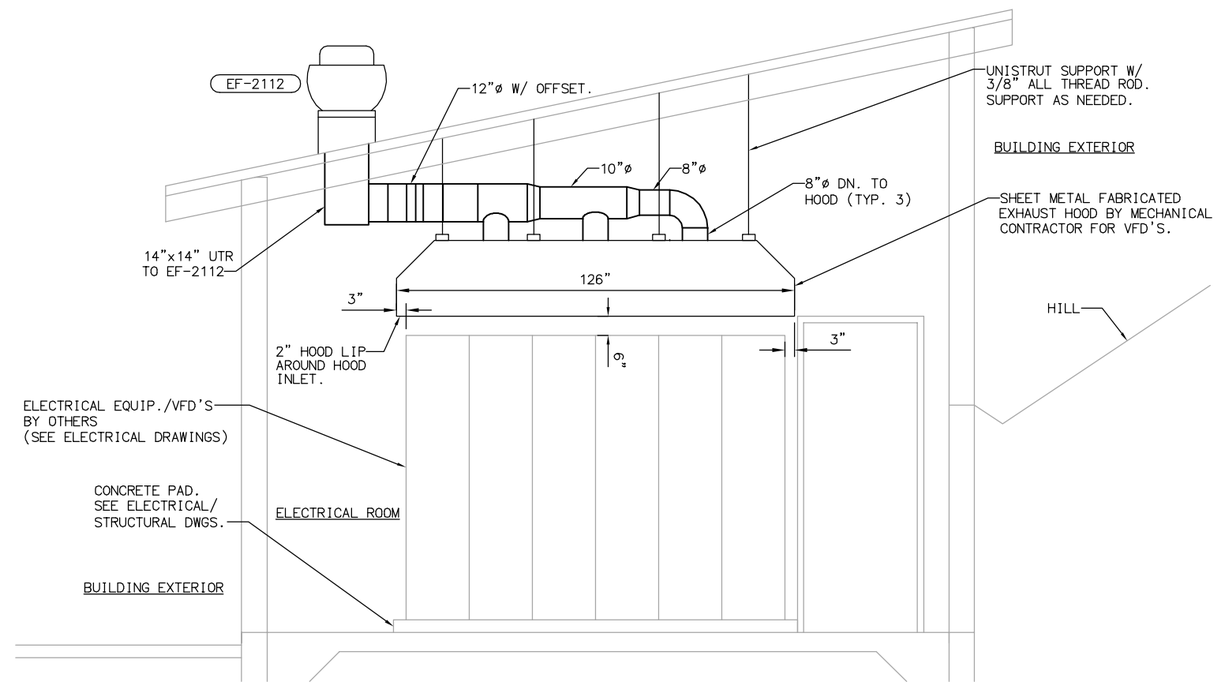

SECTION B / H102
SCALE: 1/2" = 1'-0"

EQUIPMENT TAG NUMBERS ON THIS DRAWING ARE PRECEDED W/ 01-HVAC- UNLESS OTHERWISE LABELED

No.	DATE	REVISIONS	APPROVED

DESIGNED: TI
DRAWN: NT
CHECKED: TI

RBF CONSULTING

carollo

IRVINE RANCH WATER DISTRICT

TIM IMHOFF	RME NO. M027832	MECHANICAL ENGINEER	DATE
CINDY MILLER	RCE NO. 58116	PROJECT MANAGER	DATE
PATRICIA UEMATSU	RCE NO. 36762	PRINCIPAL ENGINEER	DATE

REGISTERED PROFESSIONAL ENGINEER TIMOTHY A. IMHOFF No. M027832 Exp. 6-30-12 MECHANICAL STATE OF CALIFORNIA

IRVINE RANCH WATER DISTRICT
BAKER WATER TREATMENT PLANT
PROJECT NO. 11218

TRABUCO CANYON WATER DISTRICT
PUMP STATION - SECTIONS I

DRAWING **H103**
SHEET **4X3** OF **632**

LAST SAVED BY: noeltapia LAST UPDATED: 01/19/2012 05:57 PM FILENAME: 6232-H103.dwg

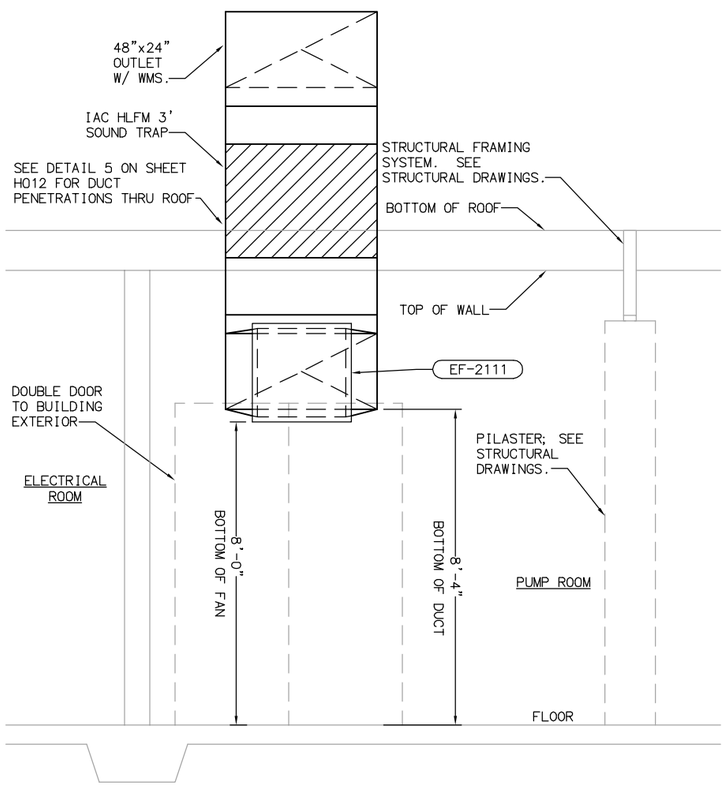

SECTION C / H102
SCALE: 1/2" = 1'-0"

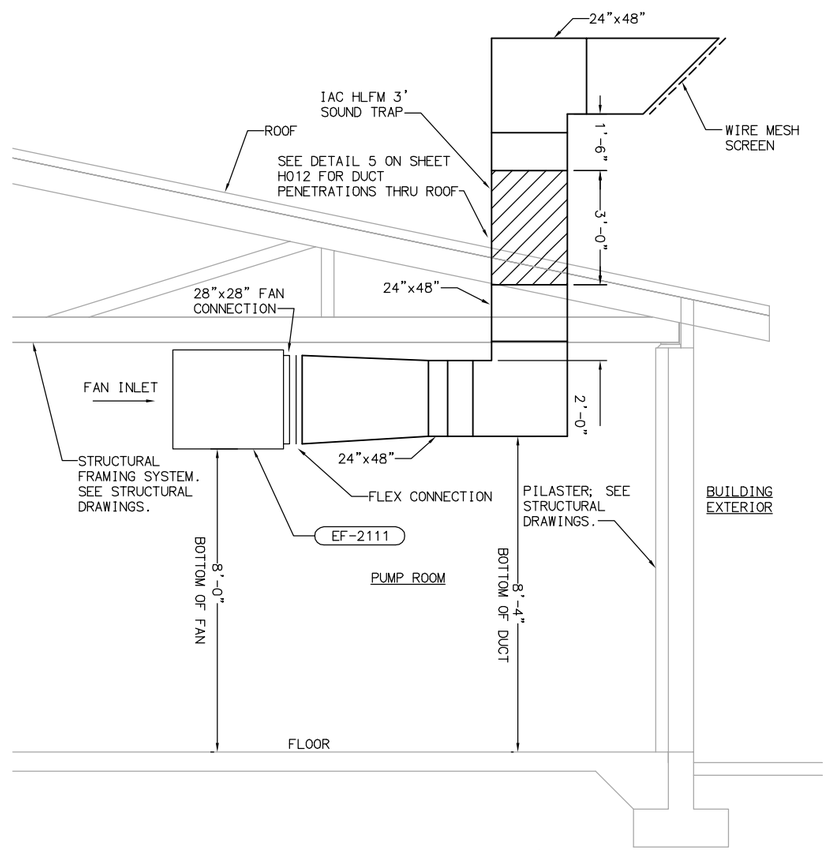

SECTION D / H102
SCALE: 1/2" = 1'-0"

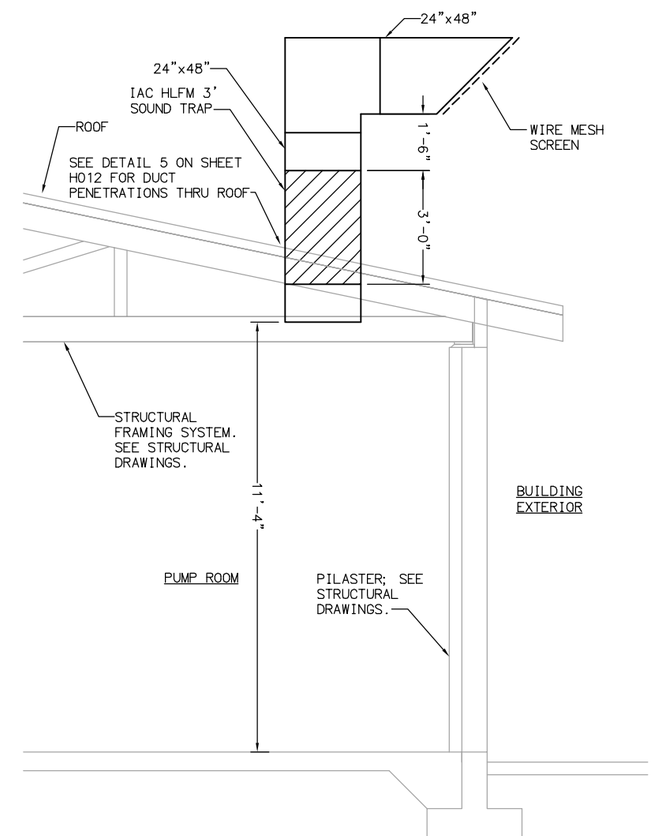

SECTION E / H102
SCALE: 1/2" = 1'-0"

EQUIPMENT TAG NUMBERS ON THIS DRAWING ARE PRECEDED W/ 01-HVAC- UNLESS OTHERWISE LABELED

No.	DATE	REVISIONS	APPROVED

DESIGNED: TI
DRAWN: NT
CHECKED: TI

RBF CONSULTING

carollo

IRVINE RANCH WATER DISTRICT

TIM IMHOFF	RME NO. M027832	MECHANICAL ENGINEER	DATE
CINDY MILLER	RCE NO. 58116	PROJECT MANAGER	DATE
PATRICIA UEMATSU	RCE NO. 36762	PRINCIPAL ENGINEER	DATE

REGISTERED PROFESSIONAL ENGINEER TIMOTHY A. IMHOFF No. M027832 Exp. 6-30-12 MECHANICAL STATE OF CALIFORNIA

IRVINE RANCH WATER DISTRICT
BAKER WATER TREATMENT PLANT
PROJECT NO. 11218

TRABUCO CANYON WATER DISTRICT
PUMP STATION - SECTIONS II

DRAWING **H104**
SHEET **4X4** OF **632**

LAST SAVED BY: noeltapia LAST UPDATED: 01/19/2012 05:58 PM FILENAME: 6232-H104.dwg

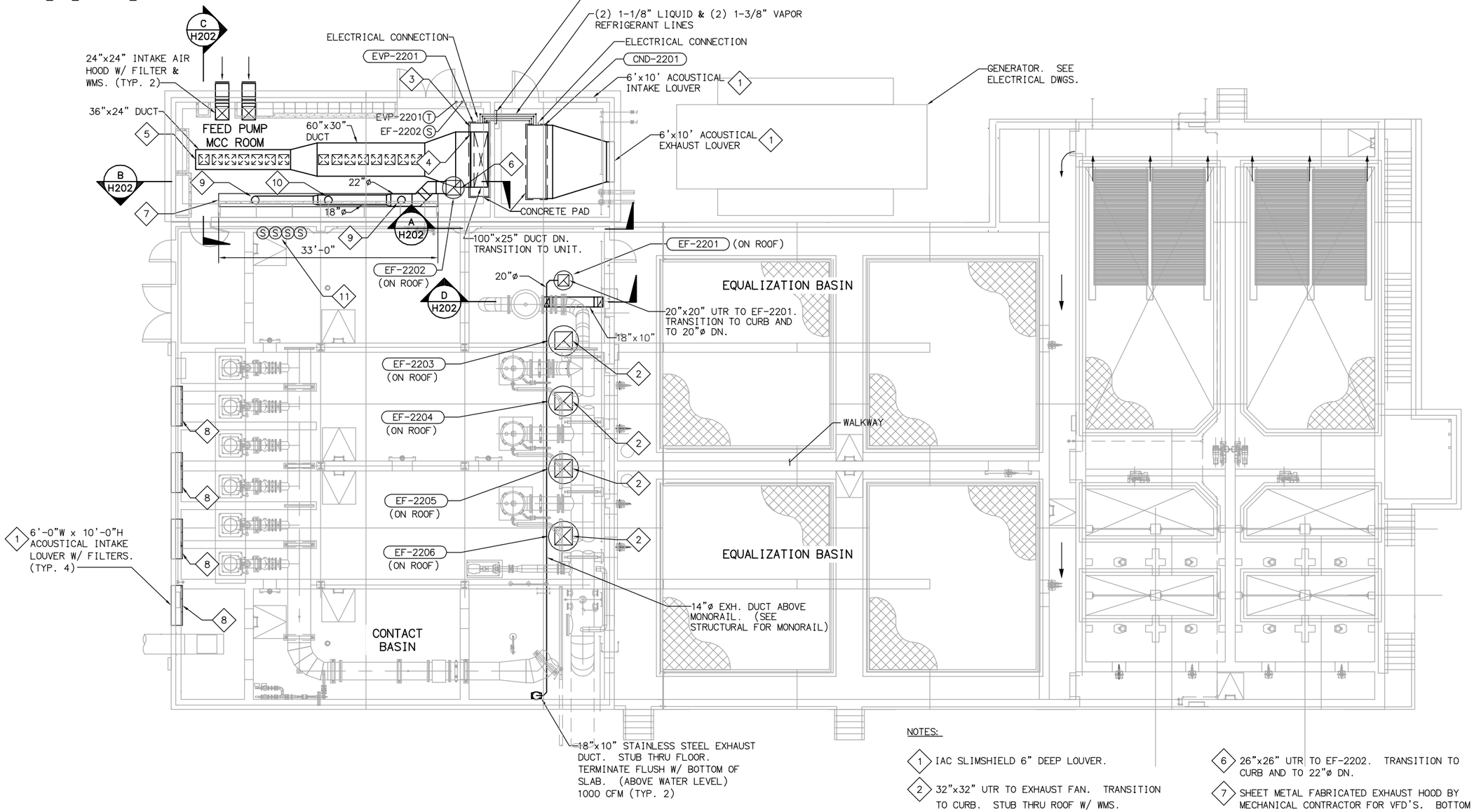

PLAN ABOVE ELEV. 634.0

SCALE: 1/8" = 1'-0"

NOTES:

1. IAC SLIMSHIELD 6" DEEP LOUVER.
2. 32"x32" UTR TO EXHAUST FAN. TRANSITION TO CURB. STUB THRU ROOF W/ WMS.
3. 3/4" CONDENSATE CONNECTION (30 TONS). INTERNALLY TRAPPED & PUMPED CONDENSATE. (PUMP BY MANUFACTURER)
4. 3/4" OVERFLOW (NOT PUMPED) THAT CAN BE CONNECTED TO A PIPE TERMINATING OUTSIDE.
5. SA - 965 CFM. KRUEGER MODEL 880, 18"x18" SUPPLY GRILLE MOUNTED ON BOTTOM OF DUCT (TYP. 15)
6. 26"x26" UTR TO EF-2202. TRANSITION TO CURB AND TO 22"ø DN.
7. SHEET METAL FABRICATED EXHAUST HOOD BY MECHANICAL CONTRACTOR FOR VFD'S. BOTTOM OF HOOD TO BE 6" ABOVE TOP OF ELECTRICAL EQUIPMENT.
8. 24"x24" MERV 5 FILTERS. 3 FILTERS WIDE BY 5 FILTERS HIGH.
9. 14"ø DN. TO VFD EXHAUST HOOD. (825 CFM)
10. 14"ø DN. TO VFD EXHAUST HOOD. (850 CFM)
11. PUMP ROOM EXHAUST FAN TEMPERATURE SENSORS. (EF-2203 THRU 2206)

TRUE NORTH

EQUIPMENT TAG NUMBERS ON THIS DRAWING ARE PRECEDED W/ 02-HVAC- UNLESS OTHERWISE LABELED

No.	DATE	REVISIONS	APPROVED

DESIGNED: TI
DRAWN: NT
CHECKED: TI

RBF CONSULTING

carollo

IRVINE RANCH WATER DISTRICT

TIM IMHOFF	RME NO. M027832	MECHANICAL ENGINEER	DATE
CINDY MILLER	RCE NO. 58116	PROJECT MANAGER	DATE
PATRICIA UEMATSU	RCE NO. 36762	PRINCIPAL ENGINEER	DATE

REGISTERED PROFESSIONAL ENGINEER TIMOTHY A. IMHOFF No. M027832 Exp. 6-30-12 MECHANICAL STATE OF CALIFORNIA

IRVINE RANCH WATER DISTRICT
BAKER WATER TREATMENT PLANT
PROJECT NO. 11218

FOREBAY VENTILATION PLAN

DRAWING H201

SHEET 415 OF 632

LAST SAVED BY: noeltapia LAST UPDATED: 01/19/2012 06:00 PM FILENAME:8127A10-6232-H201.dwg

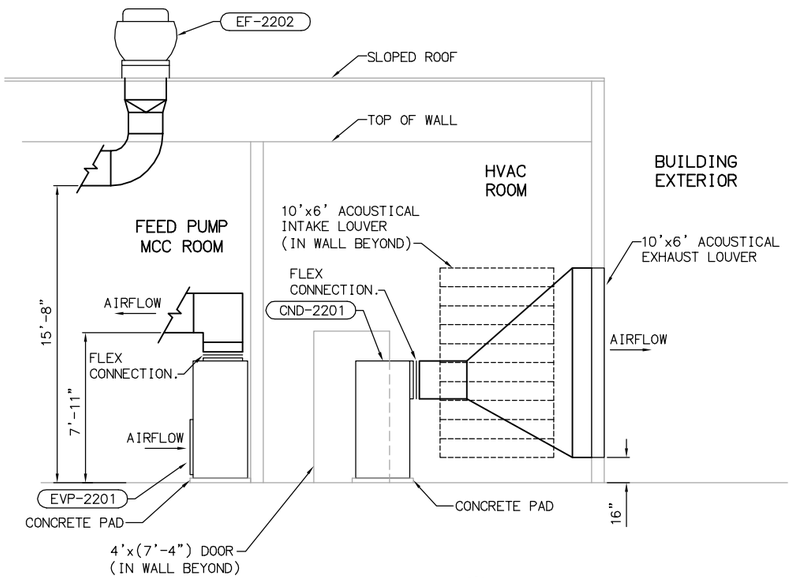

SECTION A H201
SCALE: 1/4" = 1'-0"

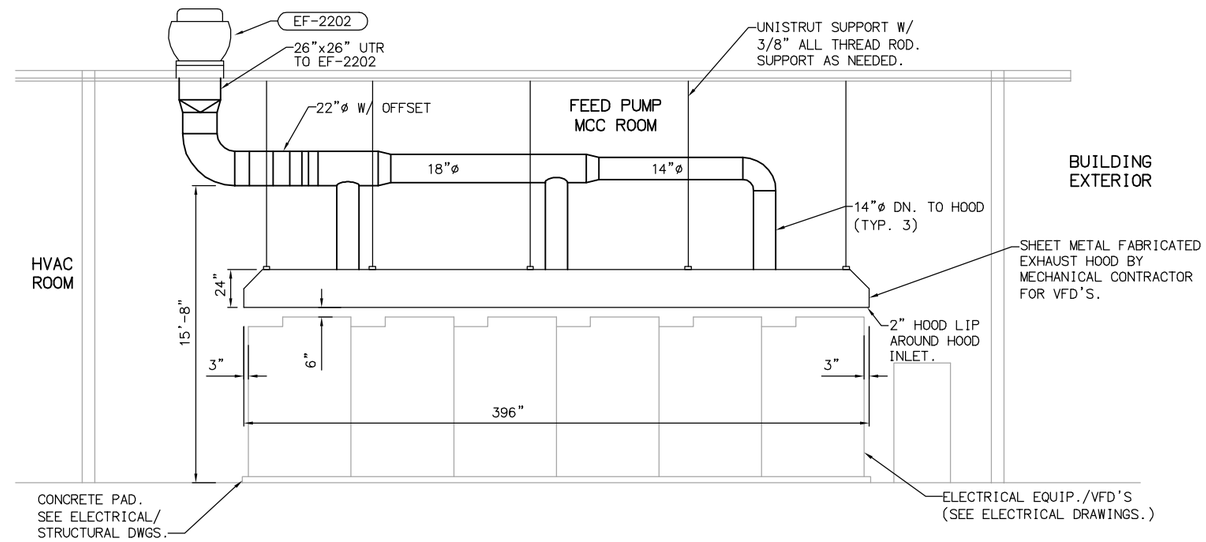

SECTION B H201
SCALE: 1/4" = 1'-0"

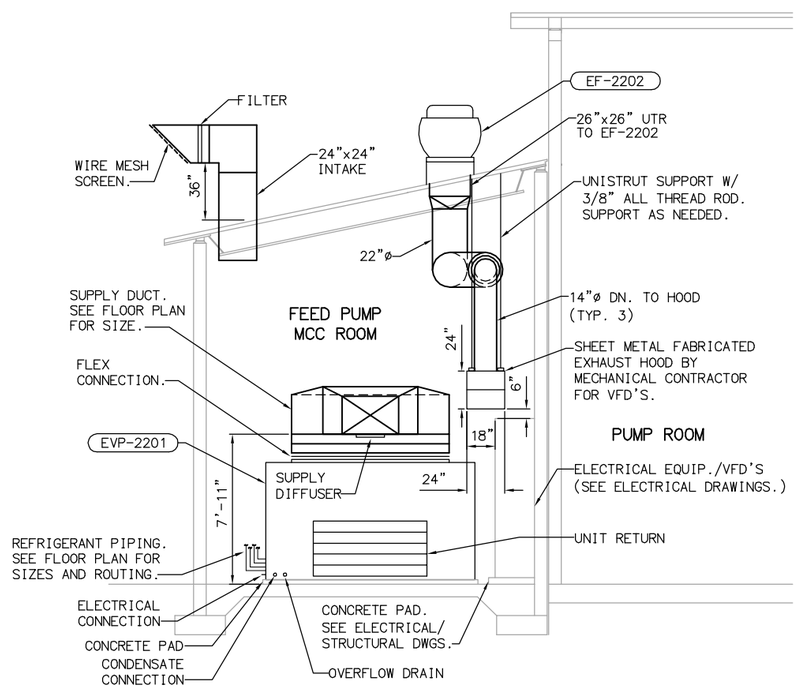

SECTION C H201
SCALE: 1/4" = 1'-0"

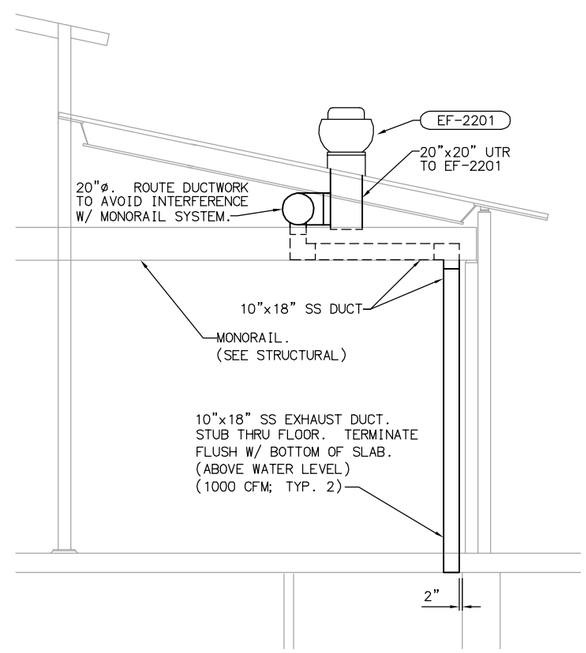

SECTION D H201
SCALE: 1/4" = 1'-0"

EQUIPMENT TAG NUMBERS ON THIS DRAWING ARE PRECEDED W/ 02-HVAC- UNLESS OTHERWISE LABELED

No.	DATE	REVISIONS	APPROVED

DESIGNED: TI
DRAWN: NT
CHECKED: TI

RBF CONSULTING

carollo

IRVINE RANCH WATER DISTRICT

TIM IMHOFF	RME NO. M027832	MECHANICAL ENGINEER	DATE
CINDY MILLER	RCE NO. 58116	PROJECT MANAGER	DATE
PATRICIA UEMATSU	RCE NO. 36762	PRINCIPAL ENGINEER	DATE

REGISTERED PROFESSIONAL ENGINEER TIMOTHY A. IMHOFF No. M027832 Exp. 6-30-12 MECHANICAL STATE OF CALIFORNIA

IRVINE RANCH WATER DISTRICT
BAKER WATER TREATMENT PLANT
PROJECT NO. 11218

FOREBAY SECTION

DRAWING H202
SHEET 416 OF 632

FILENAME: 8127A10-6232-H202.dwg
LAST UPDATED: 01/19/2012 06:03 PM
LAST SAVED BY: noeltapia

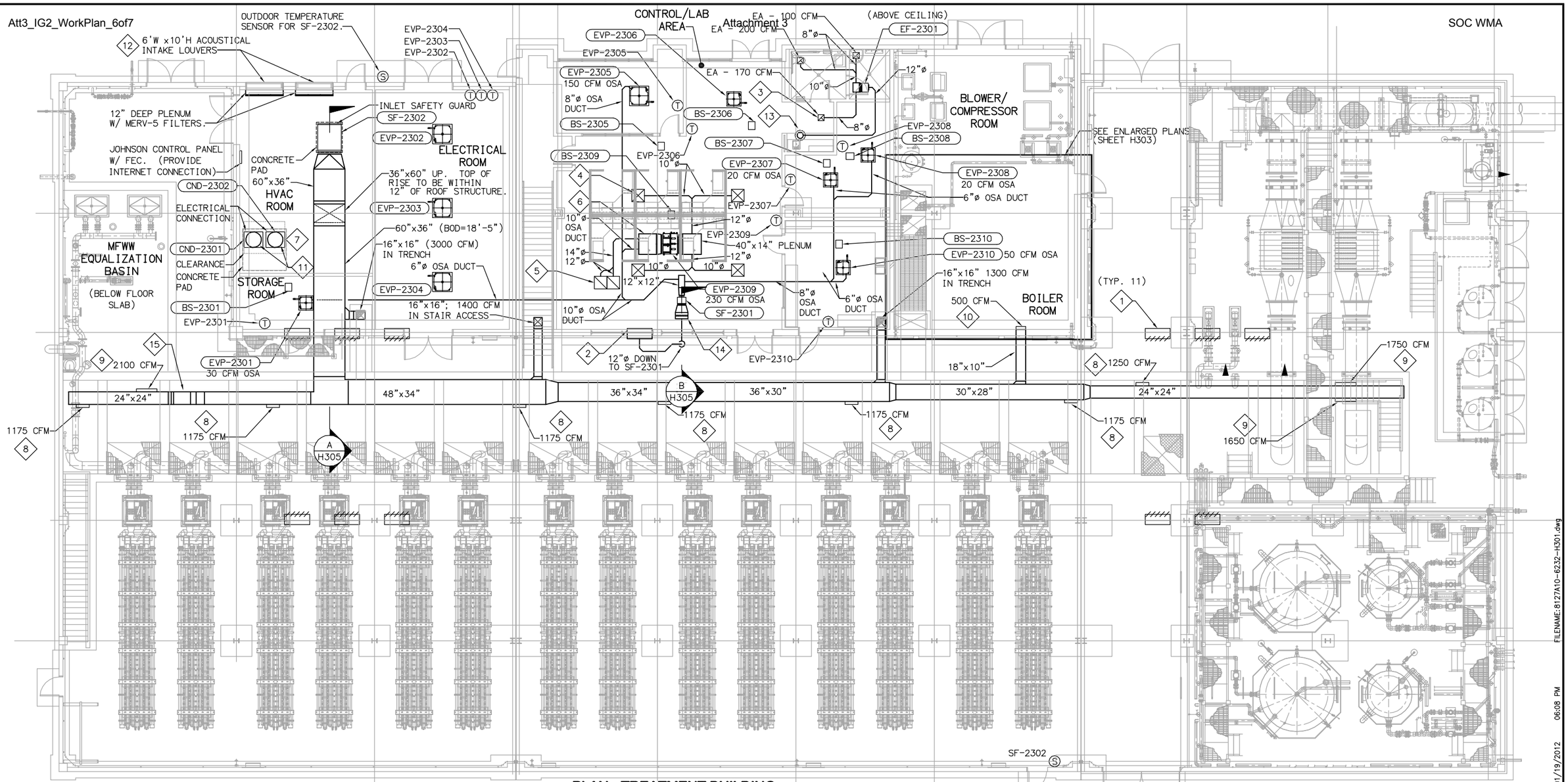

PLAN - TREATMENT BUILDING

SCALE: 1/8" = 1'-0"

NOTES:

1. RUSKIN ELF6811 4'-0"W x 2'-6"H RELIEF LOUVER WITH BAROMETRIC RELIEF DAMPER. (HIGH)
2. RUSKIN ELF 6811 4'-0"W x 2'-6"H INTAKE LOUVER. (HIGH)
3. KRUEGER MODEL S80 EXHAUST GRILLE. 12"x12" (TYP. 3)
4. KRUEGER MODEL 6500 SUPPLY DIFFUSER. 24"x24" (280 CFM) (TYP. 4)
5. KRUEGER MODEL 6690 RETURN DIFFUSER. 24"x24" (445 CFM) (TYP. 2)
6. 40"x16" RA PLENUM. PROVIDE (2) 20"x16" FILTERS. (SEE EVP-2309 SCHEDULE FOR FILTER MODEL).
7. SEE SHEET H302 FOR DAIKIN SYSTEM PIPING PLAN.
8. KRUEGER MODEL DPL SUPPLY GRILLE. 25"W x 10"H
9. KRUEGER MODEL DPL SUPPLY GRILLE. 40"W x 10"H
10. KRUEGER MODEL 880 SUPPLY GRILLE. 18"W x 10"H
11. 30ø CONDENSING UNIT EXHAUST UTR. TERMINATE W/ GOOSENECK & WIRE MESH SCREEN.
12. IAC SLIMSHIELD 6" DEEP LOUVER.
13. 12ø EXHAUST UTR TO COOK PR-12 ROOF CAP.
14. 20"x16" FAN INLET PLENUM W/ 20"x16" CAMFIL FARR 30/30 FILTER. TRANSITION TO FAN INLET W/ FLEX CONNECTION. PROVIDE ACCESS IN CEILING FOR FAN MAINTENANCE AND FILTER REPLACEMENT.
15. OFFSET DUCT TO AVOID ROOF.

EQUIPMENT TAG NUMBERS ON THIS DRAWING ARE PRECEDED W/ 03-HVAC- UNLESS OTHERWISE LABELED

TRUE NORTH
PLANT NORTH

No.	DATE	REVISIONS	APPROVED

DESIGNED: TI
DRAWN: NT
CHECKED: TI

RBF CONSULTING

carollo

IRVINE RANCH WATER DISTRICT

TIM IMHOFF	RME NO. M027832	MECHANICAL ENGINEER	DATE
CINDY MILLER	RCE NO. 58116	PROJECT MANAGER	DATE
PATRICIA UEMATSU	RCE NO. 36762	PRINCIPAL ENGINEER	DATE

REGISTERED PROFESSIONAL ENGINEER TIMOTHY A. IMHOFF No. M027832 Exp. 6-30-12 MECHANICAL STATE OF CALIFORNIA

IRVINE RANCH WATER DISTRICT
BAKER WATER TREATMENT PLANT
PROJECT NO. 11218

TREATMENT BUILDING VENTILATION PLAN

DRAWING H301
SHEET 4X7 OF 632

FILENAME:8127A10-6232-H301.dwg
LAST UPDATED: 01/19/2012 06:08 PM
LAST SAVED BY: noeltapia

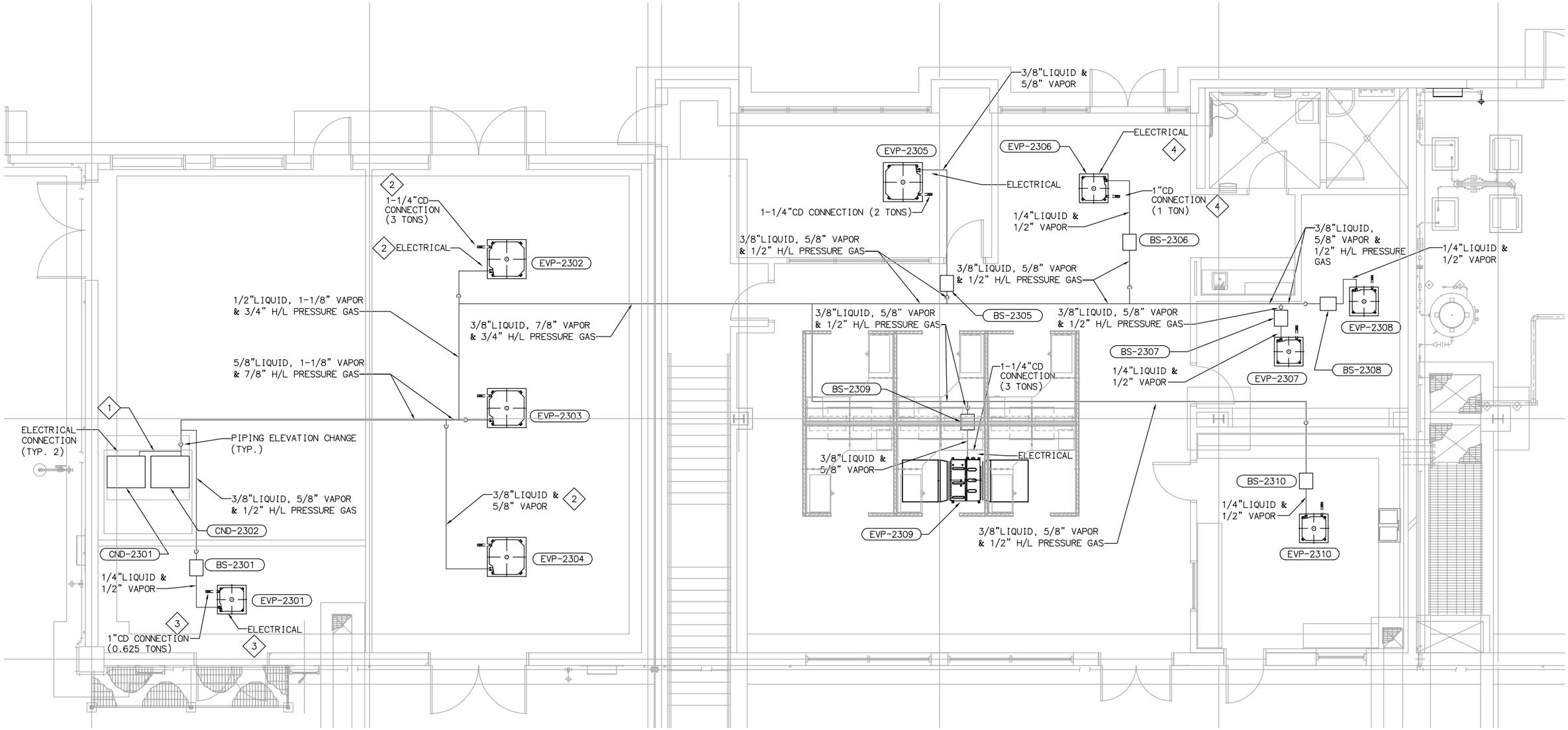

NOTES:

1. 3/8"LIQUID, 7/8"VAPOR & 3/4" H/L PRESSURE GAS REFRIGERANT LINES FROM EACH CONDENSING UNIT (CND-2301 & CND-2302) PIPED TOGETHER TO ONE SET OF 5/8"LIQUID, 1-1/8"VAPOR & 7/8" H/L PRESSURE GAS LINES.
2. TYP. FOR EVP-2302, EVP-2303, AND EVP-2304.
3. TYP. FOR EVP-2301, EVP-2307 AND EVP-2308.
4. TYP. FOR EVP-2306 AND EVP-2310

TRUE NORTH
PLANT NORTH

DAIKIN SYSTEM PIPING PLAN - TREATMENT BUILDING

SCALE: 1/4" = 1'-0"

EQUIPMENT TAG NUMBERS ON THIS DRAWING ARE PRECEDED W/ 03-HVAC- UNLESS OTHERWISE LABELED

No.	DATE	REVISIONS	APPROVED

DESIGNED: TI
DRAWN: NT
CHECKED: TI

RBF CONSULTING
carollo
IRVINE RANCH WATER DISTRICT

TIM IMHOFF	RME NO. M027832	MECHANICAL ENGINEER	DATE
CINDY MILLER	RCE NO. 58116	PROJECT MANAGER	DATE
PATRICIA UEMATSU	RCE NO. 36762	PRINCIPAL ENGINEER	DATE

REGISTERED PROFESSIONAL ENGINEER TIMOTHY A. IMHOFF No. M027832 Exp. 6-30-12 MECHANICAL STATE OF CALIFORNIA

IRVINE RANCH WATER DISTRICT
BAKER WATER TREATMENT PLANT
PROJECT NO. 11218

TREATMENT BUILDING
DAIKIN SYSTEM PIPING PLAN

DRAWING H302
SHEET 418 OF 632

FILENAME: 8127A10-6232-H302.dwg
LAST UPDATED: 01/19/2012 06:14 PM
LAST SAVED BY: noeltapia

NOTES:

1. 10"ø PVC COMBUSTION AIR DUCT UTR & DOWN. PROTECT PVC ABOVE ROOF FROM UV EXPOSURE. DIRECTLY CONNECT TO BOILER. (TYP. 3)
2. IAC SLIMSHIELD 6" DEEP LOUVER
3. SEE MECHANICAL DRAWINGS (SHEET M312) FOR CONTINUATION OF MAKE-UP WATER PIPING (SUW2).
4. BOILER CONTROL PANEL. (MOUNTED ON WALL)
5. 3/4" MPG (5 PSI) (1,364 CFH) TO GAS PRV. (TYP. 3)

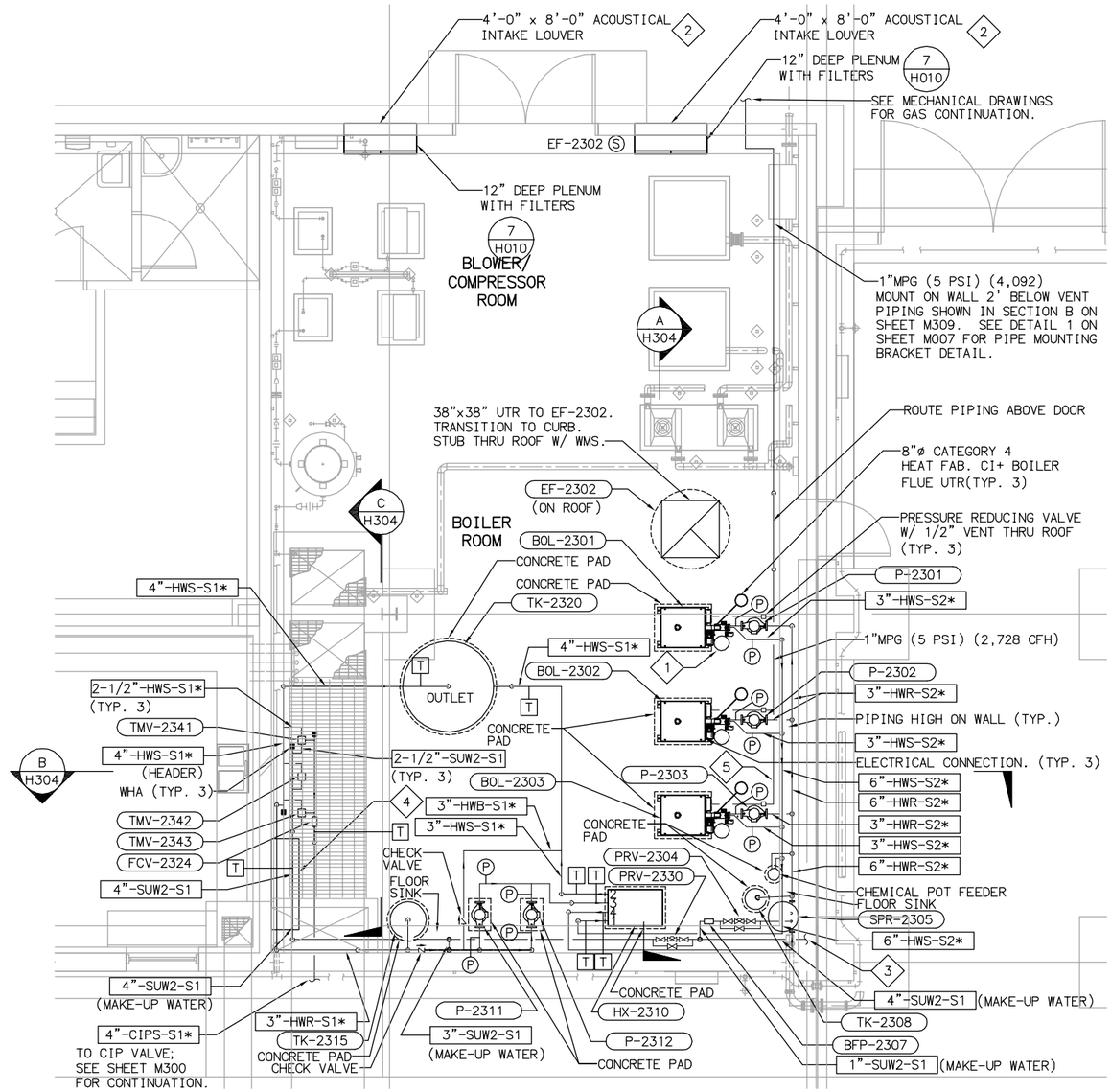

BOILER ROOM PLAN - TREATMENT BUILDING

SCALE: 1/4" = 1'-0"

(P) - PRESSURE TRANSMITTER

[T] - TEMPERATURE TRANSMITTER

SEE SHEET H013 FOR EQUIPMENT TAGS FOR PRESSURE TRANSMITTERS AND TEMPERATURE TRANSMITTERS

SEE SHEET H013 FOR VALVE LOCATIONS AND EQUIPMENT TAGS.

EQUIPMENT TAG NUMBERS ON THIS DRAWING ARE PRECEDED W/ 03-HVAC- UNLESS OTHERWISE LABELED

No.	DATE	REVISIONS	APPROVED

DESIGNED: TI
DRAWN: NT
CHECKED: TI

RBF CONSULTING

carollo

IRVINE RANCH WATER DISTRICT

TIM IMHOFF	RME NO. M027832	MECHANICAL ENGINEER	DATE
CINDY MILLER	RCE NO. 58116	PROJECT MANAGER	DATE
PATRICIA UEMATSU	RCE NO. 36762	PRINCIPAL ENGINEER	DATE

REGISTERED PROFESSIONAL ENGINEER TIMOTHY A. IMHOFF No. M027832 Exp. 6-30-12 MECHANICAL STATE OF CALIFORNIA

IRVINE RANCH WATER DISTRICT
BAKER WATER TREATMENT PLANT
PROJECT NO. 11218

TREATMENT BUILDING
BOILER ROOM PLAN

DRAWING H303

SHEET 419 OF 632

LAST SAVED BY: noetapia LAST UPDATED: 01/19/2012 06:55 PM FILENAME:8127A10-6232-H303.dwg

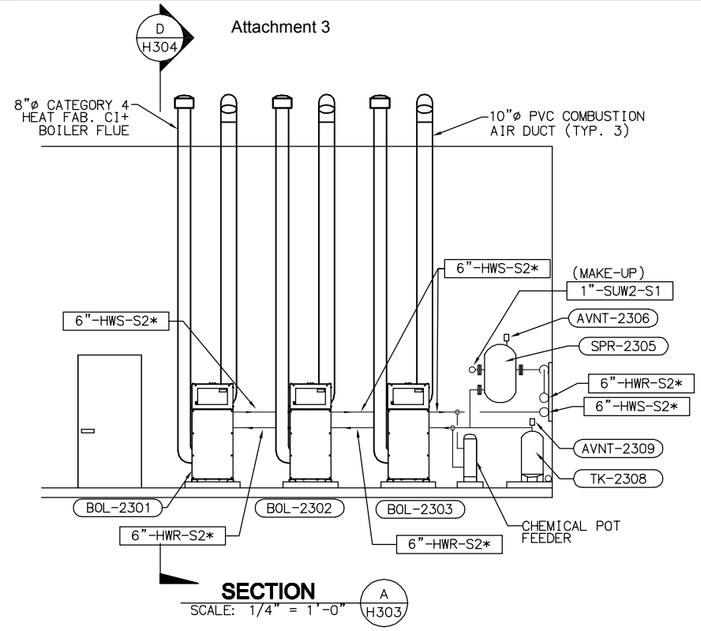

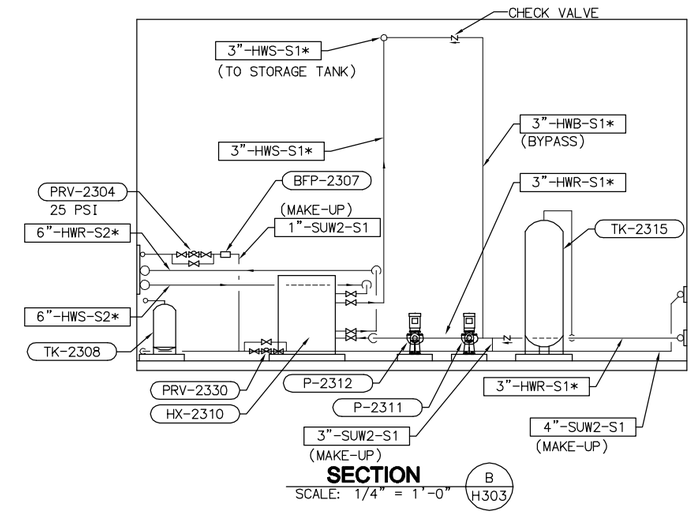

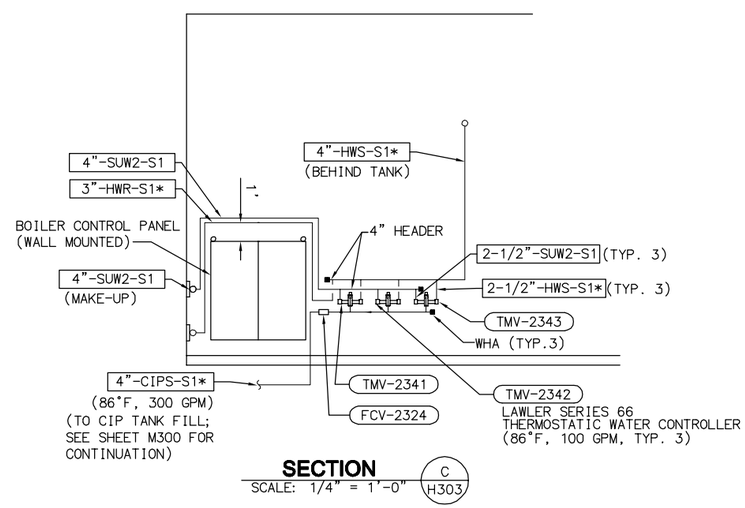

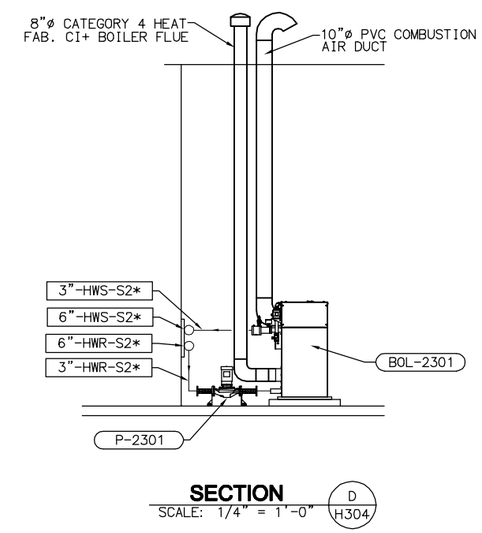

EQUIPMENT TAG NUMBERS ON THIS DRAWING ARE PRECEDED W/ 03-HVAC- UNLESS OTHERWISE LABELED

No.	DATE	REVISIONS	APPROVED

DESIGNED: TI
DRAWN: NT
CHECKED: TI

RBF CONSULTING

carollo

IRVINE RANCH WATER DISTRICT

TIM IMHOFF	RME NO. M027832	MECHANICAL ENGINEER	DATE
CINDY MILLER	RCE NO. 58116	PROJECT MANAGER	DATE
PATRICIA UEMATSU	RCE NO. 36762	PRINCIPAL ENGINEER	DATE

REGISTERED PROFESSIONAL ENGINEER TIMOTHY A. IMHOFF No. M027832 Exp. 6-30-12 MECHANICAL STATE OF CALIFORNIA

IRVINE RANCH WATER DISTRICT
BAKER WATER TREATMENT PLANT
PROJECT NO. 11218

TREATMENT BUILDING SECTIONS I

DRAWING
H304
SHEET
420 OF **632**

FILENAME: 81271A10-6232-H304.dwg
LAST UPDATED: 01/19/2012 06:52 PM
LAST SAVED BY: timimhoff

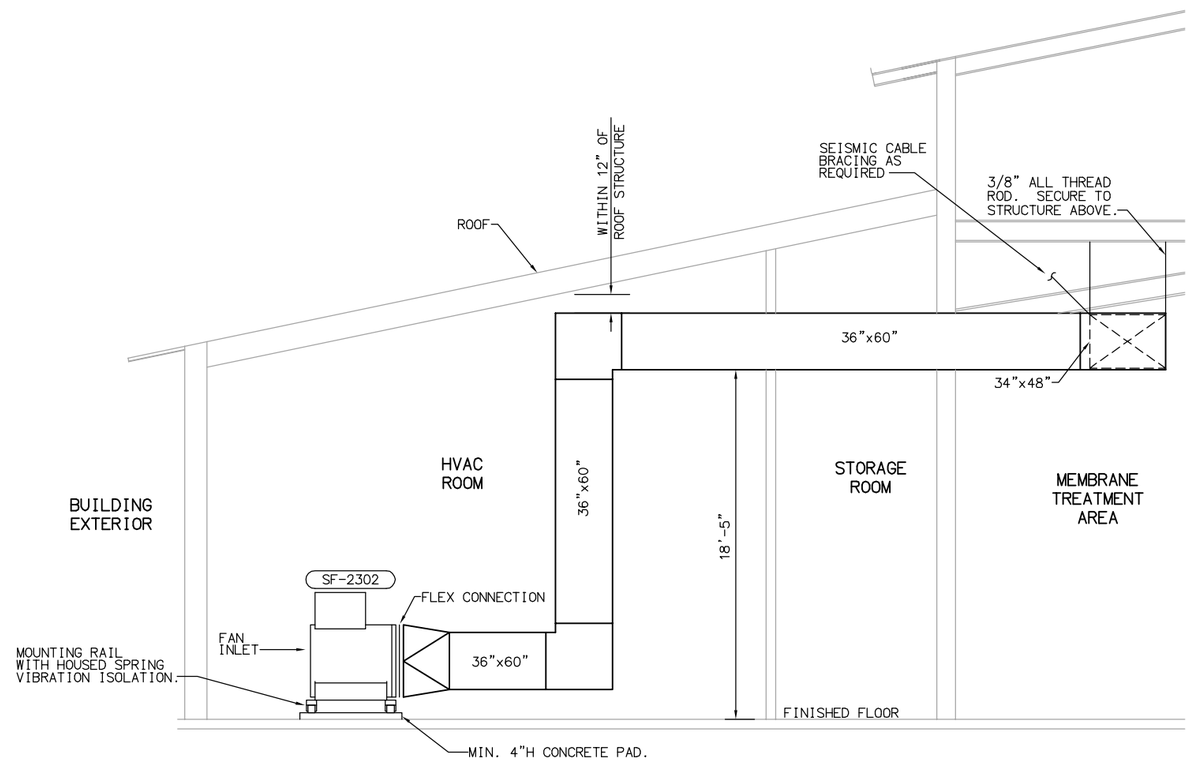

SECTION A H301
SCALE: 1/4" = 1'-0"

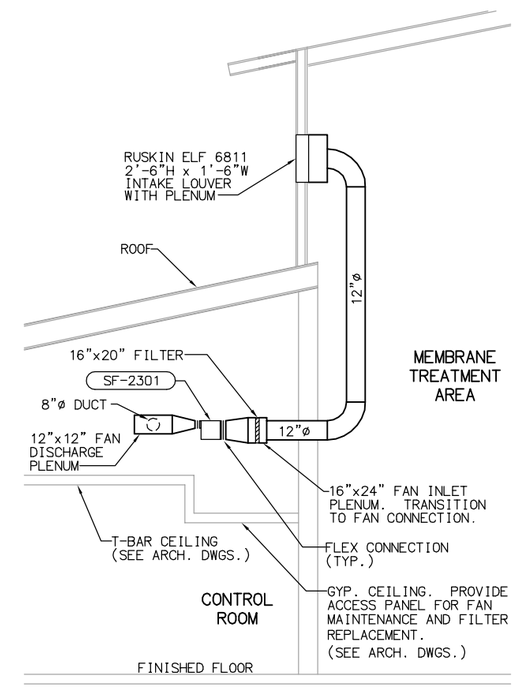

SECTION B H301
SCALE: 1/4" = 1'-0"

EQUIPMENT TAG NUMBERS ON THIS DRAWING ARE PRECEDED W/ 03-HVAC- UNLESS OTHERWISE LABELED

No.	DATE	REVISIONS	APPROVED

DESIGNED: TI
DRAWN: NT
CHECKED: TI

RBF CONSULTING

carollo

IRVINE RANCH WATER DISTRICT

TIM IMHOFF	RME NO. M027832	MECHANICAL ENGINEER	DATE
CINDY MILLER	RCE NO. 58116	PROJECT MANAGER	DATE
PATRICIA UEMATSU	RCE NO. 36762	PRINCIPAL ENGINEER	DATE

REGISTERED PROFESSIONAL ENGINEER TIMOTHY A. IMHOFF No. M027832 Exp. 6-30-12 MECHANICAL STATE OF CALIFORNIA

IRVINE RANCH WATER DISTRICT
BAKER WATER TREATMENT PLANT
PROJECT NO. 11218

TREATMENT BUILDING SECTIONS II

DRAWING **H305**
SHEET **421** OF **632**

FILENAME:8127A10-6232-H305.dwg LAST UPDATED: 01/19/2012 06:53 PM LAST SAVED BY: timmhoff

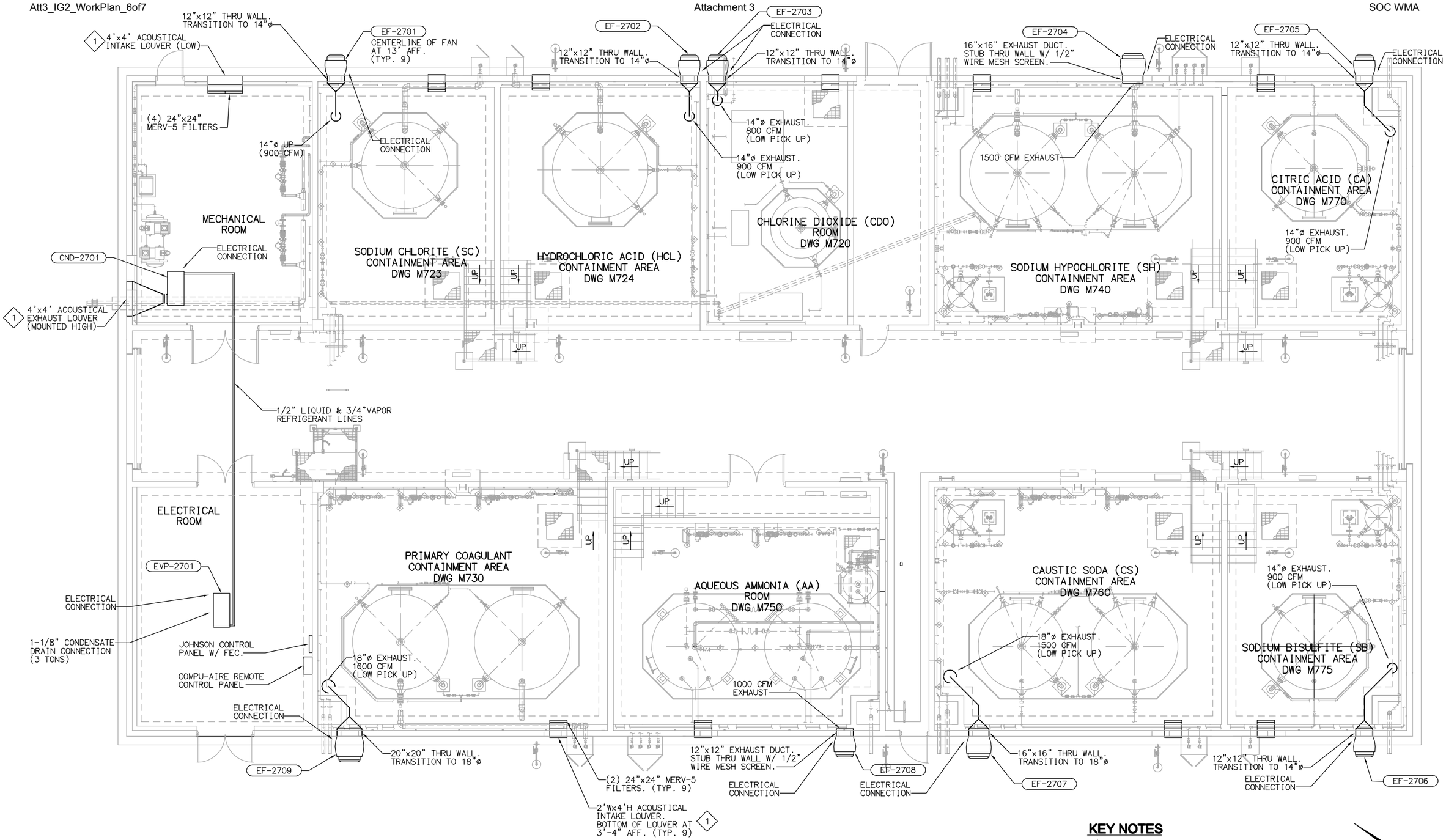

VENTILATION PLAN

SCALE: 3/16" = 1'-0"

NOTE: ALL CHEMICAL BUILDING EXHAUST FANS (EF-2701 THRU EF-2709) TO RUN CONTINUOUSLY.

KEY NOTES

1 IAC SLIMSHIELD 6" DEEP LOUVER.

EQUIPMENT TAG NUMBERS ON THIS DRAWING ARE PRECEDED W/ 07-HVAC- UNLESS OTHERWISE LABELED

No.	DATE	REVISIONS	APPROVED

DESIGNED: TI
DRAWN: NT
CHECKED: TI

RBF CONSULTING

carollo

IRVINE RANCH WATER DISTRICT

TIM IMHOFF	RME NO. M027832	MECHANICAL ENGINEER	DATE
CINDY MILLER	RCE NO. 58116	PROJECT MANAGER	DATE
PATRICIA UEMATSU	RCE NO. 36762	PRINCIPAL ENGINEER	DATE

REGISTERED PROFESSIONAL ENGINEER TIMOTHY A. IMHOFF No. M027832 Exp. 6-30-12 MECHANICAL STATE OF CALIFORNIA

IRVINE RANCH WATER DISTRICT
BAKER WATER TREATMENT PLANT
PROJECT NO. 11218

CHEMICAL BUILDING VENTILATION PLAN

DRAWING H701
SHEET 425 OF 632

LAST SAVED BY: timimhoff LAST UPDATED: 01/19/2012 06:43 PM FILENAME: 8127A10-6232-H701.dwg

ELECTRICAL ABBREVIATIONS

A	AMPERES	KW	KILOWATT
AF	AMPERE FRAME	KWT	KILOWATT TRANSDUCER
AT	AMPERE TRIP	LCL	LONG CONTINUOUS LOAD
AIC	AMPS INTERRUPTING CAPACITY	LTS	LIGHTING, LIGHT
AFF	ABOVE FINISH FLOOR	M	METER
ATS	AUTOMATIC TRANSFER SWITCH	MC	METALLIC CONDUIT
BC	BARE COPPER	MCA	MINIMUM CIRCUIT AMPACITY
BLDG	BUILDING	MCP	MOTOR CIRCUIT PROTECTOR
BRKR	BREAKER	MFS	MAXIMUM FUSE SIZE
CB	CIRCUIT BREAKER	MSC	MANUFACTURER SUPPLIED CABLE
CKT	CIRCUIT	MTG	MOUNTING
COND	CONDUCTOR	MTS	MANUAL TRANSFER SWITCH
CS	CURRENT SENSOR	NIC	NOT IN CONTACT
C	CONDUIT, CENTIGRADE	NO	NUMBER DESIGNATION
CO	CONDUIT ONLY	NTS	NOT TO SCALE
CU	COPPER	P	POLE
DET	DETAIL	PNL	PANEL
DISC	DISCONNECT	PVC	POLYVINYL CHLORIDE
DWG	DRAWING	RECPT	RECEPTACLE
ELEV	ELEVATION	REF	REFERENCE
EMER	EMERGENCY	SEC	SECONDARY, SECOND
FA	FIRE ALARM	SHT	SHEET
FLA	FULL LOAD AMPERES	SOV	SOLENOID OPERATED VALVE
FLEX	FLEXIBLE	SPECS	SPECIFICATIONS
FLUOR	FLUORESCENT	S/S	START/STOP, STAINLESS STEEL
GEN	GENERATOR	SST	SOLID STATE TRIP
GND	GROUND	STD	STANDARD
GFI	GROUND FAULT INTERRUPTER	SW	SWITCH
HZ	HERTZ	SWBD	SWITCHBOARD
HP	HORSE POWER	TEL	TELEPHONE
HPS	HIGH PRESSURE SODUIM	XFMR	TRANSFORMER
IT	CURRENT TRANSDUCER	TYP	TYPICAL
IS	INTRUSION SWITCH	UG	UNDERGROUND
INCAND	INCANDESCENT	UON	UNLESS OTHERWISE NOTED
JB	JUNCTION BOX	VFD	VARIABLE FREQUENCY DRIVE
KVA	KILOVOLT-AMPERES	V	VOLT
KV	KILOVOLT	VL	VERIFY LOCATION
		W	WATTS, WIRE, WIDTH
		WP	WEATHERPROOF
		ZS	LIMIT SWITCH

ELECTRICAL SYMBOLS

F1	FUSE
Δ Y	TRANSFORMER OR TRANSFORMER BANK.
	MOTOR STARTER OR CONTACTOR.
	GROUND ROD 3/4"X10'
	12' ELECTROLYTIC XIT GROUND SYSTEM
M	ELECTRIC MOTOR, HORSEPOWER INDICATED BY NUMBER
UEM1	UNDERGROUND ELECTRICAL MANHOLE, NUMBERED AS SHOWN.
T	THERMOSTAT
$M	MOTOR RATED SWITCH 120V 20A SQ "D" TYPE "F" OR EQUAL
3P	MOLDED CASE CIRCUIT BREAKER WITH THERMAL MAGNETIC TRIPS, 3-POLE, UNLESS OTHERWISE NOTED.
PE	PHOTO ELECTRIC CELL
	SOFT STARTER
	CONTACT, NORMALLY OPEN
	CONTACT, NORMALLY CLOSED
	CONTACT, NORMALLY CLOSED, TIME DELAY CLOSING ON DE-ENERGIZING
	CONTACT, NORMALLY OPEN, TIME DELAY OPENING ON DE-ENERGIZING
	CONTACT, NORMALLY OPEN, TIME DELAY CLOSING ON ENERGIZING
	CONTACT, NORMALLY CLOSED, TIME DELAY OPENING ON ENERGIZING
	OPERATING COIL
	LIQUID LEVEL ACTUATED SWITCH NORMALLY CLOSED
	LIQUID LEVEL ACTUATED SWITCH NORMALLY OPEN
	PRESSURE ACTUATED SWITCH NORMALLY CLOSED
	PRESSURE ACTUATED SWITCH NORMALLY OPEN
	FLOW ACTUATED SWITCH, NORMALLY CLOSED
	FLOW ACTUATED SWITCH, NORMALLY OPEN
	TEMPERATURE ACTUATED SWITCH NORMALLY CLOSED
	TEMPERATURE ACTUATED SWITCH NORMALLY OPEN
	LIMIT SWITCH, NORMALLY CLOSED
	LIMIT SWITCH, NORMALLY OPEN
	PUSHBUTTON SWITCH, NORMALLY CLOSED
	PUSHBUTTON SWITCH, NORMALLY OPEN
	SWITCH, SINGLE POLE
	SWITCH, SINGLE POLE DOUBLE-THROW
	SWITCH, SINGLE POLE, 3 POSITION
	THERMAL OVERLOAD
PS	PRESSURE SWITCH
	DRAWOUT CIRCUIT BREAKER
	LIGHT POLE. SEE FIXTURE SCHEDULE FOR DETAILS.

ELECTRICAL SYMBOLS

1 / E-1	DETAIL NUMBER / SHEET DETAIL IS DRAWN ON } DETAIL CALLOUT
	TERMINAL CABINET AS NOTED ON PLAN DRAWING
	TERMINAL CABINET AS NOTED ON PLAN DRAWING
	CONDUIT RUN IN WALL OR CEILING
	CONDUIT RUN UNDERGROUND
	CONDUIT RUN STUBBED AND CAPPED
	CONDUIT RISE
	CONDUIT DROP
10	INDICATES WIRE SIZE, HASH MARKS INDICATE NUMBER OF WIRES, OTHERWISE 2-#12 & 1-#12 GND IN 3/4" CONDUIT
A-1,3	HOMERUN TO PANEL "A" W/3 #12 WIRES CONNECTED TO CIRCUIT #1 & #3.
J	JUNCTION BOX OUTLET, BLANK COVER PLATE, WALL MOUNTED
$a, b, c	1-POLE TOGGLE SWITCH MOUNTED +4'-0", SUBSCRIPTS INDICATE NO. OF SWITCHES & OUTLETS CONTROLLED.
$2	MULTIPLE WAY SWITCH, SWITCHES 2, 3, OR 4 INDICATES NUMBER OF WAYS, MOUNTED +4'-0"
	FLEXIBLE CONDUIT CONNECTION
	CONDULET SEALING FITTING FOR HAZARDOUS LOCATION
4' 1'	STRIP FLUORESCENT LIGHTING FIXTURE.
4' 2'	STRIP FLOURESCENT LIGHTING FIXTURE WITH SINGLE LAMP EMERGENCY BATTERY UNIT.
L1	LIGHTING FIXTURE, CEILING MOUNTED.
L2	LIGHTING FIXTURE, WALL MOUNTED.
	EXIT SIGN LIGHT, SINGLE FACE W/ DIRECTION INDICATED.
LL	LOW LEVEL EXIT SIGN BOTTOM OF THE FIXTURE, MOUNTED +0'-6"
A / 120	FIXTURE TYPE / FIXTURE VOLT-AMPS } LIGHTING FIXTURE CALLOUT
IS	INTRUSION SWITCH
OS	MOTION SENSOR
	ELECTRICAL PANEL SURFACE MOUNTED
	SWITCHBOARD OR POWER PANELBOARD
ETM	ELAPSED TIME METER
	DUPLEX RECEPTACLE-WALL MOUNTED +12" U.O.N.
XXX	CONDUIT NUMBER
S	DUPLEX RECEPTACLE - WALL MOUNTED +12" U.O.N. (SURGE SUPPRESSION TYPE).
	NON-FUSED DISCONNECT SWITCH
F	FUSED DISCONNECT SWITCH
1	COMBINATION MOTOR STARTER, +5'-0" AFF U.O.N. NO. INDICATES STARTER SIZE
PEC	PHOTOELECTRIC CONTROL UNIT
	GROUNDING CONDUIT AND CONDUCTOR.
CR1	CONTROL RELAY
CR	CARD READER
	LIGHT POLE WITH POLE MOUNTED SECURITY CAMERA,

ELECTRICAL NOTES

1. REFER TO ELECTRICAL SPECIFICATIONS FOR FURTHER DETAIL AS TO SCOPE, MATERIALS, AND EXECUTION OF ELECTRICAL WORK.
2. ALL WIRING DESIGN IS BASED ON 75 DEGREE C CONDITIONS FOR COPPER CONDUCTORS OF TYPE THWN UNLESS OTHERWISE STATED.
3. ELECTRICAL CONTRACTOR TO SIZE ALL WIRING NOT EXPLICITLY SHOWN ON DRAWINGS ACCORDING TO THE REQUIREMENTS OF NATIONAL ELECTRICAL CODE (NEC) FOR THE SPECIFIC APPLICATION AND CONDITIONS.
4. ALL CONDUCTORS SHALL BE COPPER (MINIMUM SIZE #12 AWG UNLESS SPECIFICALLY NOTED OTHERWISE).
5. CONTRACTOR SHALL SUBMIT SEISMIC ANCHORAGE CALCULATION IN CONFORMANCE W/CODE REQUIREMENTS.
6. THE ELECTRICAL CONTRACTOR SHALL BE RESPONSIBLE TO CONFORM TO ALL LOCAL CODES AND ORDINANCES, THE STATE OF CALIFORNIA ELECTRICAL SAFETY ORDERS, THE NATIONAL ELECTRICAL CODE AND ANY ADDITIONAL JURISDICTION RELATING TO THE WORK.
7. THE ELECTRICAL CONTRACTOR SHALL PROVIDE SEISMIC ANCHORAGE FOR ALL ELECTRICAL EQUIPMENT IN ACCORDANCE WITH THE CALIFORNIA BUILDING CODE.
8. THE ELECTRICAL CONTRACTOR SHALL FURNISH AND INSTALL ALL CONDUIT, WIRE, TRANSFER SWITCHES, RECEPTACLES, SERVICES, SWITCHBOARDS, MCC, AND PANELBOARDS REQUIRED FOR A COMPLETE AND OPERATIONAL ELECTRICAL SYSTEM.
9. THE ELECTRICAL CONTRACTOR SHALL BE RESPONSIBLE TO CONFIRM THAT PROPOSED NEW EQUIPMENT ON THE CONTRACT WILL FIT DIMENSIONALLY WITH EXISTING EQUIPMENT IN LOCATION SHOWN ON DRAWINGS.
10. IN THE EVENT OF A CONFLICT OR INCONSISTENCY BETWEEN ITEMS INDICATED ON THE PLANS AND/OR SPECIFICATIONS, OR WITH CODE REQUIREMENTS, THE NOTE, SPECIFICATION OR CODE WHICH PRESCRIBES AND ESTABLISHES THE MORE COMPLETE JOB OR HIGHER STANDARD SHALL PREVAIL.
11. ALL ELECTRICAL EQUIPMENT EXPOSED TO THE CLIMATE SHALL BE WEATHERPROOF.
12. ALL ELECTRICAL EQUIPMENT IN THIS PROJECT SHALL BE U.L. LISTED.
13. ALL UNDERGROUND CONDUIT SHALL BE INSTALLED AT 30" BELOW FINSHED GRADE MINIMUM.
14. THE ELECTRICAL CONTRACTOR SHALL BE RESPONSIBLE FOR LOCATING EXISTING UNDERGROUND FACILITIES AND PROTECTING THESE FACILITIES FROM DAMAGE.
15. THE ELECTRICAL CONTRACTOR SHALL ROUTE CONDUITS AS REQUIRED PER FIELD CONDITIONS AND N.E.C.
16. THE ELECTRICAL CONTRACTOR SHALL BE RESPONSIBLE FOR REPAIRING ANY DAMAGE TO EXISTING UNDERGROUND FACILITIES.

DRAWING SUMMARY

#	DESCRIPTION
E001 – E023	GENERAL / TYPICALS / SCE INFRASTRUCTURE
E101 – E109	RAW WATER (FLOW CONTROL FACILITY, TCWD PS)
E201 – E219	MF FEED PUMP STATION
E301 – E332	TREATMENT BUILDING
E401	CT BASIN
E501 – E533	PRODUCT WATER (PUMP STATION, PIPELINE)
E701 – E775	CHEMICAL BUILDING

DRAWING NUMBER (EXAMPLE)

#	DRAWING
E304	TREATMENT BUILDING OVERALL ELECTRICAL PLAN

FILENAME: 6232-E001.dwg LAST UPDATED: 01/24/2012 04:59 PM LAST SAVED BY: ypsee

No.	DATE	REVISIONS	APPROVED

DESIGNED: YPS
DRAWN: YPS
CHECKED: RVT

RBF CONSULTING | carollo | IRVINE RANCH WATER DISTRICT

RHONDA V. TIEJERINA REE NO. 15473 ELECTRICAL ENGINEER DATE
CINDY MILLER RCE NO. 58116 PROJECT MANAGER DATE
PATRICIA UEMATSU RCE NO. 36762 PRINCIPAL ENGINEER DATE

IRVINE RANCH WATER DISTRICT
BAKER WATER TREATMENT PLANT
PROJECT NO. 11218

ELECTRICAL SYMBOLS, NOTES, AND ABBREVIATIONS

DRAWING **E001**
SHEET **426** OF **632**

ELECTRICAL FIXTURE SCHEDULE

TYPE	DESCRIPTION	VOLT	LAMP			MOUNT	REMARKS
			NO.	WATT	TYPE		
A 62	48" INDUSTRIAL FLUORESCENT FIXTURE WITH ENCLOSED. GASKETED, REINFORCED FIBERGLASS HOUSING HIGH IMPACT ACRYLIC DIFFUSER. RAPID START BALLAST. LISTED FOR WET OR DAMP LOCATIONS. LITHONIA # DM/DMW 2-AR-32-120	120	2	32	FLUORESCENT T8	PENDANT	
B 62	SAME AS TYPE A EXCEPT W/1400 LUMEN EMERGENCY POWER PACK	120	2	32	FLUORESCENT T8	PENDANT	
C 70	HIGH PRESSURE SODIUM, PRISMATIC POLYCARBONATE FRONT COVER, WEATHER RESISTANT, DIE-CAST ALUMINUM HOUSING, UL LISTED FOR WET LOCATIONS. LUMARK #HPWK70HMT	120	1	70	HPS	WALL/SURFACE	
D 120	CONTEMPORARY LOW-PROFILE RECTILINEAR STYLING HPS 100W POLE MOUNTED HOLOPHANE CAT# SMST100HP128ZPMPS-R	120	1	100	HPS	POLE	
E 20	WALL MOUNTED EXIT LIGHT WITH POLYCARBONATE HOUSING AND LED LAMPS. BATTERY BACKUP SHALL SUPPLY 90 MINUTES OF BACKUP POWER. LITHONIA # LQM-S-1-R-120-ELN	120	1	20	LED	WALL/SURFACE	
F 320	HEAVY DUTY HIGH BAY 250W MH PENDANT MOUNT, WITH STANDBY LAMP, POWERHOOK AND SAFETY CHAIN. HOLOPHONE CAT # PRSL-250PP-MT-PD-M35	208	1	250	MH	PENDANT	
G 10	EMERGENCY LIGHT, TWIN LAMP, SELF CONTAINED MAINTENANCE FREE BATTERY, 120V SURFACE MOUNT. HOLOPHONE NAVIGATOR SERIES, CORTEZ A2 CAT # CZA2B	120	2	5	PER MFR	WALL/SURFACE	
H 90	48" DEEP CELL PARABOLIC FLUORESCENT FIXTURE. T8 LAMPS AND LOW-PROFILE ELECTRONIC BALLASTS. LITHONIA # 2PM4-G-B-3-32-18LD-MVOLT-1/3-GEB101S	120	3	32	FLUORESCENT T8	CEILING	
I 90	SAME AS TYPE H EXCEPT W/300 LUMEN EMERGENCY POWER PACK	120	3	32	FLUORESCENT T8	CEILING	
J 320	POLE MOUNTED OUTDOOR AREA LIGHTING FIXTURE WITH ALUMINUM HOUSING AND ANODIZED ALUMINUM REFLECTOR. FULLY GASKETED DOOR FRAME WITH TEMPERED GLASS LENSWITH MULTI-TAP BALLAST. LITHONIA MODEL # KAD-250S-R4-TB-LPI	120	1	250	HPS	POLE	MOUNT FIXTURE ON 20' STRAIGHT SQUARE STEEL POLE, LITHONIA MODEL SSS-20-4G-DM19-DDB. CONFIRM 1@90 DRILL TEMPLATE REQUIREMENTS WITH MANUFACTURER PRIOR TO ORDER. POLES WITH CAMERA SHALL BE PREDRILLED FOR MOUNTING SECURITY CAMERA
K 320	SAME AS TYPE J EXCEPT WITH HOUSE SIDE SHIELD LITHONIA MODEL # KAD-250S-R4-TB-LPI-HS	120	1	250	HPS	POLE	MOUNT FIXTURE ON 20' STRAIGHT SQUARE STEEL POLE, LITHONIA MODEL SSS-20-4G-DM19-DDB. CONFIRM 1@90 DRILL TEMPLATE REQUIREMENTS WITH MANUFACTURER PRIOR TO ORDER. POLES WITH CAMERA SHALL BE PREDRILLED FOR MOUNTING SECURITY CAMERA
L 85	RECESSED CANOPY LIGHT WITH GASKETED DOOR FRAME, PRISMATIC POLYCARBONATE LENS, AND UL LISTED FOR WET LOCATIONS COOPER LIGHTING FAIL-SAFE MODEL # FRR-70S-UNV	120	1	70	HPS	RECESSED	
M 640	SAME AS TYPE J EXCEPT WITH DOUBLE FIXTURE CONFIGURATION	120	2	250	HPS	POLE	MOUNT FIXTURE ON 20' STRAIGHT SQUARE STEEL POLE, LITHONIA MODEL SSS-20-4G-DDB. CONFIRM 2@180 DRILL TEMPLATE REQUIREMENTS WITH MANUFACTURER PRIOR TO ORDER.

FILENAME: 6232-E002.dwg LAST UPDATED: 01/18/2012 09:49 AM LAST SAVED BY: ypsee

No.	DATE	REVISIONS	APPROVED

DESIGNED: YPS
DRAWN: YPS
CHECKED: RVT

RBF CONSULTING

carollo

IRVINE RANCH WATER DISTRICT

RHONDA V. TIEJERINA REE NO. 15473 ELECTRICAL ENGINEER DATE
CINDY MILLER RCE NO. 58116 PROJECT MANAGER DATE
PATRICIA UEMATSU RCE NO. 36762 PRINCIPAL ENGINEER DATE

IRVINE RANCH WATER DISTRICT
BAKER WATER TREATMENT PLANT
PROJECT NO. 11218

FIXTURE SCHEDULE

DRAWING E002

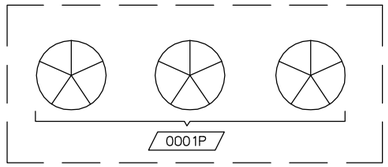

CONDUIT BANK SECTION A
NTS

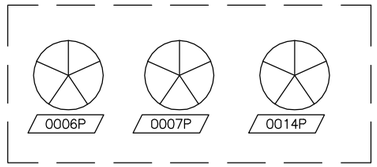

CONDUIT BANK SECTION B
NTS

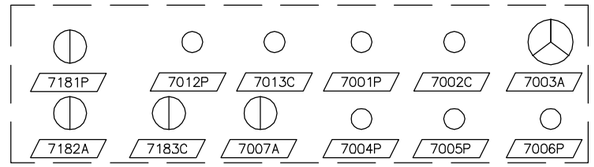

CONDUIT BANK SECTION C
NTS

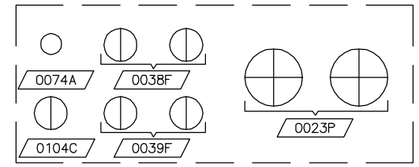

CONDUIT BANK SECTION D
NTS

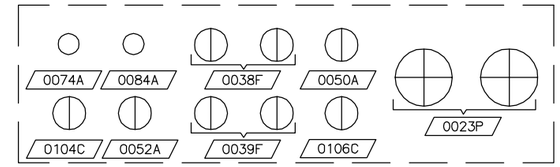

CONDUIT BANK SECTION E
NTS

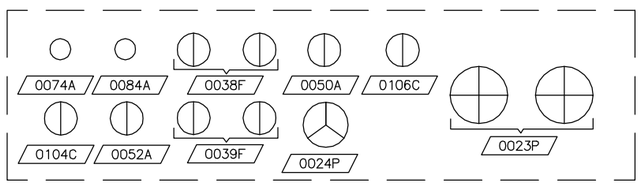

CONDUIT BANK SECTION F
NTS

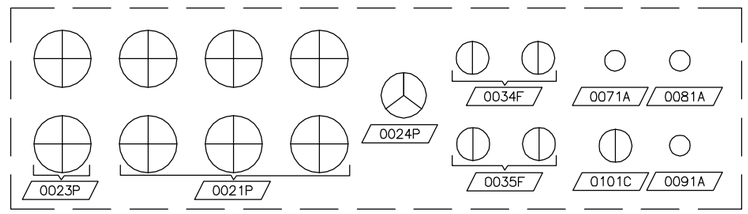

CONDUIT BANK SECTION G
NTS

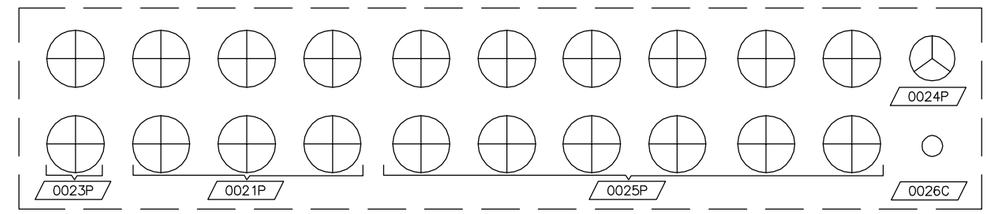

CONDUIT BANK SECTION H
NTS

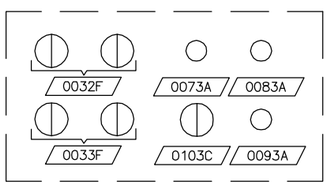

CONDUIT BANK SECTION I
NTS

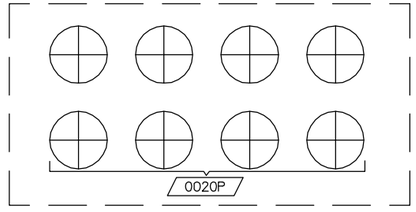

CONDUIT BANK SECTION J
NTS

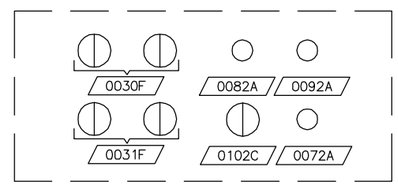

CONDUIT BANK SECTION K
NTS

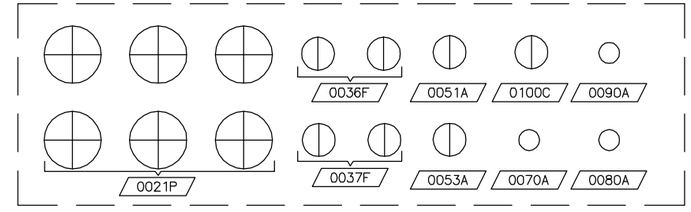

CONDUIT BANK SECTION L
NTS

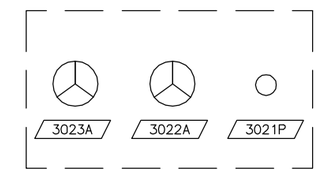

CONDUIT BANK SECTION M
NTS

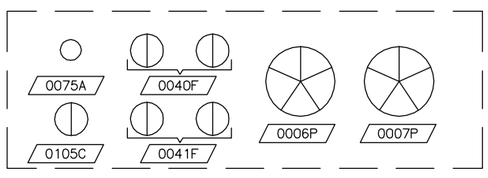

CONDUIT BANK SECTION N
NTS

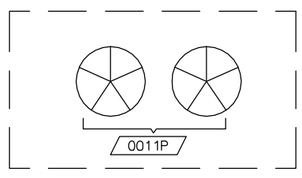

CONDUIT BANK SECTION O
NTS

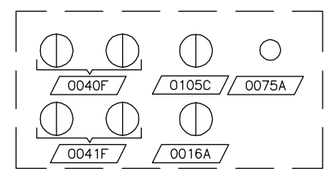

CONDUIT BANK SECTION P
NTS

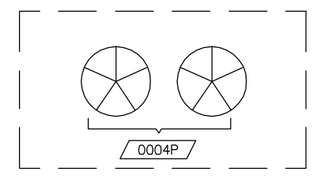

CONDUIT BANK SECTION Q
NTS

CONDUIT LEGEND

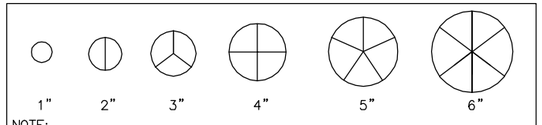

NOTE:
CONDUIT DUCT BANK SECTIONS ARE NOT TO SCALE. MIN. SPACING BETWEEN CONDUIT SHALL BE 2" UNLESS OTHERWISE NOTED ON PLAN.

FILENAME: 6232-E003.dwg
LAST UPDATED: 01/19/2012 02:43 PM
LAST SAVED BY: ypsee

No.	DATE	REVISIONS	APPROVED

DESIGNED: YPS
DRAWN: YPS
CHECKED: RVT

RBF CONSULTING
carollo
IRVINE RANCH WATER DISTRICT

RHONDA V. TIEJERINA REE NO. 15473 ELECTRICAL ENGINEER DATE
CINDY MILLER RCE NO. 58116 PROJECT MANAGER DATE
PATRICIA UEMATSU RCE NO. 36762 PRINCIPAL ENGINEER DATE

IRVINE RANCH WATER DISTRICT
BAKER WATER TREATMENT PLANT
PROJECT NO. 11218

DUCTBANK DETAILS I

DRAWING **E003**
SHEET **428** OF **632**

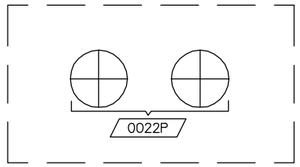

CONDUIT BANK SECTION A –
NTS

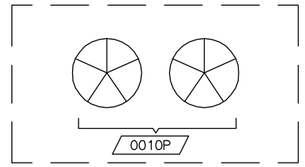

CONDUIT BANK SECTION B –
NTS

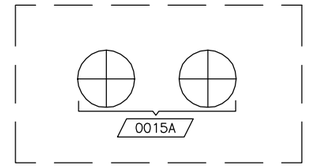

CONDUIT BANK SECTION C –
NTS

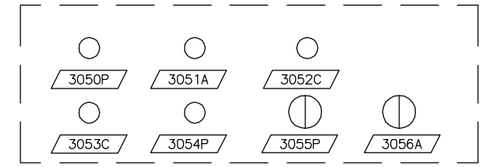

CONDUIT BANK SECTION D –
NTS

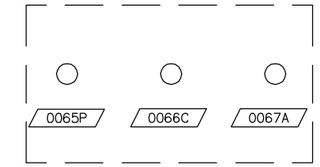

CONDUIT BANK SECTION E –
NTS

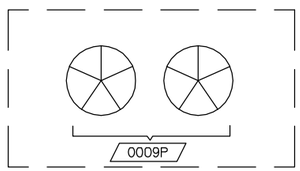

CONDUIT BANK SECTION F –
NTS

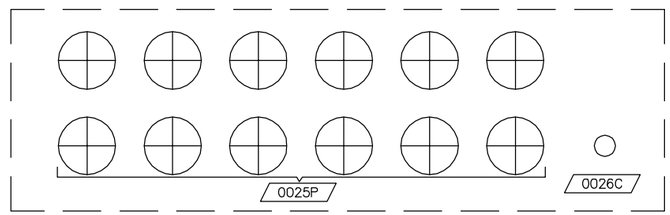

CONDUIT BANK SECTION G –
NTS

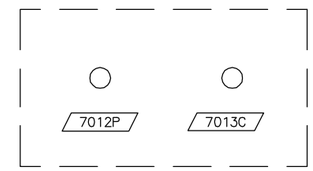

CONDUIT BANK SECTION H –
NTS

CONDUIT LEGEND

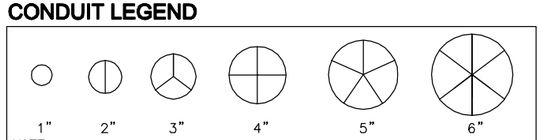

NOTE:
CONDUIT DUCT BANK SECTIONS ARE NOT TO SCALE. MIN. SPACING BETWEEN CONDUIT SHALL BE 2" UNLESS OTHERWISE NOTED ON PLAN.

LAST SAVED BY: ypsee LAST UPDATED: 01/19/2012 02:43 PM FILENAME: 6232-E004.dwg

No.	DATE	REVISIONS	APPROVED

DESIGNED: YPS
DRAWN: YPS
CHECKED: RVT

RBF CONSULTING
carollo
IRVINE RANCH WATER DISTRICT

RHONDA V. TIEJERINA	REE NO. 15473	ELECTRICAL ENGINEER	DATE
CINDY MILLER	RCE NO. 58116	PROJECT MANAGER	DATE
PATRICIA UEMATSU	RCE NO. 36762	PRINCIPAL ENGINEER	DATE

IRVINE RANCH WATER DISTRICT
BAKER WATER TREATMENT PLANT
PROJECT NO. 11218

DUCTBANK DETAILS II

DRAWING **E004**
SHEET **429** OF **632**

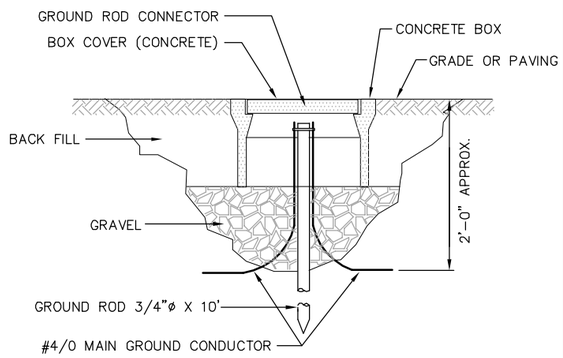

GROUND ROD AND WELL (1 / –)
NTS

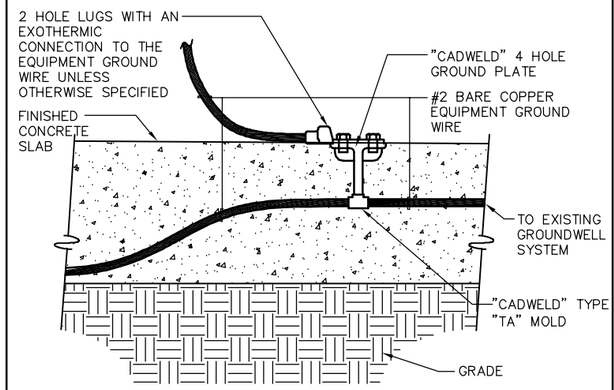

NOTES:

1. "CADWELD" #2 BARE COPPER EQUIPMENT GROUND TO THE GROUNDWELL 4/0 COPPER CABLE WHERE #2 WIRE PENETRATES THE CONCRETE SLAB
2. ALL GROUND PLATES ARE TO BE FLUSH WITH SURFACE PENETRATED SO AS TO NOT CAUSE A TRIPPING HAZARD. IF FOR ANY REASON THE GROUND PLATE IS NOT INSTALLED FLUSH THE CONTRACTOR SHALL BE REQUIRED AT HIS EXPENSE TO: JACK-HAMMER AND REPOUR CONCRETE; REMOVE AND REINSTALL MASONRY; PAINT; GROUT; RELOCATE EQUIPMENT; PROVIDE TEMPORARY FACILITIES.

EQUIPMENT GROUNDING PLATE DETAIL (2 / –)
NTS

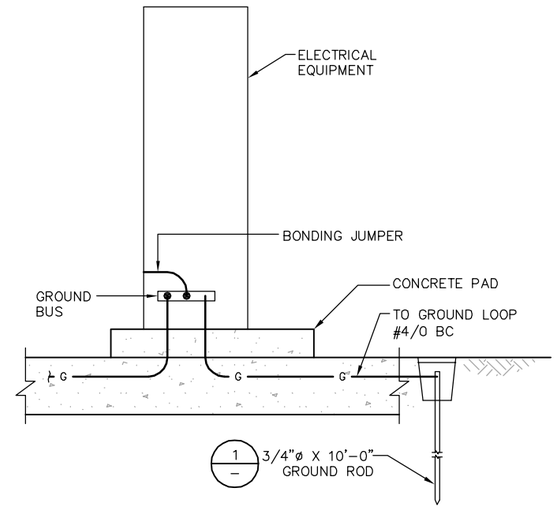

EQUIPMENT GROUNDING (3 / –)
NTS

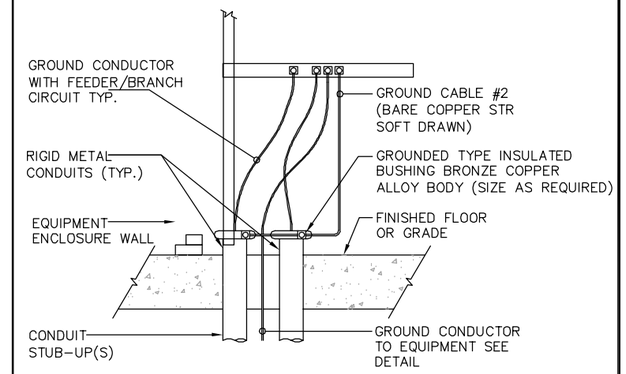

ENCLOSURE GROUNDING DETAIL (4 / –)
NTS

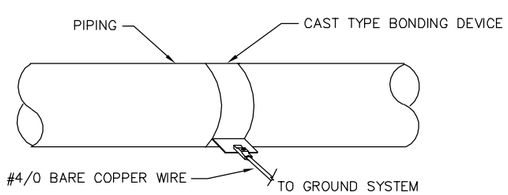

PIPING GROUND BONDING DETAIL (5 / –)
NTS

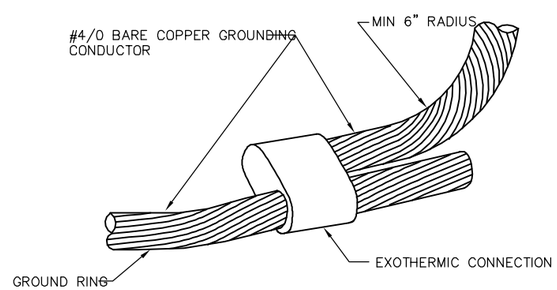

NOTES:

THIS EXOTHERMIC CONNECTION IS USED WITH GROUNDING CONDUCTORS ATTACHED TO THE GROUND RING.

GROUNDING RING EXOTHERMIC CONNECTION (6 / –)
NTS

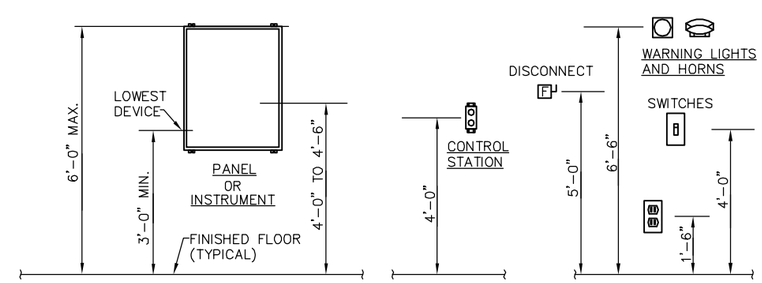

TYPICAL WALL MOUNT EQUIPMENT HEIGHT DETAIL (7 / –)
NTS

FILENAME: 6232-E005.dwg
LAST UPDATED: 01/18/2012 09:52 AM
LAST SAVED BY: ypsee

No.	DATE	REVISIONS	APPROVED

DESIGNED: YPS
DRAWN: YPS
CHECKED: RVT

RBF CONSULTING

carollo

IRVINE RANCH WATER DISTRICT

RHONDA V. TIEJERINA REE NO. 15473 ELECTRICAL ENGINEER DATE
CINDY MILLER RCE NO. 58116 PROJECT MANAGER DATE
PATRICIA UEMATSU RCE NO. 36762 PRINCIPAL ENGINEER DATE

IRVINE RANCH WATER DISTRICT
BAKER WATER TREATMENT PLANT
PROJECT NO. 11218

ELECTRICAL DETAILS I

DRAWING **E005**

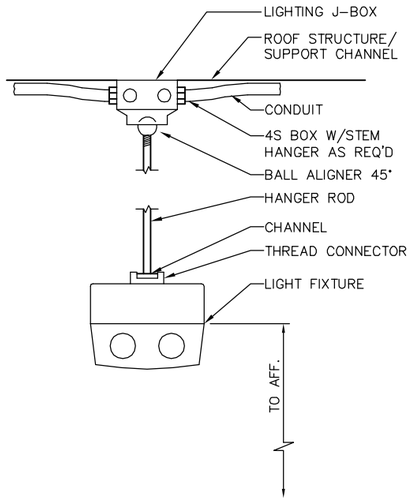

LIGHT MOUNTING DETAIL (1/–)
NTS

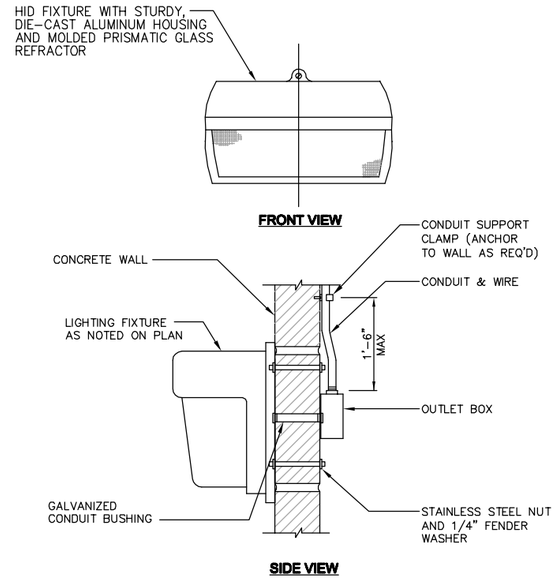

EXTERIOR WALL PACK FIXTURE (2/–)
NTS

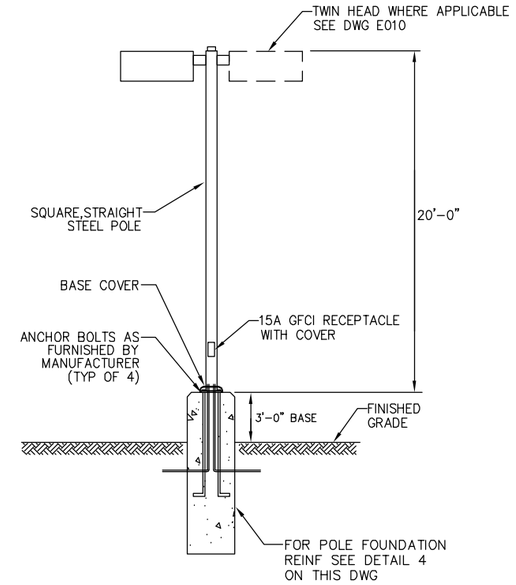

POLE LIGHTING MOUNTING DETAIL (3/–)
NTS

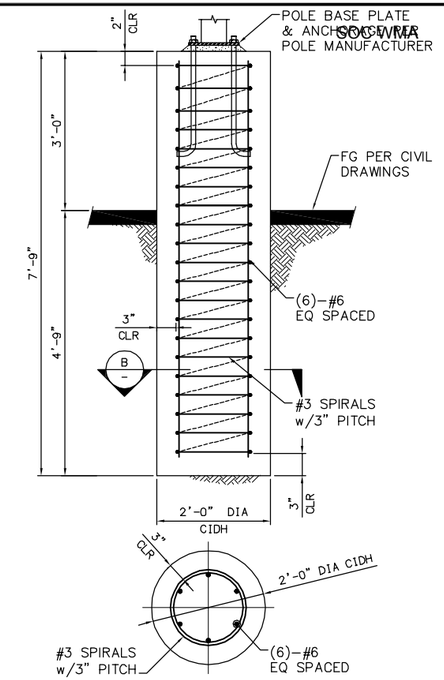

SECTION (B/–)
NTS

POLE LIGHTING FOUNDATION (4/–)
NTS

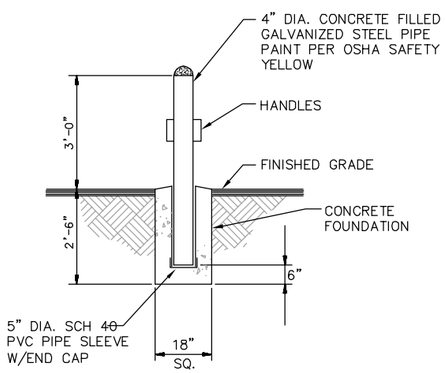

NOTES:

CONTRACTOR TO OBTAIN APPROVAL OF BOLLARD PLACEMENT FROM UTILITY PRIOR TO INSTALLATION.

REMOVABLE GUARD POST DETAIL (5/–)
NTS

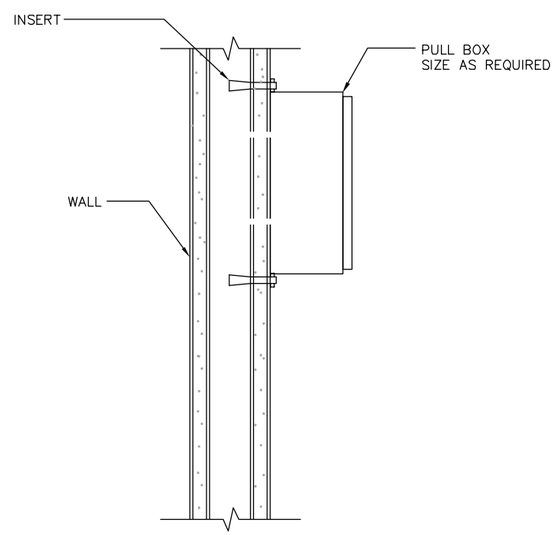

TYPICAL INSTRUMENT WALL MOUNTING (6/–)
NTS

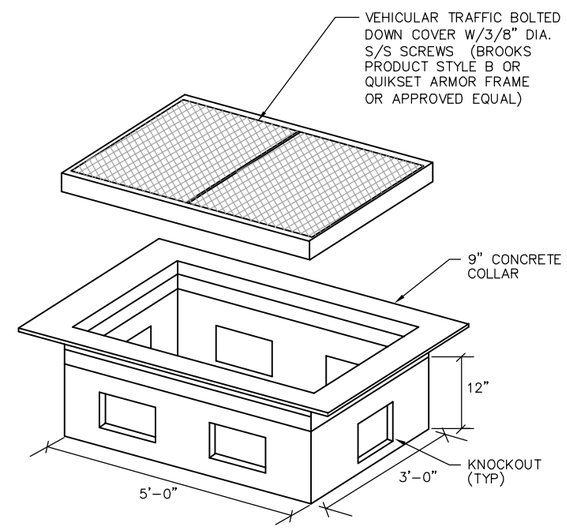

PULL BOX (5' x 3') DETAIL (7/–)
NTS

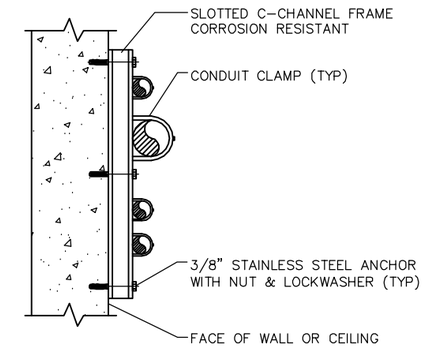

NOTES:

GALVANIZED HARDWARE MAY BE USED IN ABOVE GRADE, INDOOR, DRY LOCATIONS.

WALL OR CEILING MOUNTED CONDUIT DETAIL (8/–)
NTS

LAST SAVED BY: cstelea LAST UPDATED: 01/20/2012 09:47 AM FILENAME: 6232-E006.dwg

No.	DATE	REVISIONS	APPROVED

DESIGNED: YPS
DRAWN: YPS
CHECKED: RVT

RBF CONSULTING

carollo

IRVINE RANCH WATER DISTRICT

RHONDA V. TIEJERINA REE NO. 15473 ELECTRICAL ENGINEER DATE
CINDY MILLER RCE NO. 58116 PROJECT MANAGER DATE
PATRICIA UEMATSU RCE NO. 36762 PRINCIPAL ENGINEER DATE

IRVINE RANCH WATER DISTRICT
BAKER WATER TREATMENT PLANT
PROJECT NO. 11218

ELECTRICAL DETAILS II

DRAWING E006

SHEET 431 OF 632

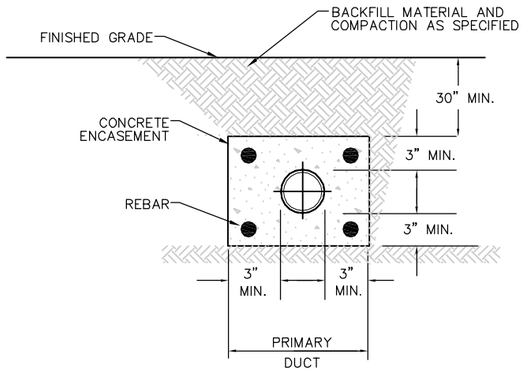

PRIMARY DUCT ENCASEMENT (1 / –)
NTS

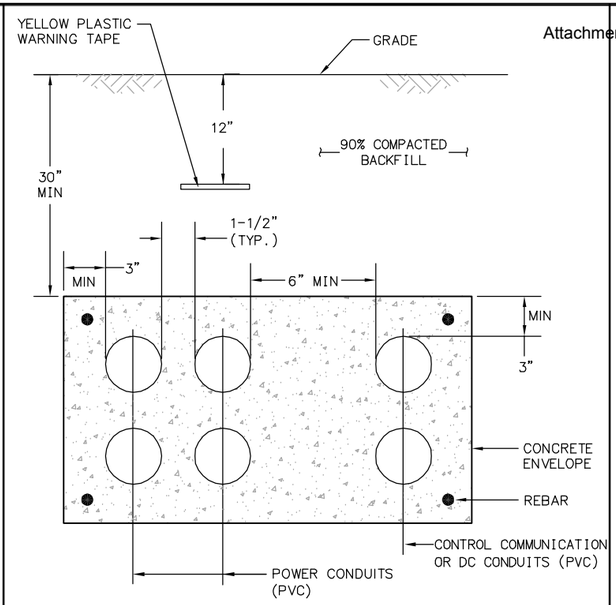

TYPICAL DUCTBANK - POWER & COMMUNICATION CONDUIT (2 / –)
NTS

LAST SAVED BY: ypsee LAST UPDATED: 01/18/2012 09:53 AM FILENAME: 6232-E007.dwg

No.	DATE	REVISIONS	APPROVED

DESIGNED: YPS
DRAWN: YPS
CHECKED: RVT

RBF CONSULTING

carollo

IRVINE RANCH WATER DISTRICT

RHONDA V. TIEJERINA REE NO. 15473 ELECTRICAL ENGINEER DATE
CINDY MILLER RCE NO. 58116 PROJECT MANAGER DATE
PATRICIA UEMATSU RCE NO. 36762 PRINCIPAL ENGINEER DATE

IRVINE RANCH WATER DISTRICT
BAKER WATER TREATMENT PLANT
PROJECT NO. 11218

ELECTRICAL DETAILS III

DRAWING **E007**

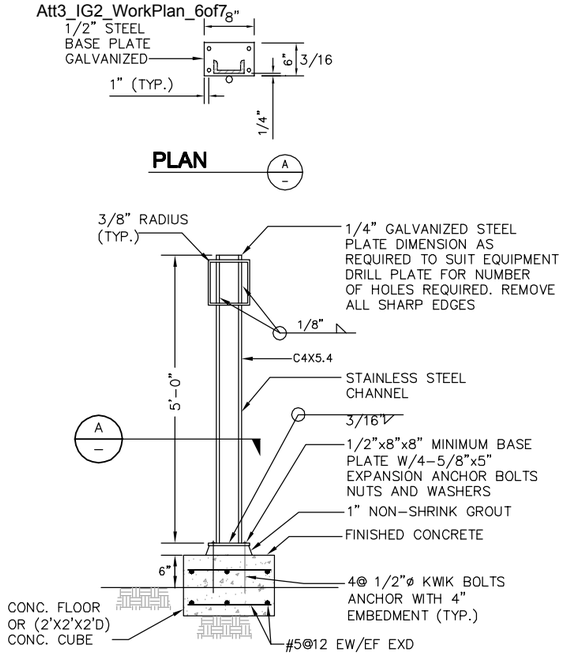

MOUNTING STAND DETAIL (1)
NTS

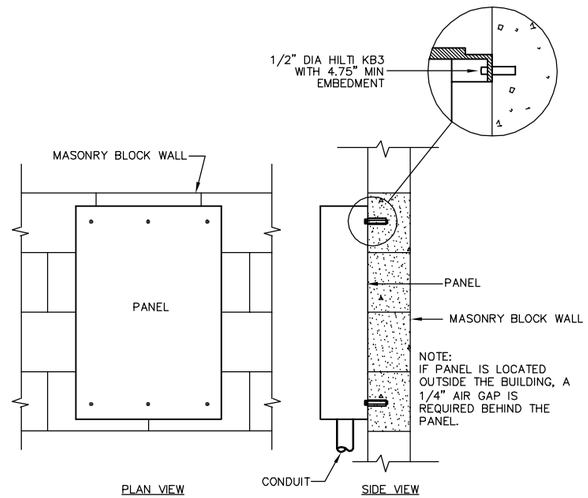

SURFACE MOUNTED PANEL ANCHORAGE DETAIL - MASONRY WALL (2)
NTS

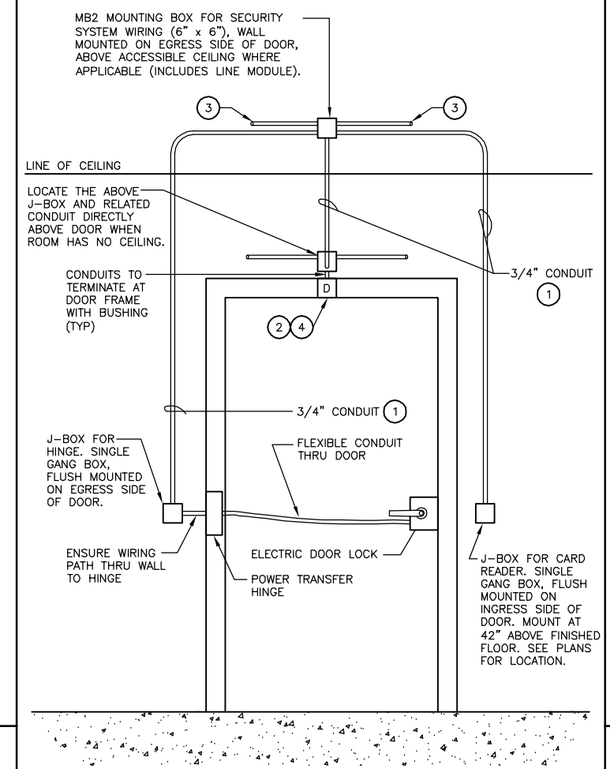

NOTES:

1. CONCEAL CONDUIT IN WALL AT NEW CONSTRUCTION AND AT EXISTING FRAME CONSTRUCTION; SURFACE MOUNT ON INTERIOR FACE AT EXISTING MASONRY.
2. INTRUSION SWITCH PROVIDED AND MOUNTED.
3. SEE PLAN FOR CONTINUATION.
4. INTRUSION SWITCH MOUNTED IN FRAME HEADER, 10" FROM CENTER OF FRAME, TOWARD DOOR STRIKE.

NOTE: CONTRACTOR SHALL INSTALL CONDUIT AND WIRING PER DOOR ACCESS SYSTEM BLOCK DIAGRAM. SEE DRAWING B.

SINGLE DOOR SECURITY SYSTEM (5)
NTS

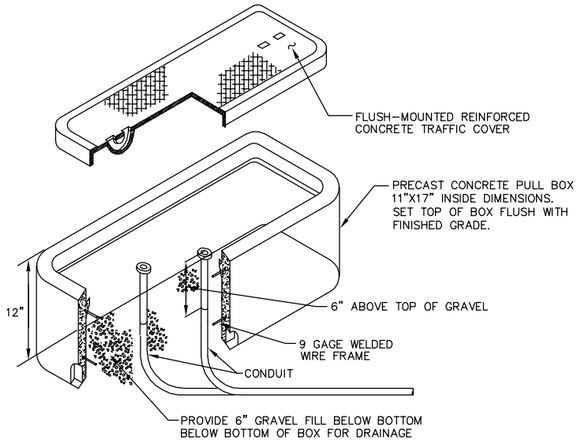

PULLBOX INSTALLATION DETAIL (3)
NTS

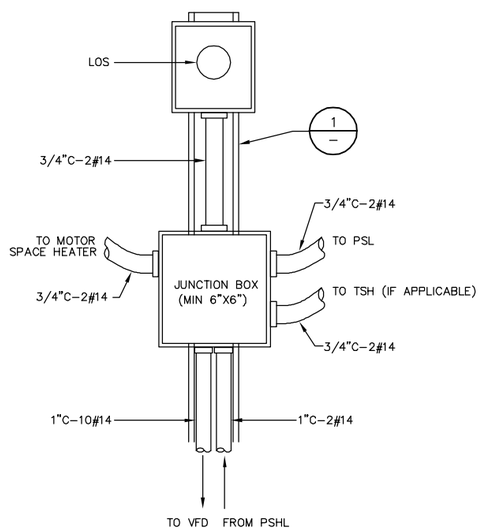

EQUIPMENT MOUNTING DETAIL (4)
NTS

LAST SAVED BY: ypsee LAST UPDATED: 01/19/2012 01:35 PM FILENAME: 6232-E008.dwg

No.	DATE	REVISIONS	APPROVED

DESIGNED: YPS
DRAWN: YPS
CHECKED: RVT

RBF CONSULTING | carollo | IRVINE RANCH WATER DISTRICT

RHONDA V. TIEJERINA	REE NO. 15473	ELECTRICAL ENGINEER	DATE
CINDY MILLER	RCE NO. 58116	PROJECT MANAGER	DATE
PATRICIA UEMATSU	RCE NO. 36762	PRINCIPAL ENGINEER	DATE

IRVINE RANCH WATER DISTRICT
BAKER WATER TREATMENT PLANT
PROJECT NO. 11218

ELECTRICAL DETAILS IV

DRAWING E008
SHEET 433 OF 632

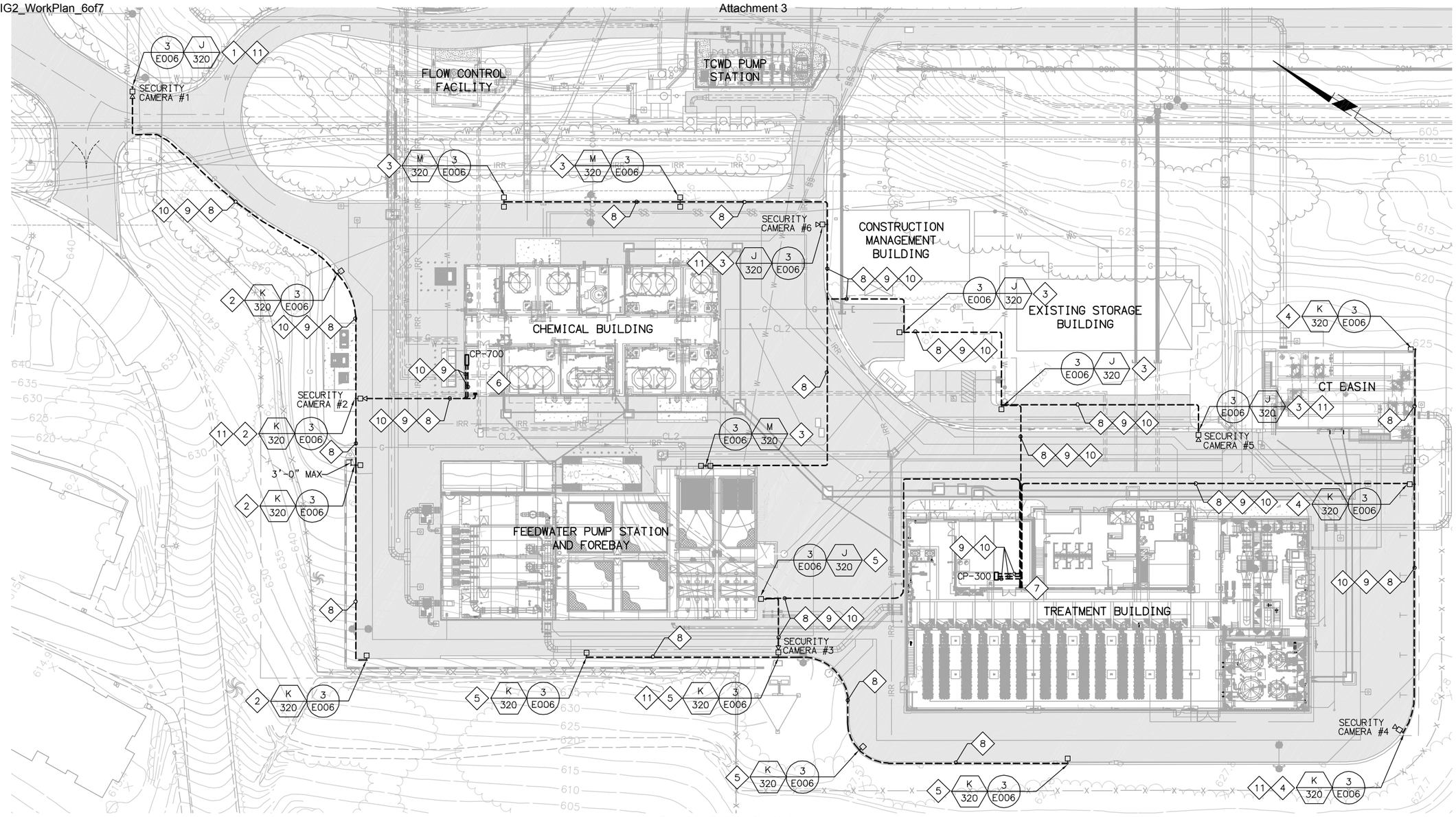

SITE LIGHTING PLAN

SCALE: 1" = 30'-0"

NOTES:

1. PERIMETER LIGHTS ZONE 1
2. PERIMETER LIGHTS ZONE 2
3. PERIMETER LIGHTS ZONE 3
4. PERIMETER LIGHTS ZONE 4
5. PERIMETER LIGHTS ZONE 5
6. LIGHTING CONTROL PANEL LP-700. SEE DWG E019 FOR CONNECTION DIAGRAM.
7. LIGHTING CONTROL PANEL LP-300. SEE DWG E019 FOR CONNECTION DIAGRAM.
8. 1"C - 2#6, 1#6G TO SITE LIGHTS
9. 1"C - 2#8, 1#8G FROM CONTROL PANEL TO SECURITY CAMERA
10. 1"C WITH DATA LINK TO FROM CAMERA TO CONTROL PANEL
11. PAN/TILT/ZOOM SECURITY CAMERA, IVC CAMERA MODEL PTZ-3330-O

No.	DATE	REVISIONS	APPROVED

DESIGNED: YPS
DRAWN: YPS
CHECKED: RVT

RBF CONSULTING
carollo
IRVINE RANCH WATER DISTRICT

RHONDA V. TIEJERINA REE NO. 15473 ELECTRICAL ENGINEER DATE
CINDY MILLER RCE NO. 58116 PROJECT MANAGER DATE
PATRICIA UEMATSU RCE NO. 36762 PRINCIPAL ENGINEER DATE

IRVINE RANCH WATER DISTRICT
BAKER WATER TREATMENT PLANT
PROJECT NO. 11218

SITE LIGHTING PLAN

DRAWING E010
SHEET 434 OF 632

FILENAME: 6232-E010.dwg
LAST UPDATED: 01/30/2012 11:40 AM
LAST SAVED BY: ypsse

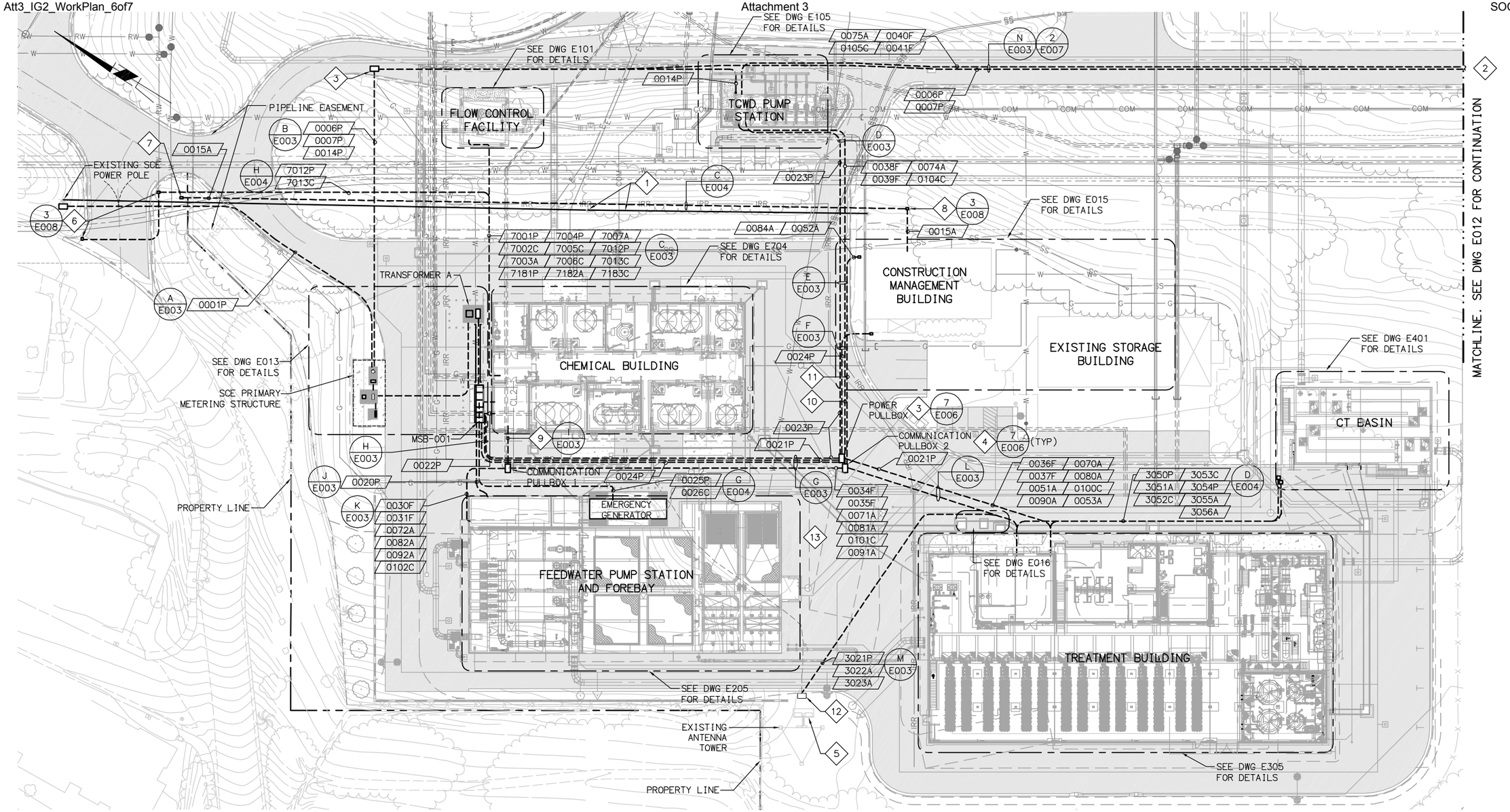

OVERALL SITE PLAN

SCALE: 1" = 30'-0"

NOTES:

1. EXISTING SCE POWER POLES AND OVERHEAD TO BE REMOVED. CONTRACTOR TO COORDINATE WITH SCE AND IRWD PRIOR TO REMOVAL
2. SEE DWG E012 FOR CONTINUATION.
3. CONTRACTOR TO PROVIDE AND INSTALL A 3'-0"W X 5'-0"L POWER PULLBOX AS SHOWN.
4. CONTRACTOR TO PROVIDE AND INSTALL A 3'-0"W X 5'-0"L FIBER OPTIC PULLBOX AS SHOWN.
5. EXISTING ANTENNA TOWER CONTROL PANEL.
6. ROUTE 1" CONDUIT FROM ELECTRIC GATE TO CARD READER. GATE SUPPLIER SHALL PROVIDE, FURNISH AND INSTALL ALL NECESSARY CONTROL, LOOP DETECTOR & WIRING FOR CARD READER AND ELECTRIC GATE.
7. EXISTING AT&T TELEPHONE PEDESTAL. CONTRACTOR TO FIELD VERIFY LOCATION.
8. PROVIDE AND INSTALL NEW TELEPHONE PULL BOX AS SHOWN.
9. 0032F / 0033F / 0073A / 0083A / 0093A / 0103C
10. 0038F / 0039F / 0074A / 0084A / 0104C / 0052A
11. 0050A / 0052A / 0106C
12. EXISTING PULL BOX. CONTRACTOR TO ROUTE CONDUIT TO EXISTING ANTENNA TOWER CONTROL PANEL VIA THE PULL BOX. VERIFY LOCATION PRIOR TO INSTALLATION.
13. ALL CONDUIT ROUTING SHOWN ARE DIAGRAMMATIC ONLY. CONDUIT SHALL BE INSTALLED BASED ON FIELD CONDITIONS. FIELD RELOCATE IF REQUIRED. CONTRACTOR TO SUBMIT CONDUIT LAYOUT FOR ENGINEER APPROVAL PRIOR TO INSTALLATION.

No.	DATE	REVISIONS	APPROVED

DESIGNED: YPS
DRAWN: YPS
CHECKED: RVT

RBF CONSULTING

carollo

IRVINE RANCH WATER DISTRICT

RHONDA V. TIEJERINA REE NO. 15473 ELECTRICAL ENGINEER DATE
CINDY MILLER RCE NO. 58116 PROJECT MANAGER DATE
PATRICIA UEMATSU RCE NO. 36762 PRINCIPAL ENGINEER DATE

IRVINE RANCH WATER DISTRICT
BAKER WATER TREATMENT PLANT
PROJECT NO. 11218

OVERALL SITE PLAN 1

DRAWING E011

LAST SAVED BY: ypsee LAST UPDATED: 01/23/2012 01:41 PM FILENAME: 6232-E011.dwg

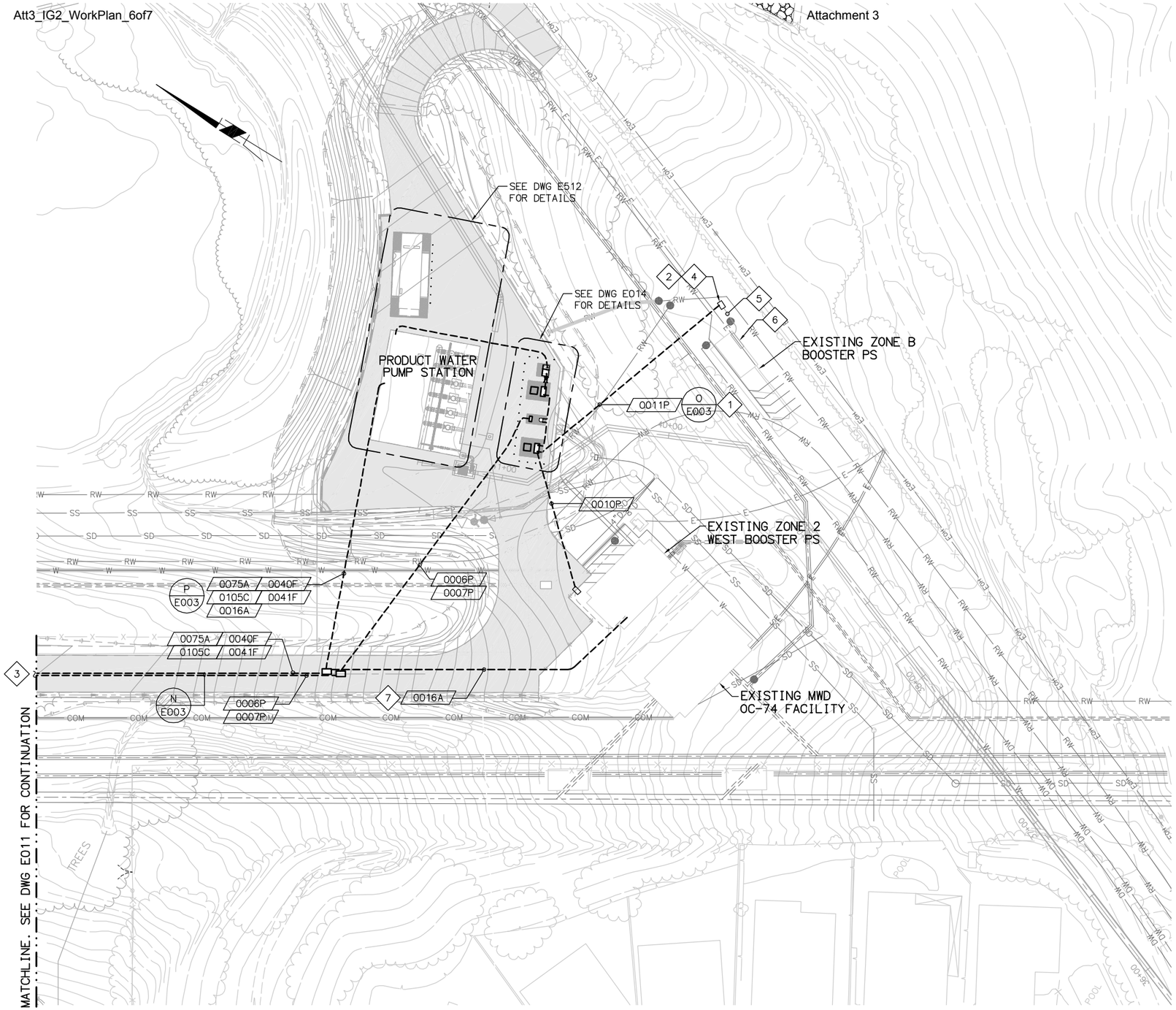

OVERALL SITE PLAN

SCALE: 1" = 30'-0"

NOTES:

1. CONTRACTOR TO ROUTE NEW CONDUIT FROM TRANSFORMER C TO EXISTING SCE PULL BOX. VERIFY LOCATION PRIOR TO INSTALLATION.
2. 2'-6" x 4' PULL BOX PER SCE STANDARD HP-220
3. SEE DWG E011 FOR CONTINUATION.
4. SCE TO INTERCEPT EXISTING WIRING & RECONNECT TO EXISTING ZONE B PUMP STATION SWITCHBOARD.
5. EXISTING CONDUIT. WIRING BY SCE.
6. EXISTING ZONE B BOOSTER PUMP STATION SWITCHBOARD. SCE TO RECONNECT & REMOVE EXISTING METER. CONTRACTOR TO INSTALL NEW METER IN EXISTING SWITCHBOARD.
7. 1-2" CONDUIT FOR SCADA. FROM EXISTING ZONE 2 WEST BOOSTER PS TO PRODUCT WATER PUMP STATION.

LAST SAVED BY: ypsee LAST UPDATED: 01/19/2012 10:18 AM FILENAME: 6232-E012.dwg

No.	DATE	REVISIONS	APPROVED

DESIGNED: YPS
DRAWN: YPS
CHECKED: RVT

RBF CONSULTING

carollo

IRVINE RANCH WATER DISTRICT

RHONDA V. TIEJERINA REE NO. 15473 ELECTRICAL ENGINEER DATE
CINDY MILLER RCE NO. 58116 PROJECT MANAGER DATE
PATRICIA UEMATSU RCE NO. 36762 PRINCIPAL ENGINEER DATE

IRVINE RANCH WATER DISTRICT
BAKER WATER TREATMENT PLANT
PROJECT NO. 11218

OVERALL SITE PLAN 2

DRAWING **E012**

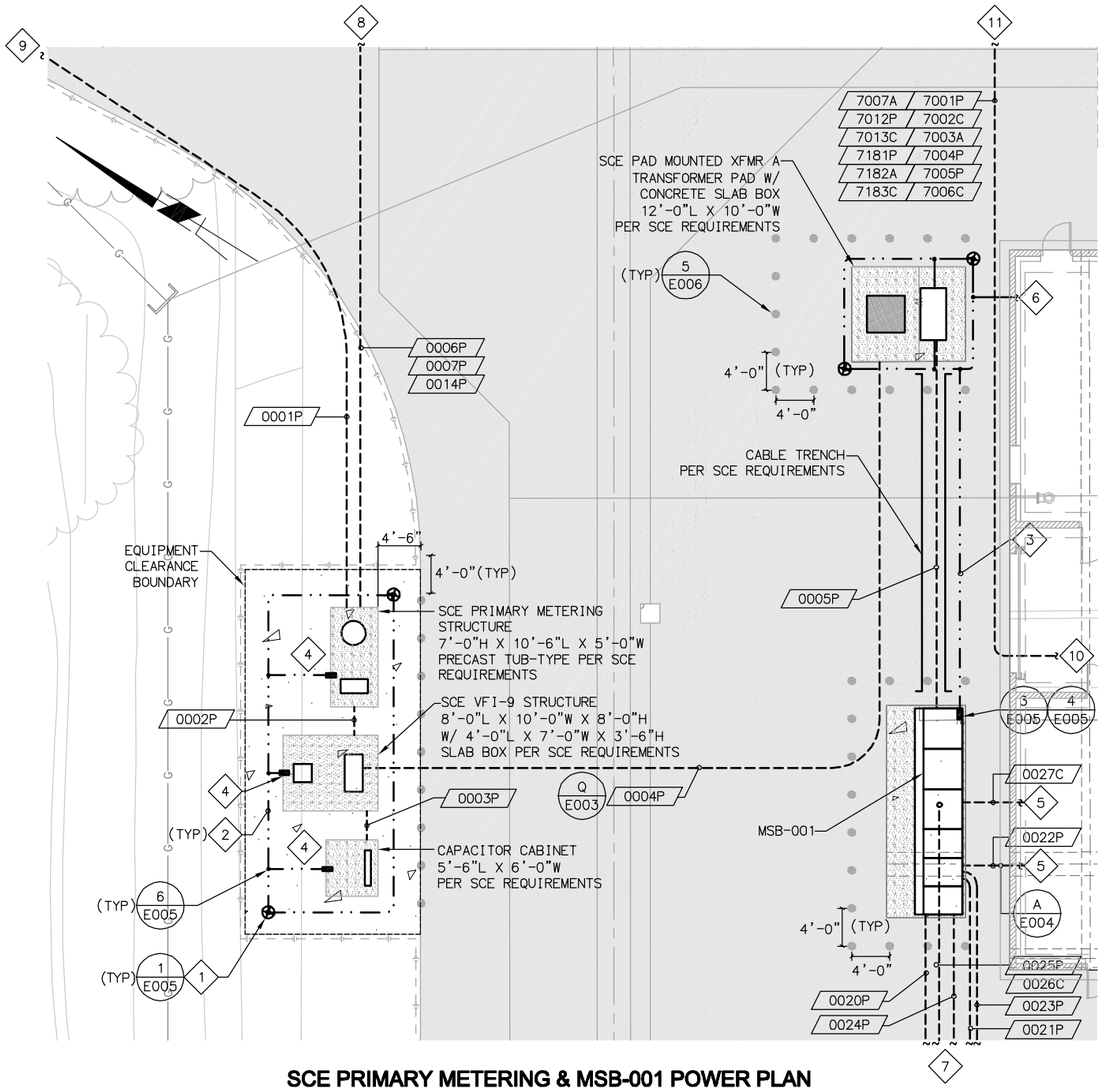

SCE PRIMARY METERING & MSB-001 POWER PLAN

SCALE: 1/8" = 1'-0"

NOTES:

1. PROVIDE A CAST IRON LID FOR GROUND ROD WELLS.
2. #4/0 BARE COPPER GROUNDING CONDUCTOR.
3. ROUTE #4/0 GROUNDING WIRE AND CONNECT TO MSB-001.
4. ROUTE #4/0 GROUNDING WIRE TO PMH STRUCTURE, CAPACITOR CABINET AND VFI-9 STRUCTURE.
5. TO MCC-700 IN CHEMICAL BUILDING. SEE DWG E704 FOR CONTINUATION.
6. ROUTE #4/0 GROUNDING WIRE TO CHEMICAL BUILDING GROUNDING SYSTEM. SEE DWG E706 FOR CONTINUATION.
7. SEE DWG E011 FOR CONTINUATION.
8. TO SCE PME STRUCTURE AT PRODUCT WATER PUMP STATION. SEE DWG E011 FOR CONTINUATION.
9. TO SCE POINT OF CONNECTION. SEE DWG E011 FOR CONTINUATION.
10. TO CHEMICAL BUILDING PANEL-700 & CP-700. SEE DWG E704 FOR CONTINUATION.
11. TO FLOW CONTROL FACILITY. SEE DWG E011 FOR CONTINUATION.

FILENAME: 6232-E013.dwg
LAST UPDATED: 01/23/2012 01:17 PM
LAST SAVED BY: ypsee

No.	DATE	REVISIONS	APPROVED

DESIGNED: YPS
DRAWN: YPS
CHECKED: RVT

RBF CONSULTING
carollo
IRVINE RANCH WATER DISTRICT

RHONDA V. TIEJERINA REE NO. 15473 ELECTRICAL ENGINEER DATE
CINDY MILLER RCE NO. 58116 PROJECT MANAGER DATE
PATRICIA UEMATSU RCE NO. 36762 PRINCIPAL ENGINEER DATE

IRVINE RANCH WATER DISTRICT
BAKER WATER TREATMENT PLANT
PROJECT NO. 11218

SCE INFRASTRUCTURE 1

DRAWING **E013**
SHEET **437** OF **632**

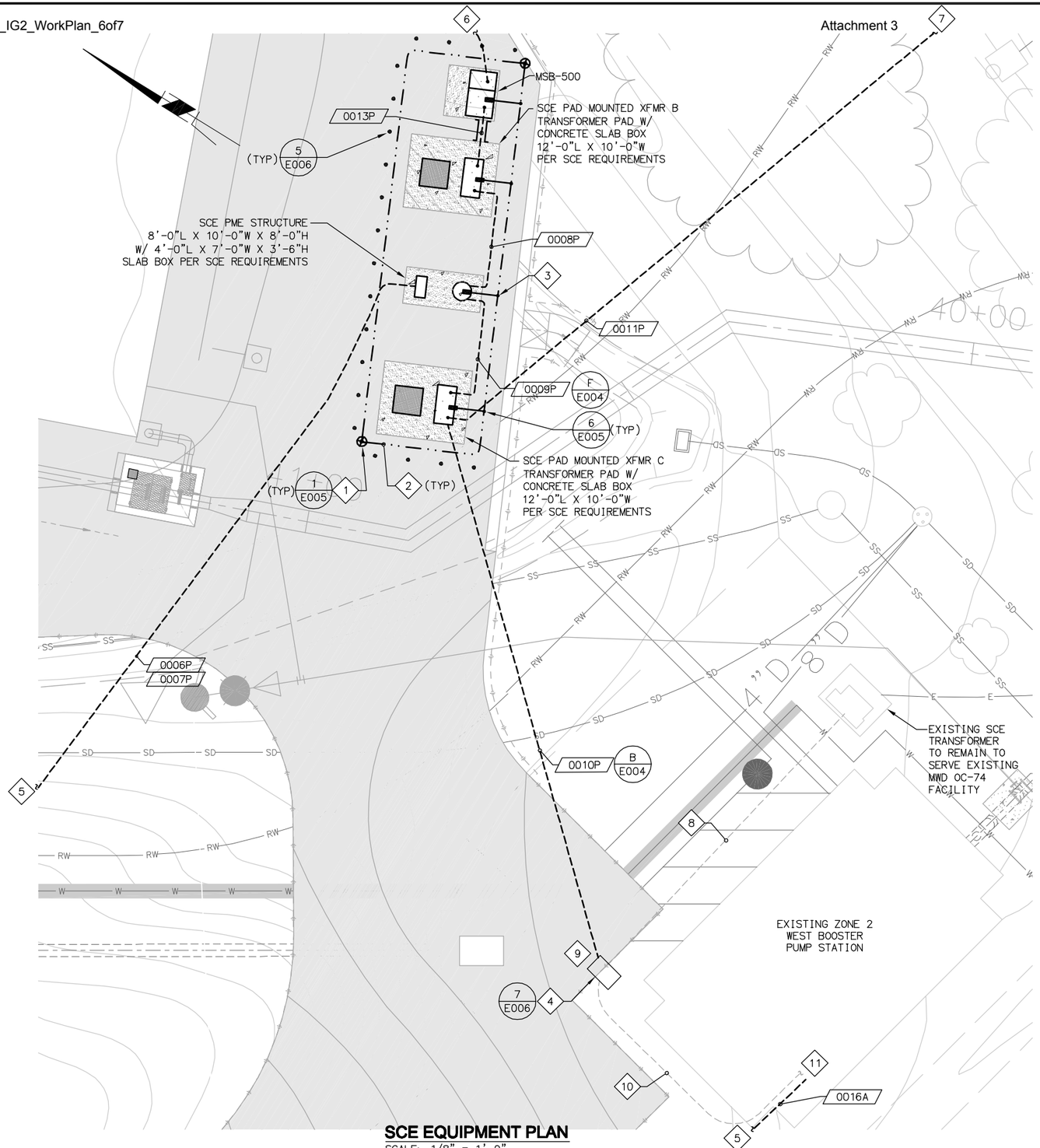

SCE EQUIPMENT PLAN

SCALE: 1/8" = 1'-0"

NOTES:

1. PROVIDE A CAST IRON LID FOR GROUND ROD WELLS.
2. #4/0 BARE COPPER GROUNDING CONDUCTOR.
3. ROUTE #4/0 GROUNDING WIRE TO PME STRUCTURE 2.
4. CONTRACTOR TO PROVIDE AND INSTALL A 3'-0"W X 5'-0"L POWER PULL BOX AS SHOWN.
5. SEE DWG E012 FOR CONTINUATION.
6. TO PRODUCT WATER PUMP STATION. SEE DWG E012 FOR CONTINUATION.
7. TO EXISTING ZONE B BOOSTER PUMP STATION (VIA NEW SCE POWER PULLBOX). SEE DWG E012 FOR CONTINUATION.
8. EXISTING 4" POWER CONDUITS WITH WIRING TO BE ABANDONED.
9. CONTRACTOR TO INSTALL 2-5" CONDUIT ONLY AND INTERCEPT EXISTING POWER CONDUIT AS SHOWN. VERIFY LOCATION PRIOR TO CONDUIT INTERCEPTION.
10. EXISTING CONDUIT WITH NEW WIRING (PROVIDED AND INSTALLED BY SCE).
11. TO EXISTING ZONE 2 WEST BOOSTER PUMP STATION SWITCHBOARD & CONTROL PANEL. SCE TO RECONNECT & REMOVE EXISTING METER. CONTRACTOR TO INSTALL NEW METER IN SWITCHBOARD.

LAST SAVED BY: ypsee LAST UPDATED: 01/23/2012 09:40 AM FILENAME: 6232-E014.dwg

No.	DATE	REVISIONS	APPROVED

DESIGNED: YPS
DRAWN: YPS
CHECKED: RVT

RBF CONSULTING

carollo

IRVINE RANCH WATER DISTRICT

RHONDA V. TIEJERINA REE NO. 15473 ELECTRICAL ENGINEER DATE
CINDY MILLER RCE NO. 58116 PROJECT MANAGER DATE
PATRICIA UEMATSU RCE NO. 36762 PRINCIPAL ENGINEER DATE

IRVINE RANCH WATER DISTRICT
BAKER WATER TREATMENT PLANT
PROJECT NO. 11218

SCE INFRASTRUCTURE 2

DRAWING **E014**

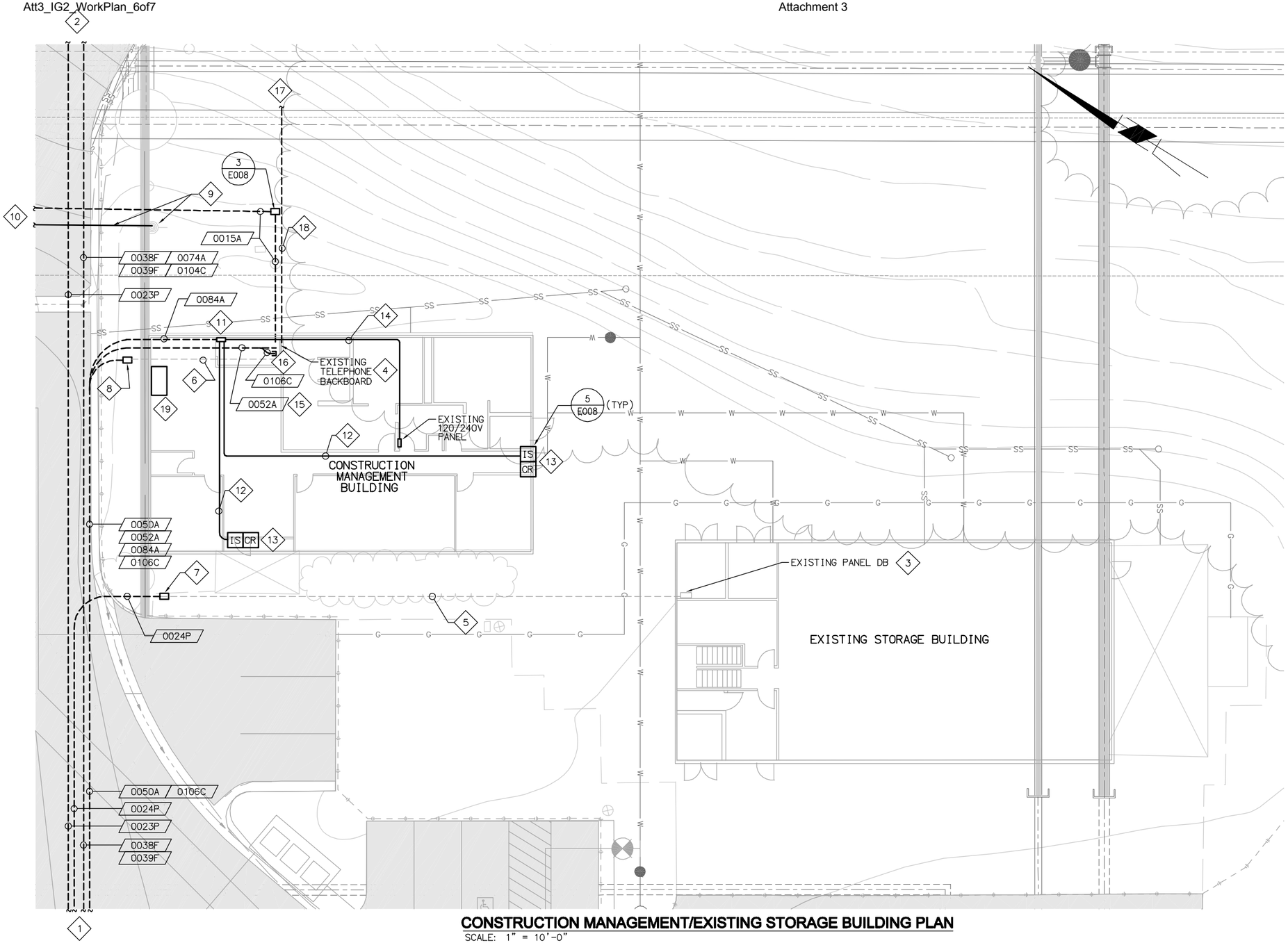

CONSTRUCTION MANAGEMENT/EXISTING STORAGE BUILDING PLAN

SCALE: 1" = 10'-0"

NOTES:

1. TO POWER PULLBOX AND COMMUNICATION PULLBOX 2. SEE DWG E011 FOR CONTINUATION.
2. TO TCWD PUMP STATION. SEE DWG E011 FOR CONTINUATION.
3. EXISTING 480V 3PH PANEL DB LOCATED IN THE STORAGE BUILDING. CONTRACTOR TO VERIFY LOCATION PRIOR TO INSTALLATION.
4. EXISTING TELEPHONE BACKBOARD LOCATION IN THE CONSTRUCTION MANAGEMENT BUILDING. CONTRACTOR TO VERIFY LOCATION PRIOR TO INSTALLATION.
5. EXISTING 3" POWER CONDUIT TO PANEL DB. CONTRACTOR TO VERIFY LOCATION PRIOR TO INSTALLATION.
6. EXISTING 2" COMMUNICATION CONDUIT TO TELEPHONE BACKBOARD. CONTRACTOR TO VERIFY LOCATION PRIOR TO INSTALLATION.
7. CONTRACTOR TO INTERCEPT EXISTING POWER CONDUIT WITH PULL BOX AS SHOWN AND EXTEND NEW WIRING TO PANEL DB. VERIFY LOCATION PRIOR TO INSTALLATION.
8. CONTRACTOR TO INTERCEPT EXISTING COMMUNICATION CONDUIT AS SHOWN. VERIFY LOCATION PRIOR TO INSTALLATION.
9. EXISTING SCE POWER POLE AND OVERHEAD TO BE REMOVED.
10. SEE DWG E011 FOR CONTINUATION.
11. PROVIDE AND INSTALL A SECURITY CONTROL PANEL AS SHOWN. THE SECURITY CONTROL PANEL SHALL CONSISTS OF HIRSCH CONTROLLER. SEE DWG E020 FOR CONTROL BLOCK DIAGRAM. CONTROL PANEL SHALL BE INSTALLED BASED ON FIELD CONDITIONS. FIELD RELOCATE IF REQUIRED.
12. 1"C WITH POWER WIRING & 1"C WITH SHIELDED WIRING. SEE DWG E020 FOR WIRE REQUIREMENTS.
13. HIRSCH DOOR ACCESS MODULE. SEE DWG E020 FOR DETAILS.
14. ROUTE 1"C WITH 2#10, 1#10G FROM SECURITY CONTROL PANEL TO EXISTING 120/240V PANEL AS SHOWN. VERIFY LOCATION PRIOR TO INSTALLATION.
15. FROM TELEPHONE CABINET LOCATED IN CONTROL ROOM AT TREATMENT BUILDING. SEE DWG E318 FOR CONTINUATION.
16. STUB UP CONDUIT MIN 6" AFF AND CAP OFF END.
17. TO EXISTING ZONE A RESERVOIR 1 & 2, CLEAR WELL 1 & 2 AND EXISTING ZONE 2 WEST BOOSTER PUMP STATION.
18. EXISTING CONDUIT TO REMAIN. CONTRACTOR TO VERIFY LOCATION AND PROTECT IN PLACE DURING CONSTRUCTION.
19. SCADA WORK STATION. CONTRACTOR TO VERIFY LOCATION PRIOR TO INSTALLATION.

LAST SAVED BY: ypsee LAST UPDATED: 01/18/2012 10:34 AM FILENAME: 6232-E015.dwg

No.	DATE	REVISIONS	APPROVED

DESIGNED: YPS
DRAWN: YPS
CHECKED: RVT

RBF CONSULTING

carollo

IRVINE RANCH WATER DISTRICT

RHONDA V. TIEJERINA REE NO. 15473 ELECTRICAL ENGINEER DATE
CINDY MILLER RCE NO. 58116 PROJECT MANAGER DATE
PATRICIA UEMATSU RCE NO. 36762 PRINCIPAL ENGINEER DATE

IRVINE RANCH WATER DISTRICT
BAKER WATER TREATMENT PLANT
PROJECT NO. 11218

CONSTRUCTION MANAGEMENT/ EXISTING STORAGE BUILDING

DRAWING E015

CONDUIT SCHEDULE

PLAN SYMBOL #	CONDUIT QTY	CONDUIT SIZE	CONDUCTOR QTY.& SIZE	CONDUCTOR INSULATION RATING	LOCATION FROM	LOCATION TO	LOCATION DWG. NOS	REMARKS
0001P	3	5"	CONDUIT ONLY		SCE POINT OF CONNECTION	SCE PMH STRUCTURE	E011,E013	
0002P	6	5"	CONDUIT ONLY		SCE PMH STRUCTURE	SCE VFI-9 STRUCTURE	E013	
0003P	1	5"	CONDUIT ONLY		SCE VFI-9 STRUCTURE	CAPACITOR CABINET	E013	
0004P	2	5"	CONDUIT ONLY		SCE VFI-9 STRUCTURE	PAD MOUNTED XFMR A	E013	
0005P	1	-	CABLE TRENCH ONLY		PAD MOUNTED XFMR A	MSB-001	E013	
0006P	1	5"	CONDUIT ONLY		SCE PMH STRUCTURE	SCE PME STRUCTURE	E011,E012,E013 E014	
0007P	1	5"	CONDUIT ONLY		SCE PMH STRUCTURE	SCE PME STRUCTURE	E011,E012,E013 E014	SPARE
0008P	2	5"	CONDUIT ONLY		SCE PME STRUCTURE	PAD MOUNTED XFMR B	E012,E014	
0009P	2	5"	CONDUIT ONLY		SCE PME STRUCTURE	PAD MOUNTED XFMR C	E012,E014	
0010P	6	5"	CONDUIT ONLY		PAD MOUNTED XFMR C	ZONE 2 BPS PULLBOX	E012,E014	
0011P	2	5"	CONDUIT ONLY		PAD MOUNTED XFMR C	ZONE B BPS PULLBOX	E012,E014	
0013P	1	-	CABLE TRENCH ONLY		PAD MOUNTED XFMR B	MSB-500	E501,E503	
0014P	1	5"	CONDUIT ONLY		SCE PMH STRUCTURE	TCWD PUMP STATION	E011,E105,E013	
0015A	2	4"	CONDUIT ONLY		EXISTING AT&T PEDESTAL	CONSTRUCTION MANAGEMENT BLDG	E011,E015	
0016A	1	2"	CONDUIT ONLY		EXISTING ZONE 2 WEST PS	PWPS	E012	SCADA
0020P	8	4"	3#600MCM, 1#400MCM G	600V	MSB-001	MCC-200	E201,E205 E208	
0021P	6	4"	3#500MCM, 1#4/0 G		MSB-001	MCC-300	E301,305	
0022P	2	4"	3#500MCM, 1#1 G		MSB-001	MCC-700	E701,E703 E712	
0023P	2	4"	3#500MCM, 1#1 G		MSB-001	MCC-100	E103,E105 E015	
0024P	1	3"	3#4/0, 1#4 G		MSB-001	EXISTING PANEL DB	E011,E015	
0025P	12	4"	3#600MCM, 1#500MCM G		EMERGENCY GENERATOR GEN-001	ATS-001 (MSB-001)	E011,E203 E208,E013	
0026C	1	1"	2#14, 2#14 SPARE		EMERGENCY GENERATOR GEN-001	ATS-001 (MSB-001)	E011,E203 E208,E013	
0027C	1	1"	8#14, 4#14 SPARE		EMERGENCY GENERATOR GEN-001	CP-700A	E013,E704,E712	
0030F	2	2"	FIBER OPTIC CABLE		CP-200A	COMMUNICATION PULLBOX 1	E011, E208	
0031F	2	2"	CONDUIT ONLY		CP-200A	COMMUNICATION PULLBOX 1	E011, E208	SPARE
0032F	2	2"	FIBER OPTIC CABLE		CP-700A	COMMUNICATION PULLBOX 1	E011,E704,E712	
0033F	2	2"	CONDUIT ONLY		CP-700A	COMMUNICATION PULLBOX 1	E011,E704,E712	SPARE
0034F	2	2"	FIBER OPTIC CABLE		COMMUNICATION PULLBOX 1	COMMUNICATION PULLBOX 2	E011	
0035F	2	2"	CONDUIT ONLY		COMMUNICATION PULLBOX 1	COMMUNICATION PULLBOX 2	E011	SPARE
0036F	2	2"	FIBER OPTIC CABLE		COMMUNICATION PULLBOX 2	CP-300A	E011,E305,E308	
0037F	2	2"	CONDUIT ONLY		COMMUNICATION PULLBOX 2	CP-300A	E011,E305,E308	SPARE
0038F	2	2"	FIBER OPTIC CABLE		COMMUNICATION PULLBOX 2	CP-100C	E011, E105	
0039F	2	2"	CONDUIT ONLY		COMMUNICATION PULLBOX 2	CP-100C	E011, E105	SPARE
0040F	2	2"	FIBER OPTIC CABLE		CP-100	CP-500A(VIA COMM. PULLBOX 3)	E011,E12,E513 E105	
0041F	2	2"	CONDUIT ONLY		CP-100	CP-500A(VIA COMM. PULLBOX 3)	E011,E12,E513 E105	SPARE
0050A	1	2"	CONDUIT ONLY		COMMUNICATION PULLBOX 2	CONSTRUCTION MANAGEMENT BLDG	E011	
0051A	1	2"	CONDUIT ONLY		NETWORK RACK 1	COMMUNICATION PULLBOX 2	E011, E309	
0052A	1	2"	DATA LINK		COMMUNICATION PULLBOX 2	CONSTRUCTION MANAGEMENT BLDG	E011	
0053A	1	2"	DATA LINK		TELEPHONE CABINET	COMMUNICATION PULLBOX 2	E011, E318	

CONDUIT SCHEDULE

PLAN SYMBOL #	CONDUIT QTY	CONDUIT SIZE	CONDUCTOR QTY.& SIZE	CONDUCTOR INSULATION RATING	LOCATION FROM	LOCATION TO	LOCATION DWG. NOS	REMARKS
0070A	1	1"	DATA LINK	600V	JOHNSON CONTROL PANEL	COMMUNICATION PULLBOX 2	E011,E308	TREATMENT BLDG
0071A	1	1"	DATA LINK		COMMUNICATION PULLBOX 2	COMMUNICATION PULLBOX 1	E011	
0072A	1	1"	DATA LINK		COMMUNICATION PULLBOX 1	JOHNSON CONTROL PANEL	E011,E205	FWPS BLDG
0073A	1	1"	DATA LINK		COMMUNICATION PULLBOX 1	JOHNSON CONTROL PANEL	E011,E712	CHEMICAL BLDG
0074A	1	1"	DATA LINK		COMMUNICATION PULLBOX 2	JOHNSON CONTROL PANEL	E011,E105	TCWD PS
0075A	1	1"	DATA LINK		TCWD PS JOHNSON CONTROL PNL	JOHNSON CONTROL PANEL	E011,E012	PWPS
0080A	1	1"	DATA LINK		HIRSCH CONTROL PANEL	COMMUNICATION PULLBOX 2	E011,E305,E309	TREATMENT BLDG
0081A	1	1"	DATA LINK		COMMUNICATION PULLBOX 2	COMMUNICATION PULLBOX 1	E011	
0082A	1	1"	DATA LINK		COMMUNICATION PULLBOX 1	HIRSCH CONTROL PANEL	E011,E208	FWPS BLDG
0083A	1	1"	DATA LINK		COMMUNICATION PULLBOX 1	HIRSCH CONTROL PANEL	E011,E712	CHEMICAL BLDG
0084A	1	1"	DATA LINK		COMMUNICATION PULLBOX 2	HIRSCH CONTROL PANEL	E011,E015	ADMIN BLDG
0090A	1	1"	DATA LINK		LP-300	COMMUNICATION PULLBOX 2	E011,E305,3309	TREATMENT BLDG
0091A	1	1"	DATA LINK		COMMUNICATION PULLBOX 2	COMMUNICATION PULLBOX 1	E011	
0092A	1	1"	DATA LINK		COMMUNICATION PULLBOX 1	LP-200	E011,E205,E208	FWPS BLDG
0093A	1	1"	DATA LINK		COMMUNICATION PULLBOX 1	LP-700	E011,E712	CHEMICAL BLDG
0094A	1	1"	DATA LINK		LP-300	NETWORK RACK 1	E309	
0100C	1	2"	CONDUIT ONLY		TREATMENT BLDG	COMMUNICATION PULLBOX 2	E011,E309	
0101C	1	2"	CONDUIT ONLY		COMMUNICATION PULLBOX 2	COMMUNICATION PULLBOX 1	E011	
0102C	1	2"	CONDUIT ONLY		COMMUNICATION PULLBOX 1	FWPS BLDG	E011,E205,E208	
0103C	1	2"	CONDUIT ONLY		COMMUNICATION PULLBOX 1	CHEMICAL BLDG	E011,E704	
0104C	1	2"	CONDUIT ONLY		COMMUNICATION PULLBOX 1	TCWD PS	E011,E105	
0105C	1	2"	CONDUIT ONLY		TCWD PS	PWPS	E011,E012,E105	
0106C	1	2"	CONDUIT ONLY		COMMUNICATION PULLBOX 2	CONSTRUCTION MANAGEMENT BLDG	E011,E015	

CONDUIT NUMBERING SCHEME

AREA NUMBER — 0 001 P — CONDUIT ABBREVIATION

CONDUIT NUMBER

CONDUIT ABBREVIATIONS

- P = POWER
- C = CONTROL
- A = SIGNAL
- F = FIBER OPTIC

AREA NUMBER

- 0 = OVERALL SITE
- 1 = TCWD PS & FCF
- 2 = FWPS/FOREBAY
- 3 = WTP
- 5 = PWPS
- 7 = CHEMICAL

No.	DATE	REVISIONS	APPROVED

DESIGNED: YPS
DRAWN: YPS
CHECKED: RVT

RBF CONSULTING

carollo

IRVINE RANCH WATER DISTRICT

RHONDA V. TIEJERINA REE NO. 15473 ELECTRICAL ENGINEER DATE
CINDY MILLER RCE NO. 58116 PROJECT MANAGER DATE
PATRICIA UEMATSU RCE NO. 36762 PRINCIPAL ENGINEER DATE

IRVINE RANCH WATER DISTRICT
BAKER WATER TREATMENT PLANT
PROJECT NO. 11218

OVERALL SITE
CONDUIT & CABLE SCHEDULES

DRAWING E017
SHEET 441 OF 632

FILENAME:6232-E017.dwg
LAST UPDATED: 01/30/2012 01:33 PM
LAST SAVED BY: ypsee

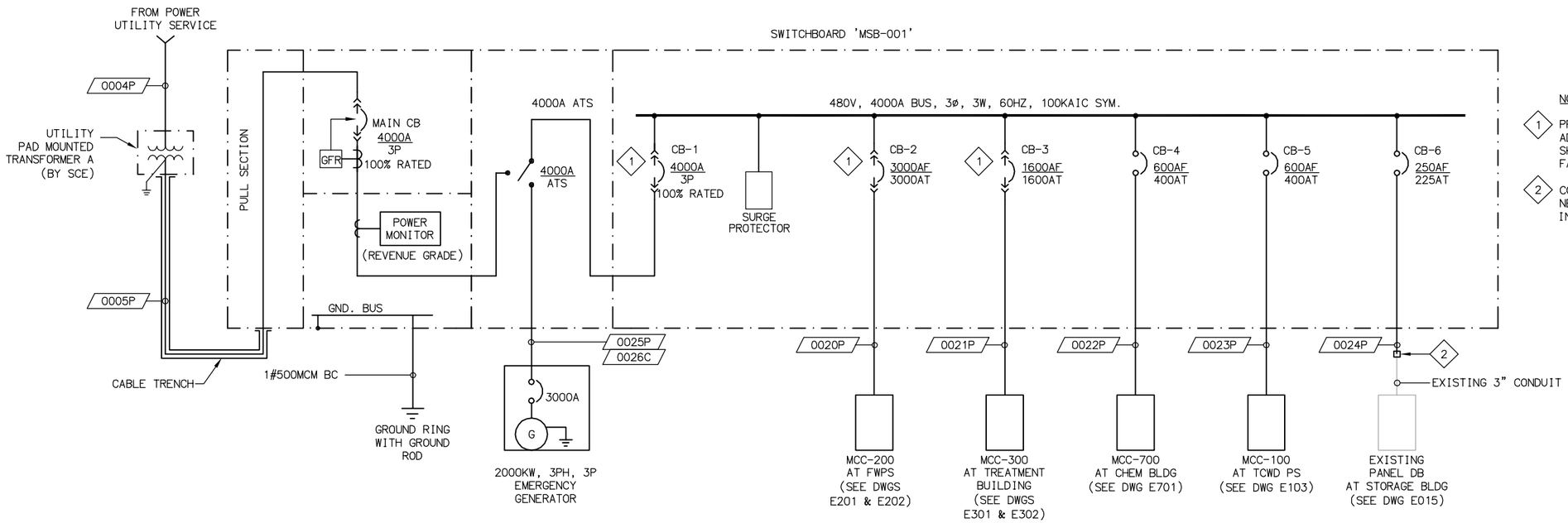

NOTES:

1. PROVIDE BREAKER WITH A MULTI-FUNCTION, SOLID STATE ADJUSTABLE TRIP UNIT WITH LONG TIME, LONG TIME DELAY, SHORT TIME, SHORT TIME DELAY, INSTANTANEOUS AND GROUND FAULT PICK UP AND DELAY FUNCTIONS.
2. CONTRACTOR TO INTERCEPT EXISTING 3" CONDUIT AND EXTEND NEW WIRING TO EXISTING PANEL DB. VERIFY LOCATION PRIOR INSTALLATION. SEE DWG E015 FOR DETAILS

MSB-001 SINGLE LINE DIAGRAM

N.T.S.

MSB-001

LOAD SCHEDULE

EQUIPMENT	HP	F.L. AMPS CONNECTED	F.L. AMPS RUNNING	F.L. AMPS GENERATOR
MCC-200 (AT FWPS)	-	2508.3	2147.3	2024
MCC-300 (AT TREATMENT BLDG)	-	875.4	731	450.2
MCC-700 (AT CHEMICAL BLDG)	-	169	166.9	128.9
MCC-100 (AT TCWD PS)	-	225.4	186.4	170
EXISTING PANEL DB (AT STORAGE BLDG)		200	200	200
TOTAL LOADS		3978.1	3431.6	2973.1

FILENAME: 6232-E018.dwg
LAST UPDATED: 01/19/2012 10:22 AM
LAST SAVED BY: ypsee

No.	DATE	REVISIONS	APPROVED

DESIGNED: YPS
DRAWN: YPS
CHECKED: RVT

RBF CONSULTING
carollo
IRVINE RANCH WATER DISTRICT

RHONDA V. TIEJERINA REE NO. 15473 ELECTRICAL ENGINEER DATE
CINDY MILLER RCE NO. 58116 PROJECT MANAGER DATE
PATRICIA UEMATSU RCE NO. 36762 PRINCIPAL ENGINEER DATE

IRVINE RANCH WATER DISTRICT
BAKER WATER TREATMENT PLANT
PROJECT NO. 11218

MAIN SWITCHBOARD SINGLE LINE DIAGRAM

DRAWING E018
SHEET 442 OF 632

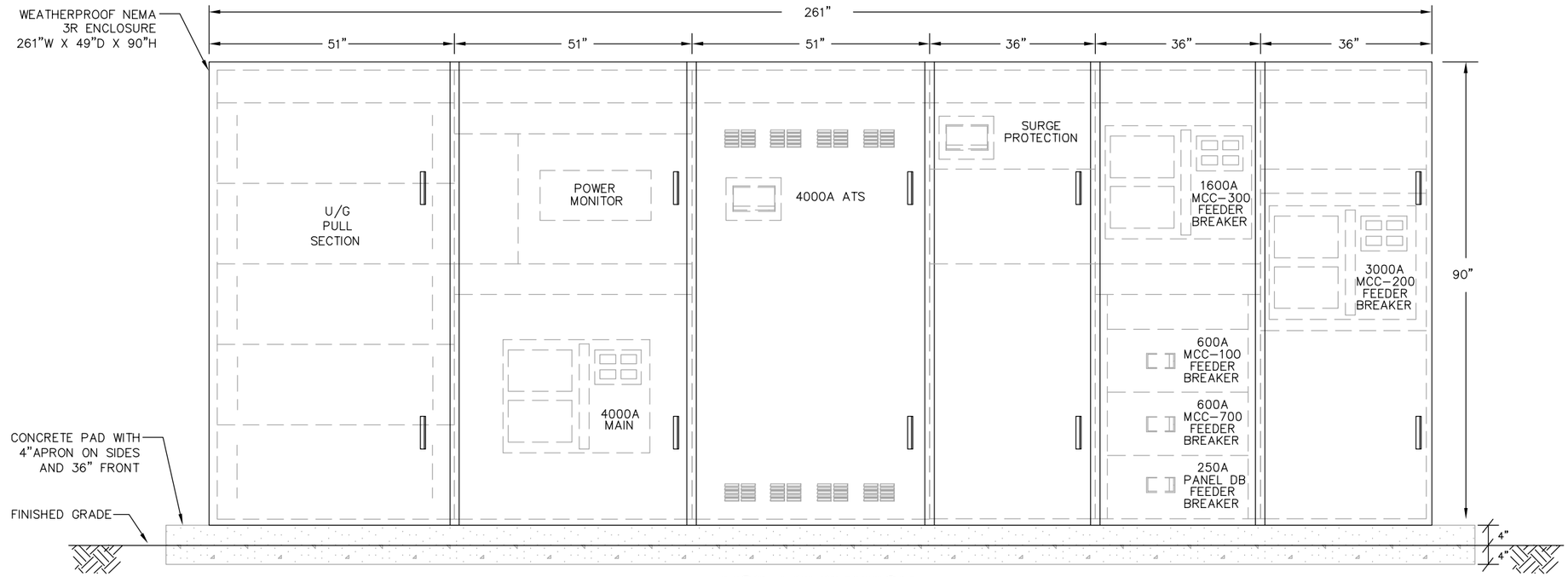

MSB-1 ELEVATION

NTS

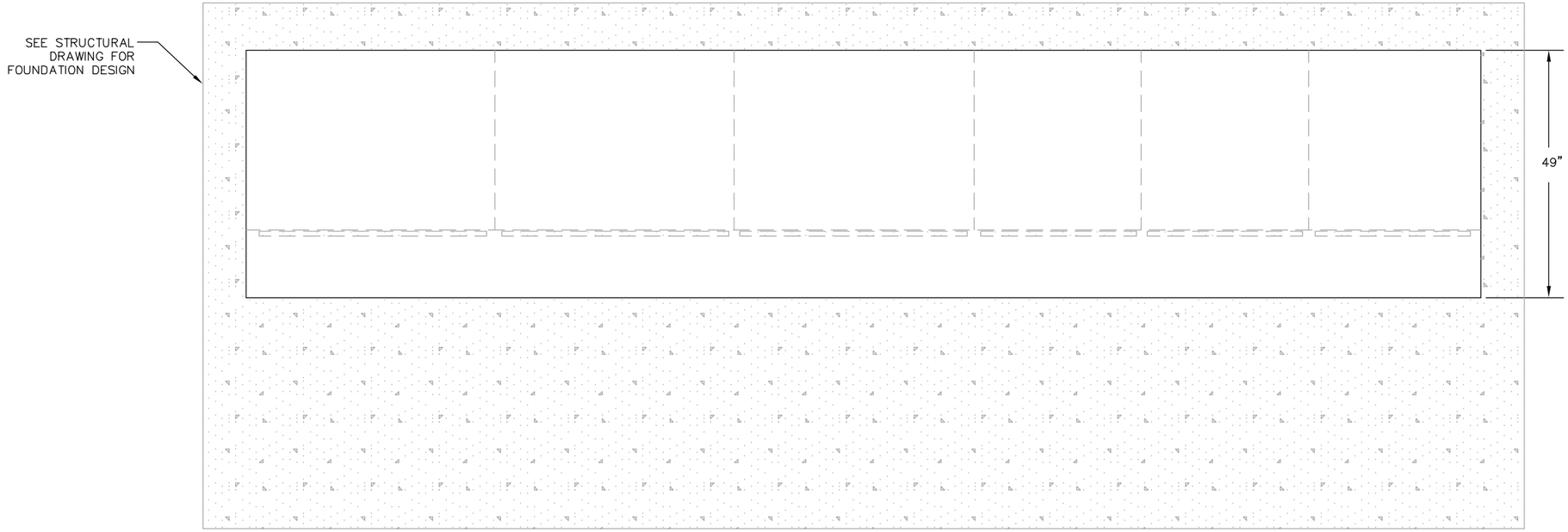

MSB-1 FLOOR PLAN

NTS

No.	DATE	REVISIONS	APPROVED

DESIGNED: YPS
DRAWN: YPS
CHECKED: RVT

RBF CONSULTING

carollo

IRVINE RANCH WATER DISTRICT

RHONDA V. TIEJERINA REE NO. 15473 ELECTRICAL ENGINEER DATE
CINDY MILLER RCE NO. 58116 PROJECT MANAGER DATE
PATRICIA UEMATSU RCE NO. 36762 PRINCIPAL ENGINEER DATE

IRVINE RANCH WATER DISTRICT
BAKER WATER TREATMENT PLANT
PROJECT NO. 11218

MAIN SWITCHBOARD ELEVATIONS

DRAWING **E019**
SHEET **443** OF **632**

LAST SAVED BY: ypsee LAST UPDATED: 01/17/2012 02:25 PM FILENAME: 6232-E019.dwg

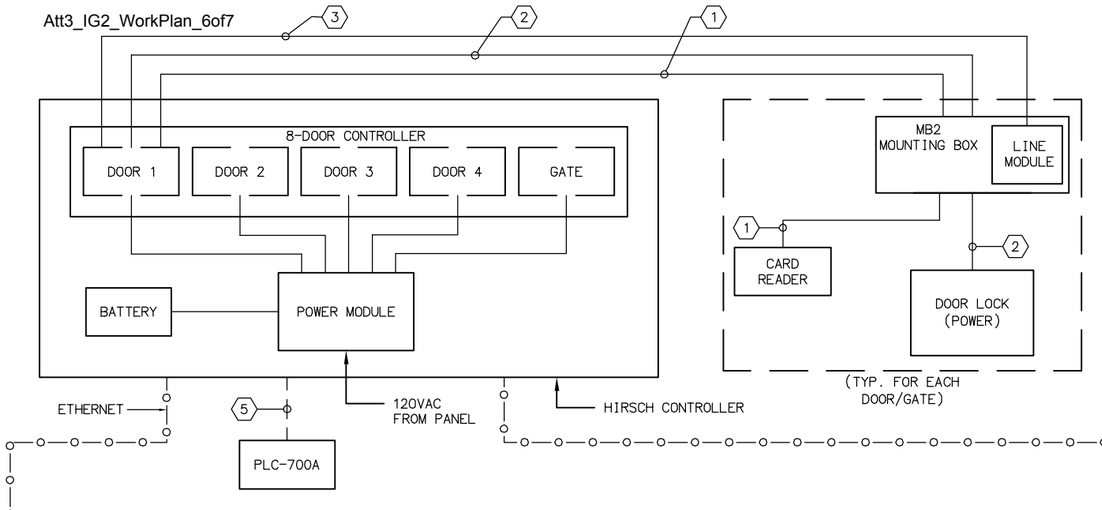

CHEMICAL BUILDING

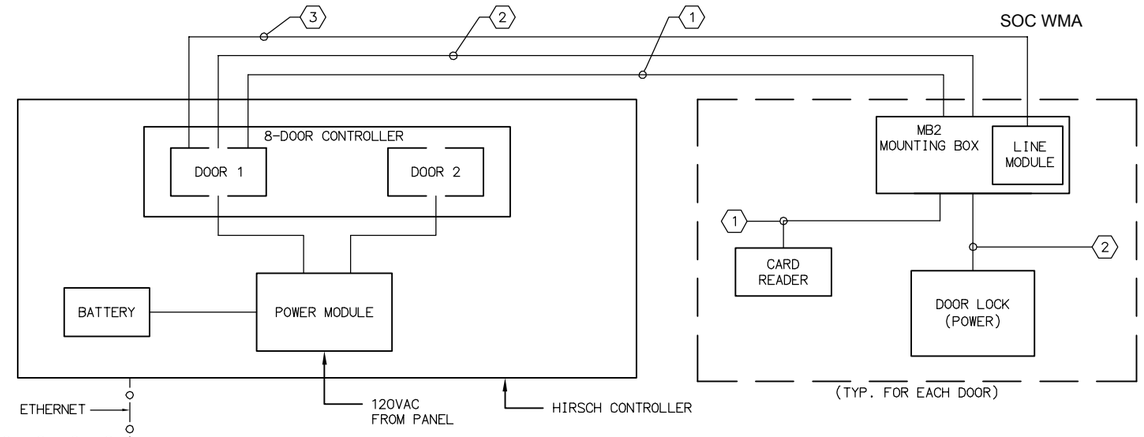

CONSTRUCTION MANAGEMENT BUILDING

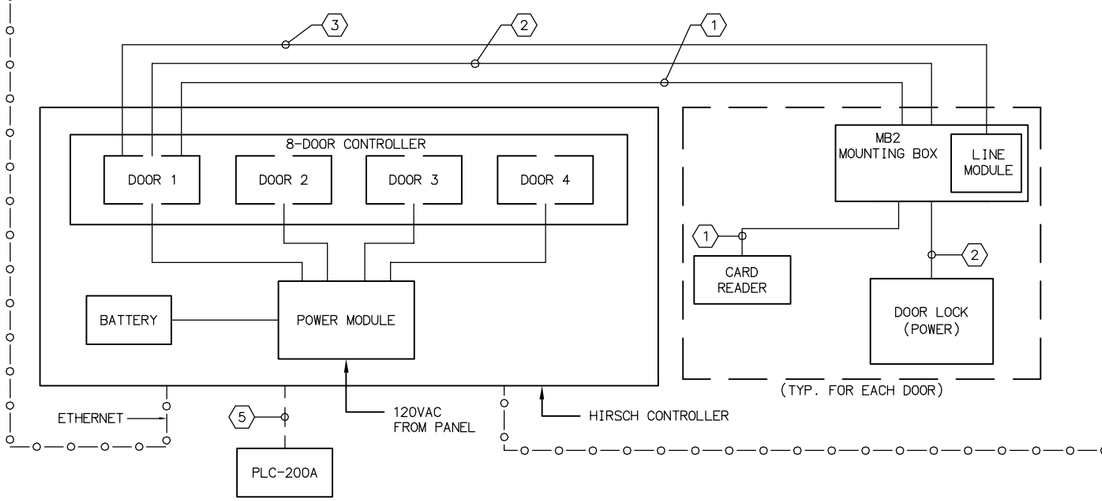

FEED WATER PUMP STATION

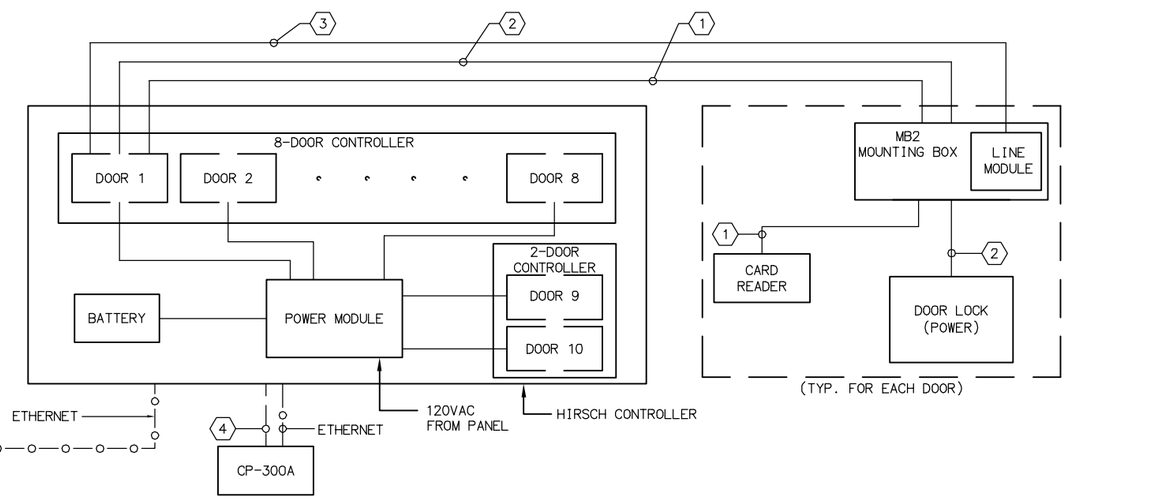

TREATMENT BUILDING (MASTER)

(1) (4/C#22) SHLD TO CARD READER - OR (4/C#18) SHLD

(2) 2#18 TO DOOR LOCK (POWER) - OR 2#16

(3) (4/C#22) SHLD TO LINE MODULE - OR (4/C#18)SHLD

(4) 4#14 - DOOR CONTROLLER ALARM (TREATMENT & CONSTRUCTION MANAGEMENT BUILDING)

(5) 2#14 - COMMON ALARM

NOTES:

1. ALL SYSTEM COMPONENTS SHALL BE PROVIDED BY THE ACCESS SYSTEM MANUFACTURER AND INSTALLED BY THE CONTRACTOR.
2. CONTRACTOR SHALL PROVIDE AND INSTALL ALL CONDUIT AND WIRING.
3. PROVIDE A NEW TELEPHONE CONNECTION TO THE HIRSCH CONTROLLER TO ALLOW FOR REMOTE REPROGRAMMING OF THE DOOR ACCESS SYSTEM BY THE SYSTEM MANUFACTURER.

No.	DATE	REVISIONS	APPROVED

DESIGNED: YPS
DRAWN: YPS
CHECKED: RVT

RBF CONSULTING

carollo

IRVINE RANCH WATER DISTRICT

RHONDA V. TIEJERINA REE NO. 15473 ELECTRICAL ENGINEER DATE
CINDY MILLER RCE NO. 58116 PROJECT MANAGER DATE
PATRICIA UEMATSU RCE NO. 36762 PRINCIPAL ENGINEER DATE

IRVINE RANCH WATER DISTRICT
BAKER WATER TREATMENT PLANT
PROJECT NO. 11218

DOOR ACCESS BLOCK DIAGRAM

DRAWING E020

SHEET 444 OF 632

FILENAME: 6232-E020.dwg
LAST UPDATED: 01/30/2012 09:38 AM
LAST SAVED BY: ypsee

NOTE: REFER TO HTTP://WWW.SCE.COM/ABOUTSCE/REGULATORY/DISTRIBUTIONMANUALS/UGS.HTM
SCE STANDARD REQUIREMENTS FOR SUBSURFACE/SEMI-BURIED STRUCTURES.

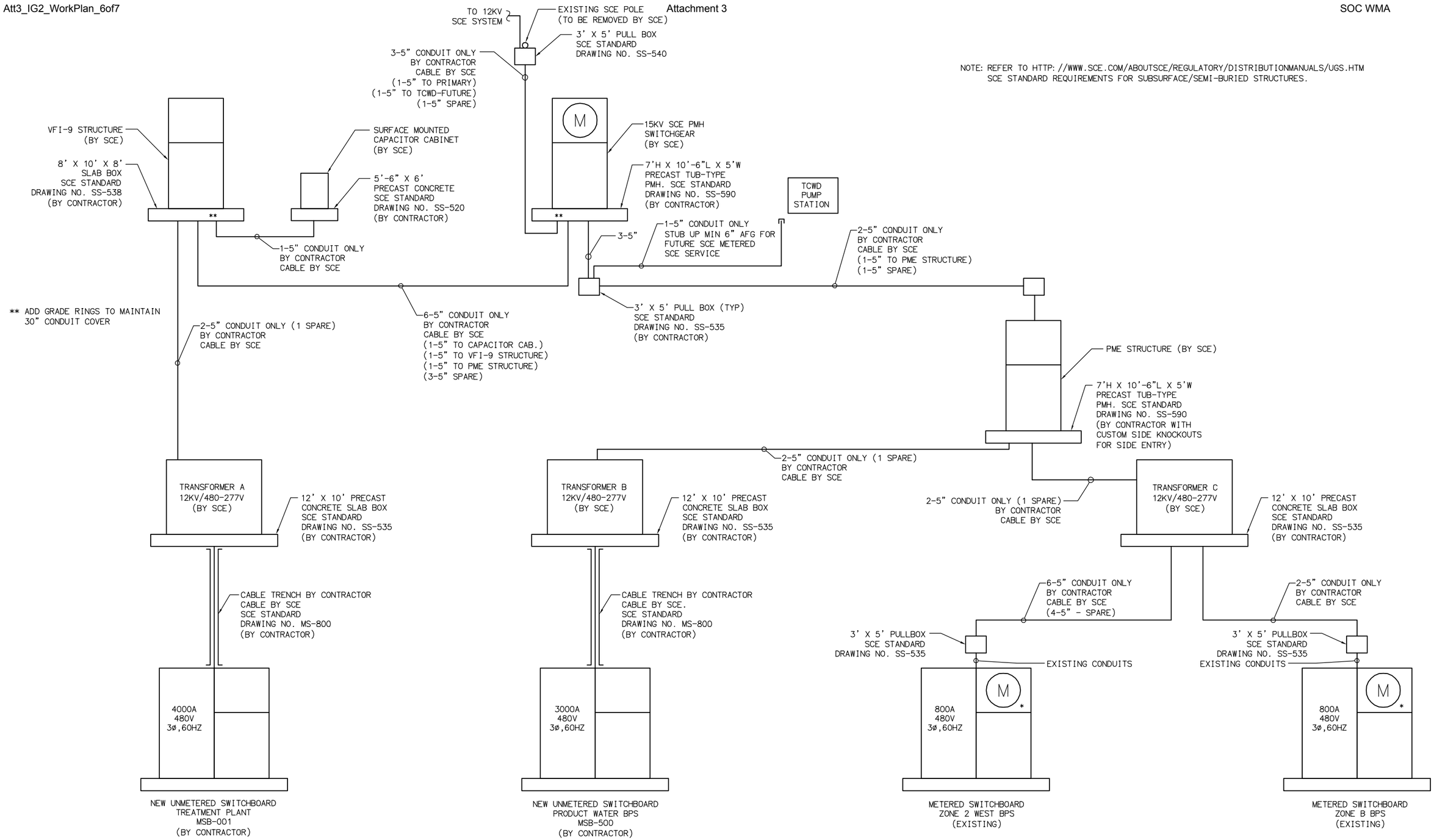

* SCE TO REMOVE EXISTING METER CONTRACTOR TO PROVIDE AND INSTALL NEW METER WITH ETHERNET CONNECTION TO EXISTING PUMP STATION PLC.

FILENAME: 6232-E021.dwg
LAST UPDATED: 01/13/2012 02:48 PM
LAST SAVED BY: ypsee

No.	DATE	REVISIONS	APPROVED

DESIGNED: YPS
DRAWN: YPS
CHECKED: RVT

RBF CONSULTING

carollo

IRVINE RANCH WATER DISTRICT

RHONDA V. TIEJERINA	REE NO. 15473	ELECTRICAL ENGINEER	DATE
CINDY MILLER	RCE NO. 58116	PROJECT MANAGER	DATE
PATRICIA UEMATSU	RCE NO. 36762	PRINCIPAL ENGINEER	DATE

IRVINE RANCH WATER DISTRICT
BAKER WATER TREATMENT PLANT
PROJECT NO. 11218

SCE INFRASTRUCTURE BLOCK DIAGRAM

DRAWING **E021**

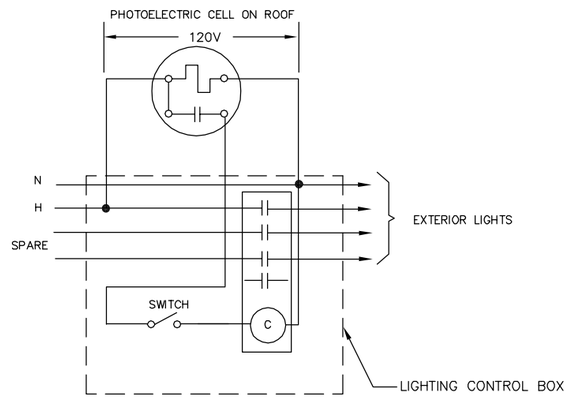

OUTDOOR LIGHTING CONTACTOR DIAGRAM*

TYP FOR ALL EXTERIOR LIGHTS IN THE FOLLOWING FACILITIES

1. FLOW CONTROL FACILITY
2. TCWD PUMP STATION

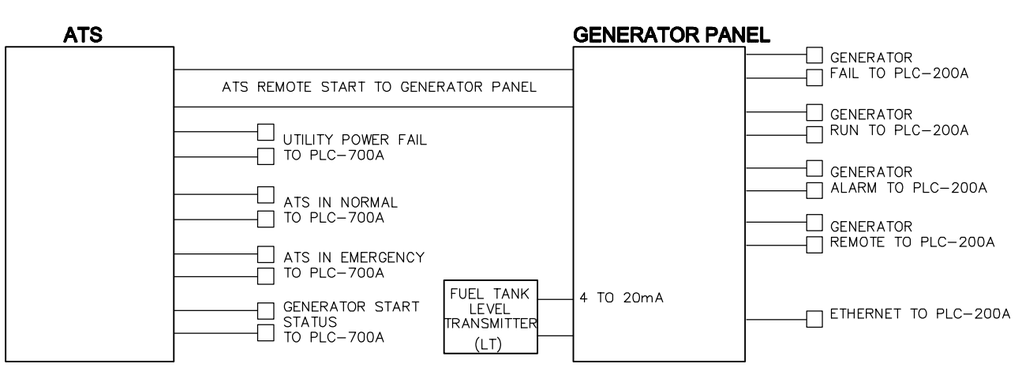

ATS & GENERATOR PANEL CONNECTION DIAGRAM

(FOR GEN-001)

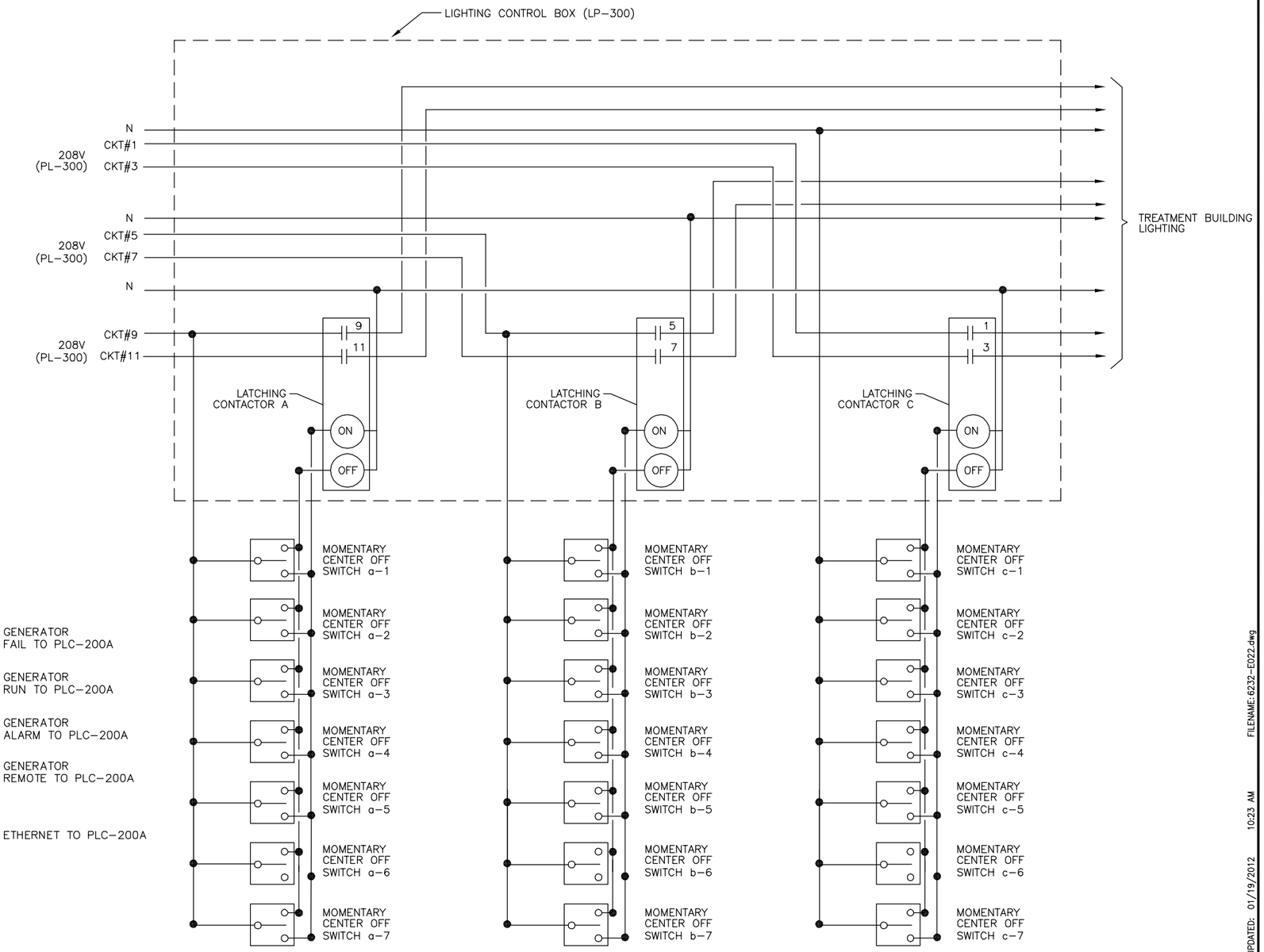

INDOOR LIGHTING CONTACTOR DIAGRAM*

(TREATMENT BUILDING)

* ALL LIGHT CONTROL COMPONENTS SHALL BE INSTALLED IN LIGHTING CONTROL BOX (LP-XXX). INCLUDING THE DOOR ACCESS CONTROL PANEL. SEE DWG E020

LAST SAVED BY: ypsee LAST UPDATED: 01/19/2012 10:23 AM FILENAME: 6232-E022.dwg

No.	DATE	REVISIONS	APPROVED

DESIGNED: YPS
DRAWN: YPS
CHECKED: RVT

RBF CONSULTING | carollo | IRVINE RANCH WATER DISTRICT

RHONDA V. TIEJERINA REE NO. 15473 ELECTRICAL ENGINEER DATE
CINDY MILLER RCE NO. 58116 PROJECT MANAGER DATE
PATRICIA UEMATSU RCE NO. 36762 PRINCIPAL ENGINEER DATE

IRVINE RANCH WATER DISTRICT
BAKER WATER TREATMENT PLANT
PROJECT NO. 11218

ATS , GENERATOR PANEL AND LIGHTING CONNECTION DIAGRAM

DRAWING E022

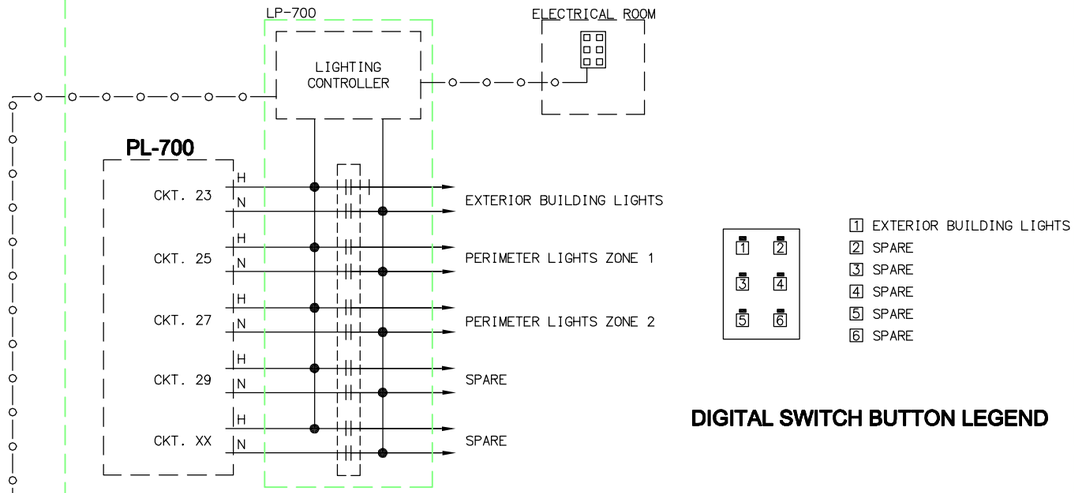

CHEMICAL BUILDING

1 EXTERIOR BUILDING LIGHTS
2 SPARE
3 SPARE
4 SPARE
5 SPARE
6 SPARE

DIGITAL SWITCH BUTTON LEGEND

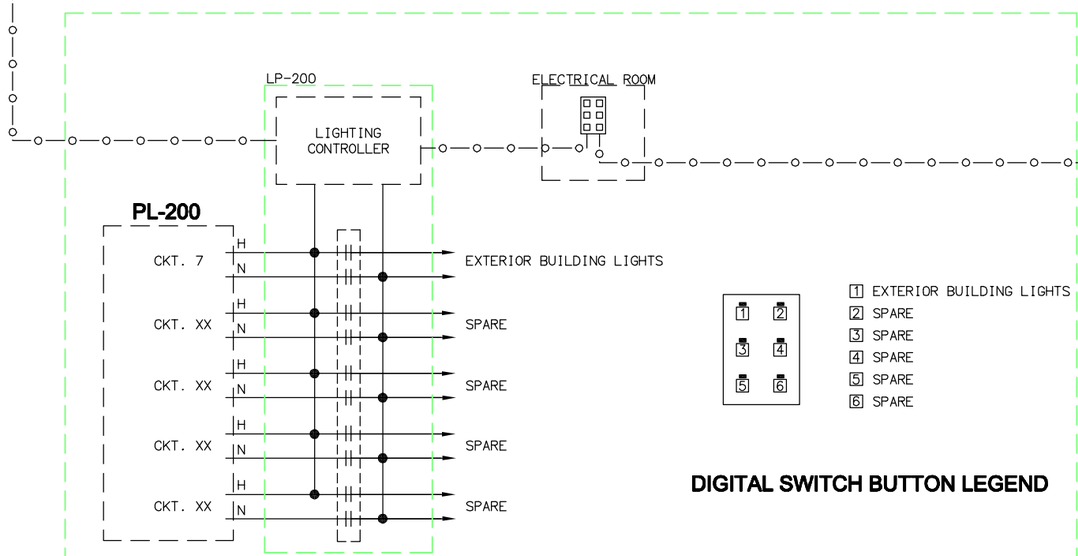

FEED WATER PUMP STATION BUILDING

1 EXTERIOR BUILDING LIGHTS
2 SPARE
3 SPARE
4 SPARE
5 SPARE
6 SPARE

DIGITAL SWITCH BUTTON LEGEND

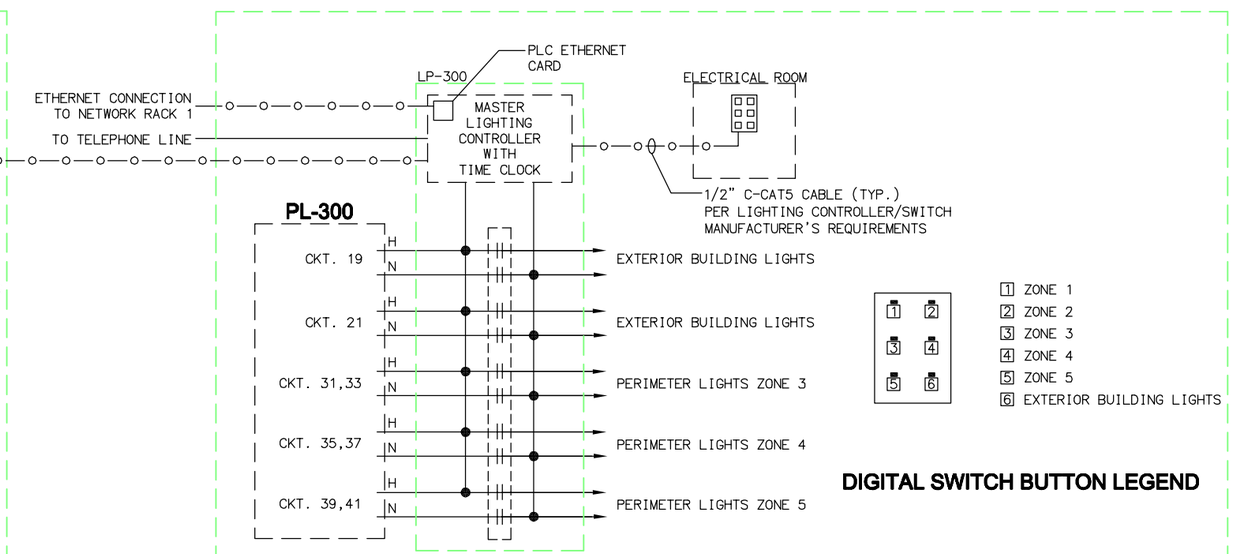

TREATMENT BUILDING

1 ZONE 1
2 ZONE 2
3 ZONE 3
4 ZONE 4
5 ZONE 5
6 EXTERIOR BUILDING LIGHTS

DIGITAL SWITCH BUTTON LEGEND

EXTERIOR LIGHTING CONTROL DIAGRAM

N.T.S.

No.	DATE	REVISIONS	APPROVED

DESIGNED: YPS
DRAWN: YPS
CHECKED: RVT

RBF CONSULTING

carollo

IRVINE RANCH WATER DISTRICT

RHONDA V. TIEJERINA REE NO. 15473 ELECTRICAL ENGINEER DATE
CINDY MILLER RCE NO. 58116 PROJECT MANAGER DATE
PATRICIA UEMATSU RCE NO. 36762 PRINCIPAL ENGINEER DATE

IRVINE RANCH WATER DISTRICT
BAKER WATER TREATMENT PLANT
PROJECT NO. 11218

LIGHTING CONTROL BLOCK DIAGRAM

DRAWING E023

SHEET 447 OF 632

LAST SAVED BY: ypsee LAST UPDATED: 01/30/2012 01:47 PM FILENAME: 6232-E023.dwg

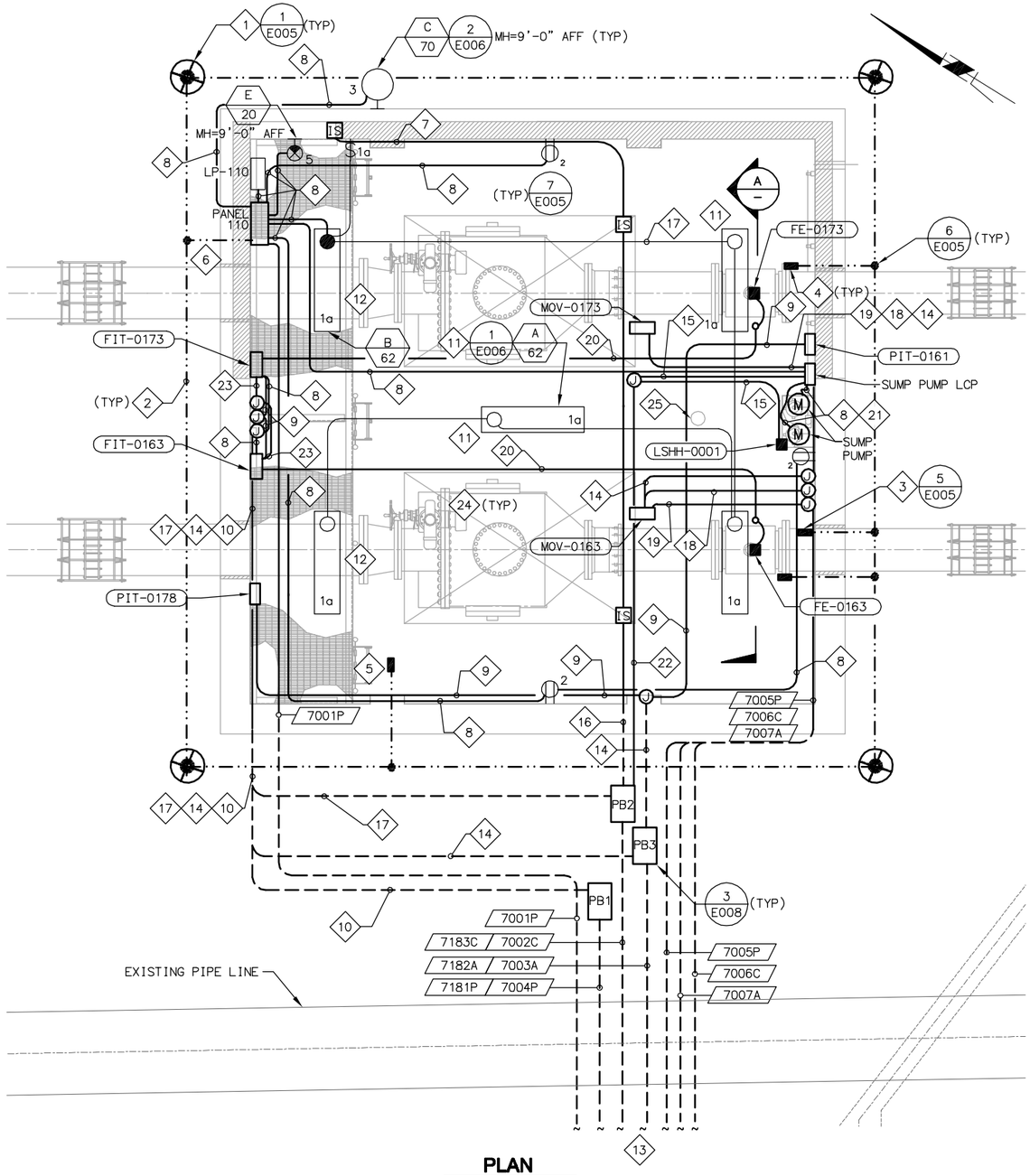

PLAN

SCALE: 1/4"=1'-0"

VOLTS	120/208V							PANEL	PL-110									MAIN BREAKER	SOC WMA 50A				
PHASE	3																	BUS RATING	100A				
WIRE	4							LOCATION	FLOW CONTROL FACILITY									MOUNTING:	WALL				

DESCRIPTION	LTS.	REC.	MISC.	VOLT-AMPS øA	VOLT-AMPS øB	VOLT-AMPS øC	BRKR. AMP	BRKR. P	CIR.	BUS A B C	CIR	BRKR. P	BRKR. AMP	VOLT-AMPS øA	VOLT-AMPS øB	VOLT-AMPS øC	LTS.	REC.	MISC.	DESCRIPTION
INTERIOR LIGHTING	X			310			20	1	1		2	1	20	540				X		RECEPTACLE
EXTERIOR LIGHTING (LP-110)	X				70		20	1	3		4	1	20		1000			X		SP-110
EXIT LIGHT	X					20	20	1	5		6	1	20							SPARE
METER VAULT LIGHTING	X			62			20	1	7		8	1	20							SPARE
SPARE							20	1	9		10	1	20							SPARE
SPARE							20	1	11		12	1	20							SPARE
SPARE							20	1	13		14	1	20							SPACE
SPARE							20	1	15		16	1	20							SPACE
SPARE							20	1	17		18	1	20							SPARE
SUBTOTAL				372	70	20								540	1000	0				

LOAD øA 912 øB 1070 øC 20

LCL X .25 øA – øB – øC –

TOTAL øA 912 øB 1070 øC 20

PANEL TOTAL 2002 VOLT-AMPS. = 5.56 AMPS

HIGH LEG 1070 VOLT-AMPS. = 8.92 AMPS

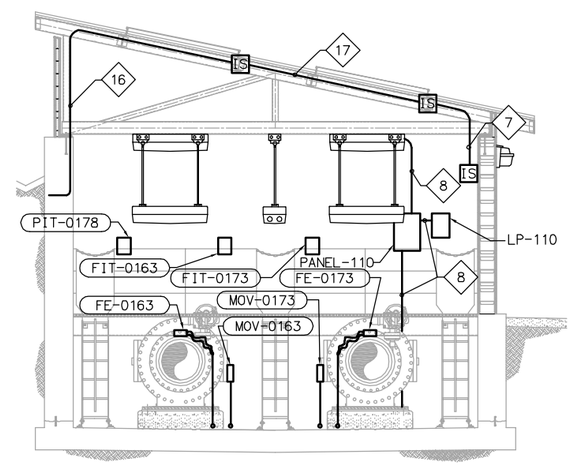

SECTION A

NTS

NOTES:

1. PROVIDE A CAST IRON LID FOR GROUND ROD WELLS.
2. #4/0 BARE COPPER GROUNDING CONDUCTOR.
3. ROUTE #4/0 GROUND WIRE AND CONNECT TO PIPING SYSTEM.
4. ROUTE #2 GROUNDING WIRE AND CONNECT TO EACH FLOWMETER GROUND RING PER MANUFACTURER'S INSTRUCTIONS.
5. ROUTE #4/0 GROUNDING WIRE AND CONNECT TO STRUCTURAL REBAR.
6. ROUTE #2 GROUNDING WIRE AND CONNECT TO PANEL-110
7. 1"C - 2#14 (INTRUSION SWITCH)
8. 1"C - 2#10, 1#10G
9. 1"C - (2/C#16) SHLD (FIT, PIT)
10. 1"C - 4#10, 1#10G (FIT)
11. INSTALL LIGHTS AT 10'-0" AFF.
12. INSTALL LIGHTS DIRECTLY TO THE CEILING AS SHOWN.
13. TO PANEL-700 & CP-700 IN CHEMICAL BUILDING. SEE DWG E011 FOR CONTINUATION.
14. 1"C - 2(2/C#16) SHLD
15. 1"C - 2#14 (SUMP PUMP ALARM, LSH)
16. 1"C - 6#14 (INTRUSION SWITCH)
17. 1"C - 4#14 (INTRUSION SWITCH)
18. 1"C - 3#10. 1#10G
19. 1"C - 8#14, 2#14 SPARE
20. 1"C - MSC
21. 1"C - 8#14 (SUMP PUMP LEVEL)
22. 1"C - 4#14 (SUMP PUMP ALARM & LSH)
23. 1"C - 2#14 (FIT)
24. ALL CONDUIT SHOWN IN THE FLOW CONTROL FACILITY ARE DIAGRAMMATIC ONLY. CONDUIT SHALL BE INSTALLED BASED ON FIELD CONDITIONS. FIELD RELOCATE IF REQUIRED. CONTRACTOR TO SUBMIT CONDUIT LAYOUT FOR ENGINEER APPROVAL PRIOR TO INSTALLATION.
25. SOLAR TUBE. SEE ARCHITECTURE DRAWINGS FOR DETAILS

EQUIPMENT TAG NUMBERS ON THIS DRAWING ARE PRECEDED W/ **01-RW-** UNLESS OTHERWISE LABELED

No.	DATE	REVISIONS	APPROVED

DESIGNED: YPS
DRAWN: YPS
CHECKED: RVT

RBF CONSULTING

carollo

IRVINE RANCH WATER DISTRICT

RHONDA V. TIEJERINA REE NO. 15473 ELECTRICAL ENGINEER DATE
CINDY MILLER RCE NO. 58116 PROJECT MANAGER DATE
PATRICIA UEMATSU RCE NO. 36762 PRINCIPAL ENGINEER DATE

IRVINE RANCH WATER DISTRICT
BAKER WATER TREATMENT PLANT
PROJECT NO. 11218

FLOW CONTROL FACILITY ELECTRICAL PLAN AND SECTION

DRAWING **E101**

FILENAME: 6232-E101.dwg LAST UPDATED: 01/25/2012 03:21 PM LAST SAVED BY: ypsee

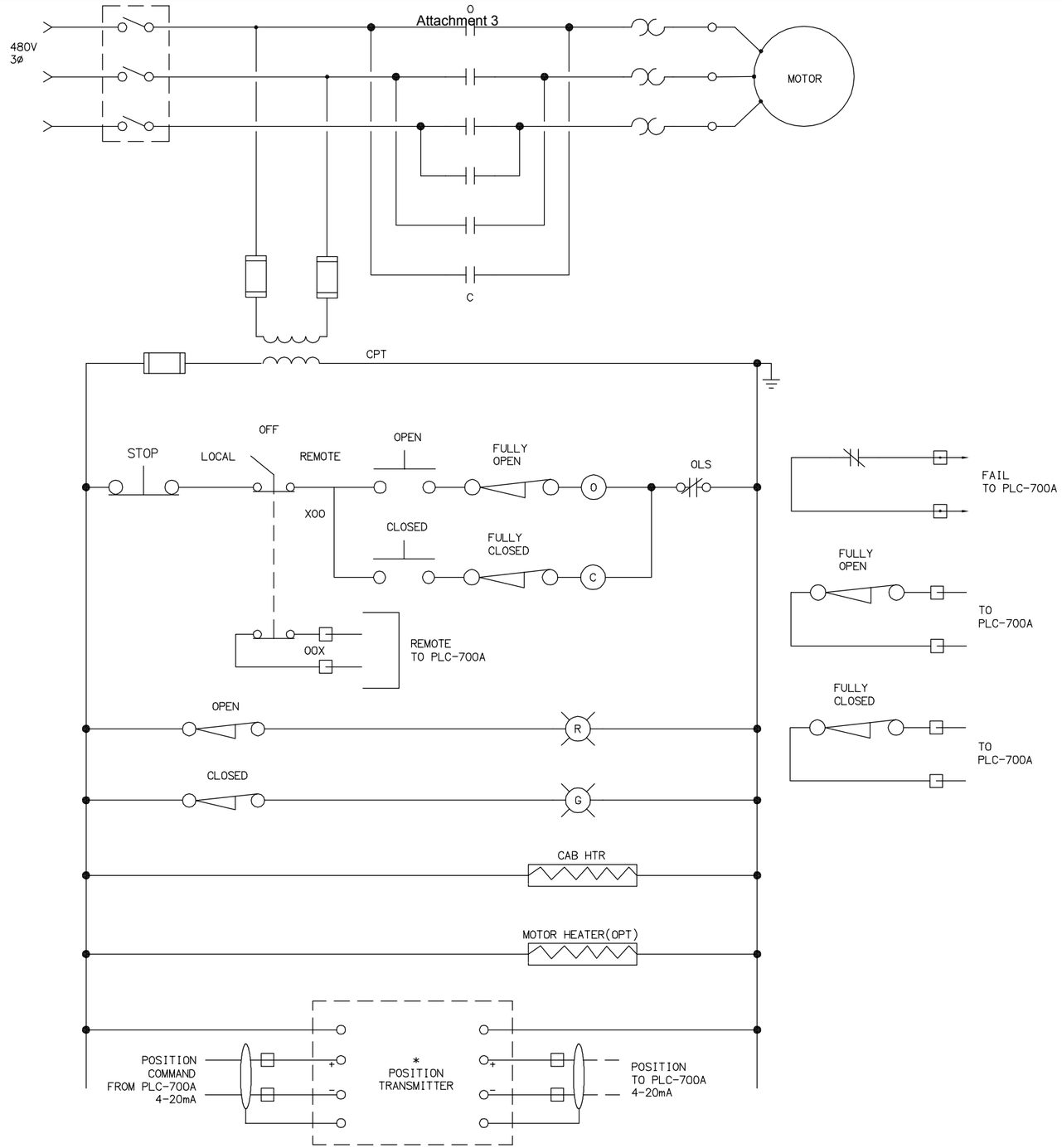

MODULATING MOTOR OPERATOR VALVE SCHEMATIC

NTS (MOV-0163 & MOV-0173. REMOTE CONTROL STATION REQUIRED)

2 / –

EQUIPMENT TAG NUMBERS ON THIS DRAWING ARE PRECEDED W/ **01-RW-** UNLESS OTHERWISE LABELED

No.	DATE	REVISIONS	APPROVED

DESIGNED: YPS
DRAWN: YPS
CHECKED: RVT

RBF CONSULTING

carollo

IRVINE RANCH WATER DISTRICT

RHONDA V. TIEJERINA REE NO. 15473 ELECTRICAL ENGINEER DATE
CINDY MILLER RCE NO. 58116 PROJECT MANAGER DATE
PATRICIA UEMATSU RCE NO. 36762 PRINCIPAL ENGINEER DATE

IRVINE RANCH WATER DISTRICT
BAKER WATER TREATMENT PLANT
PROJECT NO. 11218

FLOW CONTROL FACILITY SCHEMATIC CONTROL DIAGRAM

DRAWING **E102**

SHEET **449** OF **632**

LAST SAVED BY: ypsee LAST UPDATED: 01/19/2012 01:37 PM FILENAME: 6232-E102.dwg

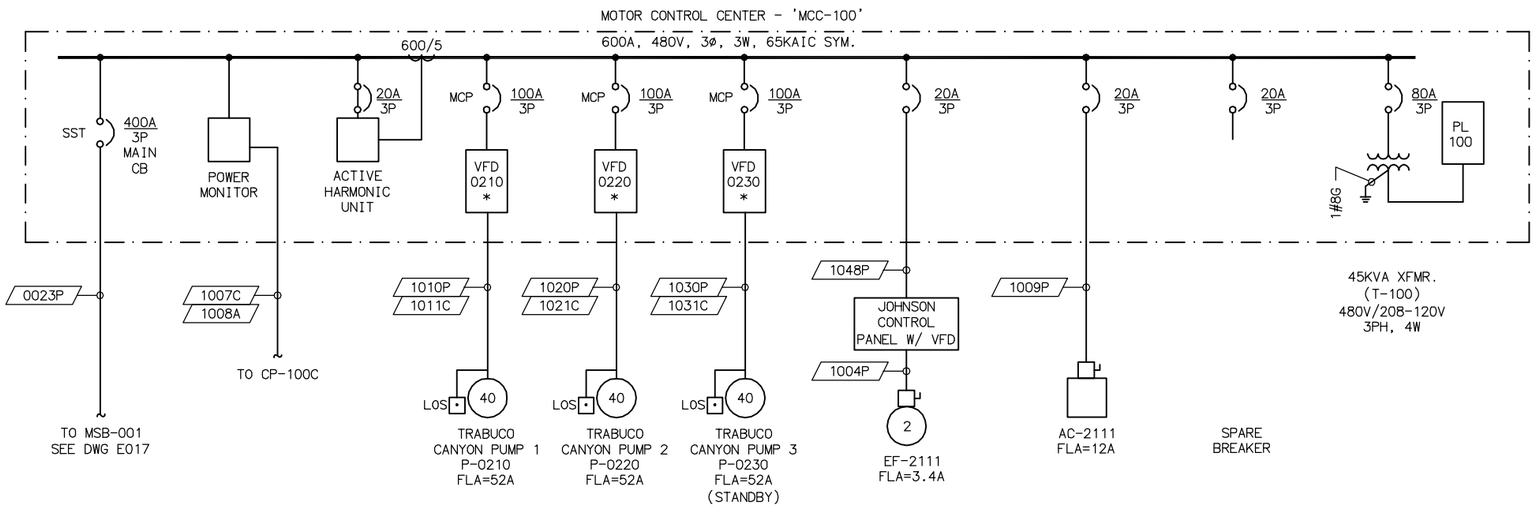

SINGLE LINE DIAGRAM
N.T.S.

MCC-100

LOAD SCHEDULE

EQUIPMENT	HP	F.L. AMPS CONNECTED	F.L. AMPS RUNNING	F.L. AMPS GENERATOR
TRABUCO CANYON PUMP 1	40	52	52	52
TRABUCO CANYON PUMP 2	40	52	52	52
TRABUCO CANYON PUMP 3(STANDBY)	40	52	-	-
EF-2111	2	3.4	3.4	-
AC-2111	-	12	12	12
45KVA XFMR	-	54	54	54
25% LARGEST LOAD		13	13	-
TOTAL LOADS		225.4	186.4	170

EQUIPMENT TAG NUMBERS ON THIS DRAWING ARE PRECEDED W/ **01-RW-** UNLESS OTHERWISE LABELED

No.	DATE	REVISIONS	APPROVED

DESIGNED: YPS
DRAWN: YPS
CHECKED: RVT

RBF CONSULTING
carollo
IRVINE RANCH WATER DISTRICT

RHONDA V. TIEJERINA REE NO. 15473 ELECTRICAL ENGINEER DATE
CINDY MILLER RCE NO. 58116 PROJECT MANAGER DATE
PATRICIA UEMATSU RCE NO. 36762 PRINCIPAL ENGINEER DATE

IRVINE RANCH WATER DISTRICT
BAKER WATER TREATMENT PLANT
PROJECT NO. 11218

TRABUCO CANYON WATER DISTRICT
PUMP STATION
SINGLE LINE DIAGRAM

DRAWING **E103**
SHEET **450** OF **632**

LAST SAVED BY: ypsee LAST UPDATED: 01/19/2012 10:31 AM FILENAME: 6232-E103.dwg

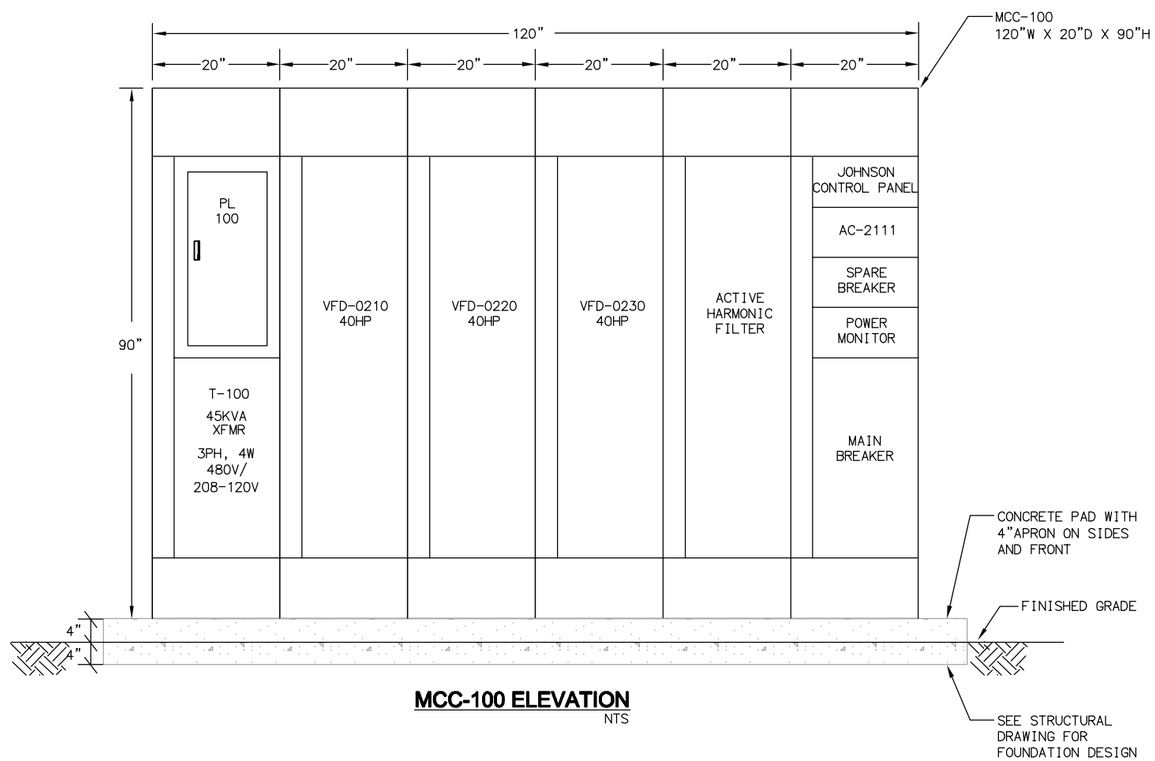

MCC-100 ELEVATION
NTS

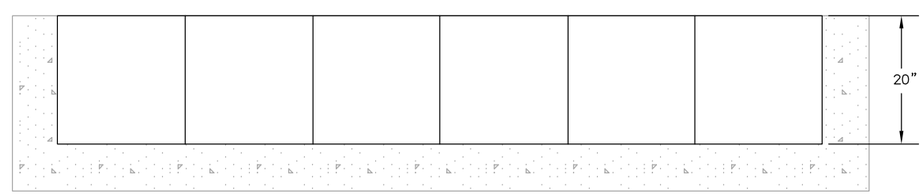

MCC-100 FLOOR PLAN
NTS

EQUIPMENT TAG NUMBERS ON THIS DRAWING ARE PRECEDED W/ **01-RW-** UNLESS OTHERWISE LABELED

No.	DATE	REVISIONS	APPROVED

DESIGNED: YPS
DRAWN: YPS
CHECKED: RVT

RBF CONSULTING

carollo

IRVINE RANCH WATER DISTRICT

RHONDA V. TIEJERINA REE NO. 15473 ELECTRICAL ENGINEER DATE
CINDY MILLER RCE NO. 58116 PROJECT MANAGER DATE
PATRICIA UEMATSU RCE NO. 36762 PRINCIPAL ENGINEER DATE

IRVINE RANCH WATER DISTRICT
BAKER WATER TREATMENT PLANT
PROJECT NO. 11218

TRABUCO CANYON WATER DISTRICT
PUMP STATION
EQUIPMENT ELEVATIONS

DRAWING **E104**
SHEET **451** OF **632**

FILENAME: 6232-E104.dwg
LAST UPDATED: 01/13/2012 02:52 PM
LAST SAVED BY: ypsee

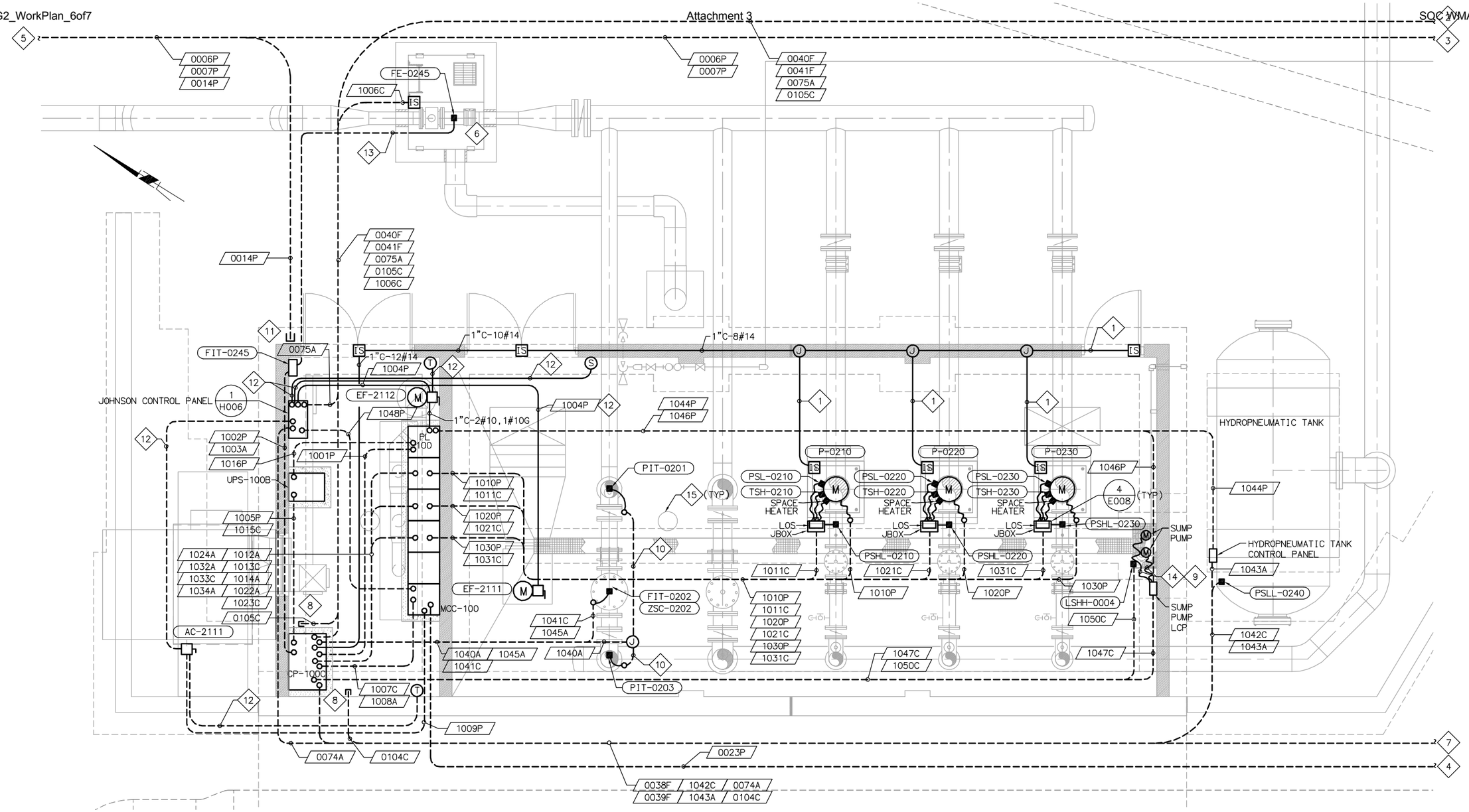

POWER PLAN

SCALE: 3/8" = 1'-0"

NOTES:

1. 1"C - 2#14
2. FIBER OPTIC COMMUNICATION CONDUIT TO PRODUCT WATER PUMP STATION. SEE DWG E011 FOR CONTINUATION.
3. POWER CONDUIT TO SCE PME STRUCTURE 2. SEE DWG E011 FOR CONTINUATION.
4. POWER CONDUIT FROM MSB-001. SEE DWG E011 FOR CONTINUATION.
5. POWER CONDUIT FROM SCE PRIMARY METERING STRUCTURE. SEE DWG E011 FOR CONTINUATION.
6. NEW METER VAULT. SEE DWG M110 FOR DETAILS.
7. TO COMMUNICATION PULLBOX 2. SEE DWG E011 FOR CONTINUATION.
8. STUB UP CONDUIT MIN 6" AFF AND CAP OFF END.
9. 1"C - 4#14
10. 1"C-(2/C#16) SHLD
11. 1-5" CONDUIT TO SCE PME STRUCTURE 2 FOR FUTURE USE. STUB UP 6" MIN AFF AND CAP OFF ENDS.
12. 1" CONDUIT ONLY. REFER TO HVAC DRAWINGS FOR NUMBER OF WIRES REQUIRED.
13. 1"C - MANUFACTURER SUPPLIED CABLE
14. 1"C - 2#10, 1#10G
15. SOLAR TUBE. SEE ARCHITECTURE DRAWINGS FOR DETAILS

EQUIPMENT TAG NUMBERS ON THIS DRAWING ARE PRECEDED W/ **01-RW-** UNLESS OTHERWISE LABELED

No.	DATE	REVISIONS	APPROVED

DESIGNED: YPS
DRAWN: YPS
CHECKED: RVT

RBF CONSULTING
carollo
IRVINE RANCH WATER DISTRICT

RHONDA V. TIEJERINA REE NO. 15473 ELECTRICAL ENGINEER DATE
CINDY MILLER RCE NO. 58116 PROJECT MANAGER DATE
PATRICIA UEMATSU RCE NO. 36762 PRINCIPAL ENGINEER DATE

IRVINE RANCH WATER DISTRICT
BAKER WATER TREATMENT PLANT
PROJECT NO. 11218

TRABUCO CANYON WATER DISTRICT PUMP STATION POWER PLAN

DRAWING **E105**
SHEET **452** OF **632**

LAST SAVED BY: ypsee LAST UPDATED: 01/25/2012 03:25 PM FILENAME: 6232-E105.dwg

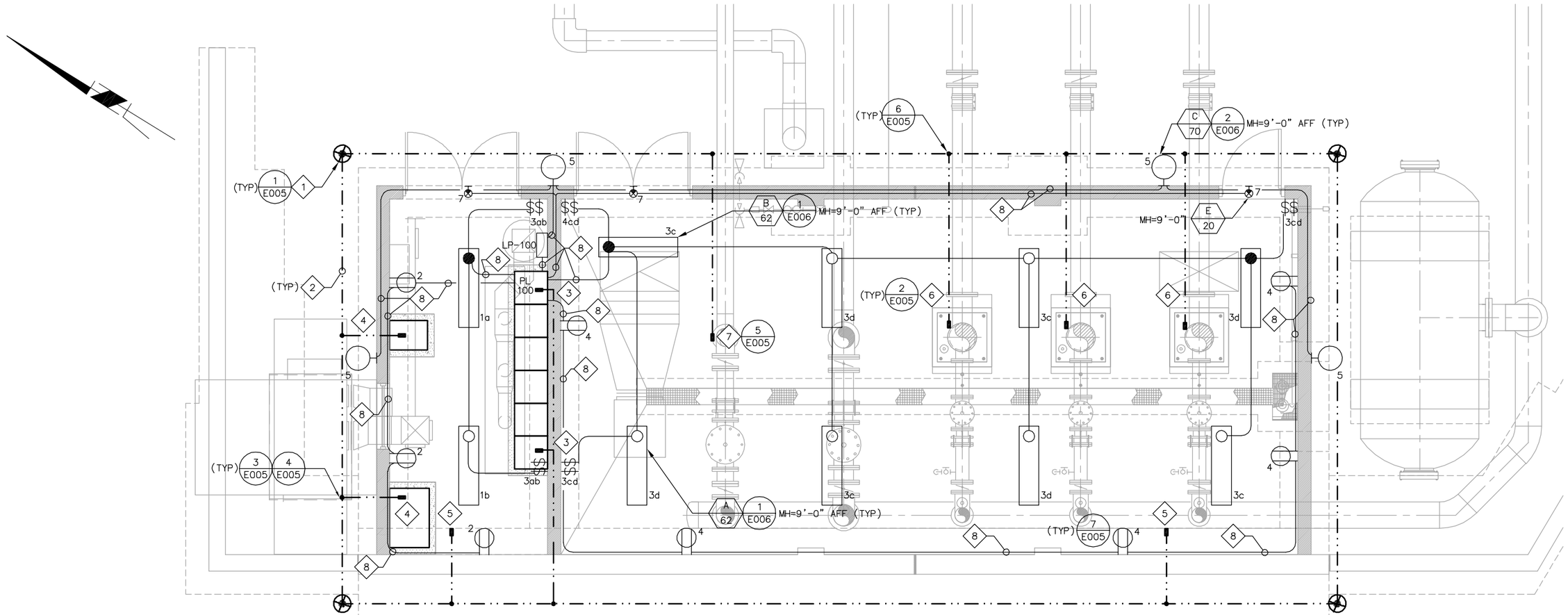

LIGHTING & GROUNDING PLAN

SCALE: 3/8" = 1'-0"

NOTES:

1. PROVIDE A CAST IRON LID FOR GROUND ROD WELLS.
2. #4/0 BARE COPPER GROUNDING CONDUCTOR.
3. ROUTE #4/0 GROUNDING WIRE THROUGH SLAB AND CONNECT TO MCC-100
4. ROUTE #4/0 GROUNDING WIRE TO CONTROL CABINET AND UPS ENCLOSURE.
5. ROUTE #4/0 GROUNDING WIRE AND CONNECT TO STRUCTURAL REBAR.
6. ROUTE #4/0 GROUNDING WIRE THROUGH SLAB AND CONNECT TO MOTOR FRAMES.
7. ROUTE #4/0 GROUND WIRE THROUGH SLAB AND CONNECT TO PIPING SYSTEM.
8. 1"C - 2#10, 1#10G
9. ALL LIGHTS & RECEPTACLES SHALL BE POWERED FROM PL-100. CONDUIT ROUTING SHOWN ARE DIAGRAMMATIC AND FOR REFERENCE ONLY. CONTRACTOR TO PROVIDE AND INSTALL A WORKABLE LIGHTING & RECEPTACLE SYSTEM AS SHOWN. ALL LIGHTING & RECEPTACLES JUNCTION BOX SHALL BE INSTALLED BASED ON FIELD CONDITIONS. FIELD RELOCATED IF REQUIRED.

EQUIPMENT TAG NUMBERS ON THIS DRAWING ARE PRECEDED W/ **01-RW-** UNLESS OTHERWISE LABELED

No.	DATE	REVISIONS	APPROVED

DESIGNED: YPS
DRAWN: YPS
CHECKED: RVT

RBF CONSULTING

carollo

IRVINE RANCH WATER DISTRICT

RHONDA V. TIEJERINA REE NO. 15473 ELECTRICAL ENGINEER DATE
CINDY MILLER RCE NO. 58116 PROJECT MANAGER DATE
PATRICIA UEMATSU RCE NO. 36762 PRINCIPAL ENGINEER DATE

IRVINE RANCH WATER DISTRICT
BAKER WATER TREATMENT PLANT
PROJECT NO. 11218

TRABUCO CANYON WATER DISTRICT
PUMP STATION
LIGHTING & GROUNDING PLAN

DRAWING **E106**
SHEET **453** OF **632**

FILENAME: 6232-E106.dwg
LAST UPDATED: 01/18/2012 10:39 AM
LAST SAVED BY: ypsee

CONDUIT SCHEDULE

PLAN SYMBOL #	CONDUIT QTY	CONDUIT SIZE	CONDUCTOR QTY.& SIZE	INSULATION RATING	LOCATION FROM	LOCATION TO	DWG. NOS	REMARKS
1001P	1	1"	2#10, 1#10G	600V	PL-100	CP-100C	E105	
1002P	1	1"	2#10, 1#10G		CP-100C	FIT-0245	E105	
1003A	1	1"	(2/C#16) SHLD		CP-100C	FIT-0245	E105	
1004P	1	1"	3#10, 1#10G		JOHNSON CONTROL PANEL	EF-2111	E103,E105	
1005P	1	1"	2#10, 1#10G		UPS-100B	CP-100C	E105	
1006C	1	1"	2#14		CP-100C	VAULT INTRUSION SWITCH	E105	VIA JBOX
1007C	1	1"	2#14, 2#14 SPARE		MCC-100 (POWER MONITOR)	CP-100C	E103,E105	ALARM
1008A	1	2"	DATA LINK		MCC-100 (POWER MONITOR)	CP-100C	E103,E105	ETHERNET
1009P	1	1"	3#10, 1#10G		MCC-100	AC-2111	E103,E105	
1010P	1	1 1/2"	3#4, 1#8G		VFD-0210	P-0210	E103,E105	
1011C	1	1"	10#14		VFD-0210	LOS,PSHL,PSL,TSH,SPACE HTR	E103,E105	
1012A	1	2"	DATA LINK		VFD-0210	CP-100C	E105	
1013C	1	1"	14#14, 4#14 SPARE		VFD-0210	CP-100C	E105	
1014A	1	1"	2(2/C#16) SHLD		VFD-0210	CP-100C	E105	
1015C	1	1"	4#14, 4#14 SPARE		UPS-100B	CP-100C	E105	
1016P	1	1"	2#10, 1#10G		PL-100	UPS-100B	E105	
1020P	1	1 1/2"	3#4, 1#8G		VFD-0220	P-0220	E103,E105	
1021C	1	1"	10#14		VFD-0220	LOS,PSHL,PSL,TSH,SPACE HTR	E103,E105	
1022A	1	2"	DATA LINK		VFD-0220	CP-100C	E105	
1023C	1	1"	14#14, 4#14 SPARE		VFD-0220	CP-100C	E105	
1024A	1	1"	2(2/C#16) SHLD		VFD-0220	CP-100C	E105	
1030P	1	1 1/2"	3#4, 1#8G		VFD-0230	P-0230	E103,E105	
1031C	1	1"	10#14		VFD-0230	LOS,PSHL,PSL,TSH,SPACE HTR	E103,E105	
1032A	1	2"	DATA LINK		VFD-0230	CP-100C	E105	
1033C	1	1"	14#14, 4#14 SPARE		VFD-0230	CP-100C	E105	
1034A	1	1"	2(2/C#16) SHLD		VFD-0230	CP-100C	E105	
1040A	1	1"	2(2/C#16) SHLD		CP-100C	JBOX	E105	PIT-0201, PIT-0203
1041C	1	1"	2#14		CP-100C	ZSC-0202	E105	
1042C	1	1"	2#14		CP-100C	PSLL-0240 (AT SURGE TANK)	E105	
1043A	1	2"	3(2/C#16) SHLD		CP-100C	SURGE TANK CONTROL PANEL	E105	
1044P	1	1"	2#10, 1#10G		PL-100	SURGE TANK CONTROL PANEL	E105	
1045A	1	1"	(2/C#16) SHLD		CP-100C	FIT-0202	E105	
1046P	1	1"	2#10, 1#10G		PL-100	SUMP PUMP LCP	E105	
1047C	1	1"	10#14, 4#14 SPARE		CP-100C	SUMP PUMP LCP	E105	
1048P	1	1"	3#10, 1#10G		MCC-100	JOHNSON CONTROL PANEL	E103,E105	
1050C	1	1"	2#14		CP-100C	LSHH-0004	E105	

CONDUIT NUMBERING SCHEME	CONDUIT ABBREVIATIONS
AREA NUMBER — 1 001 P — CONDUIT ABBREVIATION; CONDUIT NUMBER	P = POWER C = CONTROL A = SIGNAL F = FIBER OPTIC

EQUIPMENT TAG NUMBERS ON THIS DRAWING ARE PRECEDED W/ **01-RW-** UNLESS OTHERWISE LABELED

VOLTS 120/208V
PHASE 3
WIRE 4

PANEL PL-100
LOCATION IN MCC-100

MAIN BREAKER SOC WMA 100A
BUS RATING 100A
MOUNTING: IN MCC

DESCRIPTION	LTS.	REC.	MISC.	VOLT-AMPS øA	VOLT-AMPS øB	VOLT-AMPS øC	BRKR. AMP	BRKR. P	CIR.	BUS A B C	CIR	BRKR. P	BRKR. AMP	VOLT-AMPS øA	VOLT-AMPS øB	VOLT-AMPS øC	LTS.	REC.	MISC.	DESCRIPTION
ELEC ROOM LIGHTING	X			124			20	1	1		2	1	20	540				X		ELEC ROOM RECEPTACLE
PUMP ROOM LIGHTING	X				496		20	1	3		4	1	20		900			X		PUMP ROOM RECEPTACLE
EXTERIOR LIGHTING (LP-100)	X					350	20	1	5		6	1	20			1000			X	UPS-100B
EXIT LIGHT	X			20			20	1	7		8	1	20	100					X	SURGE TANK CONTROL PANEL
SPARE							20	1	9		10	1	20		500				X	CP-100C
SPARE							20	1	11		12	1	20			1000			X	SUMP PUMP LCP
SPARE							20	1	13		14	1	20	600					X	EF-2112
SPARE							20	1	15		16	1	20							SPACE
SPARE							20	1	17		18	1	20							SPARE
SPARE							20	1	19		20	1	20							SPARE
SPARE							20	1	21		22	1	20							SPACE
SPARE							20	1	23		24	1	20							SPACE
SUBTOTAL				144	496	350								1240	1400	2000				

LOAD øA 1384 øB 1396 øC 2350
LCL X .25 øA - øB - øC -
TOTAL øA 1384 øB 1896 øC 2350

PANEL TOTAL 5630 VOLT-AMPS. = 14.24 AMPS
HIGH LEG 2350 VOLT-AMPS. = 19.58 AMPS

No.	DATE	REVISIONS	APPROVED

DESIGNED: YPS
DRAWN: YPS
CHECKED: RVT

RBF CONSULTING
carollo
IRVINE RANCH WATER DISTRICT

RHONDA V. TIEJERINA REE NO. 15473 ELECTRICAL ENGINEER DATE
CINDY MILLER RCE NO. 58116 PROJECT MANAGER DATE
PATRICIA UEMATSU RCE NO. 36762 PRINCIPAL ENGINEER DATE

IRVINE RANCH WATER DISTRICT
BAKER WATER TREATMENT PLANT
PROJECT NO. 11218

TRABUCO CANYON WATER DISTRICT
PUMP STATION CONDUIT, CABLE & PANELBOARD SCHEDULES

DRAWING **E107**
SHEET **454** OF **632**

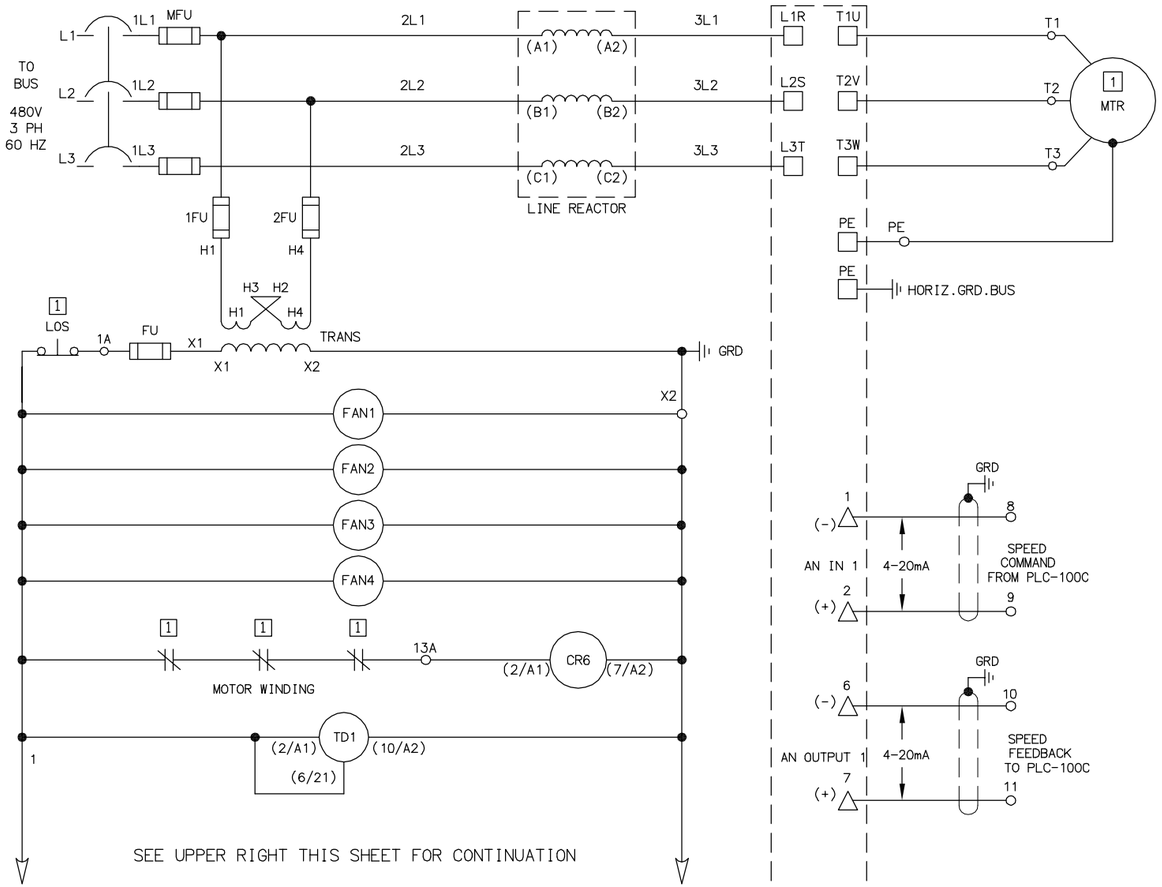

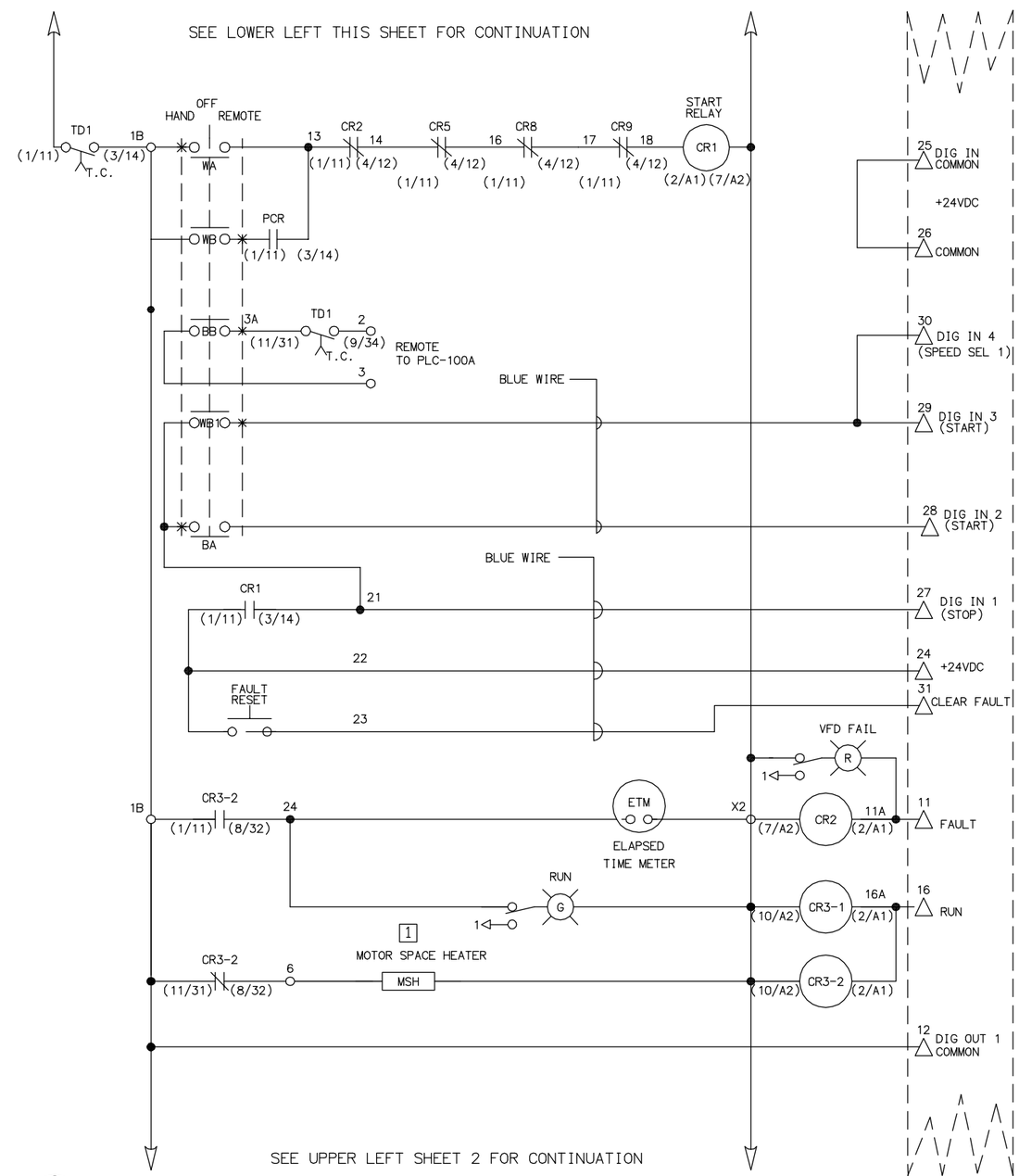

NOTES

1 REMOTE DEVICE

2 REFERENCE ALLEN BRADLEY DRAWING Y365667

VFD PUMP CONTROL SCHEMATIC

(TYP. FOR P-0210, P-0220, P-0230)

1 / –

EQUIPMENT TAG NUMBERS ON THIS DRAWING ARE PRECEDED W/ **01-RW-** UNLESS OTHERWISE LABELED

No.	DATE	REVISIONS	APPROVED

DESIGNED: YPS
DRAWN: YPS
CHECKED: RVT

RBF CONSULTING

carollo

IRVINE RANCH WATER DISTRICT

RHONDA V. TIEJERINA REE NO. 15473 ELECTRICAL ENGINEER DATE
CINDY MILLER RCE NO. 58116 PROJECT MANAGER DATE
PATRICIA UEMATSU RCE NO. 36762 PRINCIPAL ENGINEER DATE

IRVINE RANCH WATER DISTRICT
BAKER WATER TREATMENT PLANT
PROJECT NO. 11218

TRABUCO CANYON WATER DISTRICT
PUMP STATION
SCHEMATIC CONTROL DIAGRAM
(SHEET 1 OF 2)

DRAWING **E108**

SHEET **455** OF **632**

FILENAME: 6232-E108.dwg LAST UPDATED: 01/13/2012 02:56 PM LAST SAVED BY: ypsee

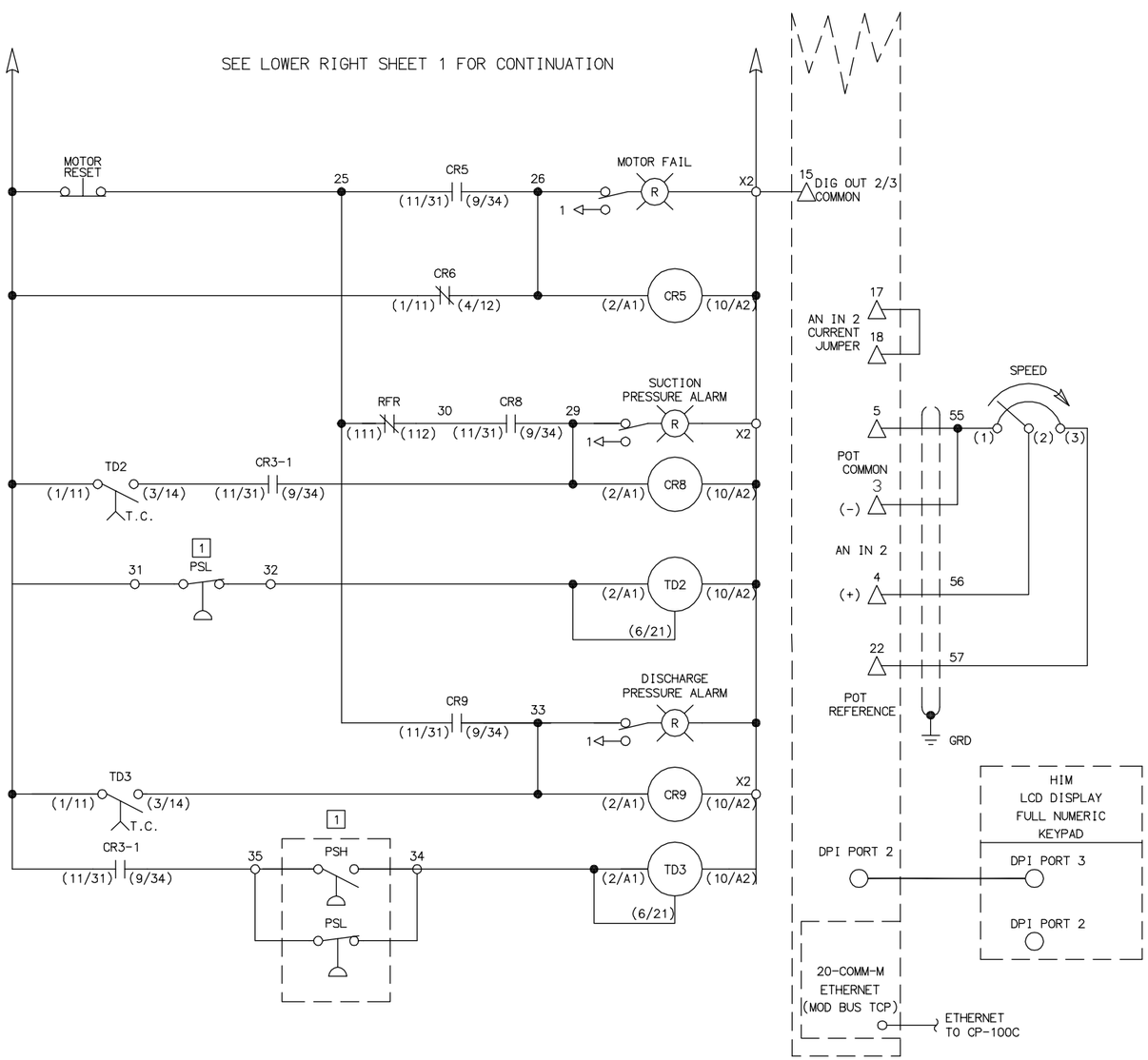

POWERFLEX 700 ADJUSTABLE FREQUENCY
AC MOTOR DRIVE
W/ 24V DC INTERFACE

NOTES

1 REMOTE DEVICE

2 REFERENCE ALLEN BRADLEY DRAWING Y365668

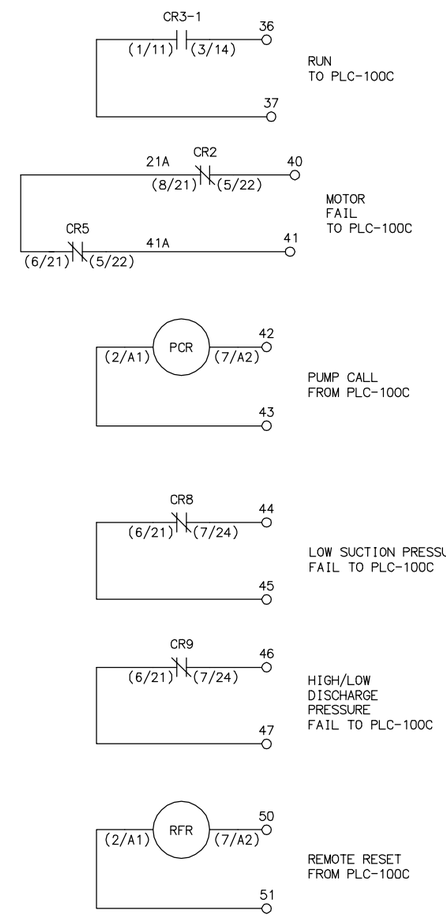

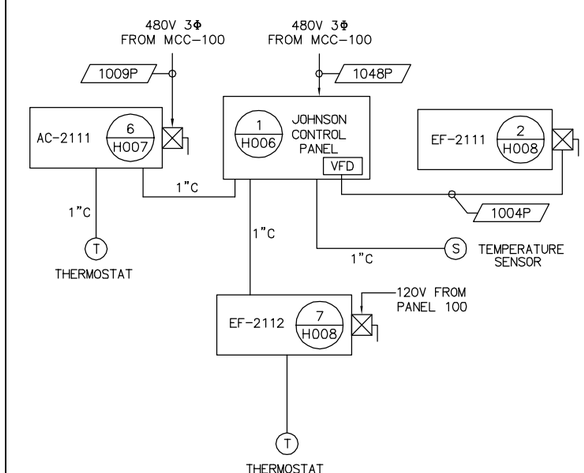

VFD PUMP CONTROL SCHEMATIC (CONT'D)

(TYP. FOR P-0210, P-0220, P-0230)

1 / –

HVAC SYSTEM BLOCK DIAGRAM DIAGRAM

(REFER TO H002 & H003 FOR SCHEMATIC DIAGRAMS AND DETAILS)

EQUIPMENT TAG NUMBERS ON THIS DRAWING ARE PRECEDED W/ **01-RW-** UNLESS OTHERWISE LABELED

No.	DATE	REVISIONS	APPROVED

DESIGNED: YPS
DRAWN: YPS
CHECKED: RVT

RBF CONSULTING

carollo

IRVINE RANCH WATER DISTRICT

RHONDA V. TIEJERINA REE NO. 15473 ELECTRICAL ENGINEER DATE
CINDY MILLER RCE NO. 58116 PROJECT MANAGER DATE
PATRICIA UEMATSU RCE NO. 36762 PRINCIPAL ENGINEER DATE

IRVINE RANCH WATER DISTRICT
BAKER WATER TREATMENT PLANT
PROJECT NO. 11218

TRABUCO CANYON WATER DISTRICT
PUMP STATION
SCHEMATIC CONTROL DIAGRAM
(SHEET 2 OF 2)

DRAWING **E109**

SHEET **456** OF **632**

FILENAME: 6232-E109.dwg
LAST UPDATED: 01/13/2012 02:56 PM
LAST SAVED BY: ypsee

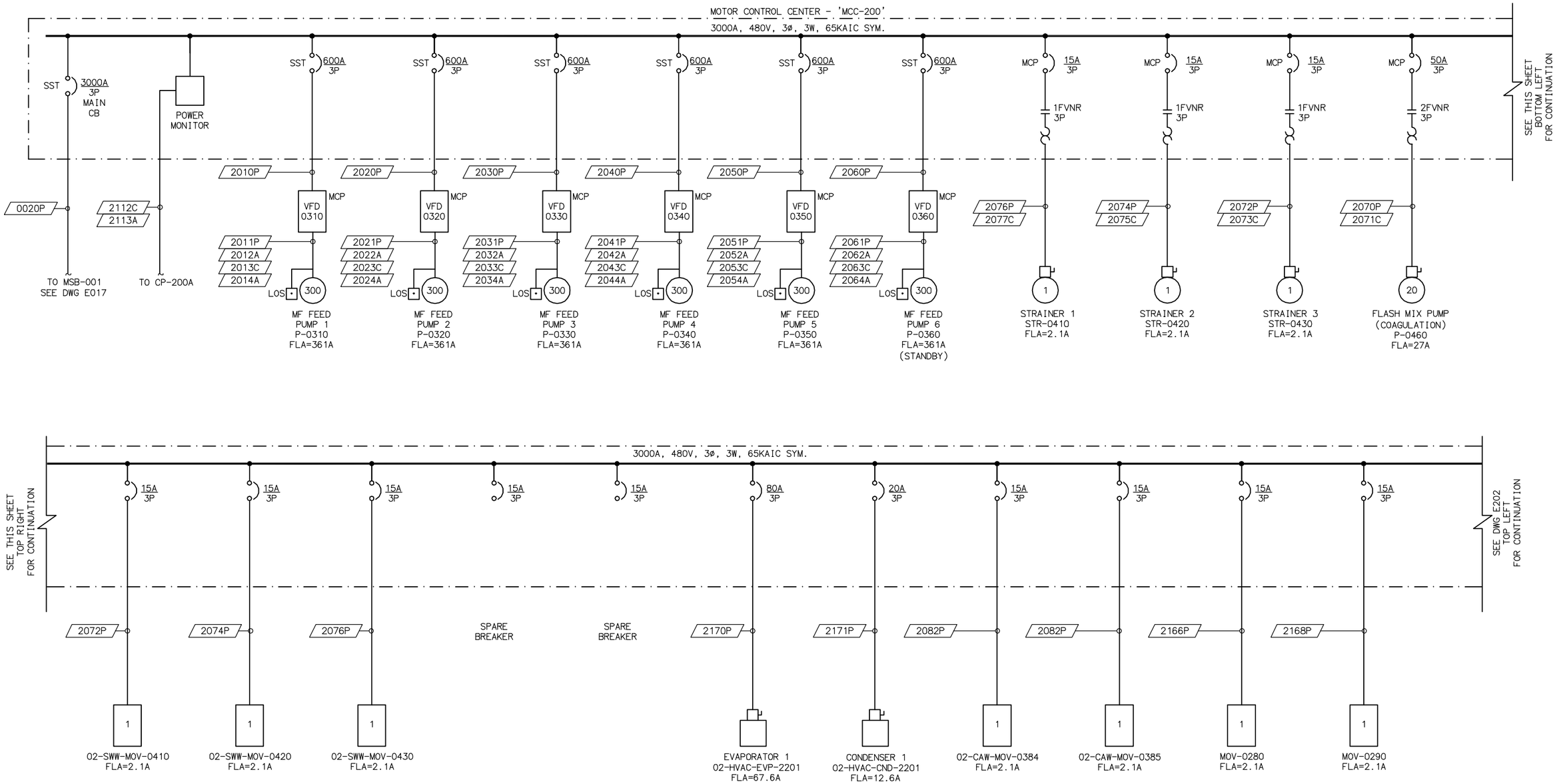

ALL VFDs SHALL BE 18-PULSE UNLESS OTHERWISE NOTED AS "*"

SINGLE LINE DIAGRAM

N.T.S.

EQUIPMENT TAG NUMBERS ON THIS DRAWING ARE PRECEDED W/ **02-MFW-** UNLESS OTHERWISE LABELED

No.	DATE	REVISIONS	APPROVED

DESIGNED: YPS
DRAWN: YPS
CHECKED: RVT

RBF CONSULTING

carollo

IRVINE RANCH WATER DISTRICT

RHONDA V. TIEJERINA REE NO. 15473 ELECTRICAL ENGINEER DATE
CINDY MILLER RCE NO. 58116 PROJECT MANAGER DATE
PATRICIA UEMATSU RCE NO. 36762 PRINCIPAL ENGINEER DATE

IRVINE RANCH WATER DISTRICT
BAKER WATER TREATMENT PLANT
PROJECT NO. 11218

FEED WATER PUMP STATION SINGLE LINE DIAGRAM 1

DRAWING **E201**

SHEET **457** OF **632**

FILENAME: 6232-E201.dwg
LAST UPDATED: 01/16/2012 02:41 PM
LAST SAVED BY: ypsee

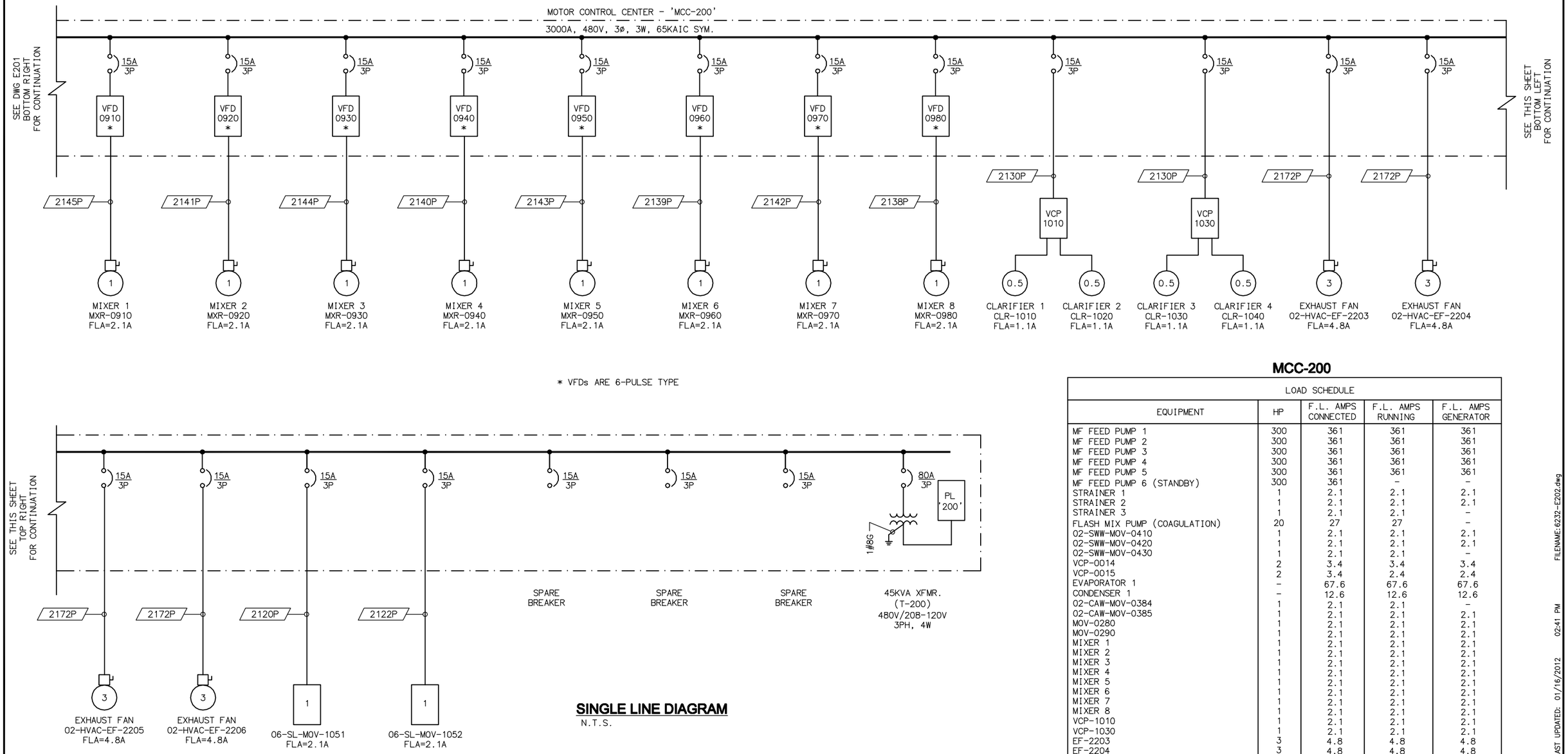

SINGLE LINE DIAGRAM
N.T.S.

MCC-200

LOAD SCHEDULE				
EQUIPMENT	HP	F.L. AMPS CONNECTED	F.L. AMPS RUNNING	F.L. AMPS GENERATOR
MF FEED PUMP 1	300	361	361	361
MF FEED PUMP 2	300	361	361	361
MF FEED PUMP 3	300	361	361	361
MF FEED PUMP 4	300	361	361	361
MF FEED PUMP 5	300	361	361	361
MF FEED PUMP 6 (STANDBY)	300	361	-	-
STRAINER 1	1	2.1	2.1	2.1
STRAINER 2	1	2.1	2.1	2.1
STRAINER 3	1	2.1	2.1	-
FLASH MIX PUMP (COAGULATION)	20	27	27	-
02-SWW-MOV-0410	1	2.1	2.1	2.1
02-SWW-MOV-0420	1	2.1	2.1	2.1
02-SWW-MOV-0430	1	2.1	2.1	-
VCP-0014	2	3.4	3.4	3.4
VCP-0015	2	3.4	2.4	2.4
EVAPORATOR 1	-	67.6	67.6	67.6
CONDENSER 1	-	12.6	12.6	12.6
02-CAW-MOV-0384	1	2.1	2.1	-
02-CAW-MOV-0385	1	2.1	2.1	2.1
MOV-0280	1	2.1	2.1	2.1
MOV-0290	1	2.1	2.1	2.1
MIXER 1	1	2.1	2.1	2.1
MIXER 2	1	2.1	2.1	2.1
MIXER 3	1	2.1	2.1	2.1
MIXER 4	1	2.1	2.1	2.1
MIXER 5	1	2.1	2.1	2.1
MIXER 6	1	2.1	2.1	2.1
MIXER 7	1	2.1	2.1	2.1
MIXER 8	1	2.1	2.1	2.1
VCP-1010	1	2.1	2.1	2.1
VCP-1030	1	2.1	2.1	2.1
EF-2203	3	4.8	4.8	4.8
EF-2204	3	4.8	4.8	4.8
EF-2205	3	4.8	4.8	4.8
EF-2206	3	4.8	4.8	4.8
06-SL-MOV-1051	1	2.1	2.1	2.1
06-SL-MOV-1052	1	2.1	2.1	2.1
45KVA XFMR	-	54	54	54
25% LARGEST LOAD		90	90	-
TOTAL LOADS		2508.3	2147.3	2024

EQUIPMENT TAG NUMBERS ON THIS DRAWING ARE PRECEDED W/ **06-MFWW-** UNLESS OTHERWISE LABELED

No.	DATE	REVISIONS	APPROVED

DESIGNED: YPS
DRAWN: YPS
CHECKED: RVT

RBF CONSULTING
carollo
IRVINE RANCH WATER DISTRICT

RHONDA V. TIEJERINA REE NO. 15473 ELECTRICAL ENGINEER DATE
CINDY MILLER RCE NO. 58116 PROJECT MANAGER DATE
PATRICIA UEMATSU RCE NO. 36762 PRINCIPAL ENGINEER DATE

IRVINE RANCH WATER DISTRICT
BAKER WATER TREATMENT PLANT
PROJECT NO. 11218

FEED WATER PUMP STATION SINGLE LINE DIAGRAM 2

DRAWING **E202**
SHEET **458** OF **632**

LAST SAVED BY: ypsee LAST UPDATED: 01/16/2012 02:41 PM FILENAME:6232-E202.dwg

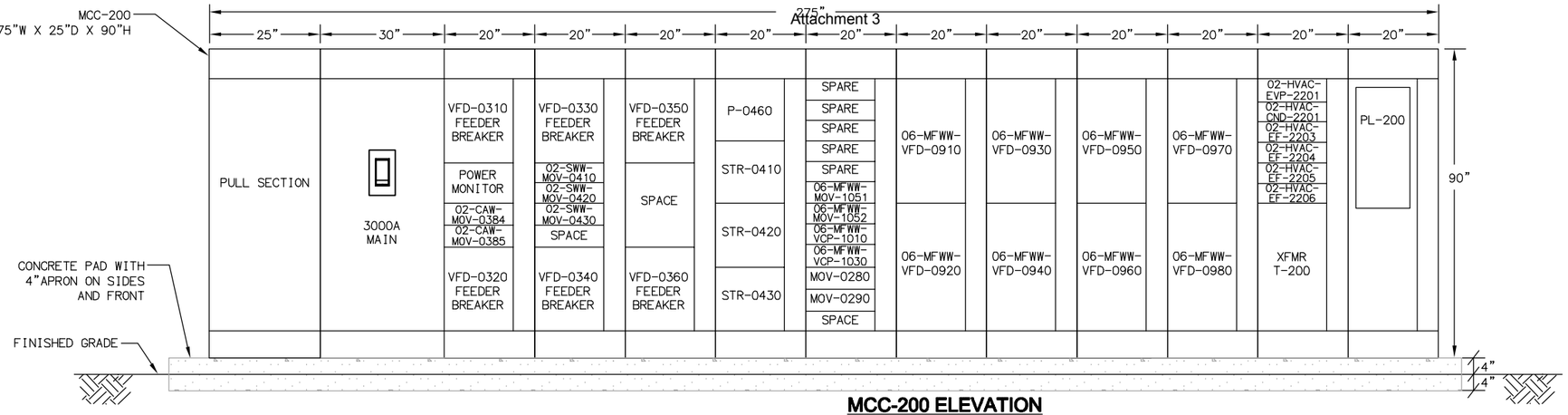

MCC-200 ELEVATION
NTS

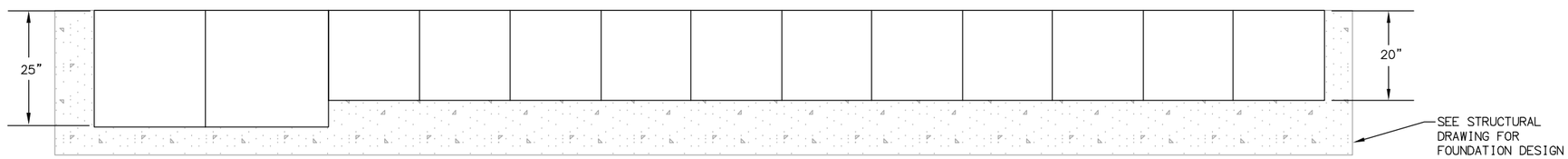

MCC-200 FLOOR PLAN
NTS

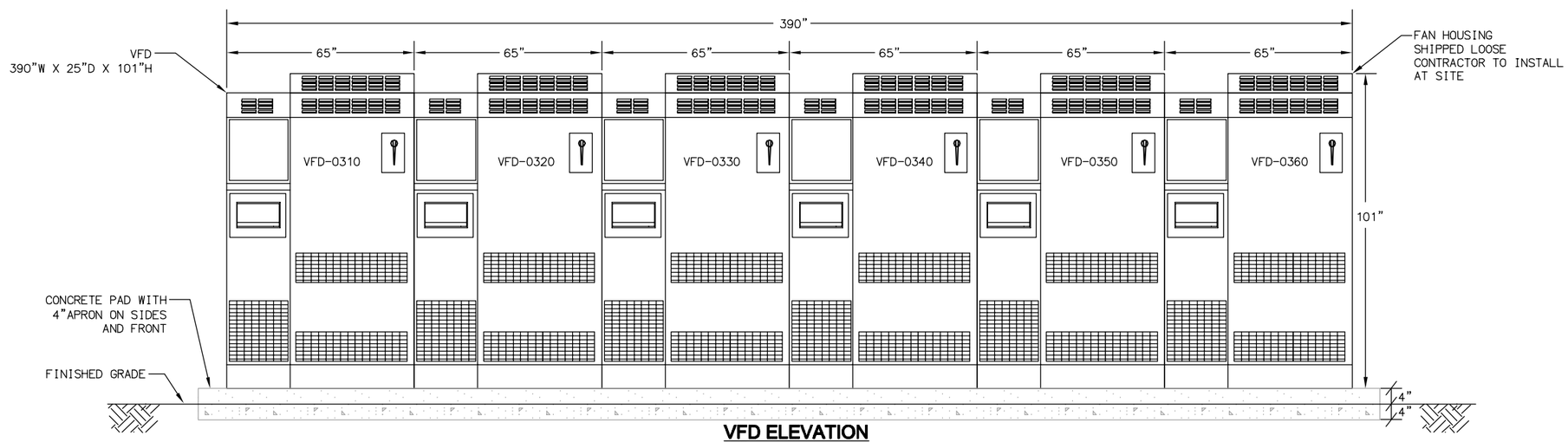

VFD ELEVATION
NTS

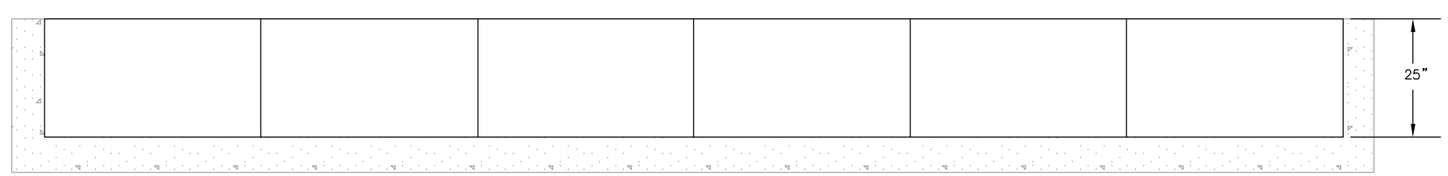

VFD FLOOR PLAN
NTS

EQUIPMENT TAG NUMBERS ON THIS DRAWING ARE PRECEDED W/ **02-MFW-** UNLESS OTHERWISE LABELED

No.	DATE	REVISIONS	APPROVED

DESIGNED: YPS
DRAWN: YPS
CHECKED: RVT

RBF CONSULTING
carollo
IRVINE RANCH WATER DISTRICT

RHONDA V. TIEJERINA REE NO. 15473 ELECTRICAL ENGINEER DATE
CINDY MILLER RCE NO. 58116 PROJECT MANAGER DATE
PATRICIA UEMATSU RCE NO. 36762 PRINCIPAL ENGINEER DATE

IRVINE RANCH WATER DISTRICT
BAKER WATER TREATMENT PLANT
PROJECT NO. 11218

FEED WATER PUMP STATION EQUIPMENT ELEVATIONS

DRAWING **E203**
SHEET **459** OF **632**

FILENAME: 6232-E203.dwg
LAST UPDATED: 01/16/2012 02:41 PM
LAST SAVED BY: ypsee

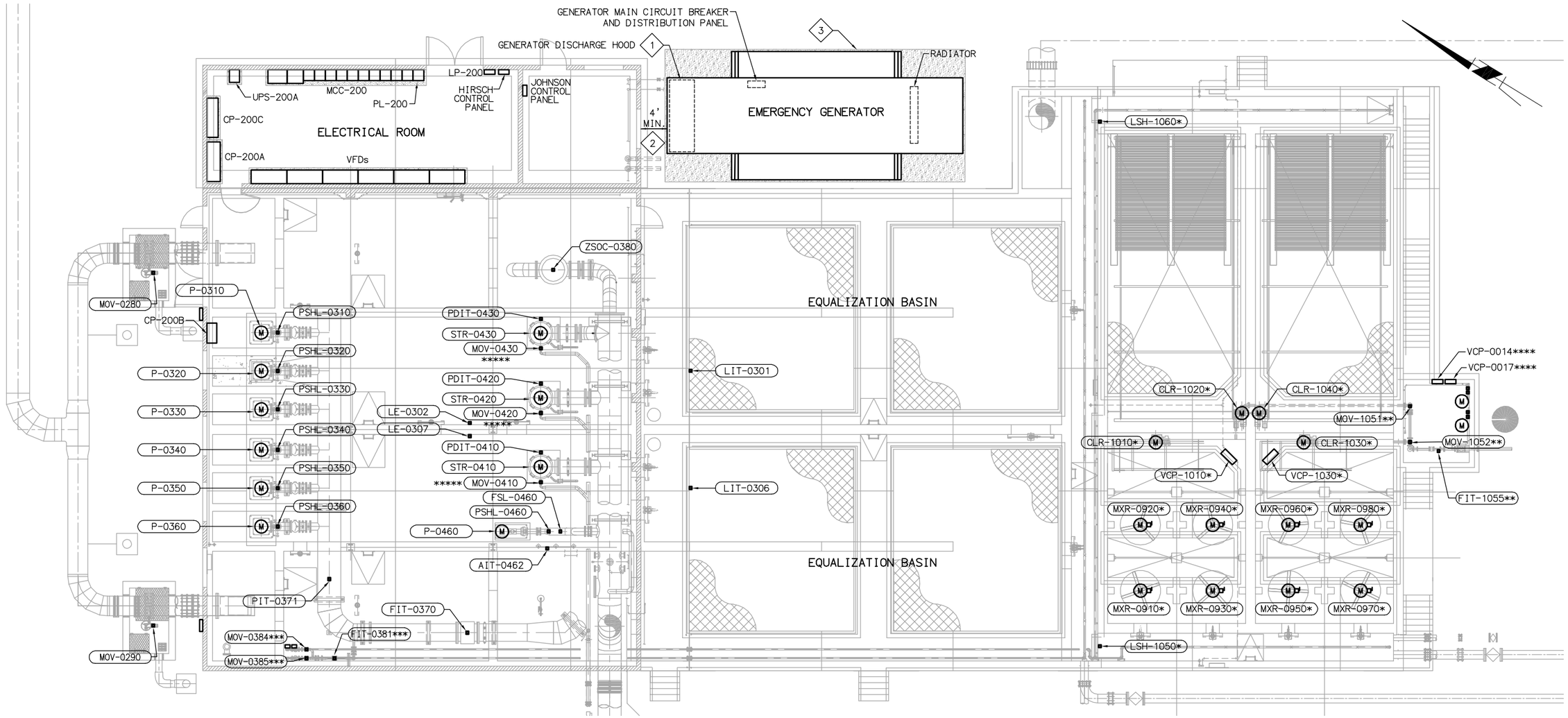

OVERALL ELECTRICAL PLAN

SCALE: 1/8" = 1'-0"

NOTES:

1. GENERATOR EXHAUST SHALL VENT UPWARD INTO ATMOSPHERE.
2. INSTALL GENERATOR TO PROVIDE MINIMUM 4 FEET OF CLEARANCE FROM FEEDWATER PUMP STATION HVAC ROOM EXHAUST LOUVERS TO GENERATOR SOUND ENCLOSURE.
3. SEE STRUCTURAL DRAWING FOR FOUNDATION DESIGN.

* EQUIPMENT TAG NUMBERS ARE PRECEDED WITH 06-MFWW-
** EQUIPMENT TAG NUMBERS ARE PRECEDED WITH 06-SL-
*** EQUIPMENT TAG NUMBERS ARE PRECEDED WITH 02-CAW-
**** EQUIPMENT TAG NUMBERS ARE PRECEDED WITH 06-D-
***** EQUIPMENT TAG NUMBERS ARE PRECEDED WITH 02-SWW-

EQUIPMENT TAG NUMBERS ON THIS DRAWING ARE PRECEDED W/ **02-MFW-** UNLESS OTHERWISE LABELED

No.	DATE	REVISIONS	APPROVED

DESIGNED: YPS
DRAWN: YPS
CHECKED: RVT

RBF CONSULTING

carollo

IRVINE RANCH WATER DISTRICT

RHONDA V. TIEJERINA REE NO. 15473 ELECTRICAL ENGINEER DATE
CINDY MILLER RCE NO. 58116 PROJECT MANAGER DATE
PATRICIA UEMATSU RCE NO. 36762 PRINCIPAL ENGINEER DATE

IRVINE RANCH WATER DISTRICT
BAKER WATER TREATMENT PLANT
PROJECT NO. 11218

FEED WATER PUMP STATION OVERALL ELECTRICAL PLAN

DRAWING **E204**

SHEET **460** OF **632**

FILENAME: 6232-E204.dwg
LAST UPDATED: 01/23/2012 09:42 AM
LAST SAVED BY: ypsee

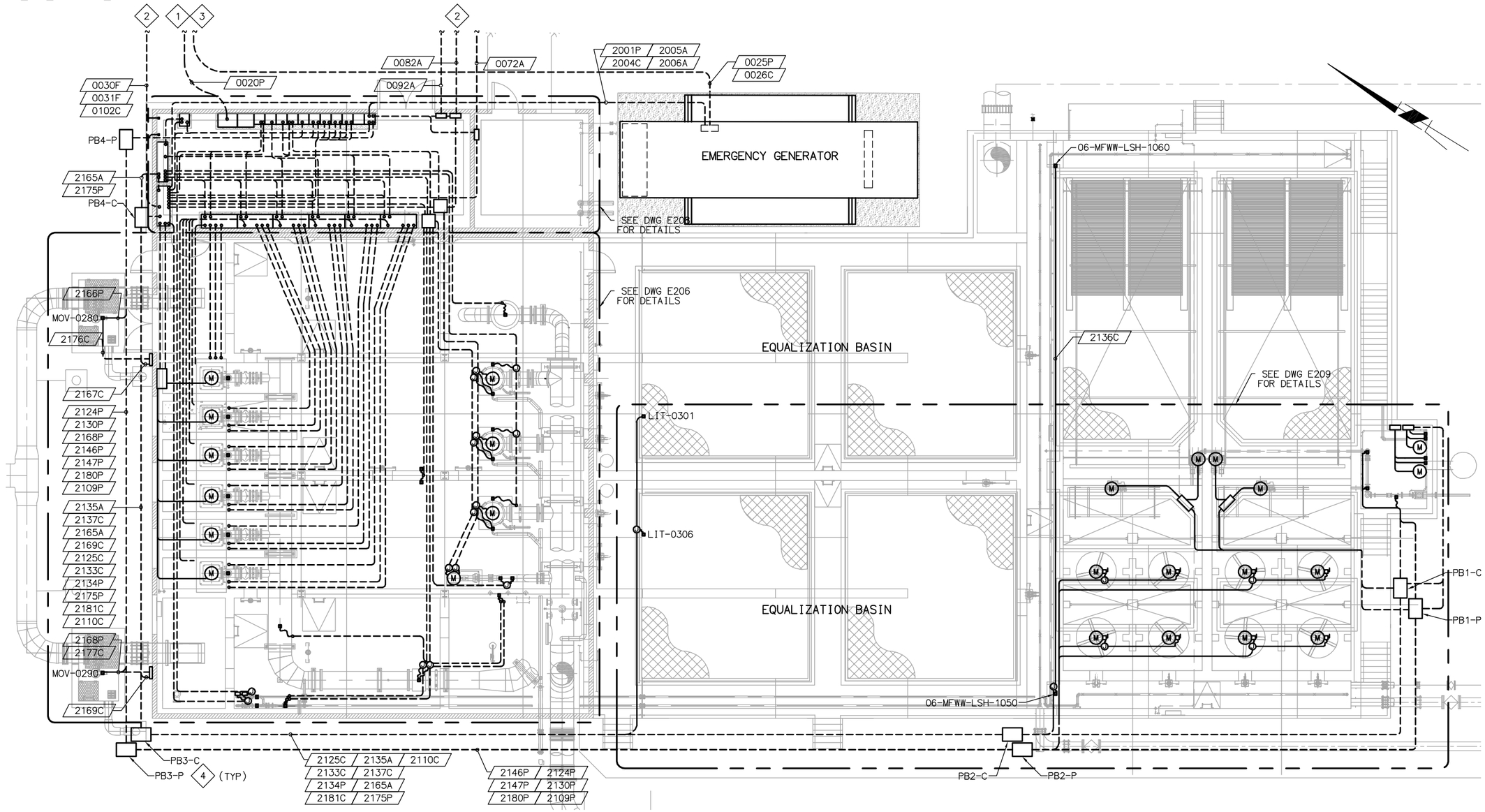

OVERALL ELECTRICAL PLAN

SCALE: 1/8" = 1'-0"

NOTES:

1. TO MSB-001. SEE DWG E011 FOR CONTINUATION.
2. TO COMMUNICATION PULLBOX 1. SEE DWG E011 FOR CONTINUATION.
3. TO ATS-001 LOCATED IN MSB-001. SEE DWG E011 FOR CONTINUATION.
4. CONTRACTOR TO PROVIDE AND INSTALL A 3'-0"L X 2'-0"W PULL BOX

EQUIPMENT TAG NUMBERS ON THIS DRAWING ARE PRECEDED W/ **02-MFW-** UNLESS OTHERWISE LABELED

No.	DATE	REVISIONS	APPROVED

DESIGNED: YPS
DRAWN: YPS
CHECKED: RVT

RBF CONSULTING

carollo

IRVINE RANCH WATER DISTRICT

RHONDA V. TIEJERINA REE NO. 15473 ELECTRICAL ENGINEER DATE
CINDY MILLER RCE NO. 58116 PROJECT MANAGER DATE
PATRICIA UEMATSU RCE NO. 36762 PRINCIPAL ENGINEER DATE

IRVINE RANCH WATER DISTRICT
BAKER WATER TREATMENT PLANT
PROJECT NO. 11218

FEED WATER PUMP STATION OVERALL POWER PLAN

DRAWING **E205**
SHEET **461** OF **632**

FILENAME: 6232-E205.dwg
LAST UPDATED: 01/25/2012 03:29 PM
LAST SAVED BY: ypsee

NOTES:

1. CONDUIT TO BE INSTALLED OVERHEAD.
2. 1"C - 2#14
3. 1"C - 3#10, 1#10G
4. 1"C - 10#14
5. 1"C - (2/C#16) SHLD
6. 1"C - 2#10, 1#10G
7. ALL CONDUIT IN PUMP ROOM SHALL BE INSTALLED IN THE FLOOR SLAB UNLESS OTHERWISE NOTED. CONDUIT ROUTING SHOWN DIAGRAMMATIC AND FOR REFERENCE ONLY. CONTRACTOR TO SUBMIT CONDUIT LAYOUT INCLUDING MOTOR TERMINAL BOX LOCATION FOR ENGINEER APPROVAL PRIOR TO INSTALLATION.
8. SURFACE MOUNT PSHL CONDUIT TO THE CONCRETE BASE OF THE PUMP. ROUTE CONDUIT TO JUNCTION BOX AT LOS.
9. REMOTE CONTROL PANEL FOR MOVs. CONTRACTOR TO WALL MOUNT PANELS AS SHOWN.
10. ALL JUNCTION BOX LOCATION ARE SHOWN DIAGRAMMATIC ONLY. JUNCTION BOX SHALL BE INSTALL BASED ON FIELD CONDITIONS. FIELD RELOCATE IF REQUIRED.
11. TO HIRSCH CONTROL PANEL. SEE DWG E208 FOR CONTINUATION.
12. 1"C WITH POWER WIRING & 1"C WITH SHIELDED WIRING. SEE DWG E020 FOR WIRE REQUIREMENTS
13. HIRSCH DOOR ACCESS MODULE. SEE DWG E020 FOR DETAILS.
14. PROVIDE AND INSTALL HATCH INTRUSION SWITCH AS SHOWN.
15. 1"C - 12#14 FOR HATCH INTRUSION SWITCHES TO CP-300A
16. PROVIDE AND INSTALL A DISCONNECT SWITCH FOR ALL MOTORS BASED ON SINGLE LINE DIAGRAM UNLESS OTHERWISE NOTED.

* EQUIPMENT TAG NUMBER ARE PRECEDED WITH O2-CAW-
** EQUIPMENT TAG NUMBER ARE PRECEDED WITH O2-SWW-
*** EACH LE CONSISTS OF LSLL, LSL, LSH & LSHH

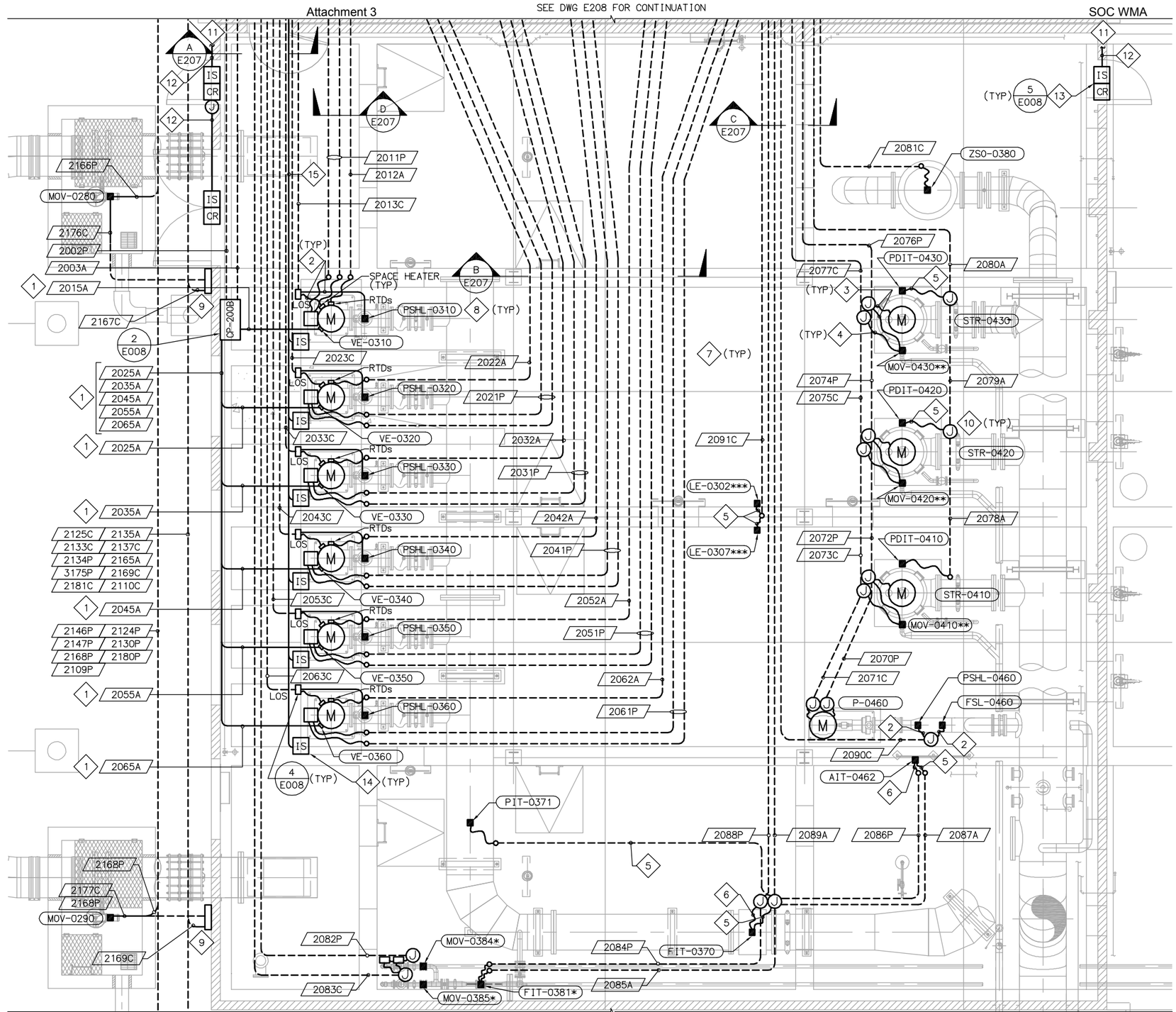

PUMP ROOM ELECTRICAL PLAN

SCALE: 1/4" = 1'-0"

EQUIPMENT TAG NUMBERS ON THIS DRAWING ARE PRECEDED W/ **O2-MFW-** UNLESS OTHERWISE LABELED

No.	DATE	REVISIONS	APPROVED

DESIGNED: YPS
DRAWN: YPS
CHECKED: RVT

RBF CONSULTING

carollo

IRVINE RANCH WATER DISTRICT

RHONDA V. TIEJERINA	REE NO. 15473	ELECTRICAL ENGINEER	DATE
CINDY MILLER	RCE NO. 58116	PROJECT MANAGER	DATE
PATRICIA UEMATSU	RCE NO. 36762	PRINCIPAL ENGINEER	DATE

IRVINE RANCH WATER DISTRICT
BAKER WATER TREATMENT PLANT
PROJECT NO. 11218

FEED WATER PUMP STATION PUMP ROOM POWER PLAN

DRAWING **E206**

SHEET **462** OF **632**

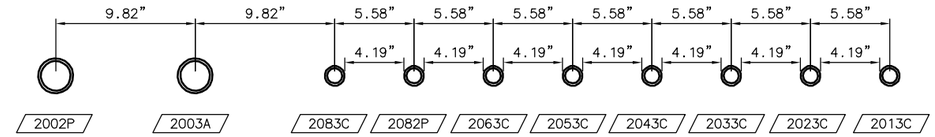

SECTION A –

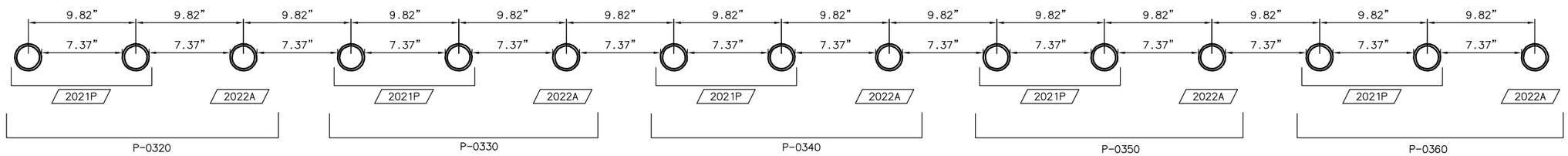

SECTION B –

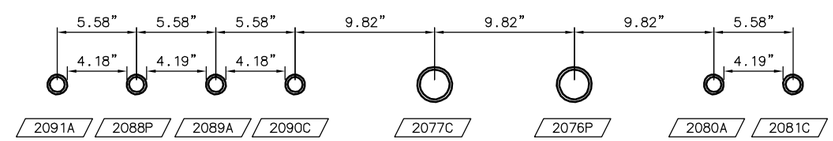

SECTION C –

NOTES:

1. MINIMUM ON CENTER HORIZONTAL SPACING OF PARALLEL CONDUIT IS 4 TIMES OUTSIDE DIAMETER OF THE LARGER CONDUIT. LAYOUT SHOWN 2" CONDUIT WITH 2.455" OD & 1" CONDUIT WITH 1.395" OD.

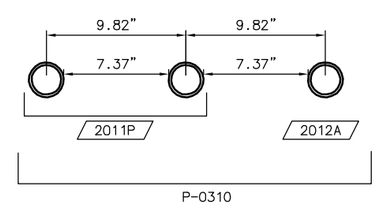

SECTION D –

EQUIPMENT TAG NUMBERS ON THIS DRAWING ARE PRECEDED W/ **02-MFW-** UNLESS OTHERWISE LABELED

PUMP ROOM CONDUIT CROSS SECTION PLAN

SCALE: 3/16" = 1'-0"

No.	DATE	REVISIONS	APPROVED

DESIGNED: YPS
DRAWN: YPS
CHECKED: RVT

RBF CONSULTING

carollo

IRVINE RANCH WATER DISTRICT

RHONDA V. TIEJERINA REE NO. 15473 ELECTRICAL ENGINEER DATE
CINDY MILLER RCE NO. 58116 PROJECT MANAGER DATE
PATRICIA UEMATSU RCE NO. 36762 PRINCIPAL ENGINEER DATE

IRVINE RANCH WATER DISTRICT
BAKER WATER TREATMENT PLANT
PROJECT NO. 11218

FEED WATER PUMP STATION PUMP ROOM SECTION PLAN

DRAWING **E207**

SHEET **463** OF **632**

LAST SAVED BY: ypsee LAST UPDATED: 01/13/2012 03:13 PM FILENAME: 6232-E207.dwg

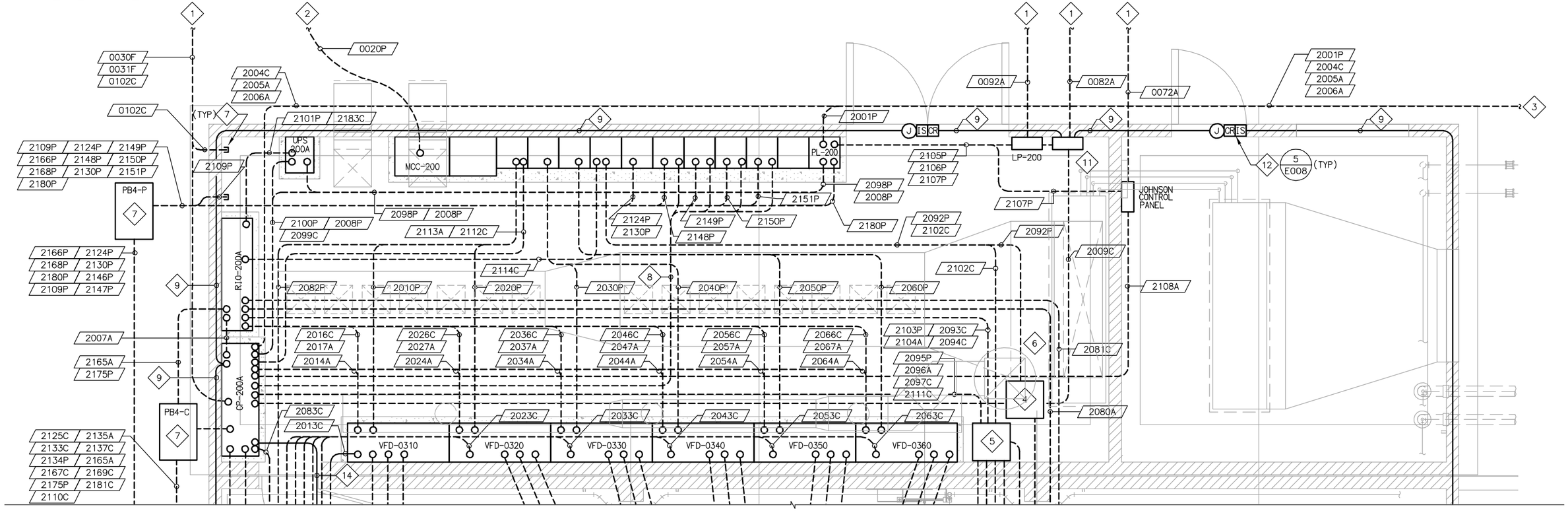

ELECTRICAL ROOM POWER PLAN

SCALE: 3/8" = 1'-0"

NOTES:

1. TO COMMUNICATION PULL BOX 1. SEE DWG E011 FOR CONTINUATION.
2. TO ATS-001 IN MSB-001. SEE DWG E011 FOR CONTINUATION.
3. TO GENERATOR AUX PANEL AND CONTROL PANEL. SEE DWG E011 FOR GENERATOR LOCATION.
4. EMBEDDED POWER PULL BOX. 2'L X 2'W X 1'D
5. EMBEDDED CONTROL PULL BOX. 2'L X 2'W X 1'D
6. CONDUIT ROUTING SHOWN DIAGRAMMATIC ONLY. ALL CONDUIT TO EMBEDDED PULL BOX SHALL BE INSTALLED IN FLOOR SLAB. ALL OUT GOING CONDUIT FROM THE EMBEDDED PULL BOX SHALL BE INSTALLED UNDER FLOOR SLAB.
7. CONTRACTOR TO PROVIDE AND INSTALL A 3-0"L X 2'-0"W PULL BOX AS SHOWN.
8. 2152C / 2153A / 2154A
   2155C / 2156A / 2157A
   2158C / 2159A / 2160A
   2161C / 2162A / 2163A
9. 1"C WITH POWER WIRING & 1"C WITH SHEILDED WIRING. SEE DWG E020 FOR WIRE REQUIREMENTS
10. TO SECURITY CONTROL PANEL AT CHEMICAL BUILDING & TREATMENT BUILDING. SEE DWG E011 FOR CONTINUATION.
11. PROVIDE AND INSTALL A SECURITY CONTROL PANEL AS SHOWN. THE SECURITY CONTROL PANEL SHALL CONSISTS OF HIRSCH CONTROLLER. SEE DWG E020 FOR CONTROL BLOCK DIAGRAM
12. HIRSCH DOOR ACCESS MODULE. SEE DWG E020 FOR DETAILS.
13. STUB UP CONDUIT MIN 6" AFF AND CAP OFF END.
14. 1"C - 12#14 FOR HATCH INTRUSION SWITCHES TO CP-300A

EQUIPMENT TAG NUMBERS ON THIS DRAWING ARE PRECEDED W/ **02-MFW-** UNLESS OTHERWISE LABELED

No.	DATE	REVISIONS	APPROVED

DESIGNED: YPS
DRAWN: YPS
CHECKED: RVT

RBF CONSULTING

carollo

IRVINE RANCH WATER DISTRICT

RHONDA V. TIEJERINA REE NO. 15473 ELECTRICAL ENGINEER DATE
CINDY MILLER RCE NO. 58116 PROJECT MANAGER DATE
PATRICIA UEMATSU RCE NO. 36762 PRINCIPAL ENGINEER DATE

IRVINE RANCH WATER DISTRICT
BAKER WATER TREATMENT PLANT
PROJECT NO. 11218

FEED WATER PUMP STATION ELECTRICAL ROOM POWER PLAN

DRAWING **E208**

SHEET **464** OF **632**

LAST SAVED BY: ypsee LAST UPDATED: 01/18/2012 10:51 AM FILENAME: 6232-E208.dwg

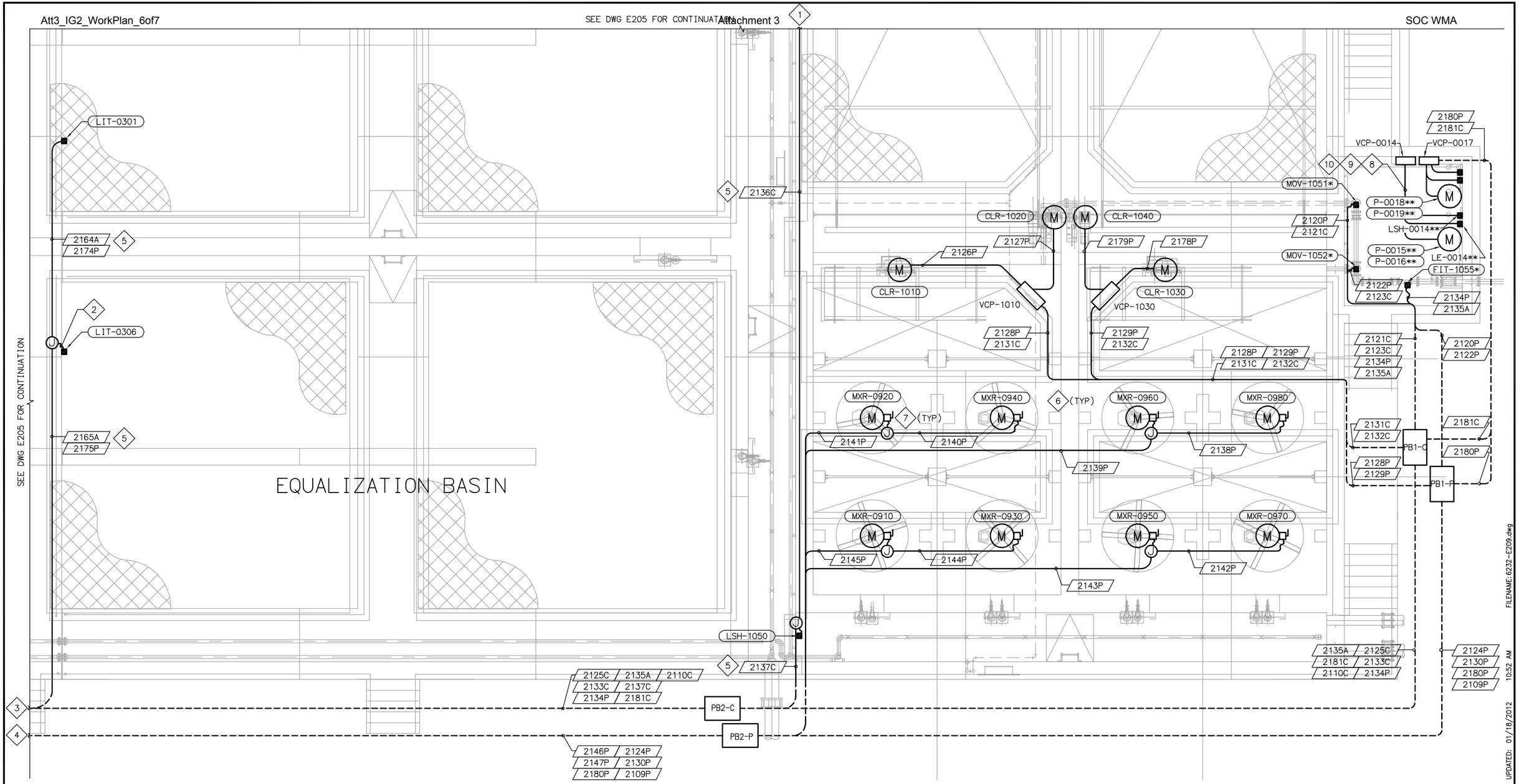

MFWW AREA ELECTRICAL PLAN

SCALE: 1/4" = 1'-0"

* EQUIPMENT TAG NUMBER ARE PRECEDED WITH 06-SL-
** EQUIPMENT TAG NUMBER ARE PRECEDED WITH 06-D-

NOTES:

1. TO LSH-1060. SEE DWG E205 FOR CONTINUATION.
2. 1"C - (2/C#16) SHLD
3. TO PB3-C. SEE DWG E205 FOR CONTINUATION.
4. TO PB3-P. SEE DWG E205 FOR CONTINUATION.
5. CONTRACTOR TO SURFACE MOUNT CONDUIT ON TOP OF ROOF AS SHOWN.
6. CONTRACTOR TO ROUTE CONDUIT IN SLAB AS SHOWN WHERE POSSIBLE.
7. CONTRACTOR TO PROVIDE AND INSTALL A LOCKABLE SWITCH.
8. 1"C - 4#10, 1#10G FROM VCP-0014 TO SUMP PUMPS. TYPICAL FOR VCP-0014 & VCP-0017.
9. 1"C - 8#14 FROM VCP-0014 TO LE-0014. TYPICAL FOR VCP-0014 & VCP-0017.
10. 1"C - 2#14 FROM CP-200A (VIA VCP-0014) TO LSH-0014. TYPICAL FOR VCP-0014 & VCP-0017.

EQUIPMENT TAG NUMBERS ON THIS DRAWING ARE PRECEDED W/**06-MFWW-** UNLESS OTHERWISE LABELED

No.	DATE	REVISIONS	APPROVED

DESIGNED: YPS
DRAWN: YPS
CHECKED: RVT

RBF CONSULTING
carollo
IRVINE RANCH WATER DISTRICT

RHONDA V. TIEJERINA REE NO. 15473 ELECTRICAL ENGINEER DATE
CINDY MILLER RCE NO. 58116 PROJECT MANAGER DATE
PATRICIA UEMATSU RCE NO. 36762 PRINCIPAL ENGINEER DATE

IRVINE RANCH WATER DISTRICT
BAKER WATER TREATMENT PLANT
PROJECT NO. 11218

FEED WATER PUMP STATION MFWW AREA POWER PLAN

DRAWING **E209**
SHEET **465** OF **632**

FILENAME: 6232-E209.dwg
LAST UPDATED: 01/18/2012 10:52 AM
LAST SAVED BY: ypsee

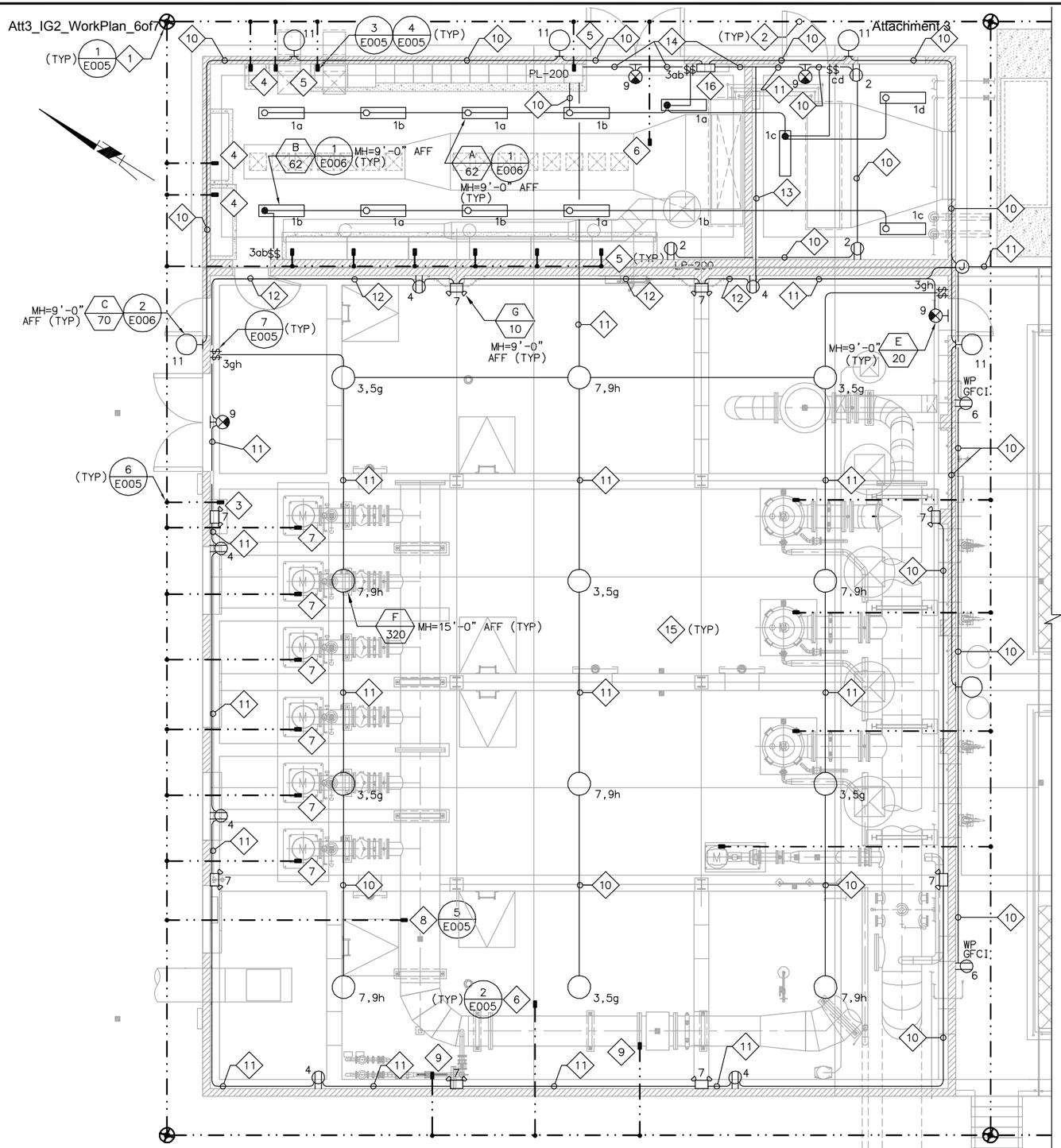

PARTIAL LIGHTING & GROUNDING PLAN

SCALE: 3/16" = 1'-0"

NOTES:

1. PROVIDE A CAST IRON LID FOR GROUND ROD WELLS.
2. #4/O BARE COPPER GROUNDING CONDUCTOR.
3. ROUTE #2 GROUNDING WIRE TO MOTOR VIBRATION MONITORING PANEL.
4. ROUTE #4/O GROUNDING WIRE THROUGH SLAB AND CONNECT TO CONTROL CABINET, MEMBRANE VCP REMOTE I/O CABINET AND UPS ENCLOSURE.
5. ROUTE #4/O GROUNDING WIRE THROUGH SLAB AND CONNECT TO VFD AND MCC-200.
6. ROUTE #4/O GROUNDING WIRE AND CONNECT TO STRUCTURAL REBAR.
7. ROUTE #4/O GROUNDING WIRE THROUGH SLAB AND CONNECT TO MOTOR FRAMES.
8. ROUTE #4/O GROUND WIRE THROUGH SLAB AND CONNECT TO PIPING SYSTEM.
9. ROUTE #2 GROUNDING WIRE AND CONNECT TO EACH FLOWMETER GROUND RING PER MANUFACTURER'S INSTRUCTIONS.
10. 1"C - 2#10, 1#10G
11. 1"C - 4#10, 1#10G
12. 1"C - 6#10. 1#10G
13. 1"C - 10#10, 1#10G
14. 1"C - 14#10, 1#10G
15. ALL LIGHTS (EXIT, EMERGENCY, HIGH BAY, WALLPACK) & RECEPTACLES SHALL BE POWERED FROM PL-200. CONDUIT ROUTING SHOWN ARE DIAGRAMMATIC AND FOR REFERENCE ONLY. CONTRACTOR TO PROVIDE AND INSTALL A WORKABLE LIGHTING & RECEPTACLE SYSTEM AS SHOWN. ALL LIGHTING & RECEPTACLES JUNCTION BOX SHALL BE INSTALLED BASED ON FIELD CONDITIONS. FIELD RELOCATED IF REQUIRED.
16. SEE DWG E022 FOR CONNECTION DETAILS.

FILENAME: 6232-E210.dwg
LAST UPDATED: 01/18/2012 10:53 AM
LAST SAVED BY: ypsee

No.	DATE	REVISIONS	APPROVED

DESIGNED: YPS
DRAWN: YPS
CHECKED: RVT

RBF CONSULTING
carollo
IRVINE RANCH WATER DISTRICT

RHONDA V. TIEJERINA REE NO. 15473 ELECTRICAL ENGINEER DATE
CINDY MILLER RCE NO. 58116 PROJECT MANAGER DATE
PATRICIA UEMATSU RCE NO. 36762 PRINCIPAL ENGINEER DATE

IRVINE RANCH WATER DISTRICT
BAKER WATER TREATMENT PLANT
PROJECT NO. 11218

FEED WATER PUMP STATION
LIGHTING & GROUNDING PLAN I

DRAWING E210
SHEET 466 OF 632

NOTES:

1. PROVIDE A CAST IRON LID FOR GROUND ROD WELLS.
2. #4/0 BARE COPPER GROUNDING CONDUCTOR.
3. ROUTE #4/0 GROUNDING WIRE AND CONNECT TO VCP ENCLOSURE.
4. ROUTE #4/0 GROUND WIRE TO VAULT STRUCTURAL REBAR.
5. GENERATOR IS A SEPARATELY DERIVED SOURCE IN THIS INSTALLATION. GENERATOR NEUTRAL SHALL BE GROUNDED TO THE GROUND ROD LOCATED NEXT TO THE ENCLOSURE AND BE BONDED TO THE ENCLOSURE. THE ENCLOSURE SHALL BE ALSO BONDED TO THE SYSTEM GROUND THROUGH THE GROUND CONDUCTOR.
6. ROUTE #4/0 GROUNDING WIRE AND CONNECT TO STRUCTURAL REBAR.
7. ROUTE #4/0 GROUNDING WIRE THROUGH SLAB AND CONNECT TO MOTOR FRAMES.
8. CONTRACTOR TO PROVIDE AND INSTALL WEATHERPROOF RECEPTACLE AT 18" AFG AS SHOWN ON DRAWING.
9. ROUTE #2 GROUNDING WIRE AND CONNECT TO EACH FLOWMETER GROUND RING PER MANUFACTURER'S INSTRUCTIONS.
10. 1"C - 2#10, 1#10G
11. 1"C - 4#10, 1#10G
12. LIGHT LOCATED IN THE VAULT.

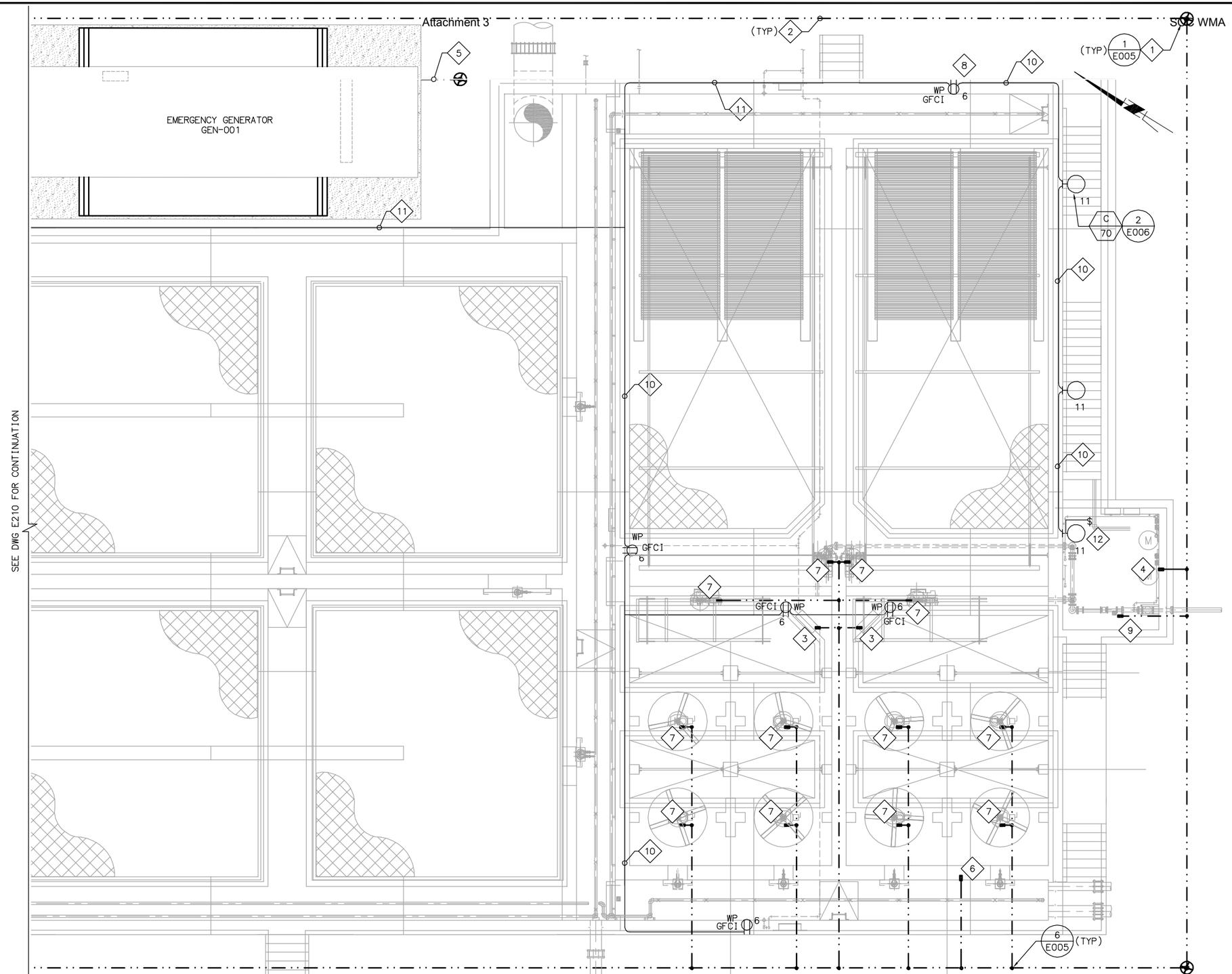

PARTIAL LIGHTING & GROUNDING PLAN

SCALE: 3/16" = 1'-0"

LAST SAVED BY: ypsee LAST UPDATED: 01/31/2012 02:35 PM FILENAME: 6232-E211.dwg

No.	DATE	REVISIONS	APPROVED

DESIGNED: YPS
DRAWN: YPS
CHECKED: RVT

RBF CONSULTING

carollo

IRVINE RANCH WATER DISTRICT

RHONDA V. TIEJERINA REE NO. 15473 ELECTRICAL ENGINEER DATE
CINDY MILLER RCE NO. 58116 PROJECT MANAGER DATE
PATRICIA UEMATSU RCE NO. 36762 PRINCIPAL ENGINEER DATE

IRVINE RANCH WATER DISTRICT
BAKER WATER TREATMENT PLANT
PROJECT NO. 11218

FEED WATER PUMP STATION LIGHTING & GROUNDING PLAN II

DRAWING **E211**

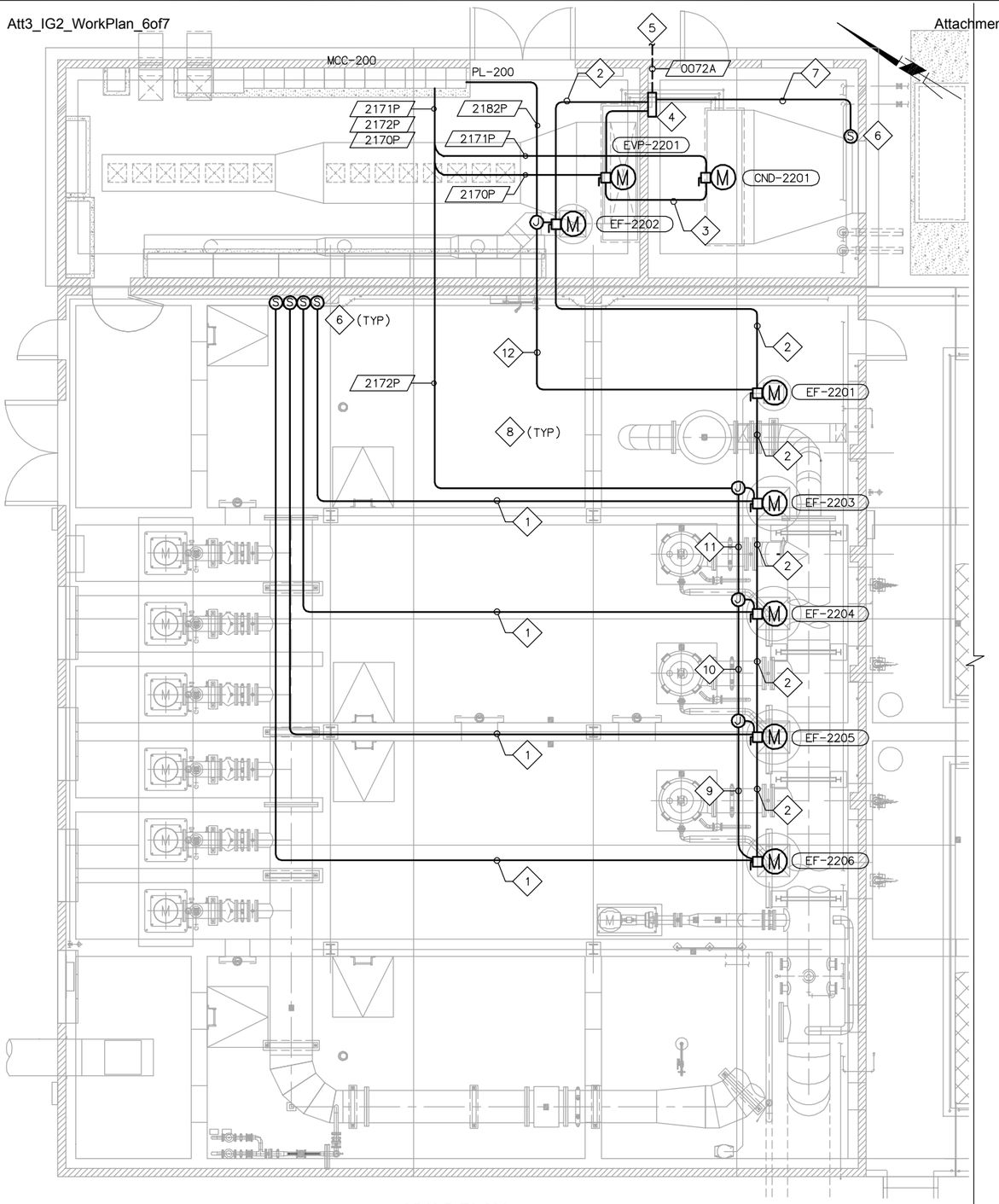

HVAC PLAN

SCALE: 3/16" = 1'-0"

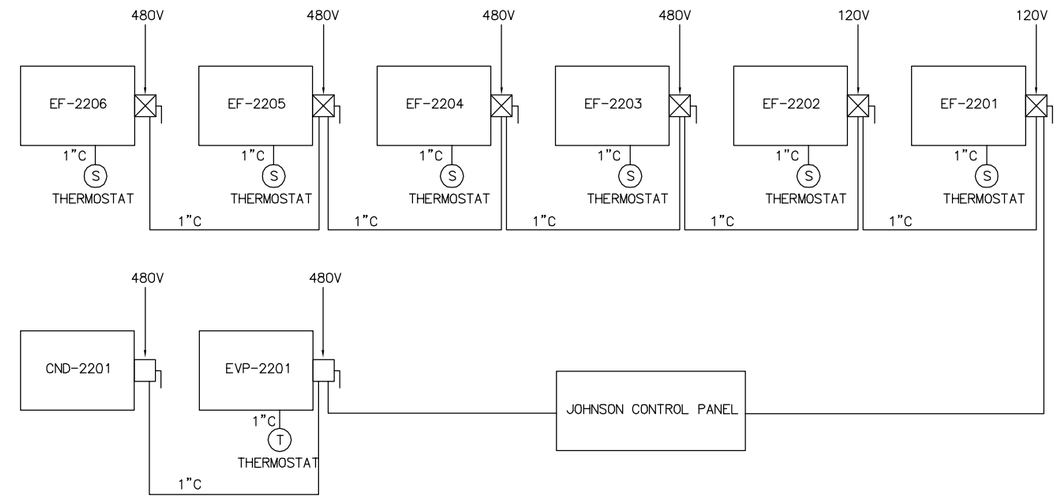

HVAC SYSTEM BLOCK DIAGRAM

(REFER TO H006 & H007 FOR SCHEMATIC DIAGRAMS AND DETAILS)

NOTES:

1. 1" CONDUIT ONLY FROM EXHAUST FAN TO TEMPERATURE SENSOR. SEE DWG H006 & H007 FOR NUMBER OF WIRING REQUIRED FOR HVAC EQUIPMENT.
2. 1" CONDUIT ONLY FROM EXHAUST FANS TO JOHNSON CONTROL PANEL. SEE DWG H006 & H007 FOR NUMBER OF WIRING REQUIRED FOR HVAC EQUIPMENT.
3. 1" CONDUIT ONLY FROM EVP & CND TO JOHNSON CONTROL PANEL. SEE DWG H006 & H007 FOR NUMBER OF WIRING REQUIRED FOR HVAC EQUIPMENT.
4. PROVIDE AND INSTALL A JOHNSON CONTROL PANEL AS SHOWN. SEE DWG H007 FOR DETAILS
5. TO JOHNSON CONTROL PANEL (MASTER) LOCATION IN TREATMENT BUILDING SEE DWG E011 & E319 FOR CONTINUATION.
6. TEMPERATURE SENSORS & ACOUSTICAL INTAKE LOUVERS PRESSURE SENSOR. SEE DWG H007 FOR DETAILS.
7. 1" CONDUIT ONLY FROM JOHNSON CONTROL PANEL TO ACOUSTICAL INTAKE LOUVERS PRESSURE SENSOR. SEE DWG H006 & H007 FOR NUMBER OF WIRING REQUIRED FOR HVAC EQUIPMENT.
8. ALL HVAC EQUIPMENT CONDUIT ROUTING SHOWN ARE DIAGRAMMATIC AND FOR REFERENCE ONLY. CONTRACTOR TO PROVIDE AND INSTALL A WORKABLE HVAC SYSTEM AS SHOWN. ALL JUNCTION BOX SHALL BE INSTALLED BASED ON FILED CONDITIONS. FIELD RELOCATED IF REQUIRED.
9. 1"C - 3#10, 1#10G
10. 1"C - 6#10, 1#10G
11. 1"C - 9#10, 1#10G
12. 1"C - 2#10, 1#10G

FILENAME: 6232-E212.dwg

LAST UPDATED: 01/18/2012 10:54 AM

LAST SAVED BY: ypsee

No.	DATE	REVISIONS	APPROVED

DESIGNED: YPS
DRAWN: YPS
CHECKED: RVT

RBF CONSULTING

carollo

IRVINE RANCH WATER DISTRICT

RHONDA V. TIEJERINA REE NO. 15473 ELECTRICAL ENGINEER DATE
CINDY MILLER RCE NO. 58116 PROJECT MANAGER DATE
PATRICIA UEMATSU RCE NO. 36762 PRINCIPAL ENGINEER DATE

IRVINE RANCH WATER DISTRICT
BAKER WATER TREATMENT PLANT
PROJECT NO. 11218

FEED WATER PUMP STATION
HVAC PLAN

DRAWING E212

CONDUIT SCHEDULE

PLAN SYMBOL #	CONDUIT QTY	CONDUIT SIZE	CONDUCTOR QTY.& SIZE	INSULATION RATING	LOCATION FROM	LOCATION TO	LOCATION DWG. NOS	REMARKS
2001P	1	1"	2#8, 1#8G	600V	PL-200	GEN-100 AUX PANEL	E205,E208	
2002P	1	1"	2#10, 1#10G		CP-200A	CP-200B	E206,E208	
2003A	1	2"	DATA LINK		CP-200A	CP-200B	E206,E208	
2004C	1	1"	8#14, 2#14 SPARE		GEN-100 CONTROL PANEL	CP-200A	E208	
2005A	1	1"	CONDUIT ONLY		GEN-100 CONTROL PANEL	CP-200A	E208	
2006A	1	2"	DATA LINK		GEN-100 CONTROL PANEL	CP-200A	E208	
2007A	2	2"	DATA LINK		CP-200A	RIO-200A	E208	
2008P	1	1"	2#10, 1#10G		PL-200	CP-200A	E208	
2009C	1	1"	2#14, 2#14 SPARE		CP-200A	HIRSCH CONTROL PANEL	E208	
2010P	2	2"	3#250MCM, 1#1G		MCC-200	VFD-0310	E201,E208	
2011P	2	2"	3#250MCM, 1#1G		VFD-0310	P-0310	E201,E206,E208	
2012A	1	2"	8(3/C#16) SHLD		VFD-0310	RTDs	E201,E206,E208	
2013C	1	1"	6#14		VFD-0310	LOS, PSHL-0310, SPACE HEATER	E201,E206,E208	
2014A	1	2"	2(DATA LINK)		VFD-0310	CP-200A	E201,E208	
2015A	1	1"	MSC		CP-200B	VE-0310	E206	VIBRATION MNTR
2016C	1	1"	14#14, 4#14 SPARE		VFD-0310	RIO-200A	E208	
2017A	1	1"	2(2/C#16) SHLD		VFD-0310	RIO-200A	E208	
2020P	2	2"	3#250MCM, 1#1G		MCC-200	VFD-0320	E201,E208	
2021P	2	2"	3#250MCM, 1#1G		VFD-0320	P-0320	E201,E206,E208	
2022A	1	2"	8(3/C#16) SHLD		VFD-0320	RTDs	E201,E206,E208	
2023C	1	1"	6#14		VFD-0320	LOS, PSHL-0320, SPACE HEATER	E201,E206,E208	
2024A	1	2"	2(DATA LINK)		VFD-0320	CP-200A	E201,E208	
2025A	1	1"	MSC		CP-200B	VE-0320	E206	VIBRATION MNTR
2026C	1	1"	14#14, 4#14 SPARE		VFD-0320	RIO-200A	E208	
2027A	1	1"	2(2/C#16) SHLD		VFD-0320	RIO-200A	E208	
2030P	2	2"	3#250MCM, 1#1G		MCC-200	VFD-0330	E201,E208	
2031P	2	2"	3#250MCM, 1#1G		VFD-0330	P-0330	E201,E206,E208	
2032A	1	2"	8(3/C#16) SHLD		VFD-0330	RTDs	E201,E206,E208	
2033C	1	1"	6#14		VFD-0330	LOS, PSHL-0330, SPACE HEATER	E201,E206,E208	
2034A	1	2"	2(DATA LINK)		VFD-0330	CP-200A	E201,E208	
2035A	1	1"	MSC		CP-200B	VE-0330	E206	VIBRATION MNTR
2036C	1	1"	14#14, 4#14 SPARE		VFD-0330	RIO-200A	E208	
2037A	1	1"	2(2/C#16) SHLD		VFD-0330	RIO-200A	E208	
2040P	2	2"	3#250MCM, 1#1G		MCC-200	VFD-0340	E201,E208	
2041P	2	2"	3#250MCM, 1#1G		VFD-0340	P-0340	E201,E206,E208	
2042A	1	2"	8(3/C#16) SHLD		VFD-0340	RTDs	E201,E206,E208	
2043C	1	1"	6#14		VFD-0340	LOS, PSHL-0340, SPACE HEATER	E201,E206,E208	
2044A	1	2"	2(DATA LINK)		VFD-0340	CP-200A	E201,E208	
2045A	1	1"	MSC		CP-200B	VE-0340	E206	VIBRATION MNTR
2046C	1	1"	14#14, 4#14 SPARE		VFD-0340	RIO-200A	E208	
2047A	1	1"	2(2/C#16) SHLD		VFD-0340	RIO-200A	E208	

CONDUIT SCHEDULE

PLAN SYMBOL #	CONDUIT QTY	CONDUIT SIZE	CONDUCTOR QTY.& SIZE	INSULATION RATING	LOCATION FROM	LOCATION TO	LOCATION DWG. NOS	REMARKS
2050P	2	2"	3#250MCM, 1#1G		MCC-200	VFD-0350	E201,E208	
2051P	2	2"	3#250MCM, 1#1G		VFD-0350	P-0350	E201,E206,E208	
2052A	1	2"	8(3/C#16) SHLD		VFD-0350	RTDs	E201,E206,E208	
2053C	1	1"	6#14		VFD-0350	LOS, PSHL-0350, SPACE HEATER	E201,E206,E208	
2054A	1	2"	2(DATA LINK)		VFD-0350	CP-200A	E201,E208	
2055A	1	1"	MSC		CP-200B	VE-0350	E206	VIBRATION MNTR
2056C	1	1"	14#14, 4#14 SPARE		VFD-0350	RIO-200A	E208	
2057A	1	1"	2(2/C#16) SHLD		VFD-0350	RIO-200A	E208	
2060P	2	2"	3#250MCM, 1#1G		MCC-200	VFD-0360	E201,E208	
2061P	2	2"	3#250MCM, 1#1G		VFD-0360	P-0360	E201,E206,E208	
2062A	1	2"	8(3/C#16) SHLD		VFD-0360	RTDs	E201,E206,E208	
2063C	1	1"	6#14		VFD-0360	LOS, PSHL-0360, SPACE HEATER	E201,E206,E208	
2064A	1	2"	2(DATA LINK)		VFD-0360	CP-200A	E201,E208	
2065A	1	1"	MSC		CP-200B	VE-0360	E206	VIBRATION MNTR
2066C	1	1"	14#14, 4#14 SPARE		VFD-0360	RIO-200A	E208	
2067A	1	1"	2(2/C#16) SHLD		VFD-0360	RIO-200A	E208	
2070P	1	1"	3#8, 1#8G		P-0460	JBOX AT STR-0410	E201,E206	
2071C	1	1"	4#14		P-0460	JBOX AT STR-0410	E201,E206	TSH, SPACE HTR
2072P	1	1"	6#10, 3#8, 1#8G		JBOX AT STR-0410	JBOX AT STR-0420	E201,E206	
2073C	1	1"	16#14, 2#14 SPARE		JBOX AT STR-0410	JBOX AT STR-0420	E201,E206	
2074P	1	1"	12#10, 3#8, 1#8G		JBOX AT STR-0420	JBOX AT STR-0430	E201,E206	
2075C	1	2"	28#14, 4#14 SPARE		JBOX AT STR-0420	JBOX AT STR-0430	E201,E206	
2076P	1	2"	18#10, 3#8, 1#8G		JBOX AT STR-0430	EMBEDDED POWER PULL BOX	E201,E206,E208	
2077C	1	2"	40#14, 6#14 SPARE		JBOX AT STR-0430	EMBEDDED CONTROL PULL BOX	E201,E206,E208	
2078A	1	1"	(2/C#16) SHLD		PDIT-0410	JBOX AT PDIT-0420	E206	
2079A	1	1"	2(2/C#16) SHLD		JBOX AT PDIT-0420	JBOX AT PDIT-0430	E206	
2080A	1	1"	3(2/C#16) SHLD		JBOX AT PDIT-0430	RIO-200A	E206,E208	
2081C	1	1"	2#14		ZSO-0380	RIO-200A	E206,E208	
2082P	1	1"	6#10, 1#10G		O2-CAW-MOV-0384, MOV-0385	MCC-200	E206,E208	
2083C	1	1"	24#14, 4#14 SPARE		O2-CAW-MOV-0384, MOV-0385	CP-200A	E206,E208	
2084P	1	1"	2#10, 1#10G		FIT-0381	JBOX AT FIT-0370	E206	
2085A	1	1"	(2/C#16) SHLD		FIT-0381	JBOX AT FIT-0370	E206	
2086P	1	1"	2#10, 1#10G		AIT-0462	JBOX AT FIT-0370	E206	
2087A	1	1"	(2/C#16) SHLD		AIT-0462	JBOX AT FIT-0370	E206	
2088P	1	1"	6#10, 1#10G		JBOX AT FIT-0370	EMBEDDED CONTROL PULL BOX	E206,E208	FIT-0381,AIT-0462 FIT-0370
2089A	1	1"	4(2/C#16) SHLD		JBOX AT FIT-0370	EMBEDDED CONTROL PULL BOX	E206,E208	FIT-0381,AIT-0462 FIT-0370,PIT-0371
2090C	1	1"	4#14		PSH-0460, FSL-0460	EMBEDDED CONTROL PULL BOX	E206,E208	
2091C	1	1"	16#14		LE-0302, LE-0307	EMBEDDED CONTROL PULL BOX	E206,E208	
2092P	1	1"	18#10, 3#8, 1#8G		EMBEDDED POWER PULL BOX	MCC-200	E208	2076P
2093C	1	1"	4#14		EMBEDDED CONTROL PULL BOX	RIO-200A	E208	LSLL-0302,-0307
2094C	1	1"	36#14, 6#14 SPARE		EMBEDDED CONTROL PULL BOX	RIO-200A	E208	STRs & MOVs
2095P	1	1"	4#10, 1#10G		EMBEDDED CONTROL PULL BOX	CP-200A	E208	FIT-0381,AIT-0462
2096A	1	1"	2(2/C#16) SHLD		EMBEDDED CONTROL PULL BOX	CP-200A	E208	FIT-0381,AIT-0462
2097C	1	1"	4#14		EMBEDDED CONTROL PULL BOX	CP-200A	E208	2090C
2098P	1	1"	2#10, 1#10G		PL-200	UPS-200A	E208	

CONDUIT NUMBERING SCHEME	CONDUIT ABBREVIATIONS
AREA NUMBER — 2 001 P — CONDUIT ABBREVIATION; CONDUIT NUMBER	P = POWER C = CONTROL A = SIGNAL F = FIBER OPTIC

EQUIPMENT TAG NUMBERS ON THIS DRAWING ARE PRECEDED W/ **02-MFW-** UNLESS OTHERWISE LABELED

No.	DATE	REVISIONS	APPROVED

DESIGNED: YPS
DRAWN: YPS
CHECKED: RVT

RBF CONSULTING

carollo

IRVINE RANCH WATER DISTRICT

RHONDA V. TIEJERINA REE NO. 15473 ELECTRICAL ENGINEER DATE
CINDY MILLER RCE NO. 58116 PROJECT MANAGER DATE
PATRICIA UEMATSU RCE NO. 36762 PRINCIPAL ENGINEER DATE

IRVINE RANCH WATER DISTRICT
BAKER WATER TREATMENT PLANT
PROJECT NO. 11218

FEED WATER PUMP STATION CONDUIT, CABLE & PANELBOARD SCHEDULES I

DRAWING **E213**
SHEET **469** OF **632**

FILENAME: 6232-E213.dwg
LAST UPDATED: 01/13/2012 03:19 PM
LAST SAVED BY: ypsee

CONDUIT SCHEDULE

PLAN SYMBOL #	CONDUIT QTY	CONDUIT SIZE	CONDUCTOR QTY.& SIZE	INSULATION RATING	LOCATION FROM	LOCATION TO	DWG. NOS	REMARKS
2099P	1	1"	4#14, 6#14 SPARE	600V	UPS-200A	CP-200A	E208	ALARM
2100P	1	1"	2#10, 1#10G		UPS-200A	CP-200A	E208	
2101P	1	1"	2#10, 1#10G		UPS-200A	RIO-200A	E208	
2102C	1	1"	4#14		EMBEDDED CONTROL PULL BOX	MCC-200 (P-0460)	E208	TSH, SPACE HTR
2103P	1	1"	2#10, 1#10G		EMBEDDED CONTROL PULL BOX	RIO-200A	E208	FIT-0370
2104A	1	1"	2(2/C#16) SHLD		EMBEDDED CONTROL PULL BOX	RIO-200A	E208	FIT-0370,PIT-0371
2105P	1	1"	2#10, 1#10G		PL-200	LP-200	E208	
2106P	1	1"	2#10, 1#10G		PL-200	HIRSCH CONTROL PANEL	E208	
2107P	1	1"	2#10, 1#10G		PL-200	JOHNSON CONTROL PANEL	E208	
2108A	1	1"	CONDUIT ONLY		CP-200A	JOHNSON CONTROL PANEL	E208	
2109P	1	2"	CONDUIT ONLY		ELECTRICAL ROOM	PB-1(P)	E205,E206,E209	VIA PB-2(P),-1(P)
2110C	1	2"	CONDUIT ONLY		CP-200A	PB-1(C)	E209	VIA PB-2(C),-1(C)
2111C	1	1"	12#14		EMBEDDED CONTROL PULL BOX	CP-200A	E208	LSHH,LSH,LSL-0302 LSHH,LSH,LSL-0307
2112C	1	1"	2#14, 2#14 SPARE		MCC-200 (POWER MONITOR)	CP-200A	E201, E208	
2113A	1	2"	DATA LINK		MCC-200 (POWER MONITOR)	CP-200A	E201, E208	
2114C	1	2"	34#14, 8#14 SPARE		MCC-200 (STRs & P-0460)	RIO-200A	E208	
2120P	1	1"	3#10, 1#10G		O6-SL-MOV-1051	PB1-P	E209	
2121C	1	1"	10#14		O6-SL-MOV-1051	PB1-C	E209	
2122P	1	1"	3#10, 1#10G		O6-SL-MOV-1052	PB1-P	E209	
2123C	1	1"	10#14		O6-SL-MOV-1052	PB1-C	E209	
2124P	1	1"	6#10, 1#10G		PB1-P	MCC-200	E205,E208,E209	VIA PB2,3,4-P
2125C	1	1"	20#14		PB1-C	CP-200A	E205,E208,E209	VIA PB2,3,4-C
2126P	1	1"	3#10, 1#10G		CLR-1010	VCP-1010	E209	
2127P	1	1"	3#10, 1#10G		CLR-1020	VCP-1010	E209	
2128P	1	1"	3#10, 1#10G		VCP-1010	PB1-P	E209	
2129P	1	1"	3#10, 1#10G		VCP-1030	PB1-P	E209	
2130P	1	1"	6#10, 1#10G		PB1-P (VCP-1010, VCP-1030)	MCC-200	E205,E208,E209	VIA PB2,3,4-P
2131C	1	1"	24#14, 4#14 SPARE		VCP-1010	PB1-C	E209	
2132C	1	1"	24#14, 4#14 SPARE		VCP-1030	PB1-C	E209	
2133C	1	2"	48#14, 8#14 SPARE		PB1-C (VCP-1010, VCP-1030)	CP-200A	E205,E208,E209	VIA PB2,3,4-C
2134P	1	1"	2#10, 1#10G		O6-SL-FIT-1055	CP-200A	E205,E208,E209	VIA PB2,3,4-C
2135A	1	1"	(2/C#16) SHLD		O6-SL-FIT-1055	CP-200A	E205,E208,E209	VIA PB2,3,4-C
2136C	1	1"	2#14		LSH-1050	JUNCTION BOX	E205,E209	
2137C	1	1"	4#14		JUNCTION BOX	CP-200A	E205,E208,E209	LSH-1050,LSH-1060
2138P	1	1"	3#10, 1#10G		MXR-0980	JBOX AT MXR-0960	E209	
2139P	1	1"	6#10, 1#10G		JBOX AT MXR-0960	PB-2(P)	E209	
2140P	1	1"	3#10, 1#10G		JBOX AT MXR-0940	JBOX AT MXR-0920	E209	
2141P	1	1"	6#10, 1#10G		JBOX AT MXR-0920	PB2-P	E209	
2142P	1	1"	3#10, 1#10G		MXR-0970	JBOX AT MXR-0950	E209	
2143P	1	1"	6#10, 1#10G		JBOX AT MXR-0950	PB-2(P)	E209	
2144P	1	1"	3#10, 1#10G		MXR-0930	JBOX AT MXR-0910	E209	
2145P	1	1"	6#10, 1#10G		JBOX AT MXR-0910	PB2-P	E209	
2146P	1	1"	12#10, 1#10G		PB2-P	PB4-P	E205,E208,E209	2139P, 2141P
2147P	1	1"	12#10, 1#10G		PB2-P	PB4-P	E205,E208,E209	2143P, 2145P
2148P	1	1"	6#10, 1#10G		PB4-P	MCC-200	E205,E208	MXR-0910,-0920
2149P	1	1"	6#10, 1#10G		PB4-P	MCC-200	E205,E208	MXR-0930,-0940
2150P	1	1"	6#10, 1#10G		PB4-P	MCC-200	E205,E208	MXR-0950,-0960
2151P	1	1"	6#10, 1#10G		PB4-P	MCC-200	E205,E208	MXR-0970,-0980

CONDUIT SCHEDULE

PLAN SYMBOL #	CONDUIT QTY	CONDUIT SIZE	CONDUCTOR QTY.& SIZE	INSULATION RATING	LOCATION FROM	LOCATION TO	DWG. NOS	REMARKS
2152C	1	1"	16#14, 4#14 SPARE	600V	VFD-0910, VFD-0920	CP-200A	E208	
2153A	1	1"	4(2/C#16) SHLD		VFD-0910, VFD-0920	CP-200A	E208	
2154A	1	2"	2(DATA LINK)		VFD-0910, VFD-0920	CP-200A	E208	
2155C	1	1"	16#14, 4#14 SPARE		VFD-0930, VFD-0940	CP-200A	E208	
2156A	1	1"	4(2/C#16) SHLD		VFD-0930, VFD-0940	CP-200A	E208	
2157A	1	2"	2(DATA LINK)		VFD-0930, VFD-0940	CP-200A	E208	
2158C	1	1"	16#14, 4#14 SPARE		VFD-0950, VFD-0960	CP-200A	E208	
2159A	1	1"	4(2/C#16) SHLD		VFD-0950, VFD-0960	CP-200A	E208	
2160A	1	2"	2(DATA LINK)		VFD-0950, VFD-0960	CP-200A	E208	
2161C	1	1"	16#14, 4#14 SPARE		VFD-0970, VFD-0980	CP-200A	E208	
2162A	1	1"	4(2/C#16) SHLD		VFD-0970, VFD-0980	CP-200A	E208	
2163A	1	2"	2(DATA LINK)		VFD-0970, VFD-0980	CP-200A	E208	
2164A	1	1"	(2/C#16) SHLD		LIT-0301	JUNCTION BOX	E205,E209	
2165A	1	1"	2(2/C#16) SHLD		JUNCTION BOX	RIO-200A	E208	LIT-0301, -0306
2166P	1	1"	3#10, 1#10G		MOV-0280	MCC-200	E205,E206,E208	
2167C	1	1"	12#14, 4#14 SPARE		MOV-0280	CP-200A	E205,E206,E208	
2168P	1	1"	3#10, 1#10G		MOV-0290	MCC-200	E205,E206,E208	
2169C	1	1"	12#14, 4#14 SPARE		MOV-0290	CP-200A	E205,E206,E208	
2170P	1	1"	3#3, 1#3G		MCC-200	O2-HVAC-EVP-2201	E201, E212	
2171P	1	1"	3#10, 1#10G		MCC-200	O2-HVAC-CND-2201	E201, E212	
2172P	1	1"	12#10, 1#10G		MCC-200	O2-HVAC-EF-2203,-2204,-2205,-2206	E201, E212	
2174P	1	1"	2#10, 1#10G		LIT-0301	JUNCTION BOX	E205,E209	
2175P	1	1"	4#10, 1#10G		JUNCTION BOX	RIO-200A	E205,E206,E209	LIT-0301, -0306
2176C	1	1"	MSC		MOV-0280 REMOTE PANEL	MOV-0280	E205,E206	
2177C	1	1"	MSC		MOV-0290 REMOTE PANEL	MOV-0290	E205,E206	
2178P	1	1"	3#10, 1#10G		CLR-1030	VCP-1030	E209	
2179P	1	1"	3#10, 1#10G		CLR-1040	VCP-1030	E209	
2180P	1	1"	4#10, 1#10G		VCP-0014 & VCP-0017	PL-200	E205,E208,E209	
2181C	1	1"	8#14		VCP-0014 & VCP-0017	CP-200A	E205,E208,E209	
2182P	1	1"	4#10, 1#10G		PL-200	O2-HVAC-EF-2201, -2202	E212	VIA JB
2183C	1	1"	4#14, 6#14 SPARE		UPS-200A	RIO-200A	E208	ALARM

VOLTS 120/208V PANEL PL-200 MAIN BREAKER 100A

PHASE 3 LOCATION IN MCC-200 BUS RATING 100A

WIRE 4 MOUNTING: IN MCC

DESCRIPTION	LTS.	REC.	MISC.	VOLT-AMPS øA	VOLT-AMPS øB	VOLT-AMPS øC	BRKR. AMP	BRKR. P	CIR.	BUS A B C	CIR	BRKR. P	BRKR. AMP	VOLT-AMPS øA	VOLT-AMPS øB	VOLT-AMPS øC	LTS.	REC.	MISC.	DESCRIPTION
ELEC ROOM LIGHTING	X			310			20	1	1		2	1	20	540				X		ELEC ROOM RECEPTACLE
PUMP ROOM LIGHTING	X				744		20	1	3		4	1	20		900			X		PUMP ROOM RECEPTACLE
PUMP ROOM LIGHTING	X					744	20	1	5		6	1	20			1000			X	UPS-200A
EXTERIOR LIGHTING (LP-200)	X			350			20	1	7		8	3	60	2500					X	GENERATOR AUX. PANEL
EXIT LIGHT	X				60		20	1	9		10		60		2500				X	
06-D-VCP-0014, 06-D-VCP-0017	X					1000	20	1	11		12	P	60			2500			X	
SPARE							20	1	13		14	1	40	500						O2-HVAC-EF-2201, 2202
SPARE							20	1	15		16	1	20							CP-200A
SPARE							20	1	17		18	1	20							JOHNSON CONTROL PANEL
SPARE							20	1	19		20	1	20							HIRSCH CONTROL PANEL
SPARE							20	1	21		22	1	20							SPACE
SPARE							20	1	23		24	1	20							SPACE
SUBTOTAL				660	804	1744								3540	3400	3500				

LOAD øA 4200 øB 4204 øC 5244

LCL X .25 øA - øB - øC -

TOTAL øA 4200 øB 4204 øC 5244

PANEL TOTAL 13648 VOLT-AMPS. = 37.88 AMPS

HIGH LEG 5244 VOLT-AMPS. = 43.7 AMPS

CONDUIT NUMBERING SCHEME

AREA NUMBER — 2 001 P — CONDUIT ABBREVIATION; CONDUIT NUMBER

CONDUIT ABBREVIATIONS

P = POWER
C = CONTROL
A = SIGNAL
F = FIBER OPTIC

EQUIPMENT TAG NUMBERS ON THIS DRAWING ARE PRECEDED W/ **02-MFW-** UNLESS OTHERWISE LABELED

No.	DATE	REVISIONS	APPROVED

DESIGNED: YPS
DRAWN: YPS
CHECKED: RVT

RBF CONSULTING — carollo — IRVINE RANCH WATER DISTRICT

RHONDA V. TIEJERINA REE NO. 15473 ELECTRICAL ENGINEER DATE
CINDY MILLER RCE NO. 58116 PROJECT MANAGER DATE
PATRICIA UEMATSU RCE NO. 36762 PRINCIPAL ENGINEER DATE

IRVINE RANCH WATER DISTRICT
BAKER WATER TREATMENT PLANT
PROJECT NO. 11218

FEED WATER PUMP STATION CONDUIT, CABLE & PANELBOARD SCHEDULES II

DRAWING **E214**
SHEET **470** OF **632**

FILENAME: 6232-E214.dwg LAST UPDATED: 01/16/2012 04:11 PM LAST SAVED BY: ypsee

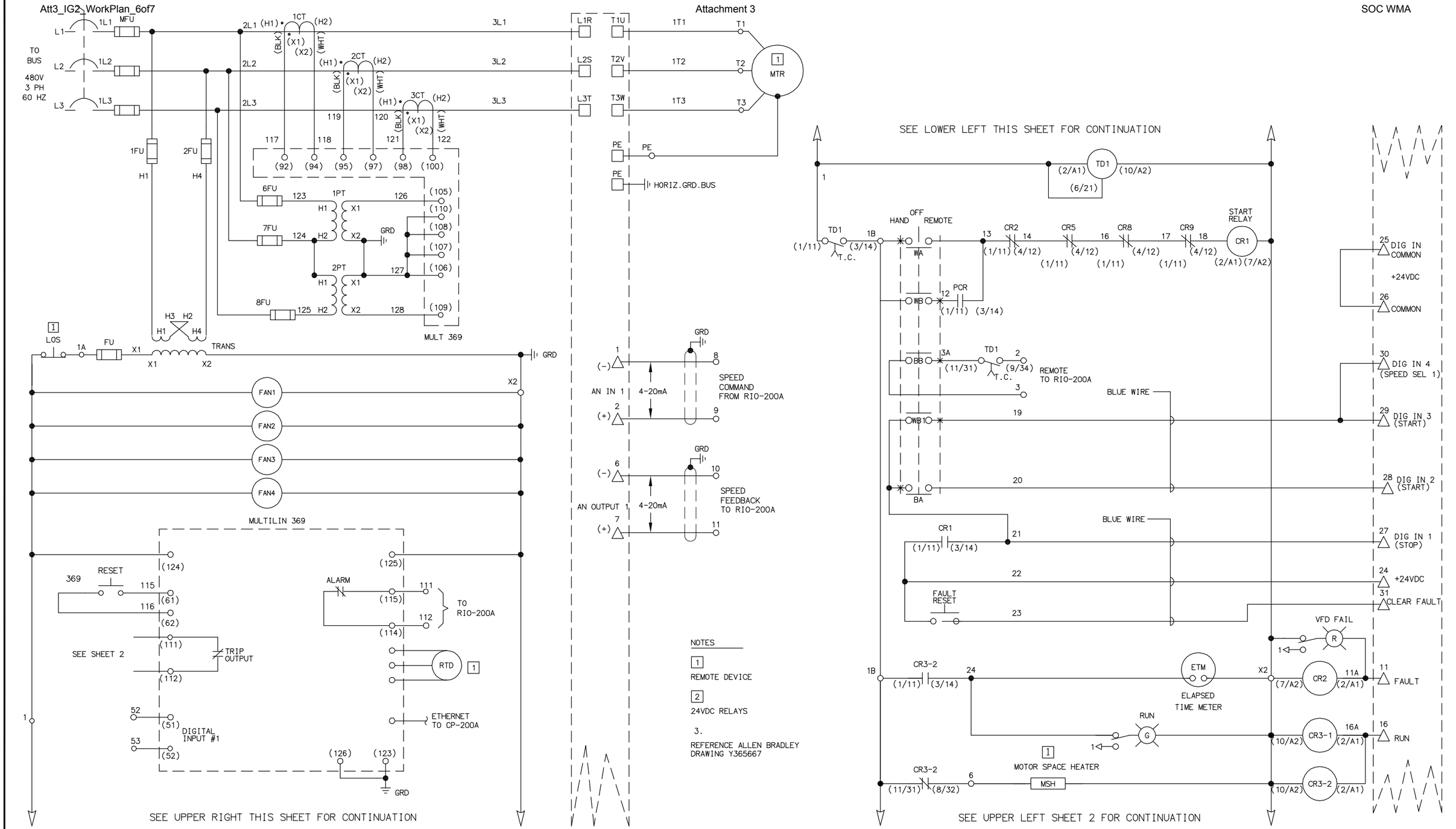

EQUIPMENT TAG NUMBERS ON THIS DRAWING ARE PRECEDED W/ **02-MFW-** UNLESS OTHERWISE LABELED

VFD PUMP CONTROL SCHEMATIC

(TYP. FOR P-0310, P-0320, P-0330, P-0340, P-0350, P-0360)

1 / –

No.	DATE	REVISIONS	APPROVED

DESIGNED: YPS
DRAWN: YPS
CHECKED: RVT

RBF CONSULTING
carollo
IRVINE RANCH WATER DISTRICT

RHONDA V. TIEJERINA REE NO. 15473 ELECTRICAL ENGINEER DATE
CINDY MILLER RCE NO. 58116 PROJECT MANAGER DATE
PATRICIA UEMATSU RCE NO. 36762 PRINCIPAL ENGINEER DATE

IRVINE RANCH WATER DISTRICT
BAKER WATER TREATMENT PLANT
PROJECT NO. 11218

FEED WATER PUMP STATION SCHEMATIC CONTROL DIAGRAM I (SHEET 1 OF 2)

DRAWING **E215**
SHEET **471** OF **632**

FILENAME: 6232-E215.dwg
LAST UPDATED: 01/17/2012 02:35 PM
LAST SAVED BY: ypsee

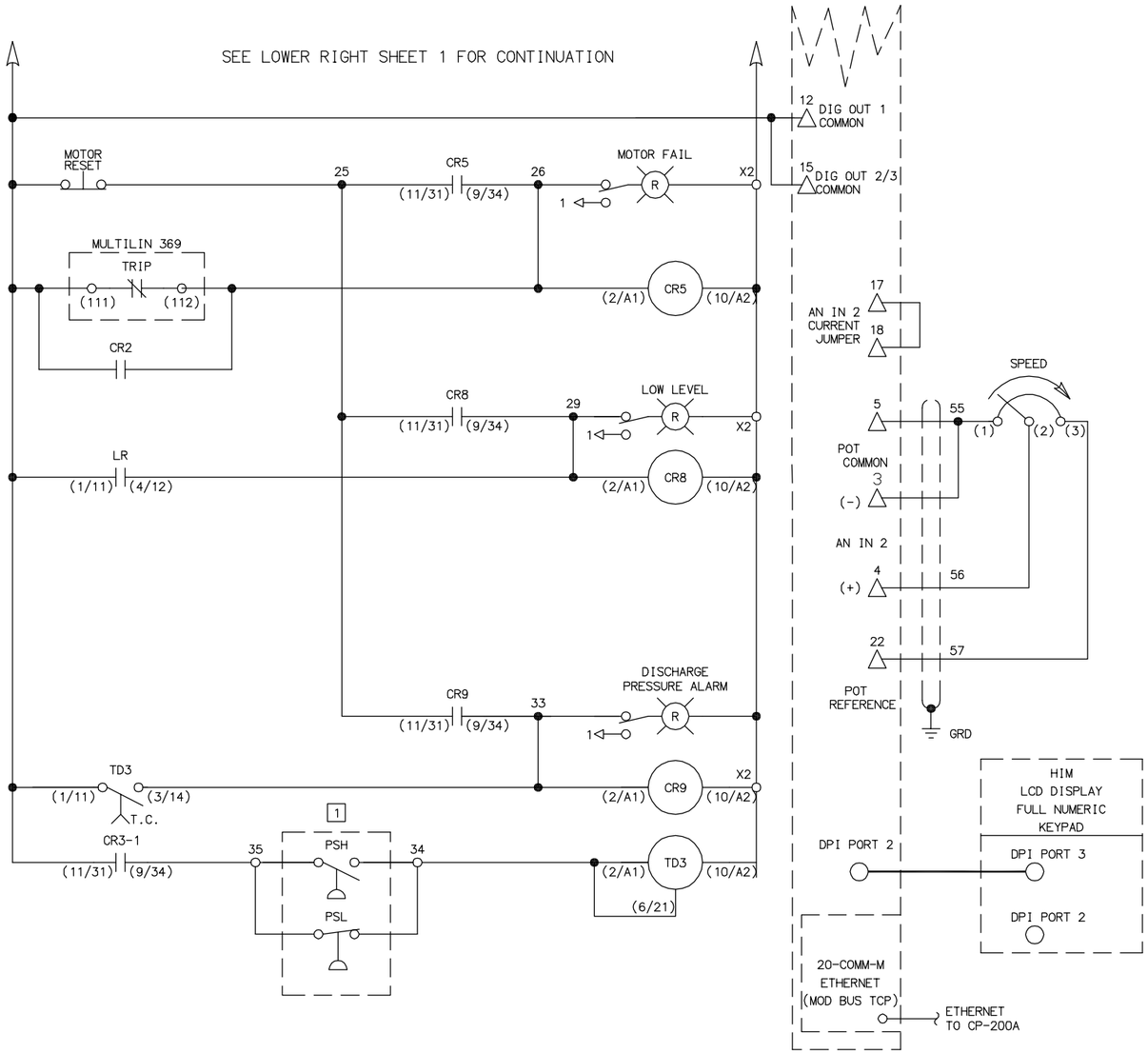

NOTES

1 REMOTE DEVICE

2 24VDC RELAYS

3. REFERENCE ALLEN BRADLEY DRAWING Y365667

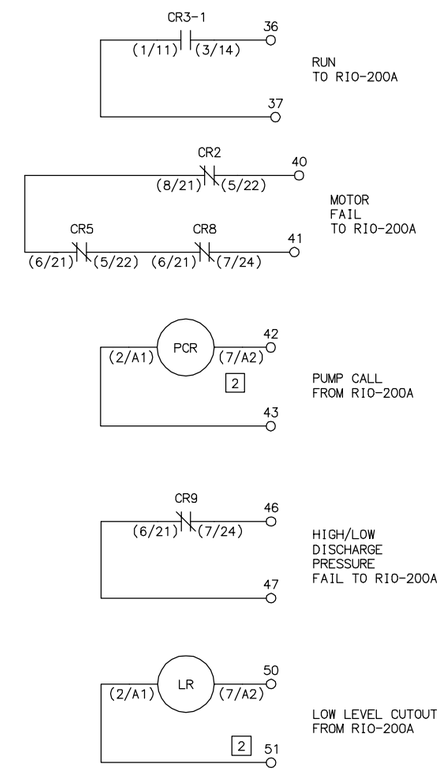

EQUIPMENT TAG NUMBERS ON THIS DRAWING ARE PRECEDED W/ **02-MFW-** UNLESS OTHERWISE LABELED

VFD PUMP CONTROL SCHEMATIC

(P-3010, P-3020, P-3030, P-3040, P-3050, P-3060)

1 / –

No.	DATE	REVISIONS	APPROVED

DESIGNED: YPS
DRAWN: YPS
CHECKED: RVT

RBF CONSULTING

carollo

IRVINE RANCH WATER DISTRICT

RHONDA V. TIEJERINA REE NO. 15473 ELECTRICAL ENGINEER DATE
CINDY MILLER RCE NO. 58116 PROJECT MANAGER DATE
PATRICIA UEMATSU RCE NO. 36762 PRINCIPAL ENGINEER DATE

IRVINE RANCH WATER DISTRICT
BAKER WATER TREATMENT PLANT
PROJECT NO. 11218

FEED WATER PUMP STATION SCHEMATIC CONTROL DIAGRAM I (SHEET 2 OF 2)

DRAWING **E216**

SHEET **472** OF **632**

FILENAME: 6232-E216.dwg LAST UPDATED: 01/17/2012 02:35 PM LAST SAVED BY: ypsee

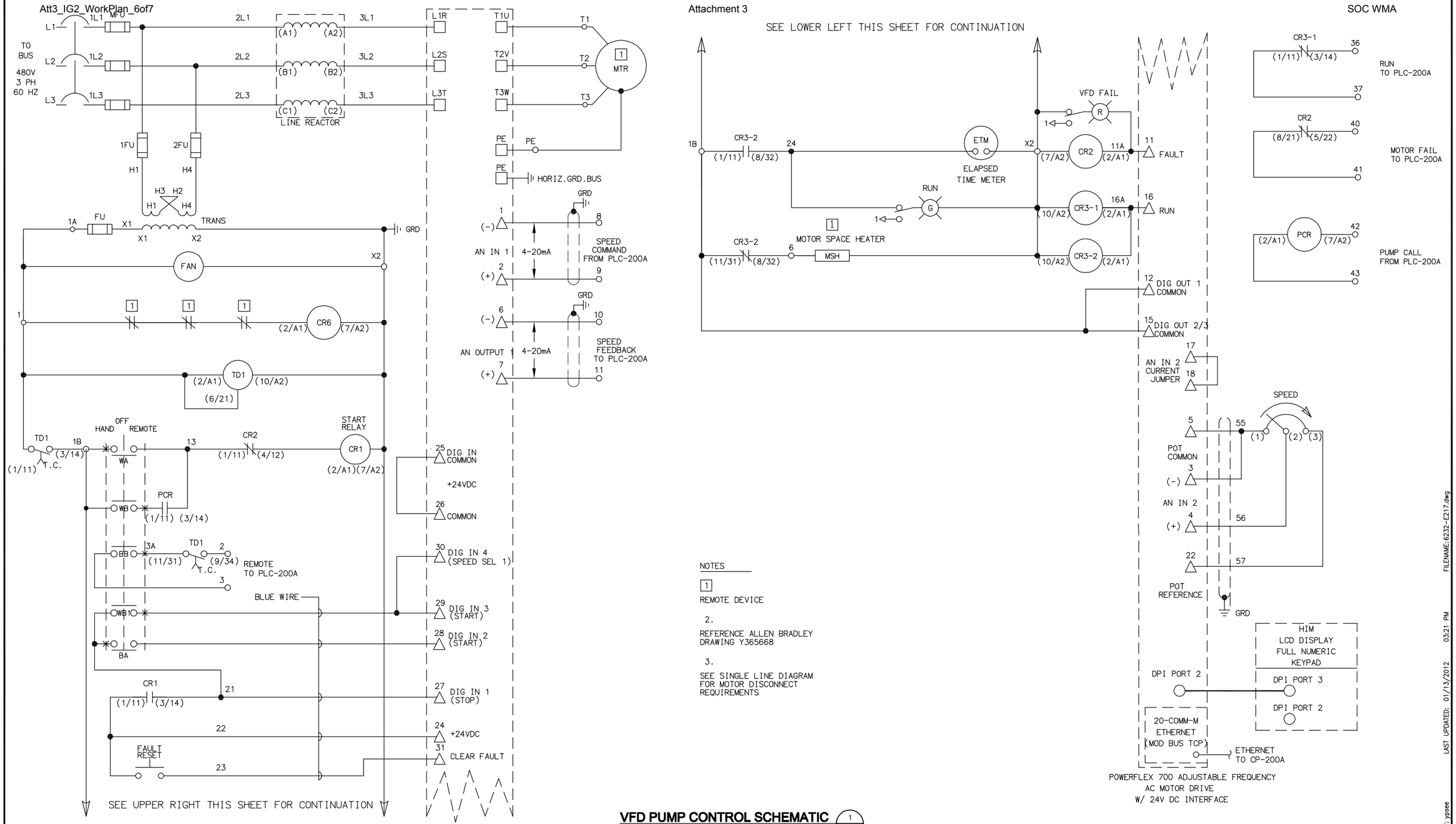

NOTES

1

REMOTE DEVICE

2.

REFERENCE ALLEN BRADLEY DRAWING Y365668

3.

SEE SINGLE LINE DIAGRAM FOR MOTOR DISCONNECT REQUIREMENTS

VFD PUMP CONTROL SCHEMATIC

(MXR-0910, MXR-0920, MXR-0930, MXR-0940)
(MXR-0950, MXR-0960, MXR-0970, MXR-0980)

1 / –

EQUIPMENT TAG NUMBERS BUTTON THIS DRAWING ARE PRECEDED W/ **06-MFWW-** UNLESS OTHERWISE LABELED

No.	DATE	REVISIONS	APPROVED

DESIGNED: YPS
DRAWN: YPS
CHECKED: RVT

RBF CONSULTING

carollo

IRVINE RANCH WATER DISTRICT

RHONDA V. TIEJERINA REE NO. 15473 ELECTRICAL ENGINEER DATE
CINDY MILLER RCE NO. 58116 PROJECT MANAGER DATE
PATRICIA UEMATSU RCE NO. 36762 PRINCIPAL ENGINEER DATE

IRVINE RANCH WATER DISTRICT
BAKER WATER TREATMENT PLANT
PROJECT NO. 11218

FEED WATER PUMP STATION SCHEMATIC CONTROL DIAGRAM II

DRAWING **E217**

SHEET **473** OF **632**

FILENAME: 6232-E217.dwg
LAST UPDATED: 01/13/2012 03:21 PM
LAST SAVED BY: ypsee

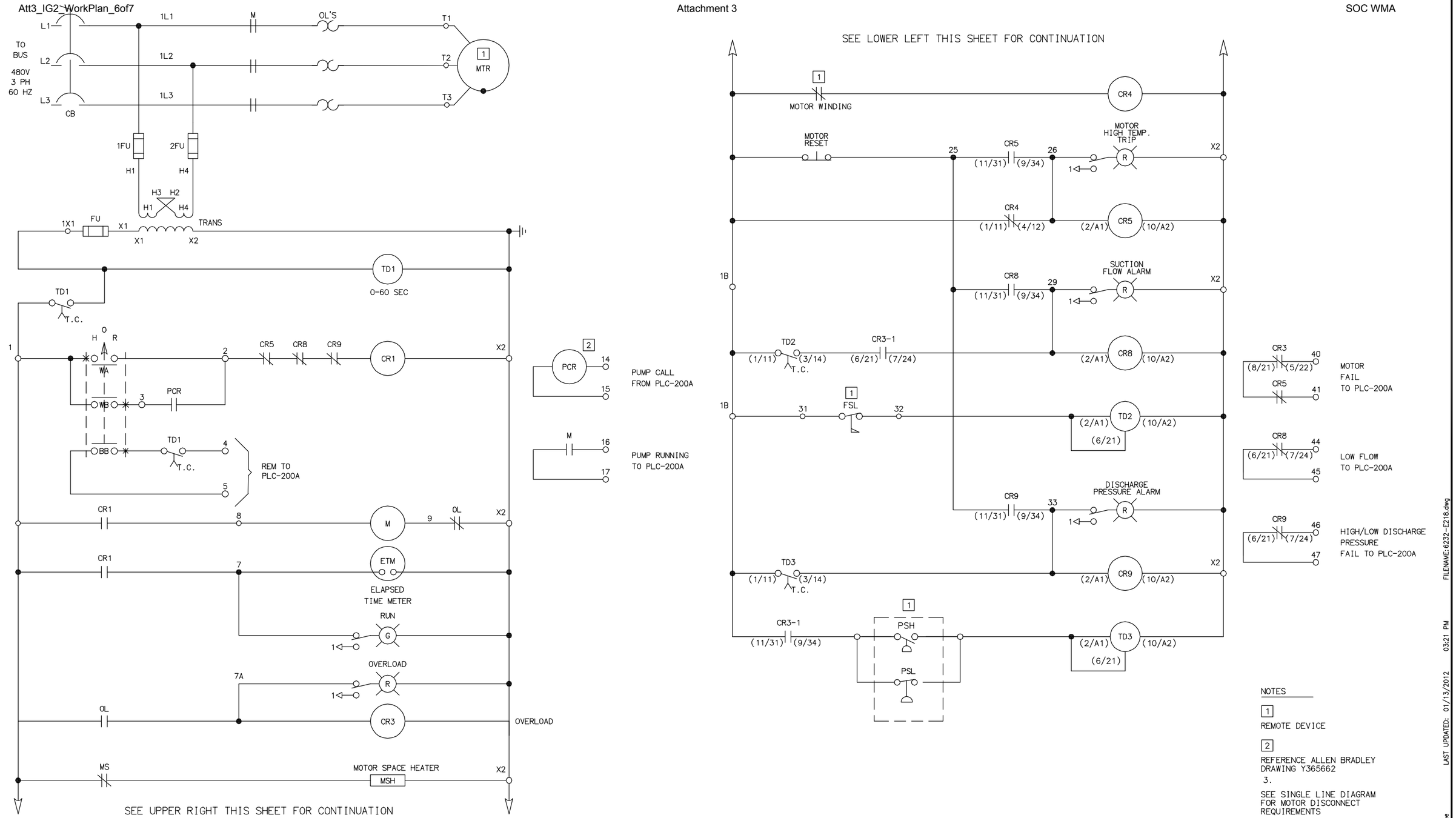

NOTES

1. REMOTE DEVICE
2. REFERENCE ALLEN BRADLEY DRAWING Y365662
3. SEE SINGLE LINE DIAGRAM FOR MOTOR DISCONNECT REQUIREMENTS

TYPICAL MOTOR STARTER CONTROL SCHEMATIC

(P-0460)

1 / –

EQUIPMENT TAG NUMBERS ON THIS DRAWING ARE PRECEDED W/ **02-MFW-** UNLESS OTHERWISE LABELED

No.	DATE	REVISIONS	APPROVED

DESIGNED: YPS
DRAWN: YPS
CHECKED: RVT

RBF CONSULTING
carollo
IRVINE RANCH WATER DISTRICT

RHONDA V. TIEJERINA REE NO. 15473 ELECTRICAL ENGINEER DATE
CINDY MILLER RCE NO. 58116 PROJECT MANAGER DATE
PATRICIA UEMATSU RCE NO. 36762 PRINCIPAL ENGINEER DATE

IRVINE RANCH WATER DISTRICT
BAKER WATER TREATMENT PLANT
PROJECT NO. 11218

FEED WATER PUMP STATION SCHEMATIC CONTROL DIAGRAM III

DRAWING **E218**
SHEET **474** OF **632**

LAST SAVED BY: ypsee LAST UPDATED: 01/13/2012 03:21 PM FILENAME: 6232-E218.dwg

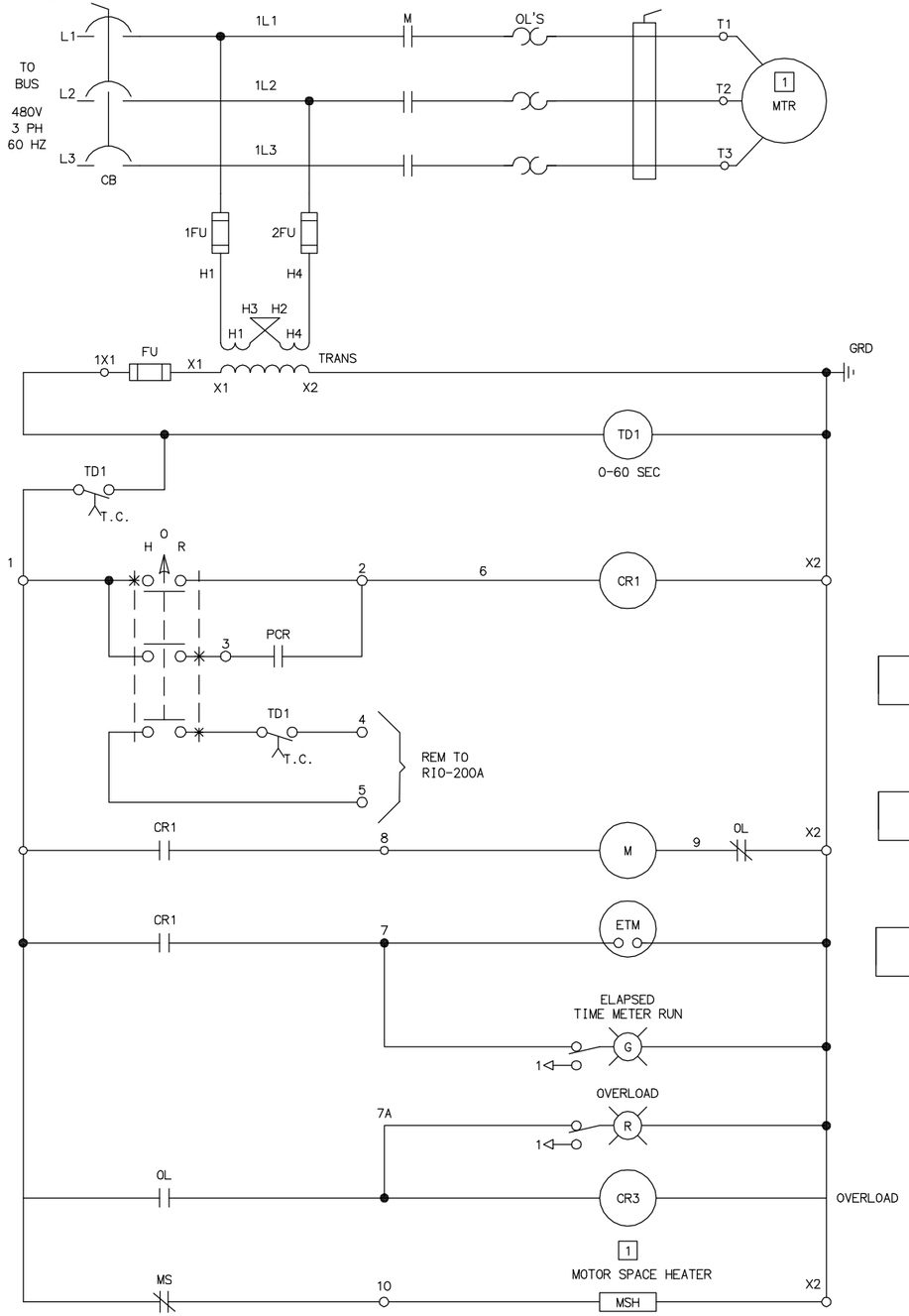

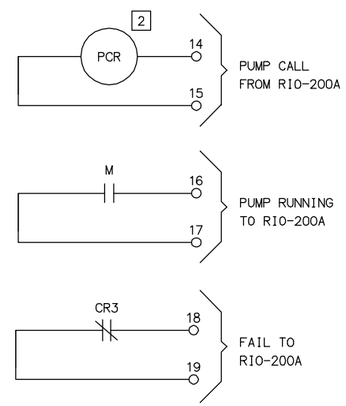

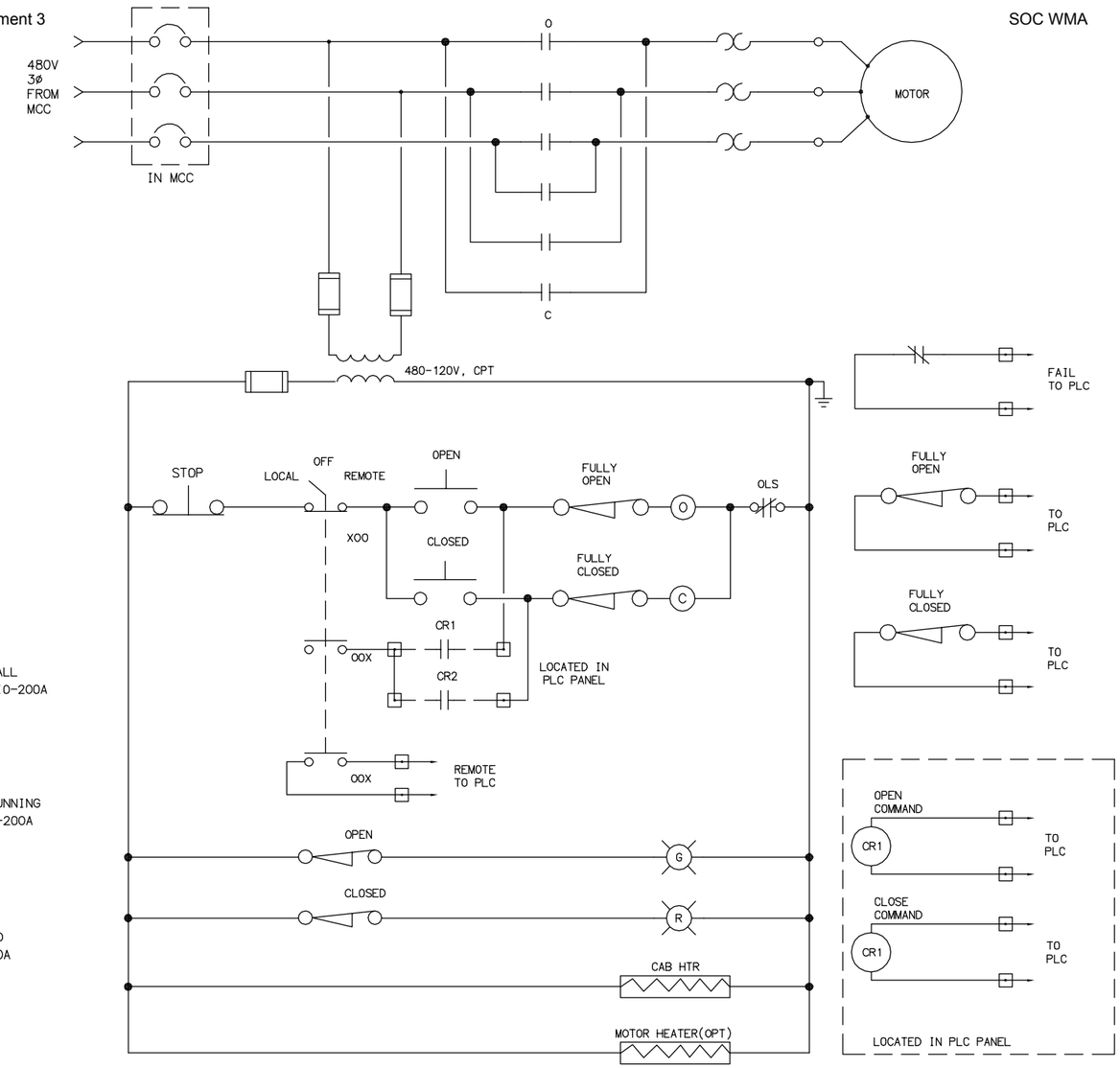

NOTES

1. REMOTE DEVICE

2. 24VDC RELAYS

3. REFERENCE ALLEN BRADLEY DRAWING Y365662

4. SEE SINGLE LINE DIAGRAM FOR MOTOR DISCONNECT REQUIREMENTS

TYPICAL MOTOR STARTER CONTROL SCHEMATIC (1)
(STR-0410, STR-0420, STR-0430)

OPEN/CLOSE MOTOR OPERATED VALVE SCHEMATIC (2)
(02-SWW-MOV-0410, 02-SWW-MOV-0420, 02-SWW-MOV-0430)*
(06-SL-MOV-1051, 06-SL-MOV-1052,02-CAW-MOV-0384, 02-CAW-MOV-0385)**
(MOV-0280, MOV-0290)**

* TO RIO-200A (CP-200C)
** TO PLC-200A (CP-200A)

02-CAW-MOV-0384
02-CAW-MOV-0385
02-MFW-MOV-0280
02-MFW-MOV-0290
REMOTE CONTROL STATION REQUIRED

EQUIPMENT TAG NUMBERS ON THIS DRAWING ARE PRECEDED W/ **02-MFW-** UNLESS OTHERWISE LABELED

No.	DATE	REVISIONS	APPROVED

DESIGNED: YPS
DRAWN: YPS
CHECKED: RVT

RBF CONSULTING

carollo

IRVINE RANCH WATER DISTRICT

RHONDA V. TIEJERINA REE NO. 15473 ELECTRICAL ENGINEER DATE
CINDY MILLER RCE NO. 58116 PROJECT MANAGER DATE
PATRICIA UEMATSU RCE NO. 36762 PRINCIPAL ENGINEER DATE

IRVINE RANCH WATER DISTRICT
BAKER WATER TREATMENT PLANT
PROJECT NO. 11218

FEED WATER PUMP STATION SCHEMATIC CONTROL DIAGRAM IV

DRAWING **E219**

SHEET **475** OF **632**

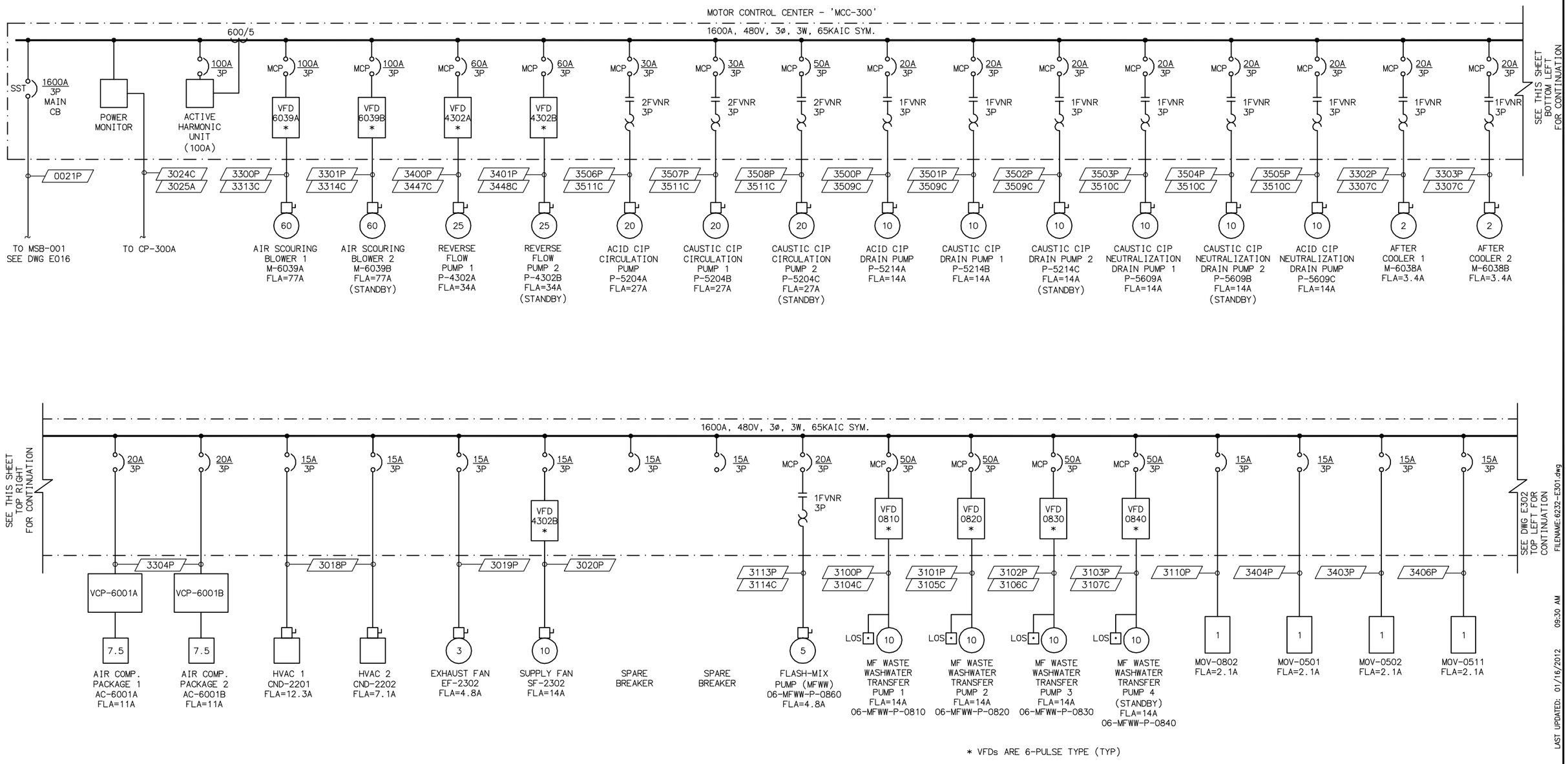

SINGLE LINE DIAGRAM

N.T.S.

EQUIPMENT TAG NUMBERS ON THIS DRAWING ARE PRECEDED W/ **03-FLW-** UNLESS OTHERWISE LABELED

No.	DATE	REVISIONS	APPROVED

DESIGNED: YPS
DRAWN: YPS
CHECKED: RVT

RBF CONSULTING

carollo

IRVINE RANCH WATER DISTRICT

RHONDA V. TIEJERINA REE NO. 15473 ELECTRICAL ENGINEER DATE
CINDY MILLER RCE NO. 58116 PROJECT MANAGER DATE
PATRICIA UEMATSU RCE NO. 36762 PRINCIPAL ENGINEER DATE

IRVINE RANCH WATER DISTRICT
BAKER WATER TREATMENT PLANT
PROJECT NO. 11218

TREATMENT BUILDING SINGLE LINE DIAGRAM I

DRAWING **E301**

SHEET **476** OF **632**

LAST SAVED BY: ypsee LAST UPDATED: 01/16/2012 09:30 AM FILENAME:6232-E301.dwg

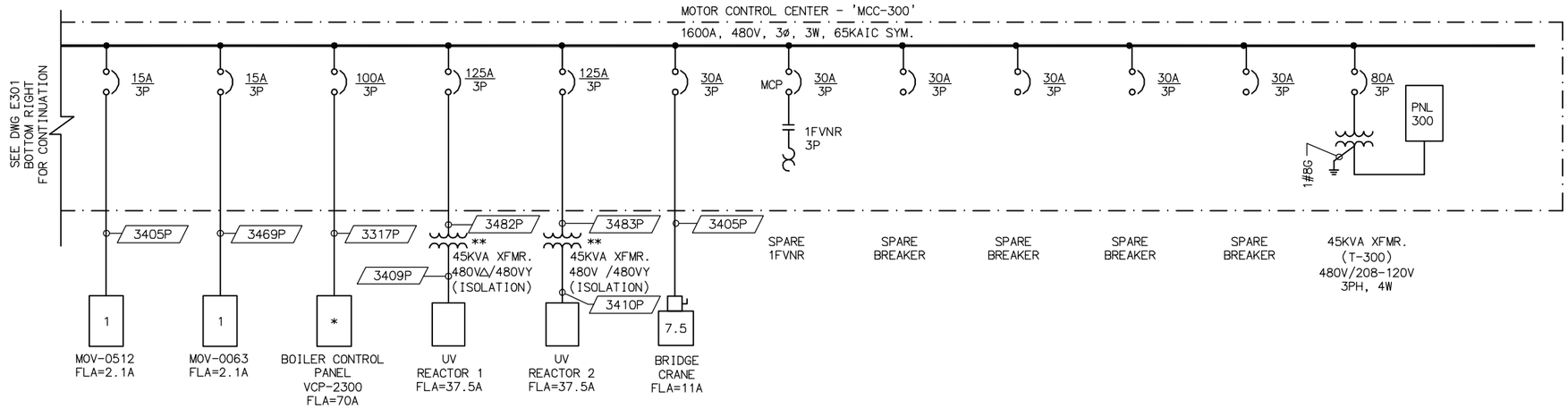

** ISOLATION TRANSFORMER PROVIDED BY UV SYSTEM SUPPLIER AND INSTALLED BY CONTRACTOR

* SEE DWG H-303 FOR DETAILS

SINGLE LINE DIAGRAM

N.T.S.

MCC-300

LOAD SCHEDULE

EQUIPMENT	HP	F.L. AMPS CONNECTED	F.L. AMPS RUNNING	F.L. AMPS GENERATOR
AIR SCOURING BLOWER 1	60	77	77	77
AIR SCOURING BLOWER 2	60	77	-	-
REVERSE FLOW PUMP 1	25	34	34	34
REVERSE FLOW PUMP 2	25	34	-	-
ACID CIP CIRCULATION PUMP	20	27	27	27
CAUSTIC CIP CIRC PUMP 1	20	27	27	27
CAUSTIC CIP CIRC PUMP 2	20	27	-	-
ACID CIP DRAIN PUMP	10	14	14	14
CAUSTIC CIP DRAIN PUMP 1	10	14	14	14
CAUSTIC CIP DRAIN PUMP 2	10	14	-	-
ACID CIP NEUT DRAIN PUMP	10	14	14	14
CAUSTIC NEUT DRAIN PUMP 1	10	14	14	14
CAUSTIC NEUT DRAIN PUMP 2	10	14	-	-
AFTER COOLER 1	2	3.4	3.4	3.4
AFTER COOLER 2	2	3.4	-	-
AIR COMPRESSOR PACKAGE 1	7.5	11	11	11
AIR COMPRESSOR PACKAGE 2	7.5	11	11	-
HVAC 1	-	12.3	12.3	-
HVAC 2	-	7.1	7.1	-
EF-2302	3	4.8	4.8	-
SF-2302	10	14	14	-
MFWW FLASH-MIX PUMP	5	7.6	7.6	-
MFWW TRANSFER PUMP 1	10	14	14	14
MFWW TRANSFER PUMP 2	10	14	14	14
MFWW TRANSFER PUMP 3	10	14	14	14
MFWW XFER PUMP 4 (STBY)	10	14	-	-
MOV-0802	1	2.1	2.1	2.1
MOV-0501	1	2.1	2.1	2.1
MOV-0502	1	2.1	2.1	2.1
MOV-0511	1	2.1	2.1	2.1
MOV-0512	1	2.1	2.1	2.1
MOV-0063	1	2.1	2.1	2.1
BOILER CONTROL PANEL	-	70	70	70
UV 1 (CP-300C)	-	57.5	57.5	-
UV 2 (CP-300D)	-	57.5	57.5	-
BRIDGE CRANE	7.5	10.6	10.6	-
45KVA XFMR	-	54	54	54
25% LARGEST LOAD		20	20	-
TOTAL LOADS		875.4	731	450.2

EQUIPMENT TAG NUMBERS ON THIS DRAWING ARE PRECEDED W/ **03-FLW-** UNLESS OTHERWISE LABELED

No.	DATE	REVISIONS	APPROVED

DESIGNED: YPS
DRAWN: YPS
CHECKED: RVT

RBF CONSULTING
carollo
IRVINE RANCH WATER DISTRICT

RHONDA V. TIEJERINA REE NO. 15473 ELECTRICAL ENGINEER DATE
CINDY MILLER RCE NO. 58116 PROJECT MANAGER DATE
PATRICIA UEMATSU RCE NO. 36762 PRINCIPAL ENGINEER DATE

IRVINE RANCH WATER DISTRICT
BAKER WATER TREATMENT PLANT
PROJECT NO. 11218

TREATMENT BUILDING SINGLE LINE DIAGRAM 2

DRAWING **E302**
SHEET **477** OF **632**

LAST SAVED BY: ypsee LAST UPDATED: 01/19/2012 02:25 PM FILENAME: 6232-E302.dwg

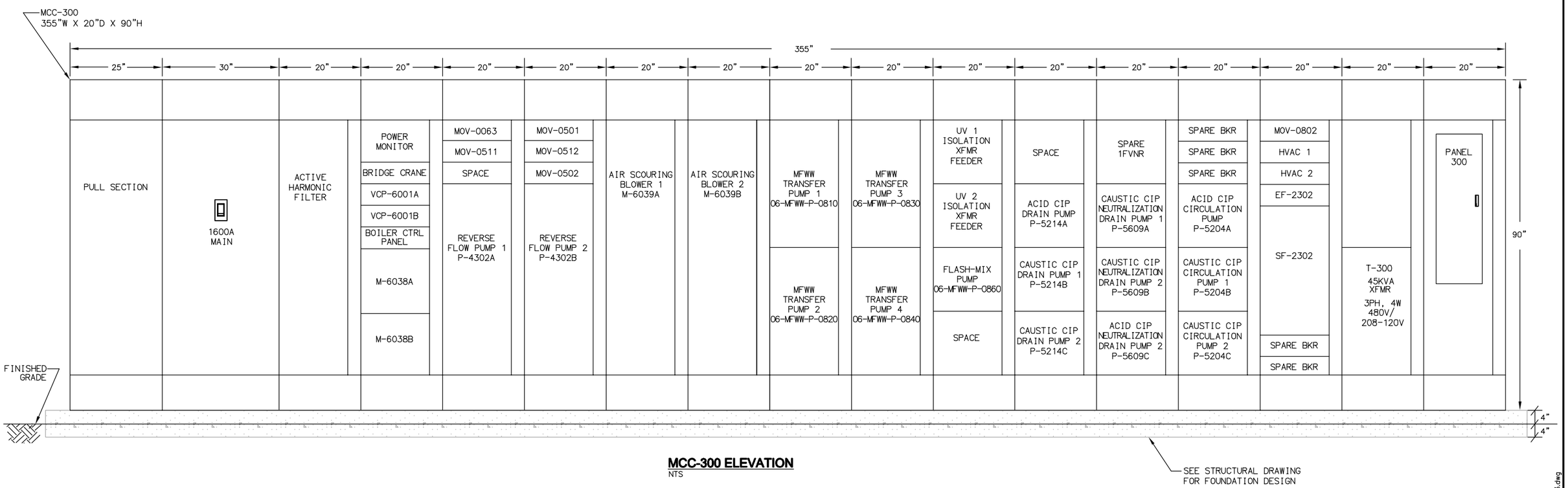

MCC-300 ELEVATION
NTS

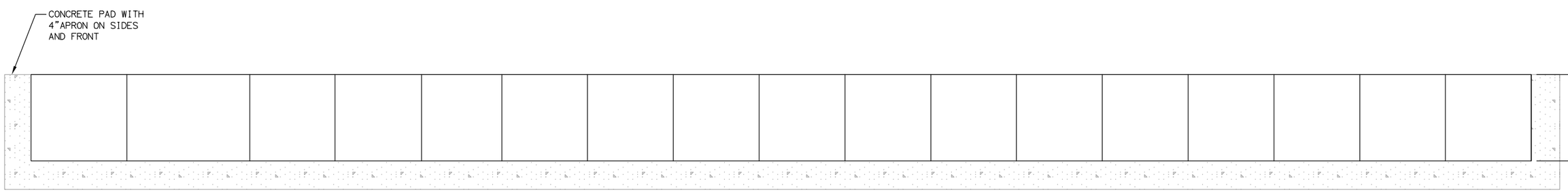

MCC-300 FLOOR PLAN
NTS

FILENAME: 6232-E303.dwg
LAST UPDATED: 01/16/2012 09:30 AM
LAST SAVED BY: ypsee

No.	DATE	REVISIONS	APPROVED

DESIGNED: YPS
DRAWN: YPS
CHECKED: RVT

RBF CONSULTING
carollo
IRVINE RANCH WATER DISTRICT

RHONDA V. TIEJERINA REE NO. 15473 ELECTRICAL ENGINEER DATE
CINDY MILLER RCE NO. 58116 PROJECT MANAGER DATE
PATRICIA UEMATSU RCE NO. 36762 PRINCIPAL ENGINEER DATE

IRVINE RANCH WATER DISTRICT
BAKER WATER TREATMENT PLANT
PROJECT NO. 11218

TREATMENT BUILDING EQUIPMENT ELEVATIONS

DRAWING
E303
SHEET
478 OF **632**