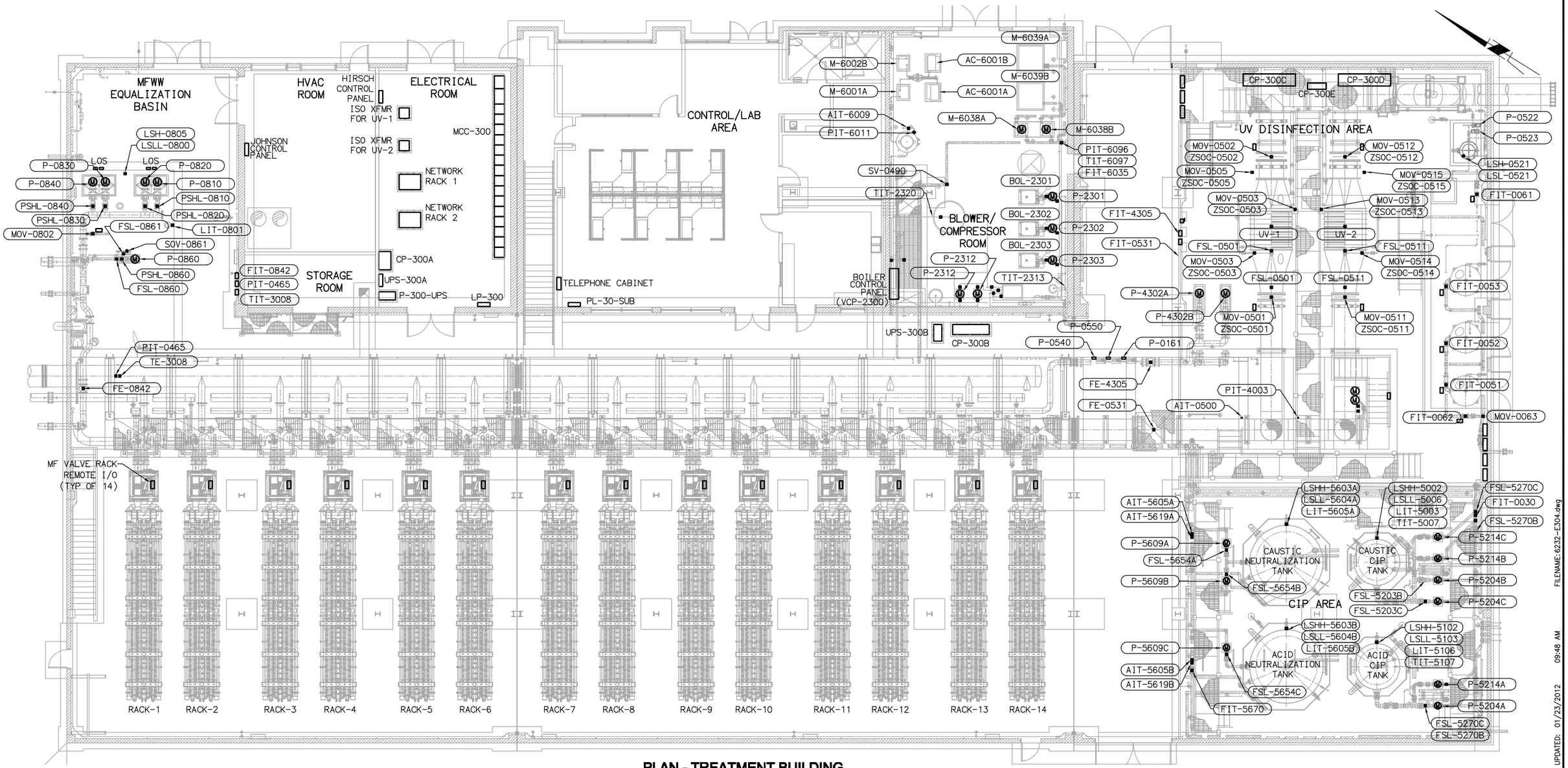

PLAN - TREATMENT BUILDING

SCALE: 1/8" = 1'-0"

FILENAME: 6232-E304.dwg

LAST UPDATED: 01/23/2012 09:48 AM

LAST SAVED BY: ypsee

No.	DATE	REVISIONS	APPROVED

DESIGNED: YPS

DRAWN: YPS

CHECKED: RVT

RBF CONSULTING

carollo

IRVINE RANCH WATER DISTRICT

RHONDA V. TIEJERINA REE NO. 15473 ELECTRICAL ENGINEER DATE

CINDY MILLER RCE NO. 58116 PROJECT MANAGER DATE

PATRICIA UEMATSU RCE NO. 36762 PRINCIPAL ENGINEER DATE

IRVINE RANCH WATER DISTRICT
BAKER WATER TREATMENT PLANT
PROJECT NO. 11218

TREATMENT BUILDING OVERALL ELECTRICAL PLAN

DRAWING **E304**

SHEET **479** OF **632**

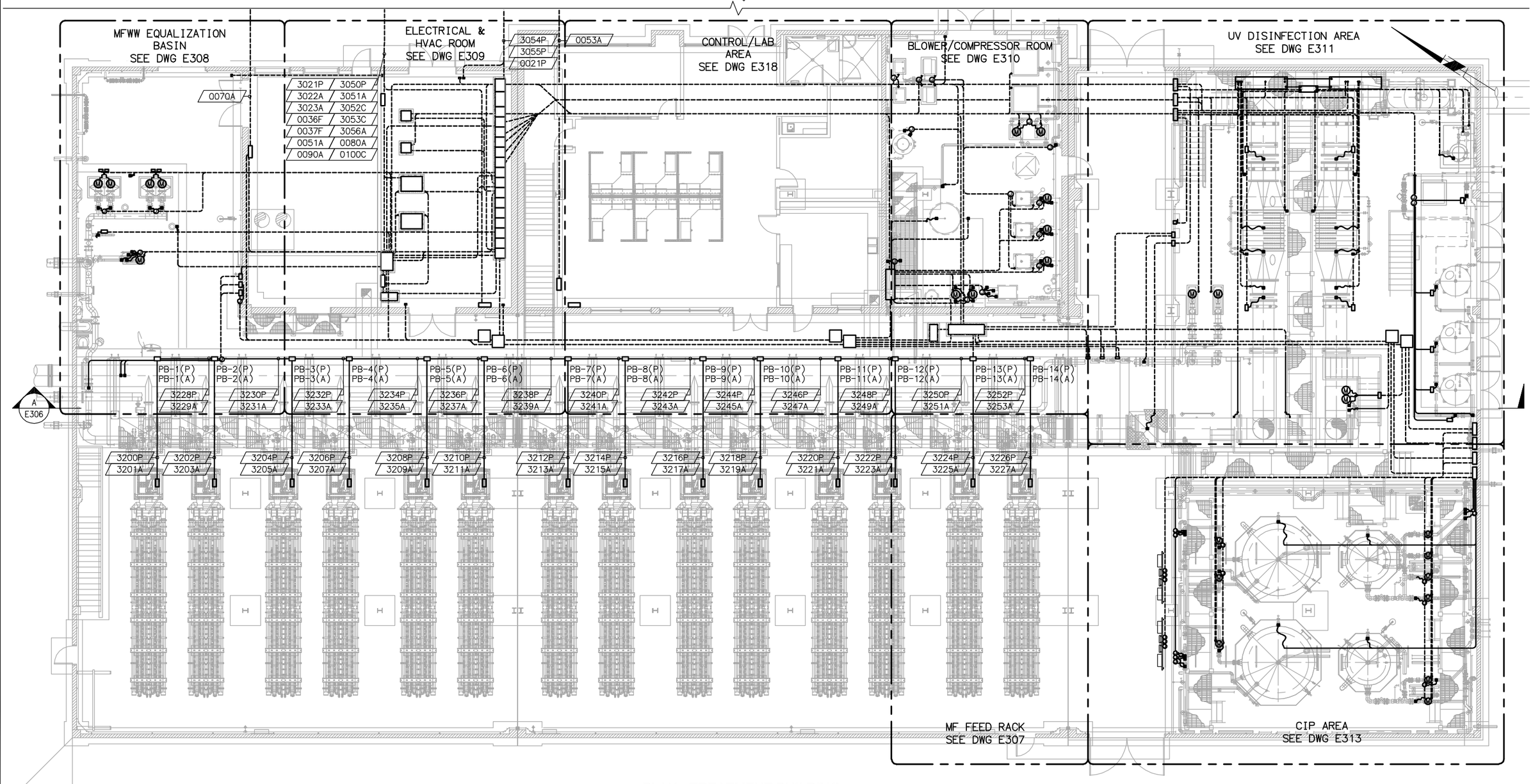

PLAN - TREATMENT BUILDING

SCALE: 1/8" = 1'-0"

NOTES:

1. SEE DWG E011 FOR CONTINUATION.

No.	DATE	REVISIONS	APPROVED

DESIGNED: YPS
DRAWN: YPS
CHECKED: RVT

RBF CONSULTING

carollo

IRVINE RANCH WATER DISTRICT

RHONDA V. TIEJERINA REE NO. 15473 ELECTRICAL ENGINEER DATE
CINDY MILLER RCE NO. 58116 PROJECT MANAGER DATE
PATRICIA UEMATSU RCE NO. 36762 PRINCIPAL ENGINEER DATE

IRVINE RANCH WATER DISTRICT
BAKER WATER TREATMENT PLANT
PROJECT NO. 11218

TREATMENT BUILDING OVERALL POWER PLAN

DRAWING **E305**

SHEET **480** OF **632**

LAST SAVED BY: ypsee LAST UPDATED: 01/18/2012 10:57 AM FILENAME: 6232-E305.dwg

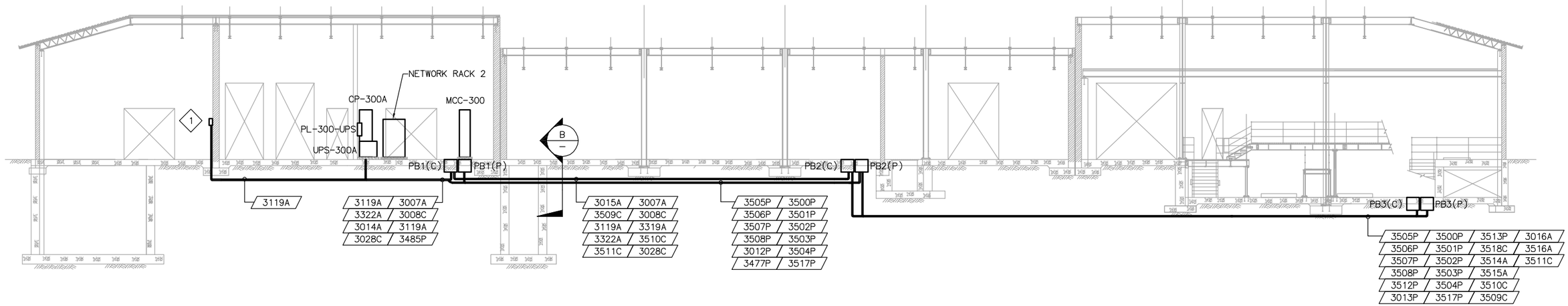

TREATMENT BUILDING SECTION (A / E305)

SCALE: 1/8" = 1'-0"

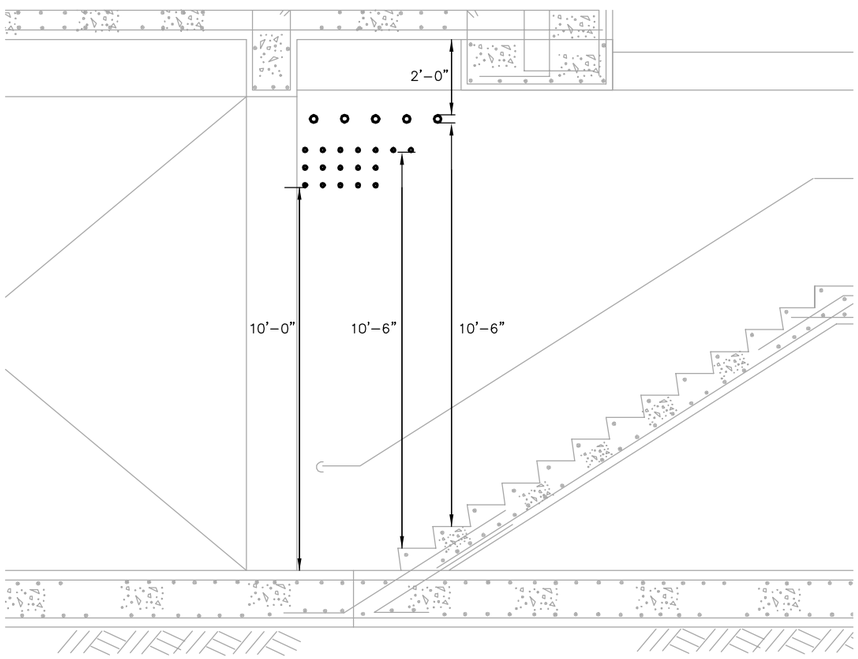

TREATMENT BUILDING SECTION (B / –)

SCALE: 1/2" = 1'-0"

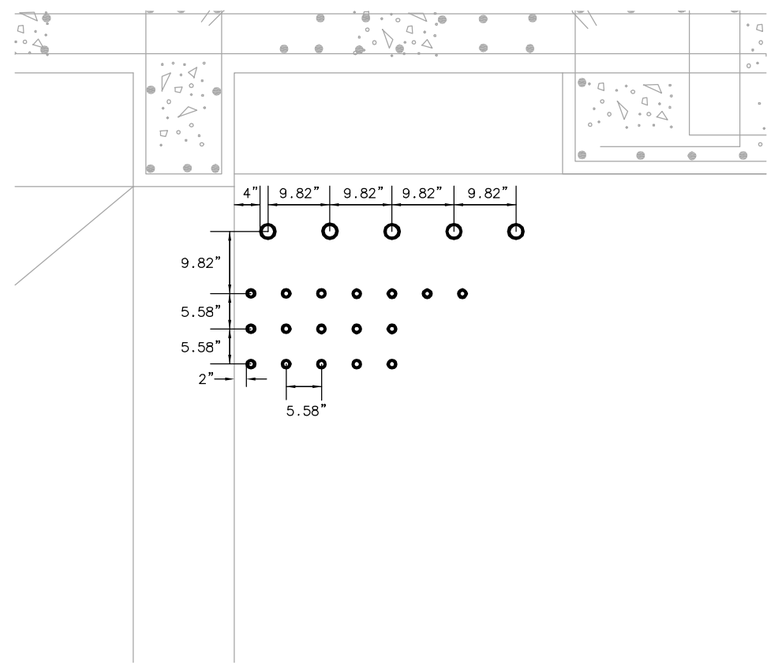

CONDUIT LAYOUT (C / –)

SCALE: 1" = 1'-0"

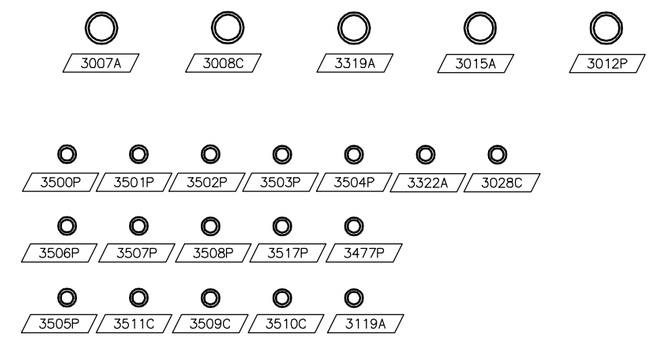

CONDUIT NUMBER (D / –)

NTS

NOTES:

1. JUNCTION FOR PIT-0465 & TIT-3008. SEE DWG E308

FILENAME: 6232-E306.dwg

LAST UPDATED: 01/19/2012 10:39 AM

LAST SAVED BY: ypsee

No.	DATE	REVISIONS	APPROVED

DESIGNED: YPS
DRAWN: YPS
CHECKED: RVT

RBF CONSULTING

carollo

IRVINE RANCH WATER DISTRICT

RHONDA V. TIEJERINA REE NO. 15473 ELECTRICAL ENGINEER DATE

CINDY MILLER RCE NO. 58116 PROJECT MANAGER DATE

PATRICIA UEMATSU RCE NO. 36762 PRINCIPAL ENGINEER DATE

IRVINE RANCH WATER DISTRICT
BAKER WATER TREATMENT PLANT
PROJECT NO. 11218

TREATMENT BUILDING OVERALL POWER SECTION

DRAWING E306

SHEET 481 OF 632

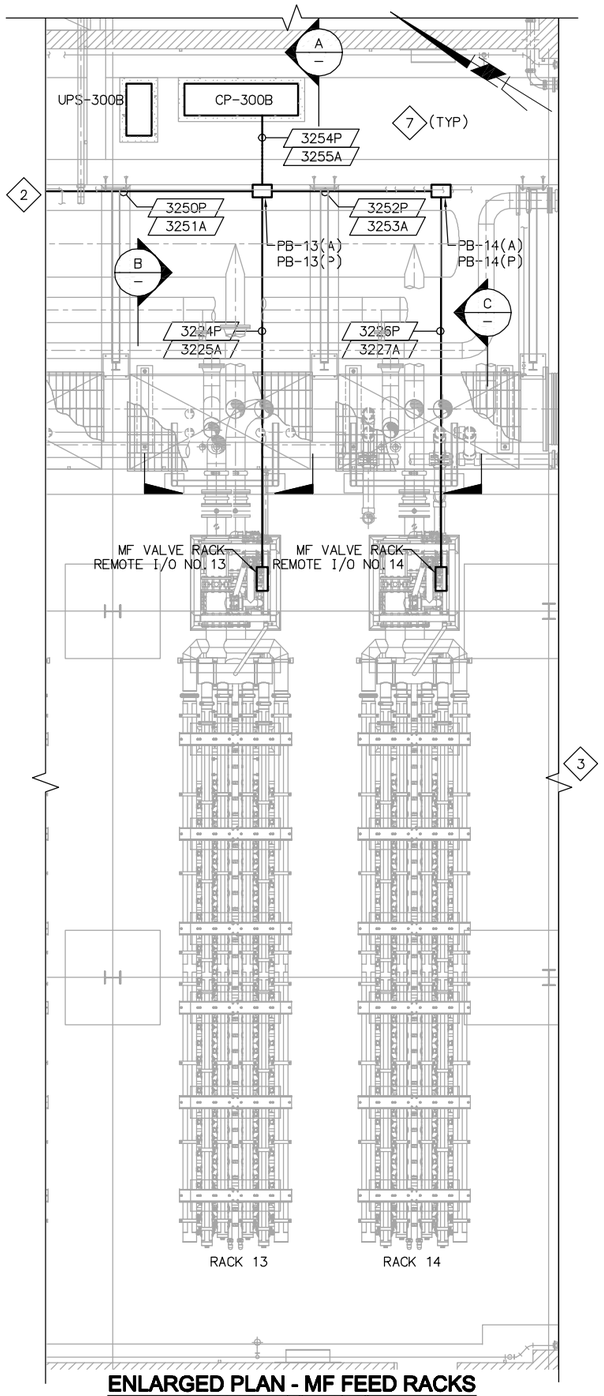

ENLARGED PLAN - MF FEED RACKS

SCALE: 1/4" = 1'-0"

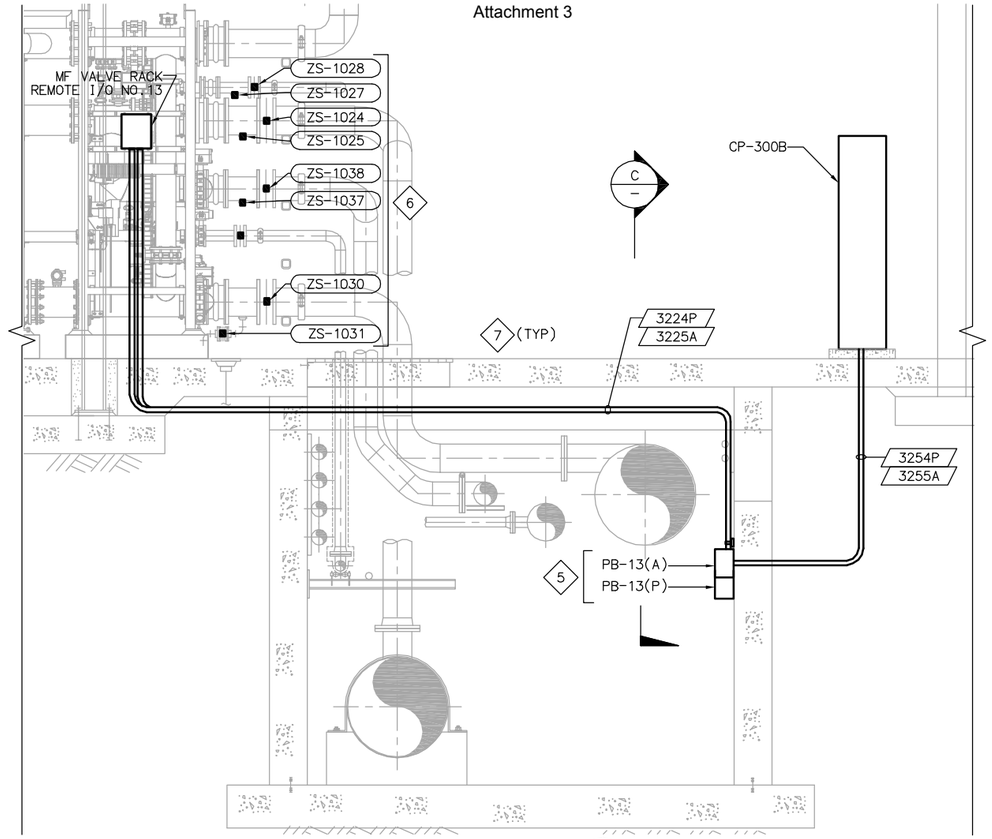

SECTION A

SCALE: 3/8" = 1'-0"

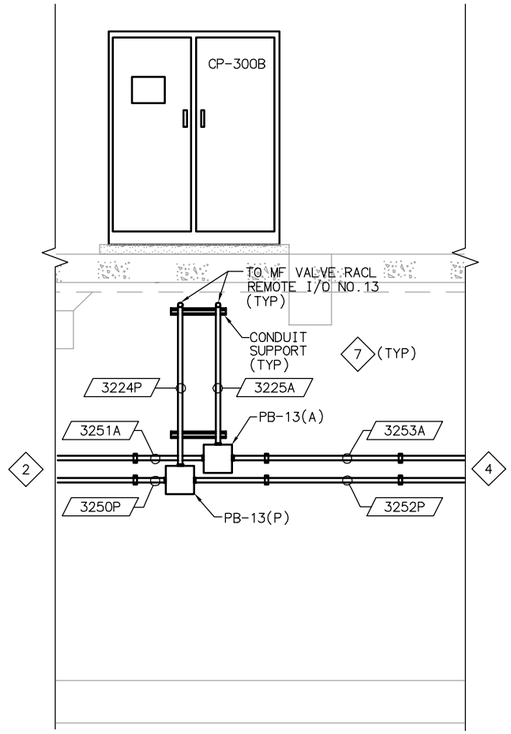

SECTION C

SCALE: 3/8" = 1'-0"

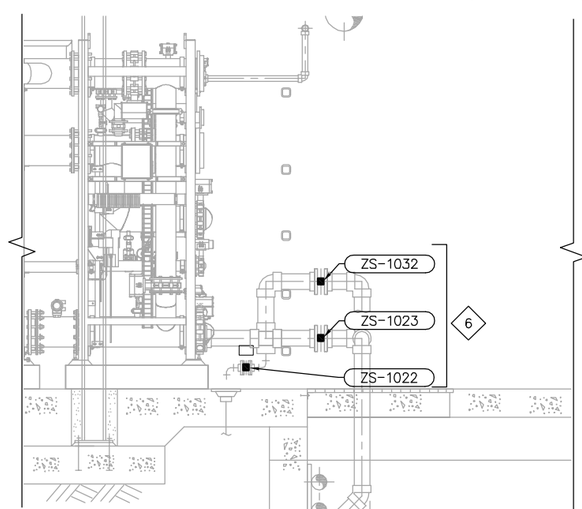

SECTION C

SCALE: 3/8" = 1'-0"

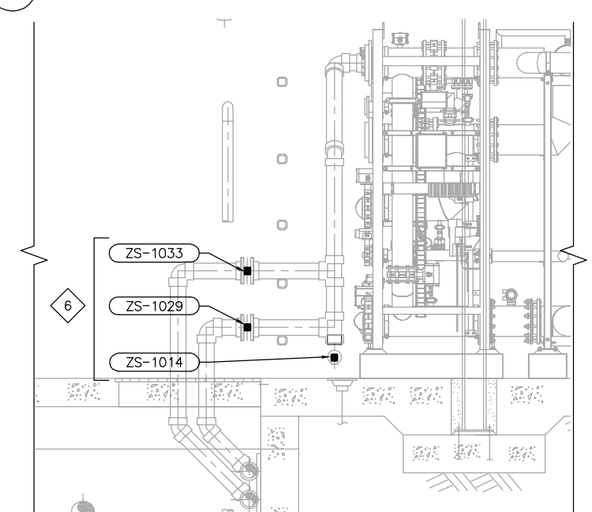

SECTION B

SCALE: 3/8" = 1'-0"

NOTES:

1. TO AIR COMPRESSOR/BOILER ROOM. SEE DWG E310 FOR CONTINUATION.
2. TO PB-12(P) AND PB-12(A). SEE DWG E305 FOR CONTINUATION.
3. TO UV DISINFECTION AREA & CIP AREA. SEE DWG E305, E311 & E313 FOR CONTINUATION.
4. TO PB-14(P) & PB-14(A). SEE DWG E305 FOR CONTINUATION.
5. 12"H X 12"W X 8"D PULLBOX/JUNCTION BOX (TYP)
6. FILTRATION SUPPLIER TO PROVIDE LIMIT SWITCHES AND WIRING. CONTRACTOR TO INSTALL WIRING TO MF VALVE RACK REMOTE I/O PER MANUFACTURER'S RECOMMENDATION.
7. CONDUIT ROUTING SHOWN ARE DIAGRAMMATIC ONLY. CONTRACTOR TO SUBMIT CONDUIT LAYOUT FOR ENGINEER APPROVAL PRIOR TO INSTALLATION.

FILENAME: 6232-E307.dwg LAST UPDATED: 01/25/2012 03:31 PM LAST SAVED BY: ypsee

No.	DATE	REVISIONS	APPROVED

DESIGNED: YPS
DRAWN: YPS
CHECKED: RVT

RBF CONSULTING

carollo

IRVINE RANCH WATER DISTRICT

RHONDA V. TIEJERINA REE NO. 15473 ELECTRICAL ENGINEER DATE
CINDY MILLER RCE NO. 58116 PROJECT MANAGER DATE
PATRICIA UEMATSU RCE NO. 36762 PRINCIPAL ENGINEER DATE

IRVINE RANCH WATER DISTRICT
BAKER WATER TREATMENT PLANT
PROJECT NO. 11218

TREATMENT BUILDING MF FEED RACK ENLARGED PLAN

DRAWING **E307**

SHEET **482** OF **632**

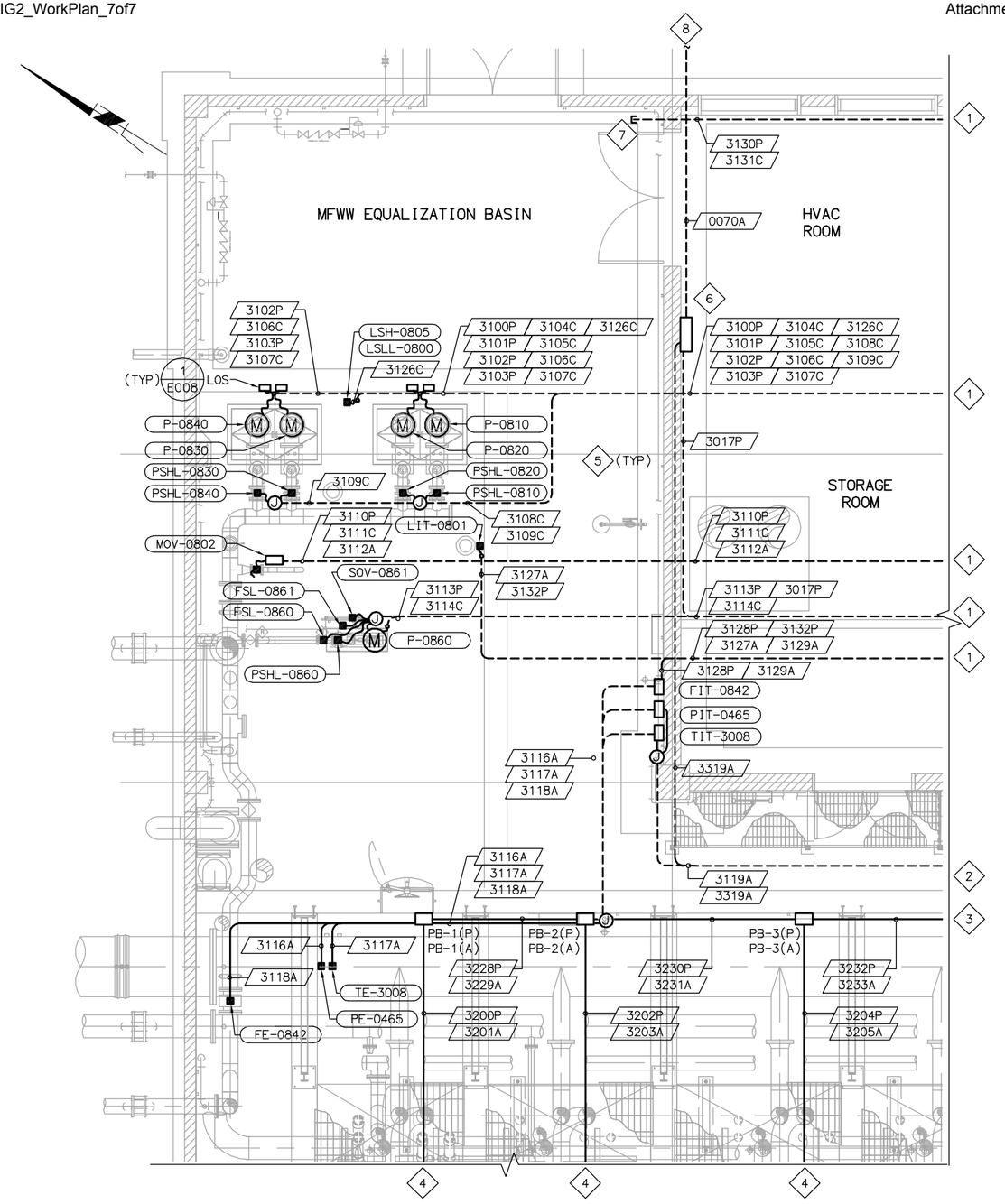

ENLARGED PLAN

SCALE: 1/4" = 1'-0"

NOTES:

1. TO ELECTRICAL ROOM. SEE DWG E309 FOR CONTINUATION.
2. TO CP-300B. SEE DWG E305 FOR CONTINUATION.
3. TO PB-4(P) & PB-4(A). SEE DWG E305 FOR CONTINUATION.
4. TO MF FEED RACK REMOTE I/O. SEE DWG E305 & E307 FOR CONTINUATION AND DETAILS.
5. CONDUIT ROUTING SHOWN ARE DIAGRAMMATIC ONLY. CONTRACTOR TO SUBMIT CONDUIT LAYOUT FOR ENGINEER APPROVAL PRIOR TO INSTALLATION.
6. JOHNSON CONTROL PANEL. SEE DWG H006 FOR CONNECTION DETAILS
7. STUB UP CONDUIT MIN 6" AFF AND CAP OFF ENDS.
8. TO COMMUNICATION PULLBOX 2. SEE DWG E011 FOR CONTINUATION.
9. PROVIDE AND INSTALL A DISCONNECT SWITCH FOR ALL MOTORS BASED ON SINGLE LINE DIAGRAM UNLESS OTHERWISE NOTED.

* EQUIPMENT TAG NUMBER ARE PRECEDED WITH 06-UW2-

LAST SAVED BY: ypsee LAST UPDATED: 01/18/2012 05:33 PM FILENAME: 6232-E308.dwg

No.	DATE	REVISIONS	APPROVED

DESIGNED: YPS
DRAWN: YPS
CHECKED: RVT

RBF CONSULTING

carollo

IRVINE RANCH WATER DISTRICT

RHONDA V. TIEJERINA REE NO. 15473 ELECTRICAL ENGINEER DATE
CINDY MILLER RCE NO. 58116 PROJECT MANAGER DATE
PATRICIA UEMATSU RCE NO. 36762 PRINCIPAL ENGINEER DATE

IRVINE RANCH WATER DISTRICT
BAKER WATER TREATMENT PLANT
PROJECT NO. 11218

TREATMENT BUILDING
MFWW EQUALIZATION BASIN
ENLARGED PLAN

DRAWING E308
SHEET 483 OF 632

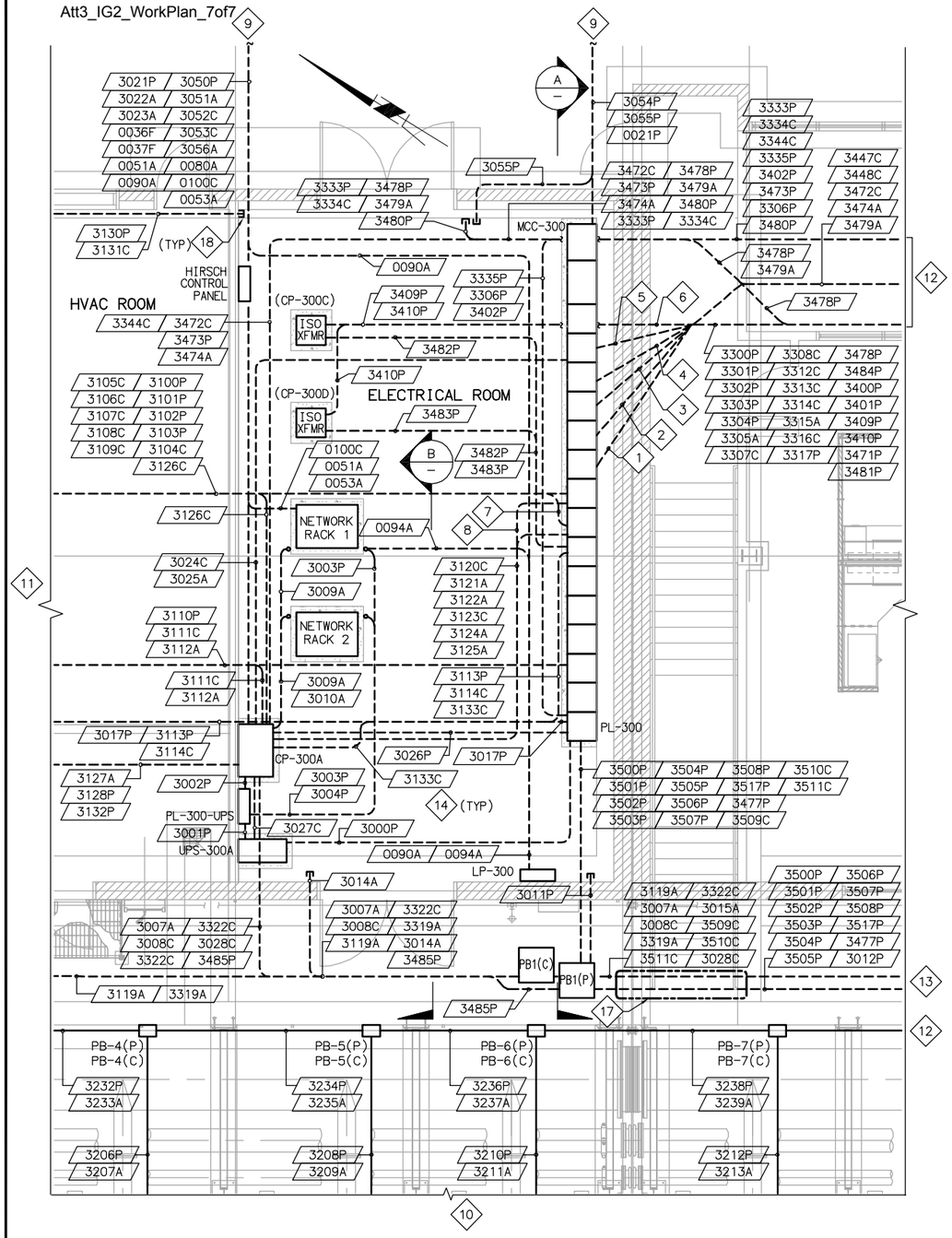

ENLARGED PLAN
SCALE: 1/4" = 1'-0"

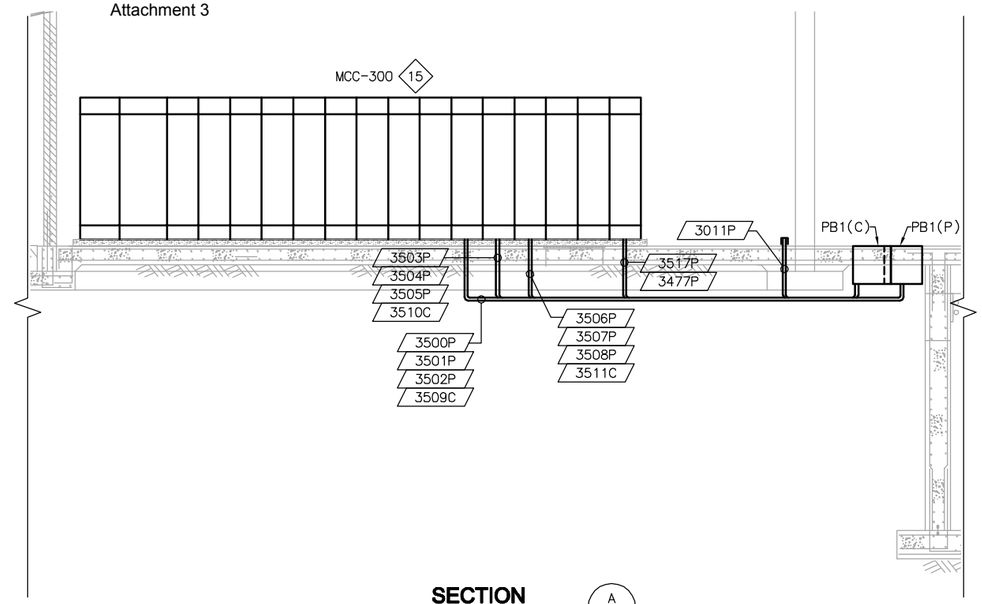

SECTION A
SCALE: 1/4" = 1'-0"

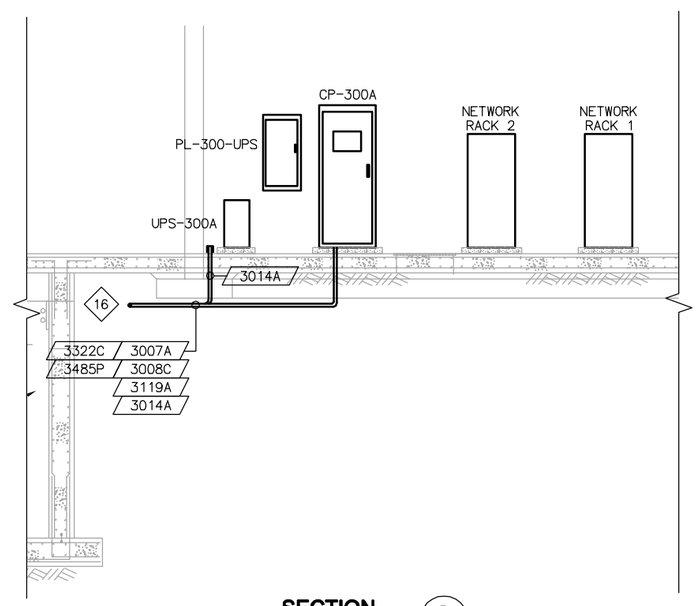

SECTION B
SCALE: 1/4" = 1'-0"

NOTES:

1. CONDUIT 3301P, 3314C.
2. CONDUIT 3300P, 3313C, 3305A, 3312C.
3. CONDUIT 3401P, 3448C, 3316C, 3315A, 3471P.
4. CONDUIT 3400P, 3447C, 3481P.
5. CONDUIT 3304P, 3302P, 3303P, 3307C, 3308C, 3317P, 3484P.
6. CONDUIT 3409P, 3410P.
7. CONDUIT 3102P, 3103P, 3106C, 3107C, 3109C.
8. 3120C, 3121A, 3122A.
9. SEE DWG E011 FOR CONTINUATION.
10. TO MF VALVE RACK REMOTE I/O. SEE DWG E307 FOR DETAILS.
11. TO MFWW EQUALIZATION BASIN. SEE DWG E308 FOR CONTINUATION.
12. SEE DWG E305 AND E310 FOR CONTINUATION.
13. TO PB2(P) & PB2(C). SEE DWG E310 FOR CONTINUATION.
14. ALL UNDERGROUND CONDUIT SHALL BE ROUTED UNDER THE FLOOR SLAB. CONDUIT FROM/TO MFWW EQUALIZATION BAIN SHALL BE ROUTED IN THE FLOOR SLAB. CONDUIT ROUTING SHOWN ARE DIAGRAMMATIC ONLY. CONTRACTOR TO SUBMIT CONDUIT LAYOUT FOR ENGINEER APPROVAL PRIOR TO INSTALLATION.
15. SEE DWG E303 FOR MCC-300 ELEVATION DETAILS
16. FROM PB1(C).
17. SEE DWG E306 FOR SECTION DETAILS.
18. STUB UP CONDUIT MIN 6" AFF AND CAP OFF ENDS.

FILENAME: 6232-E309.dwg
LAST UPDATED: 01/30/2012 01:41 PM
LAST SAVED BY: yssee

No.	DATE	REVISIONS	APPROVED

DESIGNED: YPS
DRAWN: YPS
CHECKED: RVT

RBF CONSULTING
carollo
IRVINE RANCH WATER DISTRICT

RHONDA V. TIEJERINA REE NO. 15473 ELECTRICAL ENGINEER DATE
CINDY MILLER RCE NO. 58116 PROJECT MANAGER DATE
PATRICIA UEMATSU RCE NO. 36762 PRINCIPAL ENGINEER DATE

IRVINE RANCH WATER DISTRICT
BAKER WATER TREATMENT PLANT
PROJECT NO. 11218

TREATMENT BUILDING
ELECTRICAL ROOM
ENLARGED PLAN

DRAWING E309
SHEET 484 OF 632

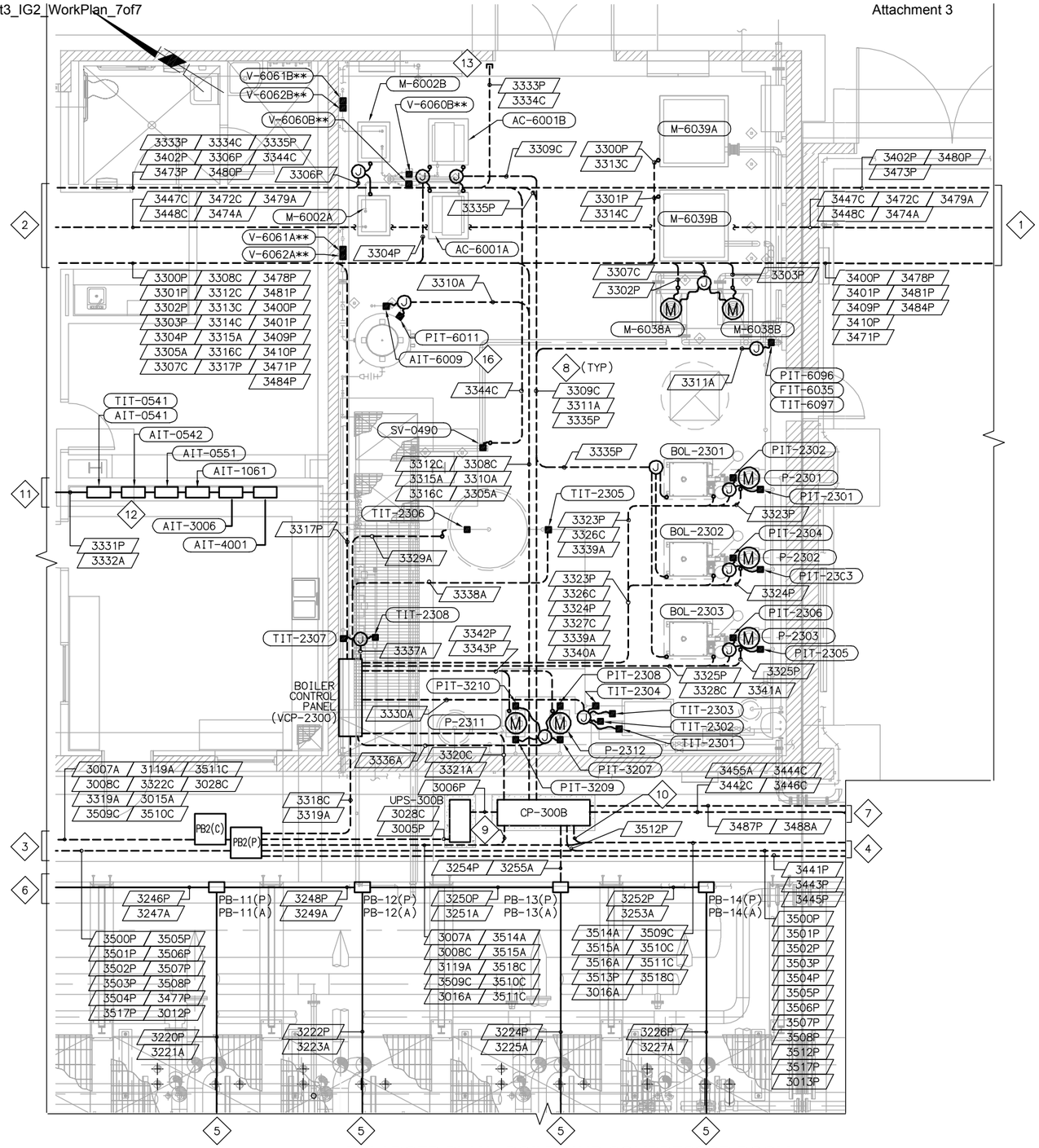

ENLARGED PLAN - BOILER/AIR COMPRESSOR ROOM

SCALE: 1/4" = 1'-0"

NOTES:

1. TO UV DISINFECTION AREA. SEE DWG E311 AND E305 FOR CONTINUATION.
2. TO ELECTRICAL ROOM. SEE DWG E309 AND E305 FOR CONTINUATION.
3. TO PB1(P) AND PB2(C). SEE DWG E309 FOR CONTINUATION.
4. TO PB3(P) AND PB3(C). SEE DWG E305 FOR CONTINUATION.
5. TO MF FEED RACK REMOTE I/O. SEE DWG E305 & E307 FOR CONTINUATION AND DETAILS
6. TO PB-10(P) & PB-10(A). SEE DWG E305 FOR CONTINUATION.
7. TO P-0540, P-0550, P-1061 & PIT-4003. SEE DWG E311 FOR DETAILS AND CONTINUATION.
8. ALL UNDERGROUND CONDUIT SHALL BE ROUTED UNDER THE FLOOR SLAB. CONDUIT ROUTING SHOWN ARE DIAGRAMMATIC ONLY. CONTRACTOR TO SUBMIT CONDUIT LAYOUT FOR ENGINEER APPROVAL PRIOR TO INSTALLATION.
9. CONDUIT 3007A, 3008C AND 3119A.
10. CONDUIT 3513P, 3514A, 3515A AND 3516A.
11. SEE DWG E318 FOR CONTINUATION.
12. ANALYZERS. SEE DWG I022 FOR MOUNTING DETAILS.
13. STUB UP CONDUIT MIN 6" AFF AND CAP OFF ENDS.
14. ALL HVAC INSTRUMENTS (TITs & PITs) SHOWN ARE DIAGRAMMATIC ONLY. REFER TO HVAC DRAWINGS FOR DETAILS.
15. PROVIDE AND INSTALL A DISCONNECT SWITCH FOR ALL MOTORS BASED ON SINGLE LINE DIAGRAM UNLESS OTHERWISE NOTED.
16. 24VDC POWER FOR AIT-6009 INSTALLED IN CONDUIT 3310A

** SOLENOID VALVE PROVIDE BY BLOWER/COMPRESSOR SYSTEM SUPPLIER. CONTRACTOR TO PROVIDE AND INSTALL WIRING PER MANUFACTURER'S RECOMMENDATION. VERIFY WITH THE SYSTEM SUPPLIER PRIOR TO INSTALLATION.

FILENAME: 6232-E310.dwg
LAST UPDATED: 01/23/2012 09:59 AM
LAST SAVED BY: ypsee

No.	DATE	REVISIONS	APPROVED

DESIGNED: YPS
DRAWN: YPS
CHECKED: RVT

RBF CONSULTING

carollo

IRVINE RANCH WATER DISTRICT

RHONDA V. TIEJERINA REE NO. 15473 ELECTRICAL ENGINEER DATE
CINDY MILLER RCE NO. 58116 PROJECT MANAGER DATE
PATRICIA UEMATSU RCE NO. 36762 PRINCIPAL ENGINEER DATE

IRVINE RANCH WATER DISTRICT
BAKER WATER TREATMENT PLANT
PROJECT NO. 11218

TREATMENT BUILDING BLOWER/COMPRESSOR ROOM ELECTRICAL ENLARGED PLAN

DRAWING **E310**

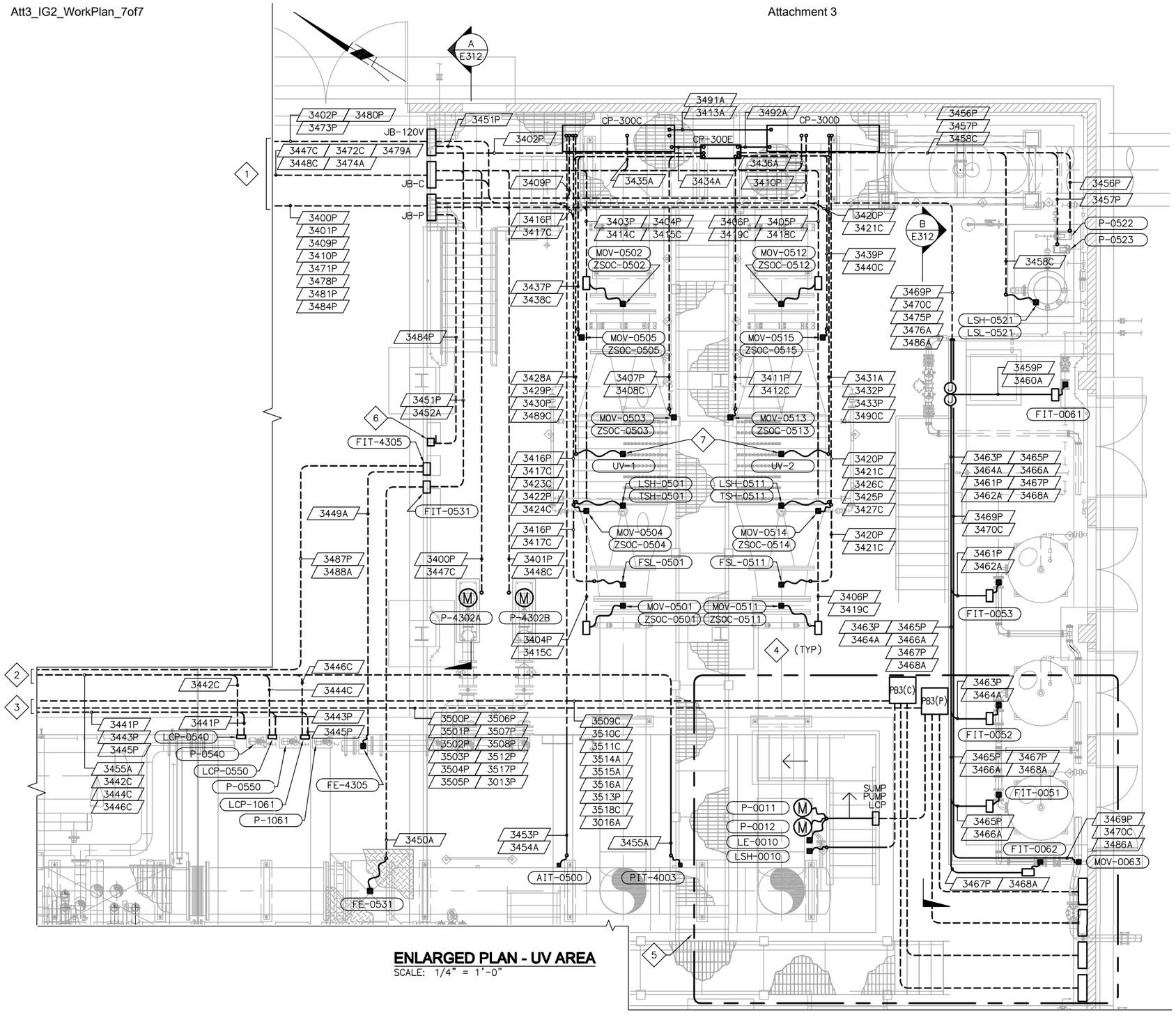

ENLARGED PLAN - UV AREA

SCALE: 1/4" = 1'-0"

NOTES:

1. SEE BLOWER/COMPRESSOR ROOM. SEE DWG E310 FOR CONTINUATION.
2. TO CP-300B. SEE DWG E310 FOR CONTINUATION.
3. TO PB2(P) & PB2(C). SEE DWG E310 FOR CONTINUATION.
4. ALL UNDERGROUND CONDUIT SHALL BE ROUTED UNDER THE FLOOR SLAB. CONDUIT ROUTING SHOWN ARE DIAGRAMMATIC ONLY. CONTRACTOR TO SUBMIT CONDUIT LAYOUT FOR ENGINEER APPROVAL PRIOR TO INSTALLATION.
5. SEE DWG E314 FOR DETAILS
6. PROVIDE AND INSTALL BRIDGE CRANE DISCONNECT PER MANUFACTURER RECOMMENDATION.
7. CONTRACTOR SHALL VERIFY AND COORDINATE WITH THE UV SYSTEM SUPPLIER FOR POWER/CONTROL JUNCTION BOX LOCATION ON THE UV REACTOR. CONTRACTOR TO EXTEND THE CONDUIT & WIRING TO UV REACTOR JUNCTION BOXES.
8. PROVIDE AND INSTALL A DISCONNECT SWITCH FOR ALL MOTORS BASED ON SINGLE LINE DIAGRAM UNLESS OTHERWISE NOTED.

FILENAME: 6232-E311.dwg
LAST UPDATED: 01/18/2012 04:14 PM
LAST SAVED BY: ypsee

No.	DATE	REVISIONS	APPROVED

DESIGNED: YPS
DRAWN: YPS
CHECKED: RVT

RBF CONSULTING

carollo

IRVINE RANCH WATER DISTRICT

RHONDA V. TIEJERINA REE NO. 15473 ELECTRICAL ENGINEER DATE
CINDY MILLER RCE NO. 58116 PROJECT MANAGER DATE
PATRICIA UEMATSU RCE NO. 36762 PRINCIPAL ENGINEER DATE

IRVINE RANCH WATER DISTRICT
BAKER WATER TREATMENT PLANT
PROJECT NO. 11218

TREATMENT BUILDING
UV DISINFECTION AREA
ELECTRICAL ENLARGED PLAN

DRAWING
E311
SHEET
486 OF **632**

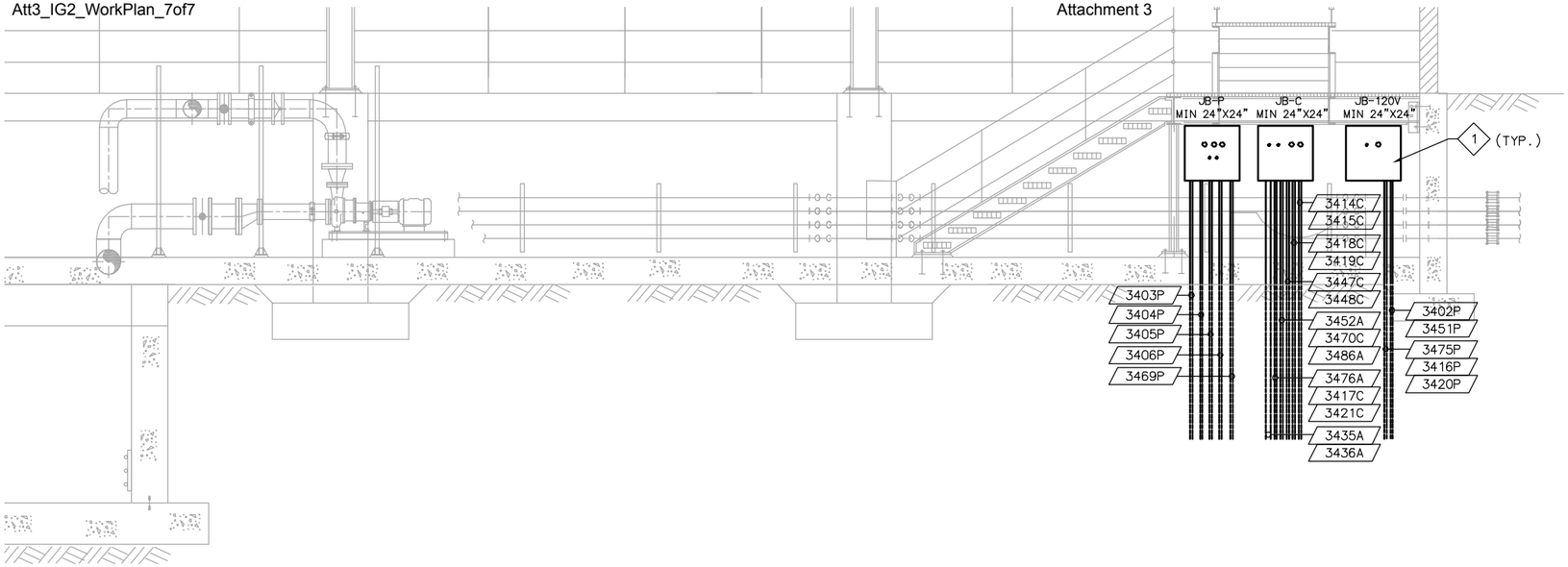

SECTION A / E311
SCALE: 3/8"=1'-0"

NOTES:

1. CONTRACTOR TO WALL MOUNT JUNCTION BOX AS SHOWN. JUNCTION BOX SHALL BE INSTALLED BASED ON FIELD CONDITIONS. FIELD RELOCATE IF REQUIRED.

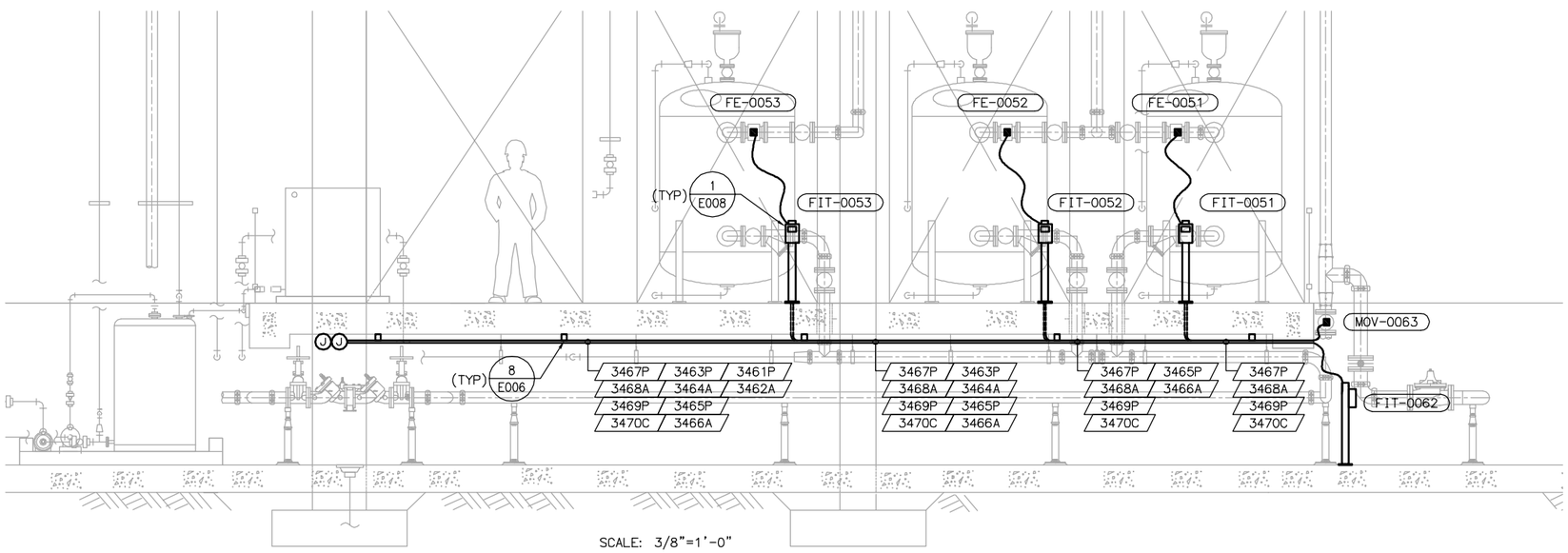

SCALE: 3/8"=1'-0"

SECTION B / E311
SCALE: 3/8"=1'-0"

No.	DATE	REVISIONS	APPROVED

DESIGNED: YPS
DRAWN: YPS
CHECKED: RVT

RBF CONSULTING

carollo

IRVINE RANCH WATER DISTRICT

RHONDA V. TIEJERINA REE NO. 15473 ELECTRICAL ENGINEER DATE
CINDY MILLER RCE NO. 58116 PROJECT MANAGER DATE
PATRICIA UEMATSU RCE NO. 36762 PRINCIPAL ENGINEER DATE

IRVINE RANCH WATER DISTRICT
BAKER WATER TREATMENT PLANT
PROJECT NO. 11218

TREATMENT BUILDING UV DISINFECTION AREA SECTIONS

DRAWING
E312
SHEET
487 OF 632

LAST SAVED BY: ypsee LAST UPDATED: 01/18/2012 11:17 AM FILENAME: 6232-E312.dwg

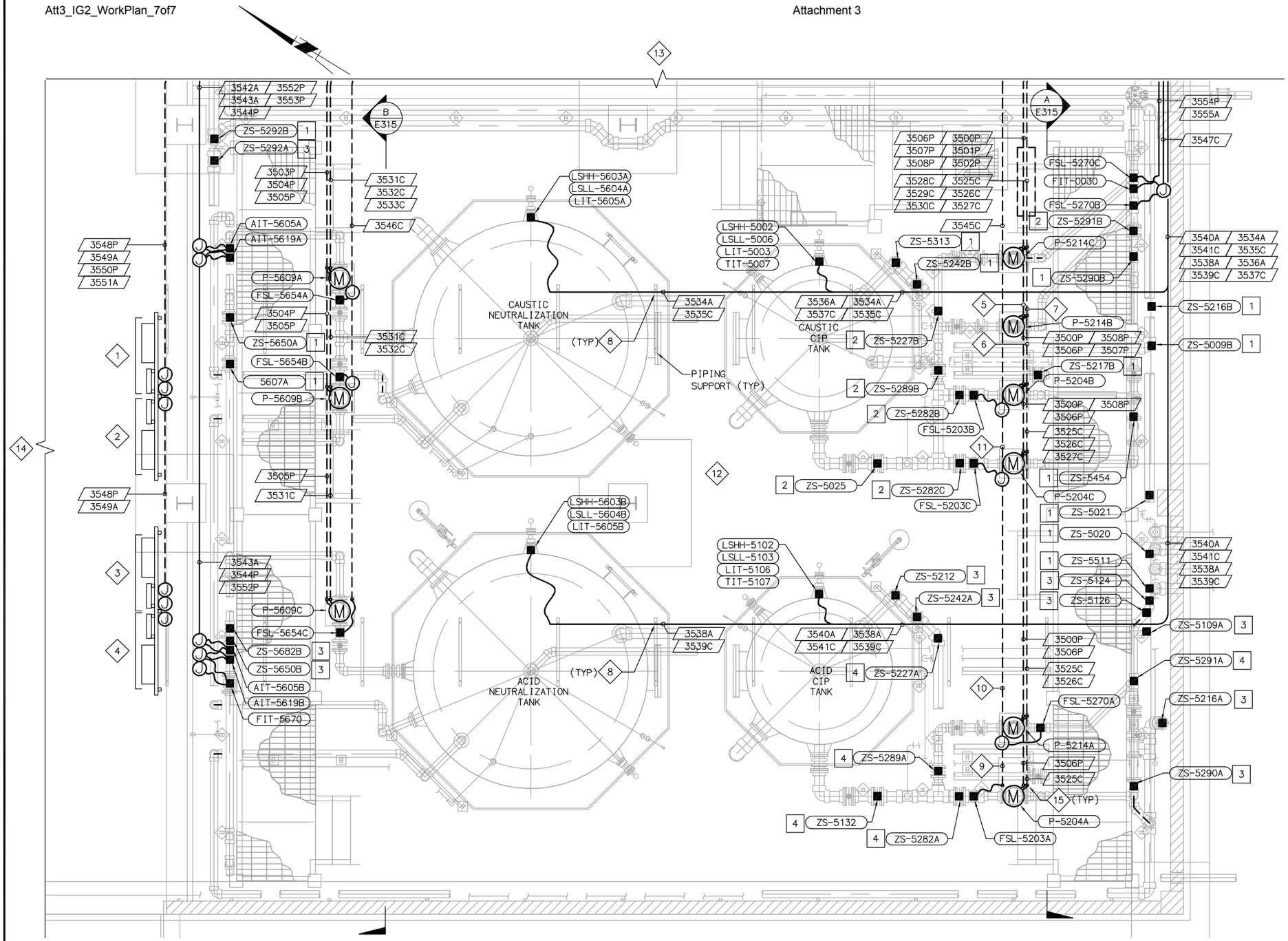

ENLARGED PLAN - CIP AREA

SCALE: 3/8" = 1'-0"

NOTES:

1. CAUSTIC CHLORINE SYSTEM POWER PANEL AND SOLENOID VALVE & I/O MANIFOLD. SEE DWG E315 FOR DETAILS
2. CAUSTIC CIRCULATION PUMP SYSTEM POWER PANEL AND SOLENOID VALVE & I/O MANIFOLD. SEE DWG E315 FOR DETAILS
3. CIP CITRIC ACID SYSTEM POWER PANEL AND SOLENOID VALVE & I/O MANIFOLD. SEE DWG E315 FOR DETAILS
4. CIP CITRIC ACID CIRCULATION POWER PANEL AND SOLENOID VALVE & I/O MANIFOLD. SEE DWG E315 FOR DETAILS
5. 3500P / 3501P / 3506P / 3507P / 3508P
6. 3525C / 3526C / 3527C / 3528C
7. 3525C / 3526C / 3527C / 3528C / 3529C
8. SUPPORT CONDUIT AT PIPING SUPPORT ABOVE TANK AS SHOWN. SEE DWG M318 & M319 FOR SUPPORT DETAILS.
9. 3/4"C - 3#6 FOR FSL
10. 3/4"C - 6#16 FOR FSLs
11. 3/4"C - 9#16 FOR FSLs
12. CONTAINMENT WALL PENETRATION IS PROHIBITED. ALL CONDUIT ROUTING SHALL BE ABOVE CONTAINMENT WALL HEIGHT WITH PROPER SUPPORT. CONDUIT ROUTING ARE BASED ON THE FIELD CONDITIONS. FIELD RELOCATE IF REQUIRED. CONTRACTOR TO SUBMIT CONDUIT SUPPORT LAYOUT FOR ENGINEER APPROVAL PRIOR TO INSTALLATION.
13. SEE DWG E314 FOR CONTINUATION.
14. SEE DWG E305 FOR CONTINUATION.
15. CONDUIT EMBEDDED IN MOTOR PAD AS SHOWN.
16. PROVIDE AND INSTALL A DISCONNECT SWITCH FOR ALL MOTORS BASED ON SINGLE LINE DIAGRAM UNLESS OTHERWISE NOTED.

1. FILTRATION SUPPLIER TO PROVIDE LIMIT SWITCHES AND WIRING. CONTRACTOR TO INSTALL WIRING TO CAUSTIC CHLORINE SYSTEM I/O MANIFOLD PER MANUFACTURER RECOMMENDATION.
2. FILTRATION SUPPLIER TO PROVIDE LIMIT SWITCHES AND WIRING. CONTRACTOR TO INSTALL WIRING TO CAUSTIC CIRCULATION PUMP SYSTEM I/O MANIFOLD PER MANUFACTURER RECOMMENDATION.
3. FILTRATION SUPPLIER TO PROVIDE LIMIT SWITCHES AND WIRING. CONTRACTOR TO INSTALL WIRING TO CIP CITRIC ACID SYSTEM I/O MANIFOLD PER MANUFACTURER RECOMMENDATION.
4. FILTRATION SUPPLIER TO PROVIDE LIMIT SWITCHES AND WIRING. CONTRACTOR TO INSTALL WIRING TO CIP CITRIC ACID CIRCULATION I/O MANIFOLD PER MANUFACTURER RECOMMENDATION.

FILENAME: 6232-E313.dwg LAST UPDATED: 01/18/2012 04:35 PM LAST SAVED BY: ypsee

No.	DATE	REVISIONS	APPROVED

DESIGNED: YPS
DRAWN: YPS
CHECKED: RVT

RBF CONSULTING | carollo | IRVINE RANCH WATER DISTRICT

RHONDA V. TIEJERINA REE NO. 15473 ELECTRICAL ENGINEER DATE
CINDY MILLER RCE NO. 58116 PROJECT MANAGER DATE
PATRICIA UEMATSU RCE NO. 36762 PRINCIPAL ENGINEER DATE

IRVINE RANCH WATER DISTRICT
BAKER WATER TREATMENT PLANT
PROJECT NO. 11218

TREATMENT BUILDING
CIP AREA
ELECTRICAL ENLARGED PLAN I

DRAWING E313
SHEET 488 OF 632

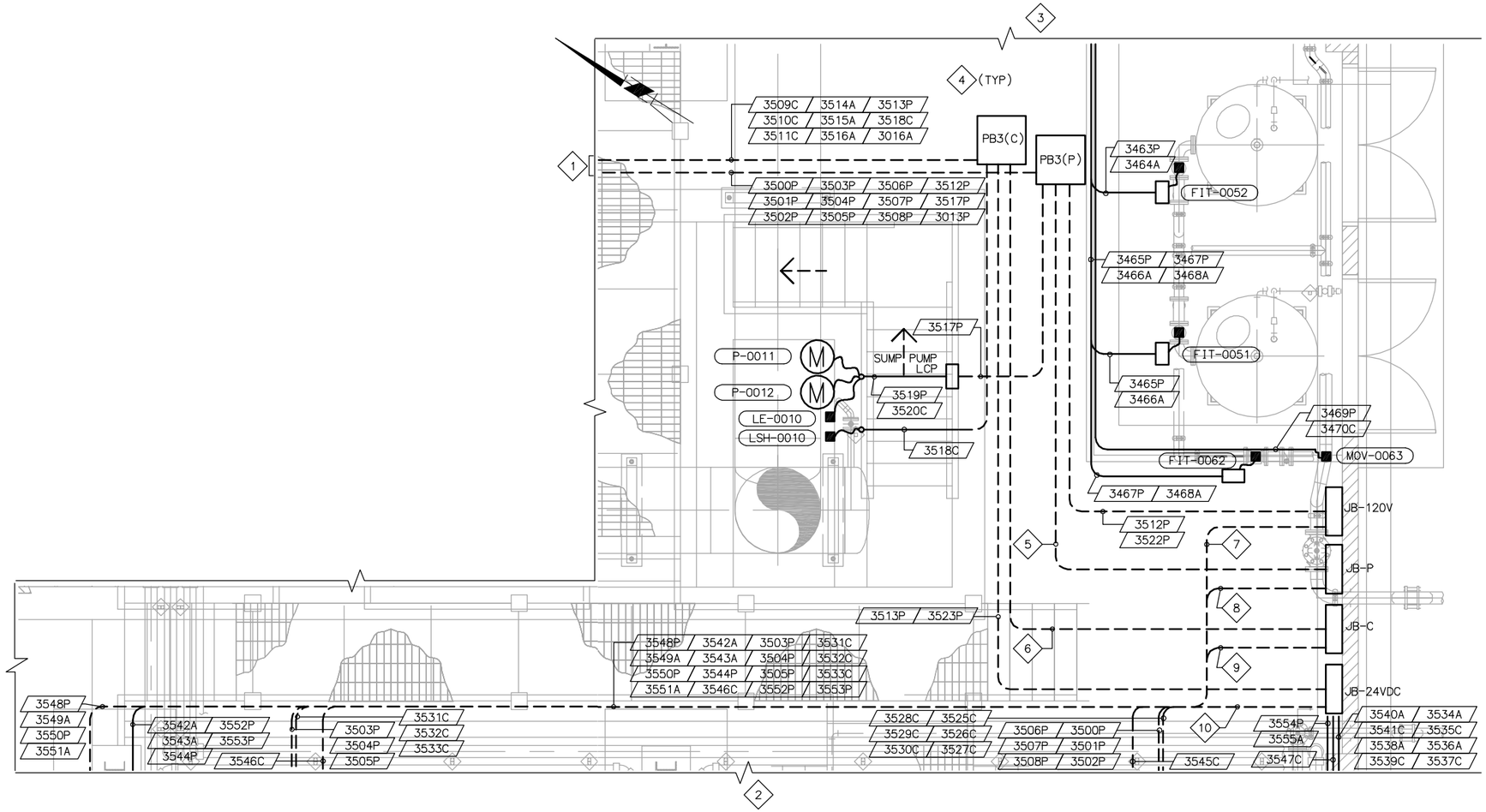

ENLARGED PLAN - CIP AREA

SCALE: 3/8" = 1'-0"

NOTES:

1. TO PB2(P) & PB2(C). SEE DWG E310 & E305 FOR CONTINUATION.
2. SEE DWG E313 FOR CONTINUATION.
3. SEE DWG E311 FOR CONTINUATION.
4. ALL UNDERGROUND CONDUIT SHALL BE ROUTED UNDER THE FLOOR SLAB. CONDUIT ROUTING SHOWN ARE DIAGRAMMATIC ONLY. CONTAINMENT WALL PENETRATION IS PROHIBITED. ALL CONDUIT ROUTING SHALL BE ABOVE CONTAINMENT WALL HEIGHT WITH PROPER SUPPORT. CONDUIT ROUTING ARE BASED ON THE FIELD CONDITIONS. FIELD RELOCATE IF REQUIRED. CONTRACTOR TO SUBMIT CONDUIT SUPPORT LAYOUT FOR ENGINEER APPROVAL PRIOR TO INSTALLATION.
5. 3500P 3503P 3506P 3521P / 3501P 3504P 3507P / 3502P 3505P 3508P
6. 3509C 3514A 3524C / 3510C 3515A / 3511C 3516A
7. 3544P 3548P 3554P / 3550P 3552P 3553P
8. 3500P 3503P 3506P / 3501P 3504P 3507P / 3502P 3505P 3508P
9. 3525C 3528C 3531C 3534A 3540A 3549A / 3526C 3529C 3532C 3536A 3542A 3551A / 3527C 3530C 3533C 3538A 3543A 3555A
10. 3535C 3541C 3545C / 3537C 3546C / 3539C 3547C

FILENAME: 6232-E314.dwg
LAST UPDATED: 01/18/2012 11:20 AM
LAST SAVED BY: ypsee

No.	DATE	REVISIONS	APPROVED

DESIGNED: YPS
DRAWN: YPS
CHECKED: RVT

RBF CONSULTING
carollo
IRVINE RANCH WATER DISTRICT

RHONDA V. TIEJERINA REE NO. 15473 ELECTRICAL ENGINEER DATE
CINDY MILLER RCE NO. 58116 PROJECT MANAGER DATE
PATRICIA UEMATSU RCE NO. 36762 PRINCIPAL ENGINEER DATE

IRVINE RANCH WATER DISTRICT
BAKER WATER TREATMENT PLANT
PROJECT NO. 11218

TREATMENT BUILDING
CIP AREA
ELECTRICAL ENLARGED PLAN II

DRAWING E314
SHEET 489 OF 632

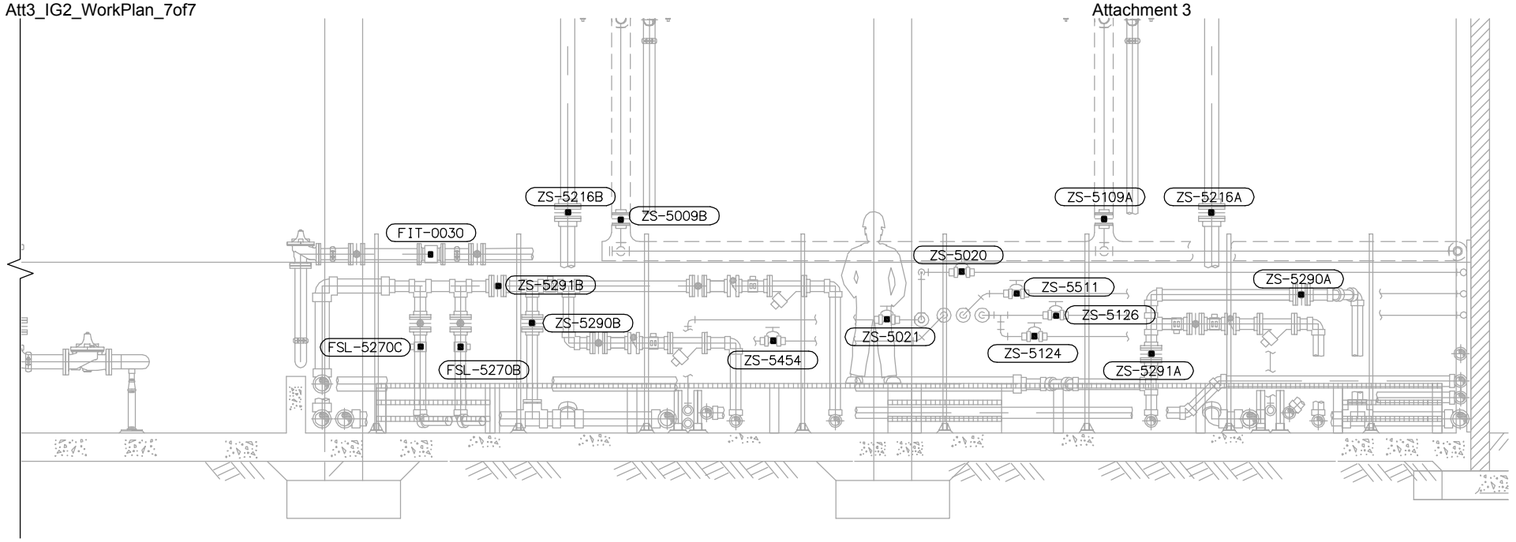

SECTION A E313
SCALE: 3/8" = 1'-0"

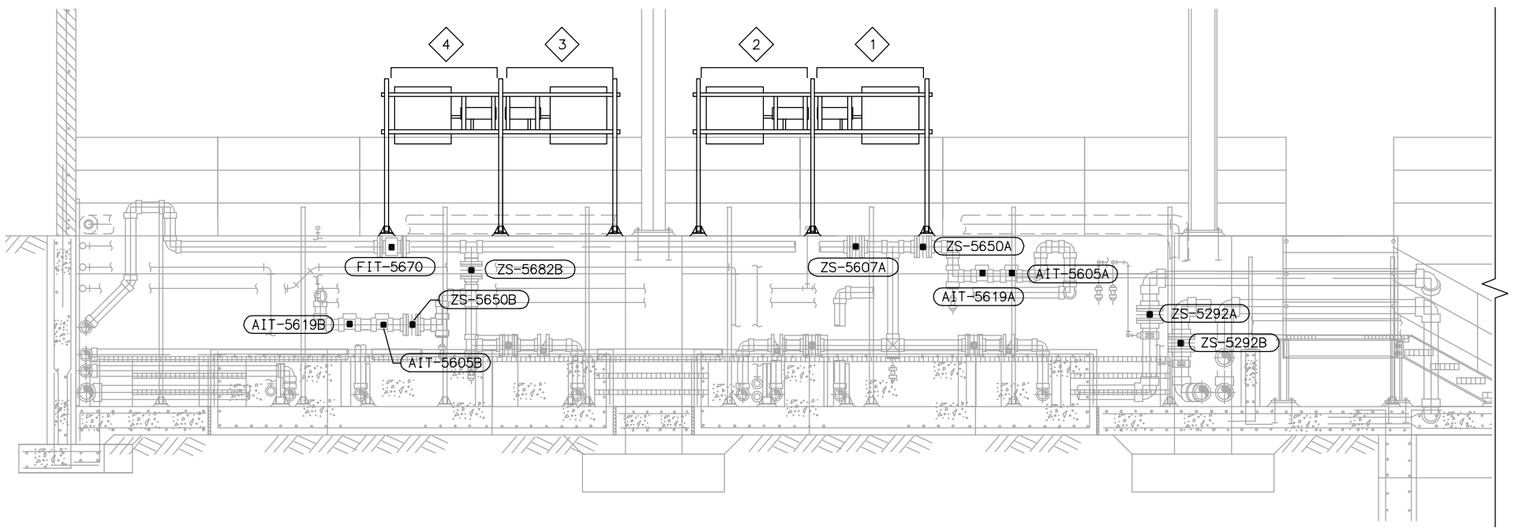

SECTION B E313
SCALE: 3/8" = 1'-0"

NOTES:

1. CAUSTIC CHLORINE SYSTEM POWER PANEL AND SOLENOID VALVE & I/O MANIFOLD. SEE DWG E315 FOR DETAILS
2. CAUSTIC CIRCULATION PUMP SYSTEM POWER PANEL AND SOLENOID VALVE & I/O MANIFOLD. SEE DWG E315 FOR DETAILS
3. CIP CITRIC ACID SYSTEM POWER PANEL AND SOLENOID VALVE & I/O MANIFOLD. SEE DWG E315 FOR DETAILS
4. CIP CITRIC ACID CIRCULATION POWER PANEL AND SOLENOID VALVE & I/O MANIFOLD. SEE DWG E315 FOR DETAILS
5. FILTRATION SUPPLIER TO PROVIDE LIMIT SWITCHES AND WIRING. CONTRACTOR TO INSTALL WIRING TO I/O MANIFOLD PER MANUFACTURER RECOMMENDATION. SEE DWG E313 FOR DETAILS

LAST SAVED BY: ypsee LAST UPDATED: 01/18/2012 11:21 AM FILENAME: 6232-E315.dwg

No.	DATE	REVISIONS	APPROVED

DESIGNED: YPS
DRAWN: YPS
CHECKED: RVT

RBF CONSULTING

carollo

IRVINE RANCH WATER DISTRICT

RHONDA V. TIEJERINA REE NO. 15473 ELECTRICAL ENGINEER DATE
CINDY MILLER RCE NO. 58116 PROJECT MANAGER DATE
PATRICIA UEMATSU RCE NO. 36762 PRINCIPAL ENGINEER DATE

IRVINE RANCH WATER DISTRICT
BAKER WATER TREATMENT PLANT
PROJECT NO. 11218

TREATMENT BUILDING CIP AREA SECTION PLAN

DRAWING **E315**

SHEET **490** OF **632**

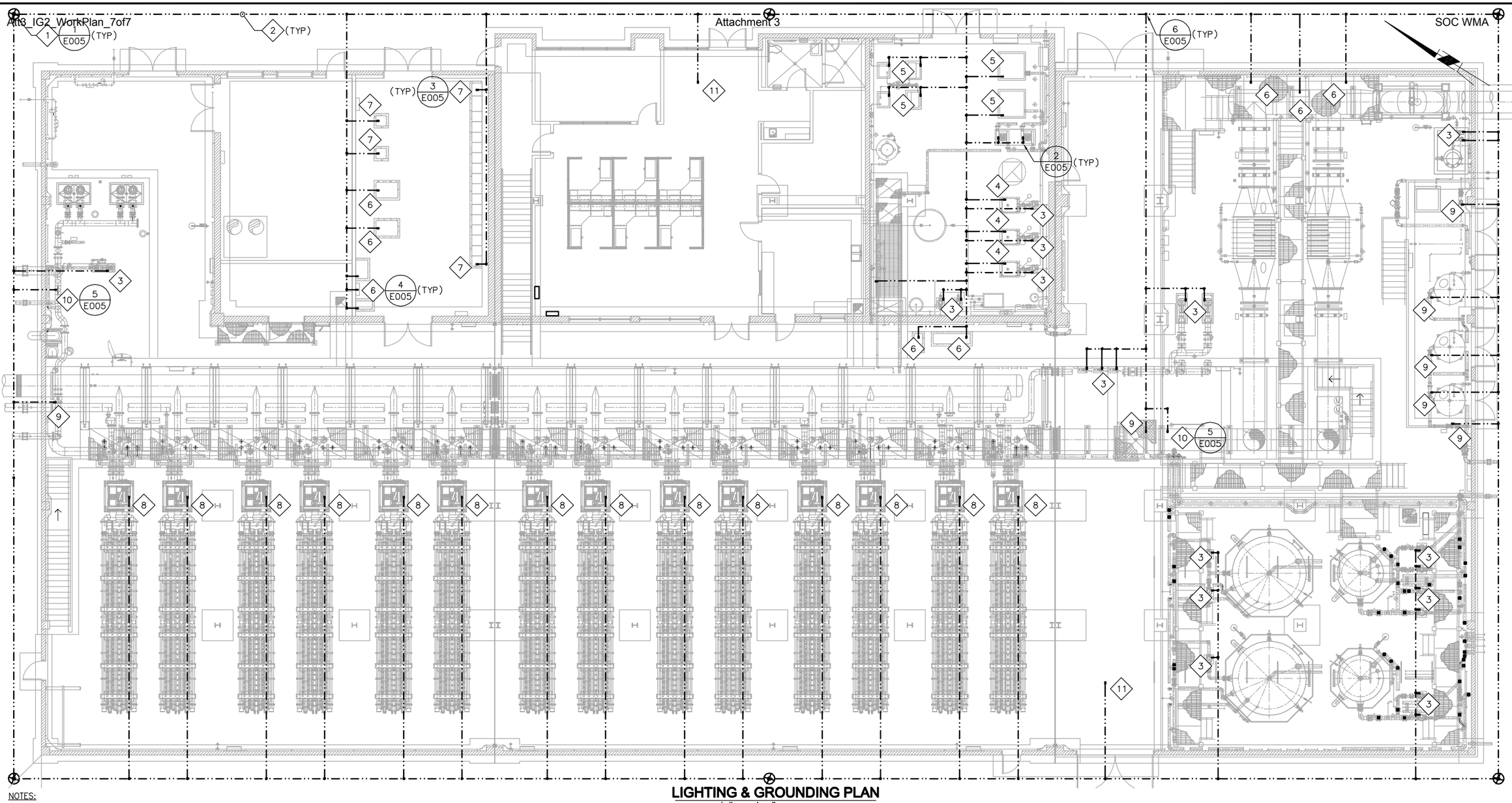

LIGHTING & GROUNDING PLAN

SCALE: 1/8" = 1'-0"

NOTES:

1. PROVIDE A CAST IRON LID FOR GROUND ROD WELLS.
2. #4/0 BARE COPPER GROUNDING CONDUCTOR.
3. ROUTE #4/0 GROUNDING WIRE THROUGH SLAB AND CONNECT TO MOTOR FRAMES.
4. ROUTE #4/0 GROUNDING WIRE THROUGH SLAB AND CONNECT TO BOILERS.
5. ROUTE #4/0 GROUNDING WIRE THROUGH SLAB AND CONNECT TO M-6038A, M-6038B, AC-3001A, AC-6001B, M-6002A & M-6002A.
6. ROUTE #4/0 GROUNDING WIRE THROUGH SLAB AND CONNECT TO CONTROL PANELS & UPS.
7. ROUTE #4/0 GROUND WIRE THROUGH SLAB AND CONNECT TO MCC-300 & ISOLATION TRANSFORMERS.
8. ROUTE #2 GROUNDING WIRE THROUGH SLAB AND CONNECT TO MF FEED RACK REMOTE I/O PANEL.
9. ROUTE #2 GROUNDING WIRE AND CONNECT TO EACH FLOWMETER GROUND RING PER MANUFACTURER'S INSTRUCTIONS.
10. ROUTE #4/0 GROUNDING WIRE AND CONNECT TO PIPING SYSTEM.
11. ROUTE 4#0 GROUNDING WIRE AND CONNECT TO STRUCTURAL REBAR.

No.	DATE	REVISIONS	APPROVED

DESIGNED: YPS
DRAWN: YPS
CHECKED: RVT

RBF CONSULTING

carollo

IRVINE RANCH WATER DISTRICT

RHONDA V. TIEJERINA	REE NO. 15473	ELECTRICAL ENGINEER	DATE
CINDY MILLER	RCE NO. 58116	PROJECT MANAGER	DATE
PATRICIA UEMATSU	RCE NO. 36762	PRINCIPAL ENGINEER	DATE

IRVINE RANCH WATER DISTRICT
BAKER WATER TREATMENT PLANT
PROJECT NO. 11218

TREATMENT BUILDING GROUNDING PLAN

DRAWING E316

SHEET 491 OF 632

LAST SAVED BY: ypsee LAST UPDATED: 01/18/2012 11:23 AM FILENAME: 6232-E316.dwg

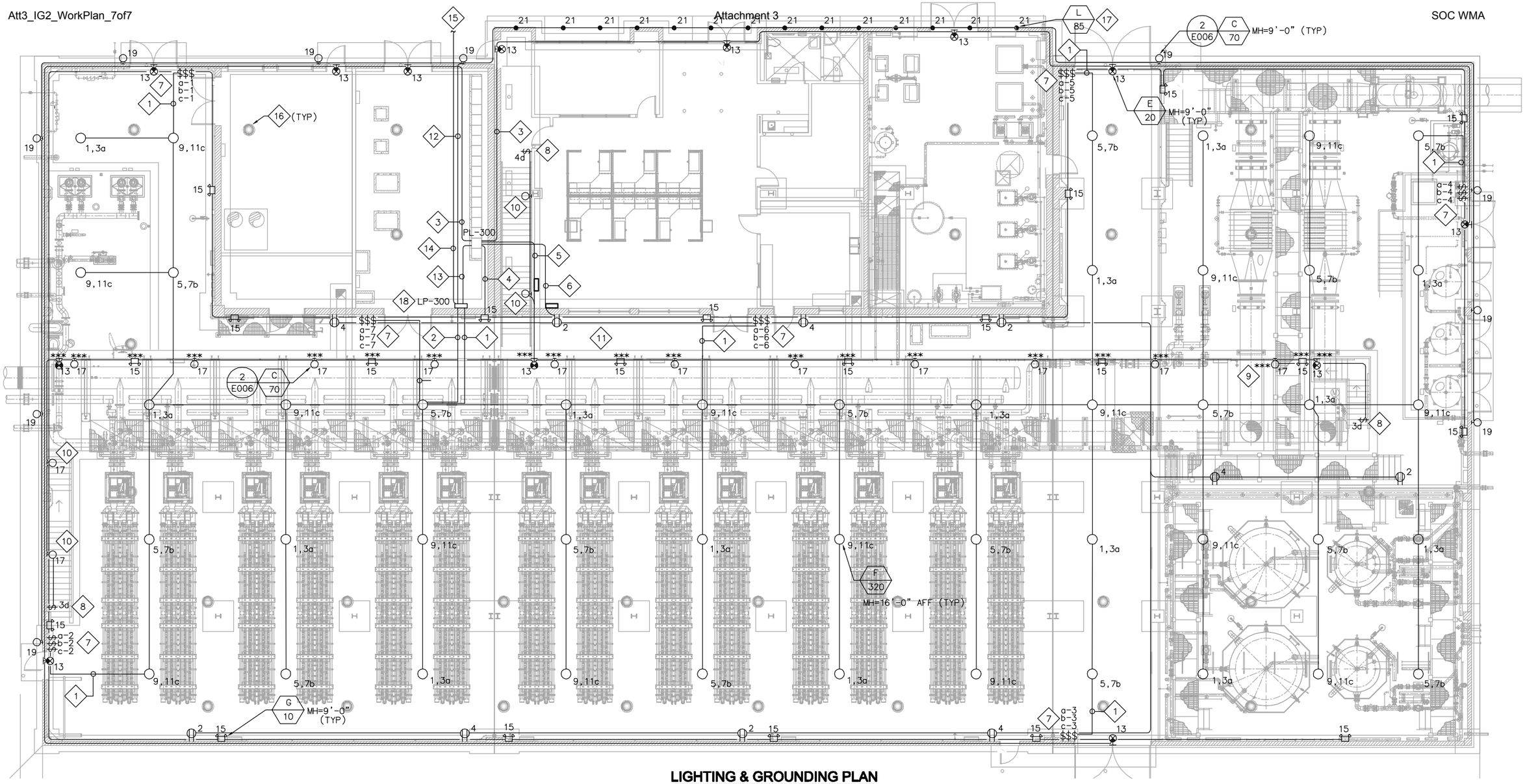

LIGHTING & GROUNDING PLAN

SCALE: 1/8" = 1'-0"

NOTES:

1. 1"C - 9#10, 1#10G TO LIGHT SWITCHES.
2. 1"C - 6#10, 1#10G TO LIGHT FIXTURES (FIXTURE F)
3. 1"C - 2#10, 1#10G TO EXIT LIGHTS
4. 1"C - 2#10, 1#10G TO EMERGENCY LIGHTS
5. 1"C - 6#10, 1#10G TO EXIT LIGHTS, EMERGENCY LIGHTS, WALLPACK LIGHT IN PIPING TRENCH AND STAIRWAY.
6. 1"C - 4#10, 1#10G TO RECEPTACLES
7. PROVIDE MOMENTARY CENTER OFF LIGHT SWITCHES. SEE DWG E022 FOR CONNECTION DIAGRAM.
8. WALLPACK LIGHTS SWITCH.
9. INSTALL WALLPACK LIGHTS, EMERGENCY LIGHTS AND EXIT LIGHTS BELOW GRATING (IN PIPING TRENCH) AS SHOWN. ALL LIGHTS SHALL BE INSTALL 8'-0" AFF. ALL LIGHTS IN PIPING TRENCH ARE DENOTED WITH "***".
10. INSTALL WALLPACK LIGHTS ALONG STAIRWAY AS SHOWN.
11. ALL LIGHTS (EXIT, EMERGENCY, HIGH BAY, WALLPACK) & RECEPTACLES SHALL BE POWERED FROM PL-300. CONDUIT ROUTING SHOWN ARE DIAGRAMMATIC AND FOR REFERENCE ONLY. CONTRACTOR TO PROVIDE AND INSTALL A WORKABLE LIGHTING & RECEPTACLE SYSTEM AS SHOWN.
12. 1"C - 4#10, 1#10G TO EXTERIOR LIGHTS AND CANOPY LIGHTS.
13. 2"C - 14#10, 1#10G FROM PL-300 TO LP-300.
14. 1"C - 6#6, 1#6G TO PERIMETER LIGHTS ZONE 3 ZONE 4 & ZONE 5
15. SEE DWG E010 FOR PERIMETER LIGHTS ZONE 3, 4 & 5 LOCATION.
16. SOLAR TUBE. SEE DWG A303 DOE DETAILS.
17. RECESS CANOPY LIGHTS. SEE DWG E023 FOR CONTROL DIAGRAM.
18. SEE DWG E022 FOR CONNECTION DIAGRAM DETAILS.

No.	DATE	REVISIONS	APPROVED

DESIGNED: YPS
DRAWN: YPS
CHECKED: RVT

RBF CONSULTING

carollo

IRVINE RANCH WATER DISTRICT

RHONDA V. TIEJERINA	REE NO. 15473	ELECTRICAL ENGINEER	DATE
CINDY MILLER	RCE NO. 58116	PROJECT MANAGER	DATE
PATRICIA UEMATSU	RCE NO. 36762	PRINCIPAL ENGINEER	DATE

IRVINE RANCH WATER DISTRICT
BAKER WATER TREATMENT PLANT
PROJECT NO. 11218

TREATMENT BUILDING LIGHTING PLAN 1

DRAWING **E317**

SHEET **492** OF **632**

LAST SAVED BY: ypsee LAST UPDATED: 01/18/2012 11:24 AM FILENAME: 6232-E317.dwg

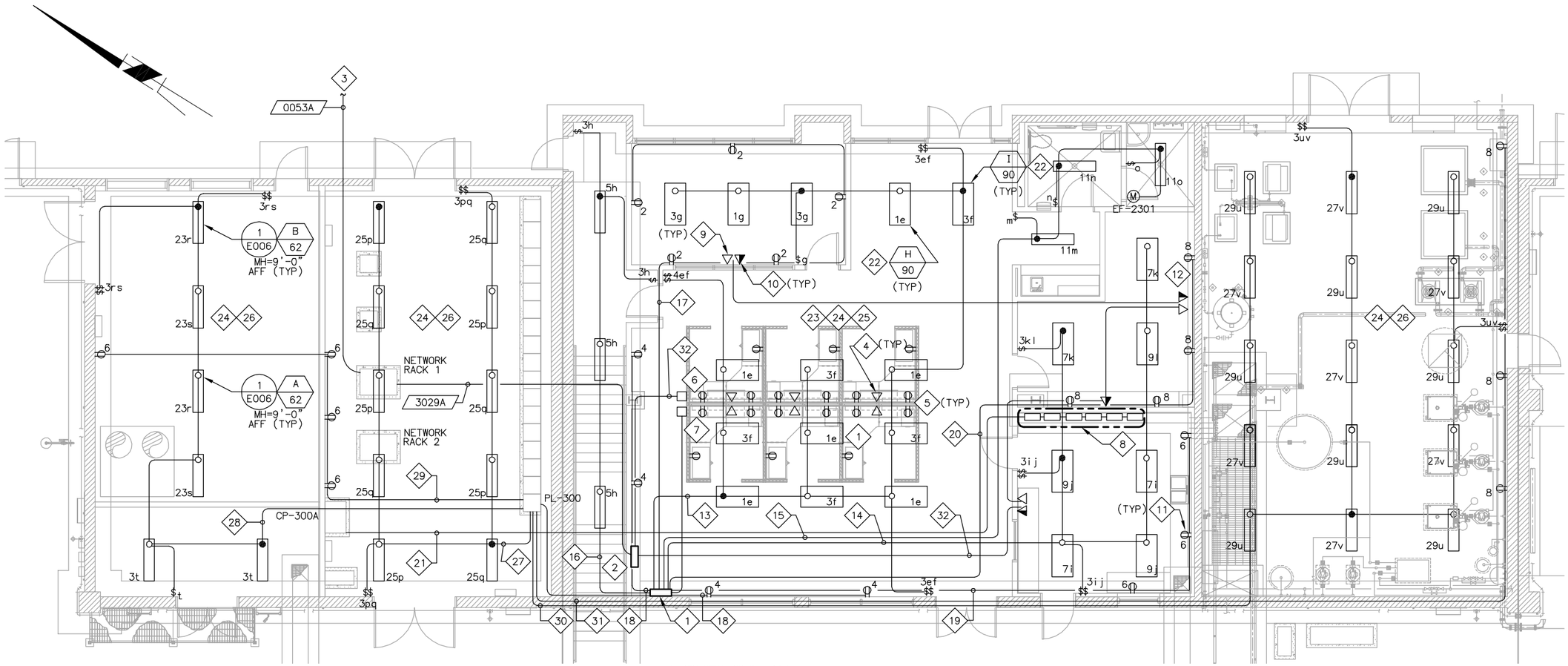

LIGHTING PLAN

SCALE: 3/16" = 1'-0"

NOTES:

1. PL-300-SUB. 120/208V 3PH ELECTRICAL SUB PANEL.
2. CONTRACTOR TO PROVIDE AND INSTALL A 12" X 12" TELECOMMUNICATION PANEL AS SHOWN.
3. TO TELEPOHNE BACKBOARD AT CONSTRUCTION MANAGEMENT BUILDING. SEE DWG E011 FOR CONTINUATION.
4. WORKSTATION (VOICE/DATA) OUTLET FOR SYSTEM FURNITURE. COORDINATE WITH FURNITURE SUPPLIER FOR MOUNTING LOCATION.
5. WORKSTATION RECEPTACLE OUTLET FOR SYSTEM FURNITURE. COORDINATE WITH FURNITURE SUPPLIER FOR MOUNTING LOCATION.
6. VOICE/DATA JUNCTION BOX SHALL BE INSTALLED BASED ON FIELD CONDITIONS. FIELD RELOCATE IF REQUIRES.
7. POWER JUNCTION BOX SHALL BE INSTALLED BASED ON FILED CONDITIONS. FIELD RELOCATE IF REQUIRES.
8. CHEMICAL ANALYZERS. SEE DWG I022 FOR MOUNTING DETAILS.
9. VOICE/DATA OUTLET. WALL MOUNTED AT 18" AFF
10. DATA OUTLET ONLY. WALL MOUNTED AT 18"AFF
11. MOUNT RECEPTACLE AT 12" ABOVE COUNTERTOP.
12. OUTLET FOR FAX AND COPIER.
13. 1"C - 4#10, 1#10G TO OFFICE LIGHTS (CKT #1 & 3)
14. 1"C - 4#10, 1#10G TO LAB LIGHTS (CKT #7 & 9)
15. 1"C - 2#10, 1#10G TO RESTROOM LIGHTS (CKT #11)
16. 1"C - 2#10, 1#10G TO STAIRWAY LIGHTS (CKT #5)
17. 1"C - 4#10, 1#10G TO MEETING ROOM RECEPTACLE (CKT #2)
18. 1"C - 2#10, 1#10G TO OFFICE RECEPTACLE (CKT #4)
19. 1"C - 2#10, 1#10G TO LAB RECEPTACLE (CKT #6)
20. 1"C - 2#10, 1#10G TO FAX/COPIER RECEPTACLE (CKT #8)
21. SEE DWG E309 FOR CONDUIT & WIRING REQUIREMENTS
22. SEE DWG A303 FOR MOUNTING HEIGHT AND DETAILS
23. PROVIDE A COMPLETE OPERATIONAL TELECOMMUNICATIONS SYSTEM INCLUDING, BUT NOT LIMITED TO , ALL NECESSARY RACEWAY, WIRING, TERMINATIONS JACKS, PATCH PANELS, CROSS CONNECT JUMPER CABLE ASSEMBLIES, FACE PLATES, RACKS, ETC. FOR COMPLETE INSTALLATIONS.
24. CONDUIT ROUTING FOR ALL LIGHTS & RECEPTACLES ARE SHOWN DIAGRAMMATIC AND FOR REFERENCE ONLY. CONTRACTOR TO PROVIDE AND INSTALL A WORKABLE LIGHTING & RECEPTACLE SYSTEM AS SHOWN.
24. ALL LIGHTS AND RECEPTACLE IN OFFICE/LAB AREA ARE POWERED FROM PL-300-SUB UNLESS OTHERWISE STATED.
25. ALL LIGHTS AND RECEPTACLE IN OFFICE/LAB AREA ARE POWERED FROM PL-300-SUB UNLESS OTHERWISE STATED ON PLAN.
26. ALL LIGHTS AND RECEPTACLE IN ELECTRICAL ROOM, HVAC ROOM, STORAGE ROOM AND BOILER/AIR COMPRESSOR ROOM AREA ARE POWERED FROM PL-300 UNLESS OTHERWISE STATED ON PLAN.
27. 1"C - 2#10, 1#10G TO ELECTRICAL ROOM LIGHTS (CKT #1, PL-300)
28. 1"C - 2#10, 1#10G TO HVAC & STORGAE ROOM LIGHTS (CKT #3, PL-300)
29. 1"C - 2#10, 1#10G TO ELECTRICAL ROOM & HVAC ROOM RECEPTACLE (CKT #6, PL-300)
30. 1"C - 4#10, 1#10G TO BOILER/AIR COMPRESSOR ROOM LIGHTS (CKT #5, & 7, PL-300)
31. 1"C - 2#10, 1#10G TO BOILER/AIR COMPRESSOR ROOM RECEPTACLE (CKT #8, PL-300)
32. 1"C WITH CAT5e CABLE FOR VOICE & DATA.

FILENAME: 6232-E318.dwg
LAST UPDATED: 01/18/2012 11:25 AM
LAST SAVED BY: ypsee

No.	DATE	REVISIONS	APPROVED

DESIGNED: YPS
DRAWN: YPS
CHECKED: RVT

RBF CONSULTING
carollo
IRVINE RANCH WATER DISTRICT

RHONDA V. TIEJERINA REE NO. 15473 ELECTRICAL ENGINEER DATE
CINDY MILLER RCE NO. 58116 PROJECT MANAGER DATE
PATRICIA UEMATSU RCE NO. 36762 PRINCIPAL ENGINEER DATE

IRVINE RANCH WATER DISTRICT
BAKER WATER TREATMENT PLANT
PROJECT NO. 11218

TREATMENT BUILDING LIGHTING PLAN 2

DRAWING E318
SHEET 493 OF 632

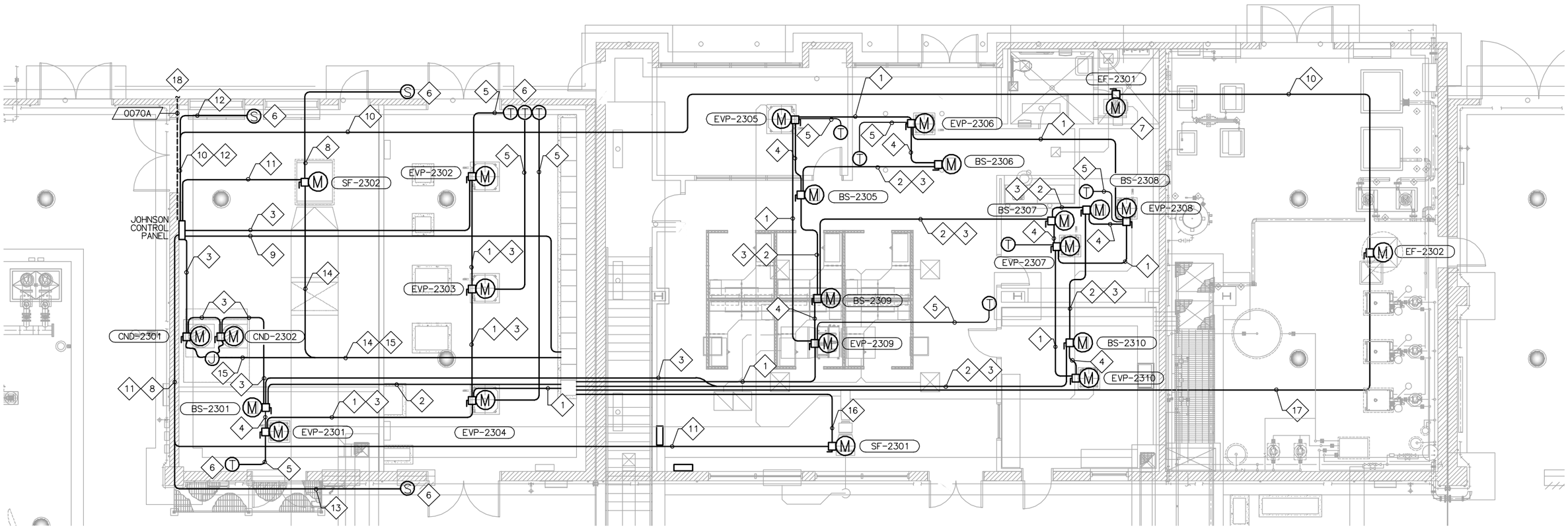

HVAC POWER PLAN

SCALE: 3/16" = 1'-0"

NOTES:

1. 1"C - 2#10, 1#10G FROM PL-300 TO EVPs. SEE DWG H007 FOR SYSTEM WIRING.
2. 1"C - 2#10, 1#10G FROM PL-300 TO BSs. SEE DWG H007 FOR SYSTEM WIRING.
3. 1" CONDUIT ONLY FROM JOHNSON CONTROL PANEL TO BSs, EVPs AND CNDs. SEE DWG H007 FOR NUMBER OF WIRING REQUIRED FOR HVAC EQUIPMENT.
4. 1" CONDUIT ONLY FROM EVPs TO BSs. SEE DWG H007 FOR NUMBER OF WIRING REQUIRED FOR HVAC EQUIPMENT.
5. 1" CONDUIT ONLY FROM EVP TO THERMOSTAT. SEE DWG H007 FOR NUMBER OF WIRING REQUIRED FOR HVAC EQUIPMENT.
6. HVAC SYSTEM THERMOSTAT, TEMPERATURE SENSOR & ACOUSTICAL INTAKE LOUVERS PRESSURE SENSOR. SEE DWG H006 & H007 FOR BLOCK DIAGRAM.
7. FOR EF-2301 CONDUIT ROUTING & CONNECTION, SEE DWG E318 FOR DETAILS.
8. 1" CONDUIT ONLY FROM TEMPERATURE SENSOR TO SF-2302. SEE DWG H007 FOR NUMBER OF WIRING REQUIRED FOR HVAC EQUIPMENT.
9. 1" CONDUIT ONLY FROM JOHNSON CONTROL PANEL TO VFD-SF-2302 IN MCC-300. SEE DWG H006 FOR NUMBER OF WIRING REQUIRED FOR HVAC EQUIPMENT.
10. 1" CONDUIT ONLY FROM JOHNSON CONTROL PANEL TO EF-2301 & EF-2302. SEE DWG H006 FOR NUMBER OF WIRING REQUIRED FOR HVAC EQUIPMENT.
11. 1" CONDUIT ONLY FROM JOHNSON CONTROL PANEL TO SF-2302 & SF-2302. SEE DWG H006 FOR NUMBER OF WIRING REQUIRED FOR HVAC EQUIPMENT.
12. 1" CONDUIT ONLY FROM JOHNSON CONTROL PANEL TO ACOUSTICAL INTAKE LOUVERS PRESSURE SENSOR. SEE DWG H006 FOR NUMBER OF WIRING REQUIRED FOR HVAC EQUIPMENT.
13. 1" CONDUIT ONLY FROM JOHNSON CONTROL PANEL TO MEMBRANE TREATMENT AREA TEMPERATURE SENSOR. SEE DWG H006 FOR NUMBER OF WIRING REQUIRED FOR HVAC EQUIPMENT.
14. 1" - 3#10, 1#10G FROM SF-2302 TO MCC-300 AS SHOWN. CONDUIT 3020P
15. 1"C - 6#10, 1#10G FROM CND-2301 7 CND-2302 TO MCC-300 AS SHOWN. CONDUIT 3018P.
16. 1"C - 2#10, 1#10G FROM SF-2301 TO PL-300.
17. 1"C - 3#10, 1#10G FROM EF-2302 TO MCC-300. CONDUIT 3019P.
18. SEE E011 FOR CONTINUATION.

No.	DATE	REVISIONS	APPROVED

DESIGNED: YPS
DRAWN: YPS
CHECKED: RVT

RBF CONSULTING

carollo

IRVINE RANCH WATER DISTRICT

RHONDA V. TIEJERINA REE NO. 15473 ELECTRICAL ENGINEER DATE
CINDY MILLER RCE NO. 58116 PROJECT MANAGER DATE
PATRICIA UEMATSU RCE NO. 36762 PRINCIPAL ENGINEER DATE

IRVINE RANCH WATER DISTRICT
BAKER WATER TREATMENT PLANT
PROJECT NO. 11218

TREATMENT BUILDING
HVAC & SECURITY PLAN

DRAWING E319
SHEET 494 OF 632

FILENAME: 6232-E319.dwg LAST UPDATED: 01/16/2012 10:49 AM LAST SAVED BY: ypsee

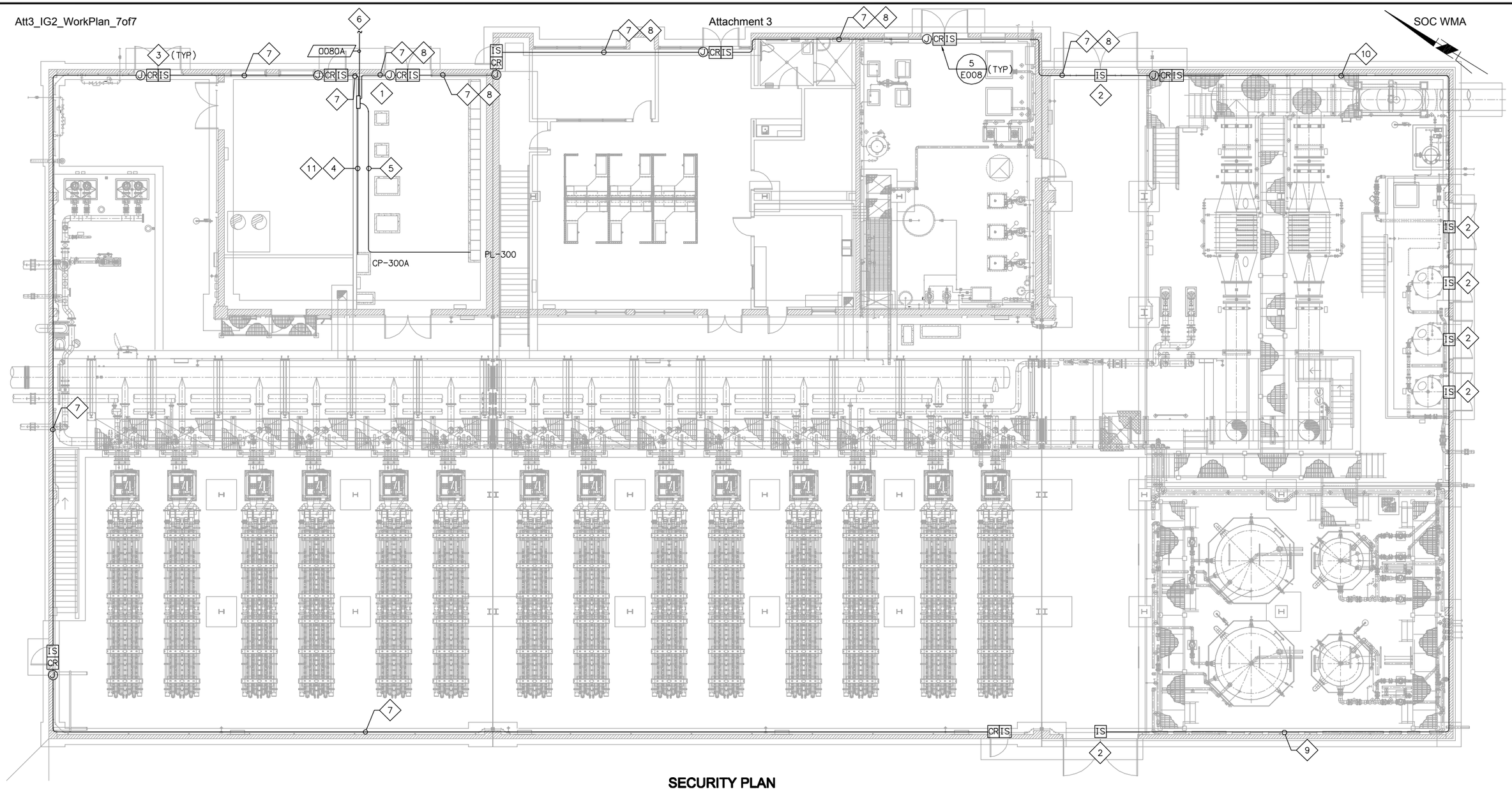

SECURITY PLAN

SCALE: 1/8" = 1'-0"

NOTES:

1. PROVIDE AND INSTALL A SECURITY CONTROL PANEL AS SHOWN. THE SECURITY CONTROL PANEL SHALL CONSISTS OF 2 HIRSCH CONTROLLER. SEE DWG E020 FOR CONTROL BLOCK DIAGRAM.
2. PROVIDE AND INSTALL INTRUSION SWITCH AS SHOWN.
3. HIRSCH DOOR ACCESS MODULE. SEE DWG E020 FOR DETAILS.
4. 1"C - 4#14 (DOOR ALARMS FROM HIRSCH CONTROLLERS) AND 12#14 (FROM INTRUSION SWITCHES) TO CP-300A
5. 1"C - 2#10, 1#10G FROM SECURITY CONTROL PANEL TO PL-300.
6. TO FEED WATER PUMP STATION HIRSCH CONTROLLER. SEE E011 FOR CONTINUATION.
7. 1"C WITH POWER WIRING & 1"C WITH SHIELDED WIRING. SEE DWG E020 FOR WIRE REQUIREMENTS
8. 1"C - 12#14 FROM INTRUSION SWITCHES TO CP-300A (VIA SECURITY CONTROL PANEL)
9. 1"C - 2#14 FOR INTRUSION SWITCH.
10. 1"C - 10#14 FOR INTRUSION SWITCHES.
11. 1"C - DATA LINK FROM HIRSCH CONTROLLER TO CP-300A.

LAST SAVED BY: ypsee LAST UPDATED: 01/18/2012 11:26 AM FILENAME: 6232-E320.dwg

No.	DATE	REVISIONS	APPROVED

DESIGNED: YPS
DRAWN: YPS
CHECKED: RVT

RBF CONSULTING

carollo

IRVINE RANCH WATER DISTRICT

RHONDA V. TIEJERINA REE NO. 15473 ELECTRICAL ENGINEER DATE
CINDY MILLER RCE NO. 58116 PROJECT MANAGER DATE
PATRICIA UEMATSU RCE NO. 36762 PRINCIPAL ENGINEER DATE

IRVINE RANCH WATER DISTRICT
BAKER WATER TREATMENT PLANT
PROJECT NO. 11218

TREATMENT BUILDING SECURITY PLAN

DRAWING E320

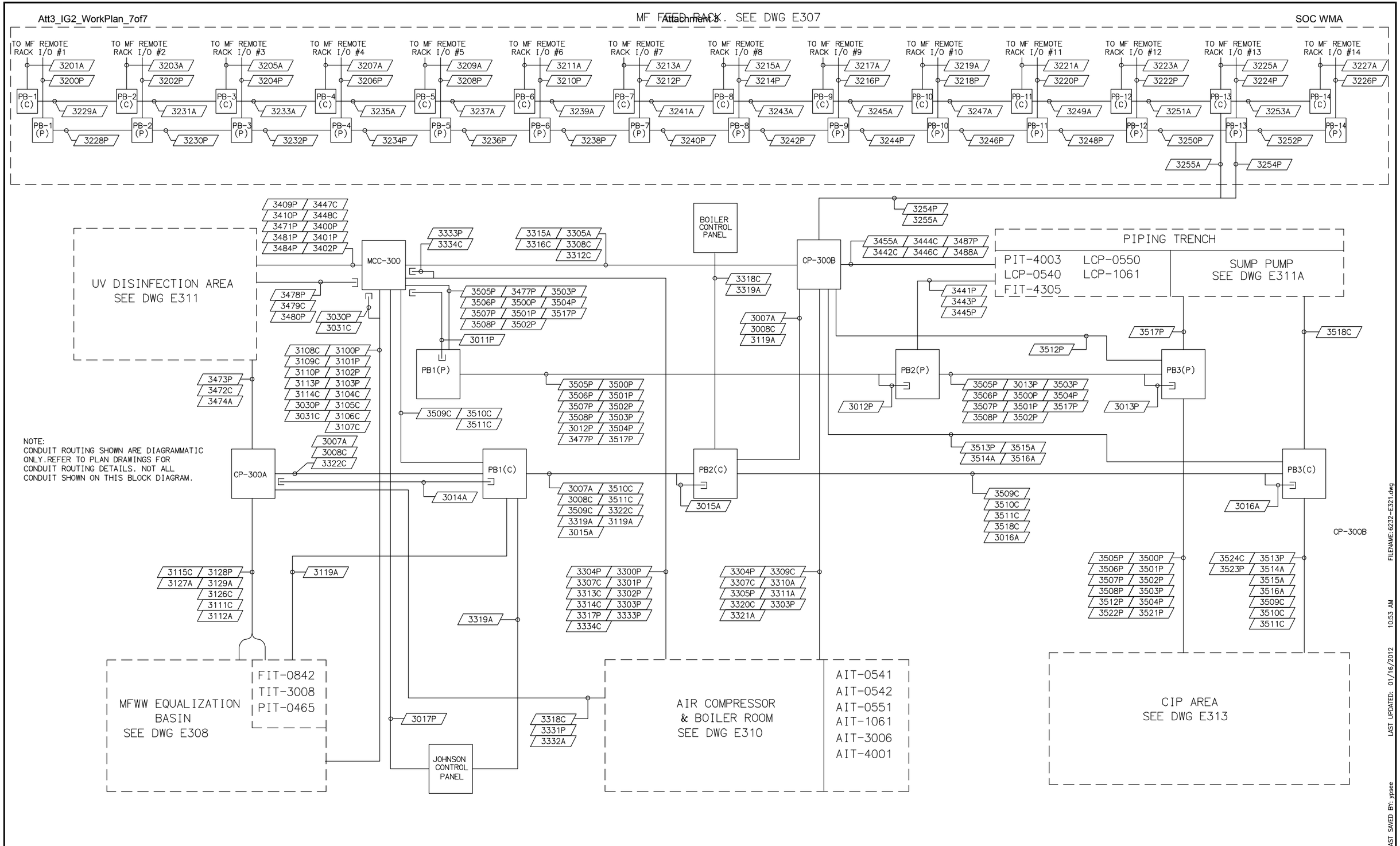

LAST SAVED BY: ypsee
LAST UPDATED: 01/16/2012 10:53 AM
FILENAME: 6232-E321.dwg

No.	DATE	REVISIONS	APPROVED

DESIGNED: YPS
DRAWN: YPS
CHECKED: RVT

RBF CONSULTING
carollo
IRVINE RANCH WATER DISTRICT

RHONDA V. TIEJERINA REE NO. 15473 ELECTRICAL ENGINEER DATE
CINDY MILLER RCE NO. 58116 PROJECT MANAGER DATE
PATRICIA UEMATSU RCE NO. 36762 PRINCIPAL ENGINEER DATE

IRVINE RANCH WATER DISTRICT
BAKER WATER TREATMENT PLANT
PROJECT NO. 11218

TREATMENT BUILDING CONDUIT BLOCK DIAGRAM

DRAWING **E321**
SHEET **496** OF **632**

CONDUIT SCHEDULE

PLAN SYMBOL #	CONDUIT QTY	CONDUIT SIZE	CONDUCTOR QTY.& SIZE	INSULATION RATING	LOCATION FROM	LOCATION TO	LOCATION DWG. NOS	REMARKS
3000P	1	1"	3#10, 1#10G	600V	PL-300	UPS-300A	E309	
3001P	1	1"	2#8, 1#8G		UPS-300A	PL-300-UPS	E309	
3002P	1	1"	2#10, 1#10G		PL-300-UPS	CP-300A	E309	
3003P	1	1"	2#10, 1#10G		PL-300-UPS	NETWORK RACK 1	E309	
3004P	1	1"	2#10, 1#10G		PL-300-UPS	NETWORK RACK 2	E309	
3005P	1	1"	3#8, 1#8G & 2#10		PL-300	UPS-300B	E309,E310	VIA 3477P
3006P	1	1"	3#8, 1#8G & 2#10		UPS-300B	CP-300B	E310	
3007A	1	2"	DATA LINK		CP-300A	CP-300B	E309,E310	
3008C	1	2"	CONDUIT ONLY		CP-300A	CP-300B	E309,E310	
3009A	1	2"	DATA LINK		CP-300A	NETWORK RACK 1	E309	
3010A	1	2"	DATA LINK		CP-300A	NETWORK RACK 2	E309	
3011P	1	2"	CONDUIT ONLY		ELECTRICAL ROOM	PB1(P)	E309	SPARE
3012P	1	2"	CONDUIT ONLY		PB1(P)	PB2(P)	E309,E310	SPARE
3013P	1	2"	CONDUIT ONLY		PB2(P)	PB3(P)	E310,E311	SPARE
3014A	1	2"	CONDUIT ONLY		ELECTRICAL ROOM	PB1(C)	E309	SPARE
3015A	1	2"	CONDUIT ONLY		PB1(C)	PB2(C)	E309,E310	SPARE
3016A	1	2"	CONDUIT ONLY		PB2(C)	PB3(C)	E310,E311	SPARE
3017P	1	1"	2#10, 1#10G		PL-300	JOHNSON CONTROL PANEL	E308,E309	
3018P	1	1"	6#10, 1#10G		MCC-300	03-HVAC-CND-2301, -2302	E319	
3019P	1	1"	3#10, 1#10G		MCC-300	03-HVAC-EF-2302	E319	
3020P	1	1"	3#10, 1#10G		MCC-300	03-HVAC-SF-2302	E319	
3021P	1	1"	2#10, 1#10G		CP-300A	ANETNNA TOWER	E011,E305,E309	
3022A	1	3"	DATA LINK		CP-300A	ANETNNA TOWER	E011,E305,E309	
3023A	1	3"	DATA LINK		CP-300A	ANETNNA TOWER	E011,E305,E309	
3024C	1	1"	2#14, 2#14 SPARE		MCC-300 (POWER MONITOR)	CP-300A	E309	
3025A	1	2"	DATA LINK		MCC-300 (POWER MONITOR)	CP-300A	E309	
3026P	1	2"	2#10, 1#10G		PL-300	CP-300A	E309	
3027C	1	1"	4#14, 6#14 SPARE		UPS-300A	CP-300A	E309	
3028C	1	1"	4#14, 6#14 SPARE		UPS-300B	CP-300A	E309	
3029A	1	2"	CONDUIT ONLY		NETWORK RACK 1	TELECOMMUNICATION PANEL	E318	
3050P	1	1"	6#10, 1#10G		CP-300A	CT BASIN 04-FLW-LIT-0527, -LIT-0529,-LIT-0530	E011,E305,E309 E401	VIA PB-1
3051A	1	1"	3(2/C#16) SHLD		CP-300A	CT BASIN 04-FLW-LIT-0527, -LIT-0529,-LIT-0530	E011,E305,E309 E401	VIA PB-2
3052C	1	1"	16#14		CP-300A	CT BASIN INTRUSION SWITCHES	E011,E305,E309 E401	VIA PB-2
3053C	1	1"	2#14		CP-300A	CT BASIN LSH-0555	E011,E305,E309 E401	VIA PB-2
3054P	1	1"	6#10, 1#10G		PL-300	CT BASIN RECEPTACLE & LIGHT	E011,E305,E309 E401	VIA PB-1
3055P	1	2"	CONDUIT ONLY		ELECTRICAL ROOM	PB-1	E011,E305,E309 E401	SPARE
3056A	1	2"	CONDUIT ONLY		CP-300A	PB-2	E011,E305,E309 E401	SPARE
3100P	1	1"	3#10, 1#10G		06-MFWW-VFD-0810 (MCC-300)	06-MFWW-P-0810	E301,E308,E309	
3101P	1	1"	3#10, 1#10G		06-MFWW-VFD-0820 (MCC-300)	06-MFWW-P-0820	E301,E308,E309	
3102P	1	1"	3#10, 1#10G		06-MFWW-VFD-0830 (MCC-300)	06-MFWW-P-0830	E301,E308,E309	
3103P	1	1"	3#10, 1#10G		06-MFWW-VFD-0840 (MCC-300)	06-MFWW-P-0840	E301,E308,E309	
3104C	1	1"	4#14		06-MFWW-VFD-0810 (MCC-300)	06-MFWW-P-0810, LOS	E301,E308,E309	TSH, LOS
3105C	1	1"	4#14		06-MFWW-VFD-0820 (MCC-300)	06-MFWW-P-0820, LOS	E301,E308,E309	TSH, LOS

CONDUIT NUMBERING SCHEME	CONDUIT ABBREVIATIONS
AREA NUMBER — 3 001 P — CONDUIT ABBREVIATION; CONDUIT NUMBER	P = POWER C = CONTROL A = SIGNAL F = FIBER OPTIC

CONDUIT SCHEDULE

PLAN SYMBOL #	CONDUIT QTY	CONDUIT SIZE	CONDUCTOR QTY.& SIZE	INSULATION RATING	LOCATION FROM	LOCATION TO	LOCATION DWG. NOS	REMARKS
3106C	1	1"	4#14	600V	06-MFWW-VFD-0830 (MCC-300)	06-MFWW-P-0830, LOS	E301,E308,E309	TSH, LOS
3107C	1	1"	4#14		06-MFWW-VFD-0840 (MCC-300)	06-MFWW-P-0840, LOS	E301,E308,E309	TSH, LOS
3108C	1	1"	4#14		06-MFWW-PSHL-0810 & -0820	06-MFWW-VFD-0810 & -0820	E308,E309	VIA JUNCTION BOX
3109C	1	1"	4#14		06-MFWW-PSHL-0830 & -0840	06-MFWW-VFD-0830 & -0840	E308,E309	VIA JUNCTION BOX
3110P	1	1"	3#10, 1#10G		06-MFWW-MOV-0802	MCC-300	E301,E308,E309	
3111C	1	1"	10#14, 2#14 SPARE		06-MFWW-MOV-0802	CP-300A	E308,E309	
3112A	1	1"	2(2/C#16) SHLD		06-MFWW-MOV-0802	CP-300A	E308,E309	
3113P	1	1"	3#10, 1#10G		MCC-300	06-MFWW-P-0860	E301,E308,E309	
3114C	1	1"	12#14		JUNCTION BOX	MCC-300	E308,E309	TSH,PSHL,HTR,SOV,FSL
3116A	1	1"	MSC		06-MFWW-PE-0465	06-MFWW-PIT-0465	E308	VIA JUNCTION BOX
3117A	1	1"	MSC		06-MFWW-TE-3008	06-MFWW-TIT-3008	E308	VIA JUNCTION BOX
3118A	1	1"	MSC		06-MFWW-FE-0842	06-MFWW-FIT-0842	E308	VIA JUNCTION BOX
3119A	1	1"	2(2/C#16) SHLD		JUNCTION BOX	CP-300B	E308,E309	06-MFWW-PIT-0465 06-MFWW-TIT-3008
3120C	1	2"	28#14, 8#14 SPARE		06-MFWW-VFD-0810 & -0820	CP-300A	E309	
3121A	1	2"	4(2/C#16) SHLD		06-MFWW-VFD-0810 & -0820	CP-300A	E309	
3122A	1	2"	2(DATA LINK)		06-MFWW-VFD-0810 & -0820	CP-300A	E309	
3123C	1	2"	28#14, 8#14 SPARE		06-MFWW-VFD-0830 & -0840	CP-300A	E309	
3124A	1	2"	4(2/C#16) SHLD		06-MFWW-VFD-0830 & -0840	CP-300A	E309	
3125A	1	2"	2(DATA LINK)		06-MFWW-VFD-0830 & -0840	CP-300A	E309	
3126C	1	1"	4#14		06-MFWW-LSH-0805 & -LSLL-0800	CP-300A	E308,E309	
3127A	1	1"	(2/C#16) SHLD		06-MFWW-LIT-0801	CP-300A	E308,E309	
3128P	1	1"	2#10, 1#10G		06-MFWW-FIT-0842	CP-300A	E308,E309	
3129A	1	1"	(2/C#16) SHLD		06-MFWW-FIT-0842	CP-300A	E308,E309	
3130P	1	2"	CONDUIT ONLY		MFWW AREA	ELECTRICAL ROOM	E308,E309	SPARE
3131C	1	2"	CONDUIT ONLY		MFWW AREA	ELECTRICAL ROOM	E308,E309	SPARE
3132P	1	1"	2#10, 1#10G		06-MFWW-LIT-0801	CP-300A	E308,E309	
3133C	1	1"	10#14, 4#14 SPARE		MCC-300 (06-MFWW-P-0860 STR)	CP-300A	E309	
3200P	1	2"	2#12, 1#12G		RACK 1	PB-1(P)	E305	
3201A	1	2"	DATA LINK		RACK 1	PB-1(A)	E305	
3202P	1	2"	2#12, 1#12G		RACK 2	PB-2(P)	E305	
3203A	1	2"	DATA LINK		RACK 2	PB-2(A)	E305	
3204P	1	2"	2#12, 1#12G		RACK 3	PB-3(P)	E305	
3205A	1	2"	DATA LINK		RACK 3	PB-3(A)	E305	
3206P	1	2"	2#12, 1#12G		RACK 4	PB-4(P)	E305	
3207A	1	2"	DATA LINK		RACK 4	PB-4(A)	E305	
3208P	1	2"	2#12, 1#12G		RACK 5	PB-5(P)	E305	
3209A	1	2"	DATA LINK		RACK 5	PB-5(A)	E305	
3210P	1	2"	2#12, 1#12G		RACK 6	PB-6(P)	E305	
3211A	1	2"	DATA LINK		RACK 6	PB-6(A)	E305	
3212P	1	2"	2#12, 1#12G		RACK 7	PB-7(P)	E305	
3213A	1	2"	DATA LINK		RACK 7	PB-7(A)	E305	
3214P	1	2"	2#12, 1#12G		RACK 8	PB-8(P)	E305	
3215A	1	2"	DATA LINK		RACK 8	PB-8(A)	E305	
3216P	1	2"	2#12, 1#12G		RACK 9	PB-9(P)	E305	
3217A	1	2"	DATA LINK		RACK 9	PB-9(A)	E305	
3218P	1	2"	2#12, 1#12G		RACK 10	PB-10(P)	E305	
3219A	1	2"	DATA LINK		RACK 10	PB-10(A)	E305	
3220P	1	2"	2#12, 1#12G		RACK 11	PB-11(P)	E305,E310	
3221A	1	2"	DATA LINK		RACK 11	PB-11(A)	E305,E310	
3222P	1	2"	2#12, 1#12G		RACK 12	PB-12(P)	E305,E310	
3223A	1	2"	DATA LINK		RACK 12	PB-12(A)	E305,E310	
3224P	1	2"	2#12, 1#12G		RACK 13	PB-13(P)	E305,E310	
3225A	1	2"	DATA LINK		RACK 13	PB-13(A)	E305,E310	

FILENAME: 6232-E322.dwg LAST UPDATED: 01/18/2012 11:28 AM LAST SAVED BY: ypsee

No.	DATE	REVISIONS	APPROVED

DESIGNED: YPS
DRAWN: YPS
CHECKED: RVT

RBF CONSULTING

carollo

IRVINE RANCH WATER DISTRICT

RHONDA V. TIEJERINA REE NO. 15473 ELECTRICAL ENGINEER DATE
CINDY MILLER RCE NO. 58116 PROJECT MANAGER DATE
PATRICIA UEMATSU RCE NO. 36762 PRINCIPAL ENGINEER DATE

IRVINE RANCH WATER DISTRICT
BAKER WATER TREATMENT PLANT
PROJECT NO. 11218

TREATMENT BUILDING
CONDUIT & CABLE SCHEDULES I

DRAWING E322

CONDUIT SCHEDULE

PLAN SYMBOL #	CONDUIT QTY	CONDUIT SIZE	CONDUCTOR QTY.& SIZE	CONDUCTOR INSULATION RATING	LOCATION FROM	LOCATION TO	LOCATION DWG. NOS	REMARKS
3226P	1	2"	2#12, 1#12G	600V	RACK 14	PB-14(P)	E305	
3227A	1	2"	DATA LINK		RACK 14	PB-14(A)	E305	
3228P	1	1"	2#12, 1#12G		PB-1(P)	PB-2(P)	E305	
3229A	1	2"	DATA LINK		PB-1(A)	PB-2(A)	E305	
3230P	1	1"	4#12, 1#12G		PB-2(P)	PB-3(P)	E305	
3231A	1	2"	2(DATA LINK)		PB-2(A)	PB-3(A)	E305	
3232P	1	1"	6#12, 1#12G		PB-3(P)	PB-4(P)	E305	
3233A	1	2"	3(DATA LINK)		PB-3(A)	PB-4(A)	E305	
3234P	1	1"	8#12, 1#12G		PB-4(P)	PB-5(P)	E305	
3235A	1	2"	4(DATA LINK)		PB-4(A)	PB-5(A)	E305	
3236P	1	1"	12#12, 1#12G		PB-5(P)	PB-6(P)	E305	
3237A	1	2"	5(DATA LINK)		PB-5(A)	PB-6(A)	E305	
3238P	1	1"	12#12, 1#12G		PB-6(P)	PB-7(P)	E305	
3239A	1	2"	6(DATA LINK)		PB-6(A)	PB-7(A)	E305	
3240P	1	1"	14#12, 1#12G		PB-7(P)	PB-8(P)	E305	
3241A	1	2"	7(DATA LINK)		PB-7(A)	PB-8(A)	E305	
3242P	1	1"	16#12, 1#12G		PB-8(P)	PB-9(P)	E305	
3243A	1	2"	8(DATA LINK)		PB-8(A)	PB-9(A)	E305	
3244P	1	1"	18#12, 1#12G		PB-9(P)	PB-10(P)	E305	
3245A	1	2"	9(DATA LINK)		PB-9(A)	PB-10(A)	E305	
3246P	1	1"	20#12, 1#12G		PB-10(P)	PB-11(P)	E305,E310	
3247A	1	2"	10(DATA LINK)		PB-10(A)	PB-11(A)	E305,E310	
3248P	1	2"	22#12, 1#12G		PB-11(P)	PB-12(P)	E305,E310	
3249A	1	2"	11(DATA LINK)		PB-11(A)	PB-12(A)	E305,E310	
3250P	1	2"	24#12, 1#12G		PB-12(P)	PB-13(P)	E305,E310	
3251A	1	2"	12(DATA LINK)		PB-12(A)	PB-13(A)	E305,E310	
3252P	1	1"	2#12, 1#12G		PB-14(P)	PB-13(P)	E305,E310	
3253A	1	2"	DATA LINK		PB-14(A)	PB-13(A)	E305,E310	
3254P	1	2"	28#12, 1#12G		PB-13(P)	CP-300B	E305,E310	
3255A	1	2"	14(DATA LINK)		PB-13(A)	CP-300B	E305,E310	
3300P	1	2"	3#2, 1#2G		VFD-6039A (MCC-300)	M-6039A	E301,E309,E310	
3301P	1	2"	3#2, 1#2G		VFD-6039B (MCC-300)	M-6039B	E301,E309,E310	
3302P	1	1"	3#10, 1#10G		MCC-300	M-6038A	E301,E309,E310	
3303P	1	1"	3#10, 1#10G		MCC-300	M-6038B	E301,E309,E310	
3304P	1	1"	6#10, 1#10G		MCC-300	AC-6001A, AC-6001B	E301,E309,E310	
3305A	1	1"	2(2/C#16) SHLD		VFD-6039A (MCC-300)	CP-300B	E309,E310	
3306P	1	1"	4#10, 1#10G		PL-300	M-6002A & M-6002B	E309,E310	
3307C	1	1"	8#14		M-6038A & M-6038B	MCC-300	E309,E310	
3308C	1	1"	16#16		M-6038A & M-6038B (MCC-300)	CP-300B	E309,E310	
3309C	1	1"	12#16		AC-6001A & AC-6001B (VCP)	CP-300B	E310	
3310A	1	1"	(2/C#18)&(3/C#18)SHLD, 2#14		AIT-6009 & PIT-6011	CP-300B	E310	
3311A	1	2"	2(2/C#18) SHLD, MSC		PIT-6096, TIT-6097, FIT-6035	CP-300B	E310	
3312C	1	1"	10#14, 2#14 SPARE		VFD-6039A (MCC-300)	CP-300B	E309,E310	
3313C	1	1"	4#14		MCC-300 (VFD-6039A)	M-6039A	E309,E310	

CONDUIT NUMBERING SCHEME	CONDUIT ABBREVIATIONS
AREA NUMBER — 3 001 P — CONDUIT ABBREVIATION; CONDUIT NUMBER	P = POWER C = CONTROL A = SIGNAL F = FIBER OPTIC

CONDUIT SCHEDULE

PLAN SYMBOL #	CONDUIT QTY	CONDUIT SIZE	CONDUCTOR QTY.& SIZE	CONDUCTOR INSULATION RATING	LOCATION FROM	LOCATION TO	LOCATION DWG. NOS	REMARKS
3314C	1	1"	4#14	600V	MCC-300 (VFD-6039B)	M-6039B	E309,E310	
3315A	1	1"	2(2/C#16) SHLD		MCC-300 (VFD-6039B)	CP-300B	E309,E310	
3316C	1	1"	10#14, 2#14 SPARE		MCC-300 (VFD-6039B)	CP-300B	E309,E310	
3317P	1	1"	3#4, 1#4G		MCC-300	BOILER CONTROL PANEL	E309,E310	
3318C	1	1"	2#14		CP-300A	BOILER CONTROL PANEL	E309,E310	VIA 3322C
3319A	1	1"	DATA LINK		JOHNSON CONTROL PANEL	BOILER CONTROL PANEL	E308,E309,E310	
3320C	1	1"	2#14		CP-300B	BOILER CONTROL PANEL	E310	
3321A	1	2"	CONDUIT ONLY		CP-300B	BOILER CONTROL PANEL	E310	
3322C	1	1"	8#14, 6#14 SPARE		CP-300A	PB2(C)	E309,E310	3318C,3518C,3028C
3323P	1	1"	3#10, 1#10G		O3-HVAC-P-2301	BOILER CONTROL PANEL	E310	
3324P	1	1"	3#10, 1#10G		O3-HVAC-P-2302	BOILER CONTROL PANEL	E310	
3325P	1	1"	3#10, 1#10G		O3-HVAC-P-2303	BOILER CONTROL PANEL	E310	
3326C	1	1"	CONDUIT ONLY		O3-HVAC-BOL-2301	BOILER CONTROL PANEL	E310	
3327C	1	1"	CONDUIT ONLY		O3-HVAC-BOL-2302	BOILER CONTROL PANEL	E310	
3328C	1	1"	CONDUIT ONLY		O3-HVAC-BOL-2303	BOILER CONTROL PANEL	E310	
3329A	1	1"	(2/C#16) SHLD		O3-HVAC-TIT-2306	BOILER CONTROL PANEL	E310	
3330A	1	1"	4(2/C#16) SHLD		O3-HVAC-TIT-2301,-2302,-2303,-2304	BOILER CONTROL PANEL	E310	
3331P	1	2"	12#10, 1#10G		ANALYZERS	CP-300A	E309,E310	
3332A	1	2"	7(2/C#16) SHLD		ANALYZERS	CP-300A	E310	
3333P	1	2"	CONDUIT ONLY		BOILER ROOM	ELECTRICAL ROOM	E309,E310	SPARE
3334C	1	2"	CONDUIT PNLY		BOILER ROOM	ELECTRICAL ROOM	E309,E310	SPARE
3335P	1	1"	6#10. 1#10G		PL-300	O3-HVAC-BOL-2301,-2302,-2303	E309,E310	
3336A	1	1"	4(2/C#16) SHLD		O3-HVAC-PIT-2307,-2308,-2309,-2310	BOILER CONTROL PANEL	E310	
3337A	1	1"	4(2/C#16) SHLD		O3-HVAC-TIT-2307,-2308	BOILER CONTROL PANEL	E310	
3338A	1	1"	(2/C#16) SHLD		O3-HVAC-TIT-2305	BOILER CONTROL PANEL	E310	
3339A	1	1"	2(2/C#16) SHLD		O3-HVAC-PIT-2301,-2302	BOILER CONTROL PANEL	E310	
3340A	1	1"	2(2/C#16) SHLD		O3-HVAC-PIT-2303,-2304	BOILER CONTROL PANEL	E310	
3341A	1	1"	2(2/C#16) SHLD		O3-HVAC-PIT-2305,-2306	BOILER CONTROL PANEL	E310	
3342P	1	1"	3#10. 1#10G		O3-HVAC-P-2311	BOILER CONTROL PANEL	E310	
3343P	1	1"	3#10. 1#10G		O3-HVAC-P-2312	BOILER CONTROL PANEL	E310	
3344C	1	1"	2#14, 2#14 SPARE		O3-PA-SV-0490	CP-300A	E309, E310	
3400P	1	1"	3#8, 1#8G		VFD-4302A (MCC-300)	P-4302A	E309,E310,E311	VIA JB-P
3401P	1	1"	3#8, 1#8G		VFD-4302B (MCC-300)	P-4302B	E309,E310,E311	VIA JB-P
3402P	1	1"	3#10, 1#10G		PL-300	CLEANING PUMP VCP (CP-300E)	E309,E310,E311	VIA JB-120V
3403P	1	1"	3#10, 1#10G		O3-FLW-MOV-0502	JUNCTION BOX (JB-P)	E311	
3404P	1	1"	3#10, 1#10G		O3-FLW-MOV-0501	JUNCTION BOX (JB-P)	E311	
3405P	1	1"	3#10, 1#10G		O3-FLW-MOV-0512	JUNCTION BOX (JB-P)	E311	
3406P	1	1"	3#10, 1#10G		O3-FLW-MOV-0511	JUNCTION BOX (JB-P)	E311	
3407P	1	1"	2#10, 1#10G		O3-FLW-MOV-0503	CP-300E	E311	
3408C	1	1"	10#14, 2#14 SPARE		O3-FLW-MOV-0503	CP-300E	E311	
3409P	1	2"	3#1, 1#6G		ISOLATION XFMR FOR CP-300C	CP-300C	E309,E310,E311	VIA JB-P
3410P	1	2"	3#1, 1#6G		ISOLATION XFMR FOR CP-300D	CP-300D	E309,E310,E311	VIA JB-P
3411P	1	1"	2#10, 1#10G		O3-FLW-MOV-0513	CP-300E	E311	
3412C	1	1"	10#14, 2#14 SPARE		O3-FLW-MOV-0513	CP-300E	E311	
3413A	1	1"	(2/C#16) SHLD		CP-300C	CP-300D	E311	
3414C	1	1"	10#14, 2#14 SPARE		O3-FLW-MOV-0502	JUNCTION BOX (JB-C)	E311	
3415C	1	1"	10#14, 2#14 SPARE		O3-FLW-MOV-0501	JUNCTION BOX (JB-C)	E311	
3416P	1	1"	2#10, 1#10G		O3-FLW-FSL-0501	CP-300A	E311	VIA 3473P
3417C	1	1"	2#14		O3-FLW-FSL-0501	CP-300A	E311	VIA 3472C
3418C	1	1"	10#14, 2#14 SPARE		O3-FLW-MOV-0512	JUNCTION BOX (JB-C)	E311	
3419C	1	1"	10#14, 2#14 SPARE		O3-FLW-MOV-0511	JUNCTION BOX (JB-C)	E311	

FILENAME: 6232-E323.dwg LAST UPDATED: 01/19/2012 10:41 AM LAST SAVED BY: ypsee

No.	DATE	REVISIONS	APPROVED

DESIGNED: YPS
DRAWN: YPS
CHECKED: RVT

RBF CONSULTING
carollo
IRVINE RANCH WATER DISTRICT

RHONDA V. TIEJERINA REE NO. 15473 ELECTRICAL ENGINEER DATE
CINDY MILLER RCE NO. 58116 PROJECT MANAGER DATE
PATRICIA UEMATSU RCE NO. 36762 PRINCIPAL ENGINEER DATE

IRVINE RANCH WATER DISTRICT
BAKER WATER TREATMENT PLANT
PROJECT NO. 11218

TREATMENT BUILDING
CONDUIT & CABLE SCHEDULES II

DRAWING E323
SHEET 498 OF 632

CONDUIT SCHEDULE

PLAN SYMBOL #	CONDUIT QTY	CONDUIT SIZE	CONDUCTOR QTY.& SIZE	CONDUCTOR INSULATION RATING	LOCATION FROM	LOCATION TO	LOCATION DWG. NOS	REMARKS
3420P	1	1"	2#10, 1#10G	600V	03-FLW-FSL-0511	CP-300A	E311	VIA 3476P
3421C	1	1"	2#14		03-FLW-FSL-0511	CP-300A	E311	VIA 3472C
3422P	1	1"	2#10, 1#10G		03-FLW-MOV-0504	CP-300E	E311	
3423C	1	1"	4#14		03-FLW-LSH-0501, -TSH-0501	CP-300C	E311	
3424C	1	1"	10#14, 2#14 SPARE		03-FLW-MOV-0504	CP-300E	E311	
3425P	1	1"	2#10, 1#10G		03-FLW-MOV-0514	CP-300E	E311	
3426C	1	1"	4#14		03-FLW-LSH-0511, -TSH-0511	CP-300D	E311	
3427C	1	1"	10#14, 2#14 SPARE		03-FLW-MOV-0514	CP-300E	E311	
3428A	1	1"	6(5/C#22) SHLD		CP-300C	UV-1	E311	
3429P	1	4"	36(4C LAMP CABLES)		CP-300C	UV-1	E311	
3430P	1	4"	36(4C LAMP CABLES)		CP-300C	UV-1	E311	
3431A	1	1"	6(5/C#22) SHLD		CP-300D	UV-2	E311	
3432P	1	4"	36(4C LAMP CABLES)		CP-300D	UV-2	E311	
3433P	1	4"	36(4C LAMP CABLES)		CP-300D	UV-2	E311	
3434A	1	1"	(2/C#16) SHLD		CP-300C	CP-300D	E311	
3435A	1	2"	DATA LINK		CP-300C	CP-300A	E311	VIA JB-C
3436A	1	2"	DATA LINK		CP-300D	CP-300A	E311	VIA JB-C
3437P	1	1"	2#10, 1#10G		03-FLW-MOV-0505	CP-300E	E311	
3438C	1	1"	10#14, 2#14 SPARE		03-FLW-MOV-0505	CP-300E	E311	
3439P	1	1"	2#10, 1#10G		03-FLW-MOV-0515	CP-300E	E311	
3440C	1	1"	10#14, 2#14 SPARE		03-FLW-MOV-0515	CP-300E	E311	
3441P	1	1"	2#10, 1#10G		03-FLW-LCP-0540	PB2(P)	E310,E311	
3442C	1	1"	6#14, 2#14 SPARE		03-FLW-LCP-0540	CP-300B	E310,E311	
3443P	1	1"	2#10, 1#10G		03-FLW-LCP-0550	PB2(P)	E310,E311	
3444C	1	1"	6#14, 2#14 SPARE		03-FLW-LCP-0550	CP-300B	E310,E311	
3445P	1	1"	2#10, 1#10G		03-FLW-LCP-1061	PB2(P)	E310,E311	
3446C	1	1"	6#14, 2#14 SPARE		03-FLW-LCP-1061	CP-300B	E310,E311	
3447C	1	1"	4#14		VFD-4302A (MCC-300)	03-FLW-P-4302A (VIA JB-C)	E311	SPACE HTR, TSH
3448C	1	1"	4#14		VFD-4302B (MCC-300)	03-FLW-P-4302B (VIA JB-C)	E311	SPACE HTR, TSH
3449A	1	1"	MSC		03-FLW-FIT-4305	03-FLW-FE-4305	E311	
3450A	1	1"	MSC		03-FLW-FIT-0531	03-FLW-FE-0531	E311	
3451P	1	1"	2#10, 1#10G		03-FLW-FIT-0531	JUNCTION BOX (JB-120V)	E311	
3452A	1	1"	(2/C#16) SHLD		03-FLW-FIT-0531	JUNCTION BOX (JB-C)	E311	
3453P	1	1"	2#10, 1#10G		03-FLW-AIT-0500	CP-300C	E311	
3454A	1	1"	(2/C#16) SHLD		03-FLW-AIT-0500	CP-300C	E311	
3455A	1	1"	(2/C#16) SHLD		03-FLW-PIT-4003	CP-300B	E311	
3456P	1	1"	2#10, 1#10G		CP-300E	03-UCF-P-0522	E311	
3457P	1	1"	2#10, 1#10G		CP-300E	03-UCF-P-0523	E311	
3458C	1	1"	4#14		CP-300E	03-UCF-LSH-0521,-LSL-0521	E311	
3459P	1	1"	2#10, 1#10G		03-UW1-FIT-0061	JUNCTION BOX	E311	
3460A	1	1"	(2/C#16) SHLD		03-UW1-FIT-0061	JUNCTION BOX	E311	
3461P	1	1"	2#10, 1#10G		03-UW1-FIT-0053	JUNCTION BOX	E311	
3462A	1	1"	(2/C#16) SHLD		03-UW1-FIT-0053	JUNCTION BOX	E311	
3463P	1	1"	2#10, 1#10G		03-UW1-FIT-0052	JUNCTION BOX	E311	
3464A	1	1"	(2/C#16) SHLD		03-UW1-FIT-0052	JUNCTION BOX	E311	
3465P	1	1"	2#10, 1#10G		03-UW1-FIT-0051	JUNCTION BOX	E311	
3466A	1	1"	(2/C#16) SHLD		03-UW1-FIT-0051	JUNCTION BOX	E311	
3467P	1	1"	2#10, 1#10G		03-UW1-FIT-0062	JUNCTION BOX	E311	
3468A	1	1"	(2/C#16) SHLD		03-UW1-FIT-0062	JUNCTION BOX	E311	

CONDUIT SCHEDULE

PLAN SYMBOL #	CONDUIT QTY	CONDUIT SIZE	CONDUCTOR QTY.& SIZE	CONDUCTOR INSULATION RATING	LOCATION FROM	LOCATION TO	LOCATION DWG. NOS	REMARKS
3469P	1	1"	3#10, 1#10G	600V	03-UW1-MOV-0063	JUNCTION BOX (JB-P)	E311	
3470C	1	1"	10#14, 2#14 SPARE		03-UW1-MOV-0063	JUNCTION BOX (JB-C)	E311	
3471P	1	1"	9#10, 1#10G		MCC-300	JUNCTION BOX (JB-P)	E309,E310,E311	3403P,3404P,3405P
3472C	1	2"	54#14, 10#14 SPARE		CP-300A	JUNCTION BOX (JB-C)	E309,E310,E311	3414C,3415C,3418C 3419C,3420C,3417C,3421C
3473P	1	2"	16#10, 1#10G		CP-300A	JUNCTION BOX (JB-120V)	E309,E310,E311	3451P,3475P,3416P 3420P
3474A	1	2"	9(2/C#16) SHLD		CP-300A	JUNCTION BOX (JB-C)	E309,E310,E311	3452A,3476A,3486A
3475P	1	1"	10#10, 1#10G		JUNCTION BOX	JUNCTION BOX (JB-120V)	E309,E310,E311	3459P,3461P 3463P,3465P,3467P
3476A	1	2"	5(2/C#16) SHLD		JUNCTION BOX	JUNCTION BOX (JB-C)	E309,E310,E311	3460A,3462A 3464A,3466A,3468A
3477P	1	1"	3#8, 1#8G & 8#10		PB1(P)	PB2(P)	E309,E310,E311	3441P,3443P,3445P 3005P
3478P	1	2"	CONDUIT ONLY		JUNCTION BOX (JB-P)	ELECTRICAL ROOM	E309,E310,E311	
3479A	1	2"	CONDUIT ONLY		JUNCTION BOX (JB-C)	ELECTRICAL ROOM	E309,E310,E311	
3480P	1	2"	CONDUIT ONLY		JUNCTION BOX (JB-120V)	ELECTRICAL ROOM	E309,E310,E311	
3481P	1	1"	6#10, 1#10G		MCC-300	JUNCTION BOX (JB-P)	E309,E310,E311	3406P,3469P
3482P	1	2"	3#1, 1#6G		MCC-300	ISOLATION XFMR FOR CP-300C	E309	
3483P	1	2"	3#1, 1#6G		MCC-300	ISOLATION XFMR FOR CP-300D	E309	
3484P	1	1"	3#10, 1#10G		MCC-300	BRIDGE CRANE	E309,E310,E311	
3485P	1	1"	6#10, 1#10G		CP-300A	PB1(P)	E309,E310,E311	3441P,3443P,3445P
3486A	1	1"	2(2/C#16) SHLD		MOV-0063	JUNCTION BOX (JB-C)	E311	
3487P	1	1"	2#10, 1#10G		03-FLW-FIT-4305	CP-300B	E310,E311	
3488A	1	1"	(2/C#16) SHLD		03-FLW-FIT-4305	CP-300B	E310,E311	
3489C	1	1"	6#14		CP-300C	UV-1	E311	
3490C	1	1"	6#14		CP-300D	UV-2	E311	
3491A	1	1"	CONDUIT ONLY		CP-300C	CP-300D	E311	
3492A	1	1"	CONDUIT ONLY		CP-300D	CP-300E	E311	
3500P	1	1"	3#10, 1#10G		MCC-300	P-5214A	E309,E310,E311 E313,E314	VIA PULLBOX
3501P	1	1"	3#10, 1#10G		MCC-300	P-5214B	E309,E310,E311 E313,E314	VIA PULLBOX
3502P	1	1"	3#10, 1#10G		MCC-300	P-5214C	E309,E310,E311 E313,E314	VIA PULLBOX
3503P	1	1"	3#10, 1#10G		MCC-300	P-5609A	E309,E310,E311 E313,E314	VIA PULLBOX
3504P	1	1"	3#10, 1#10G		MCC-300	P-5609B	E309,E310,E311 E313,E314	VIA PULLBOX
3505P	1	1"	3#10, 1#10G		MCC-300	P-5609C	E309,E310,E311 E313,E314	VIA PULLBOX
3506P	1	1"	3#8, 1#8G		MCC-300	P-5204A	E309,E310,E311 E313,E314	VIA PULLBOX
3507P	1	1"	3#8, 1#8G		MCC-300	P-5204B	E309,E310,E311 E313,E314	VIA PULLBOX
3508P	1	1"	3#8, 1#8G		MCC-300	P-5204C	E309,E310,E311 E313,E314	VIA PULLBOX
3509C	1	1"	12#14		MCC-300	P-5214A, P-5214B, P-5214C	E309,E310,E311 E314	VIA PULLBOX
3510C	1	1"	12#14		MCC-300	P-5609A, P-5609B, P-5609C	E309,E310,E311 E314	VIA PULLBOX
3511C	1	1"	12#14		MCC-300	P-5204A, P-5204B, P-5204C	E309,E310,E311 E314	VIA PULLBOX
3512P	1	1"	20#14, 1#14G		JB-120V	CP-300B	E310,E311,E314	VIA PULLBOX
3513C	1	2"	51#16, 2#16 SPARE		JB-24VDC	CP-300B	E310,E311,E314	VIA PULLBOX
3514A	1	2"	12(2/C#18) SHLD		JB-C	CP-300B	E310,E311,E314	VIA PULLBOX
3515A	1	2"	4(MODBUS TCP)		JB-C	CP-300B	E310,E311,E314	VIA PULLBOX
3516A	1	2"	CONDUIT ONLY		JB-C	CP-300B	E310,E311,E314	VIA PULLBOX
3517P	1	1"	6#10, 1#10G		SUMP PUMP LCP	PL-300	E309,E310,E311 E314	VIA PULLBOX
3518C	1	1"	2#14		LSH-0010	CP-300A	E309,E310,E311 E314	VIA 3322C
3519P	1	1"	4#10, 1#10G		SUMP PUMP	SUMP PUMP LCP	E314	VIA PULLBOX
3520C	1	1"	8#14		JB-120V	SUM PUMP LCP	E314	VIA PULLBOX
3521P	1	2"	CONDUIT ONLY		LE-0010	PB-3(P)	E314	SPARE
3522P	1	2"	CONDUIT ONLY		JB-P	PB-3(P)	E314	SPARE
3523P	1	2"	CONDUIT ONLY		JB-24VDC	PB-3(C)	E314	SPARE
3524C	1	2"	CONDUIT ONLY		JB-C	PB-3(C)	E314	SPARE
3525C	1	3/4"	4#14		MCC-300	P-5204A	E313,E314	VIA 3511C
3526C	1	3/4"	4#14		MCC-300	P-5214A	E313,E314	VIA 3509C
3527C	1	3/4"	4#14		MCC-300	P-5204C	E313,E314	VIA 3511C
3528C	1	3/4"	4#14		MCC-300	P-5204B	E313,E314	VIA 3511C

CONDUIT NUMBERING SCHEME	CONDUIT ABBREVIATIONS
AREA NUMBER — 3 001 E — CONDUIT ABBREVIATION; CONDUIT NUMBER	P - POWER C - CONTROL A - SIGNAL F - FIBER OPTIC

EQUIPMENT TAG NUMBERS ON THIS DRAWING ARE PRECEDED W/ **05-PW-** UNLESS OTHERWISE LABELED

No.	DATE	REVISIONS	APPROVED

DESIGNED: YPS
DRAWN: YPS
CHECKED: RVT

RBF CONSULTING

carollo

IRVINE RANCH WATER DISTRICT

RHONDA V. TIEJERINA REE NO. 15473 ELECTRICAL ENGINEER DATE
CINDY MILLER RCE NO. 58116 PROJECT MANAGER DATE
PATRICIA UEMATSU RCE NO. 36762 PRINCIPAL ENGINEER DATE

IRVINE RANCH WATER DISTRICT
BAKER WATER TREATMENT PLANT
PROJECT NO. 11218

TREATMENT BUILDING
CONDUIT & CABLE SCHEDULES III

DRAWING **E324**
SHEET **499** OF **632**

FILENAME: 6232-E324.dwg LAST UPDATED: 01/11/2012 04:21 PM LAST SAVED BY: ypsee

CONDUIT SCHEDULE

PLAN SYMBOL #	CONDUIT QTY	CONDUIT SIZE	CONDUCTOR QTY.& SIZE	INSULATION RATING	LOCATION FROM	LOCATION TO	LOCATION DWG. NOS	REMARKS
3529C	1	3/4"	4#14	600V	MCC-300	P-5214B	E313,E314	VIA 3509C
3530C	1	3/4"	4#14		MCC-300	P-5214C	E313,E314	VIA 3509C
3531C	1	3/4"	4#14		MCC-300	P-5609C	E313,E314	VIA 3510C
3532C	1	3/4"	4#14		MCC-300	P-5609B	E313,E314	VIA 3510C
3533C	1	3/4"	4#14		MCC-300	P-5609A	E313,E314	VIA 3510C
3534A	1	3/4"	(2/C#18) SHLD		LIT-5605A	CP-300B	E313,E314	VIA 3514A
3535C	1	3/4"	6#16		LSHH-5603A, LSLL-5604A	CP-300B	E313,E314	VIA 3513C
3536A	1	3/4"	2(2/C#18) SHLD		LIT-5003, TIT-5007	CP-300B	E313,E314	VIA 3514A
3537C	1	3/4"	6#16		LSHH-5002, LSLL-5006	CP-300B	E313,E314	VIA 3513C
3538A	1	3/4"	(2/C#18) SHLD		LIT-5605B	CP-300B	E313,E314	VIA 3514A
3539C	1	3/4"	6#16		LSHH-5603B, LSLL-5604B	CP-300B	E313,E314	VIA 3513C
3540A	1	3/4"	2(2/C#18) SHLD		LIT-5106, TIT-5107	CP-300B	E313,E314	VIA 3514A
3541C	1	3/4"	6#16		LSHH-5102, LSLL-5103	CP-300B	E313,E314	VIA 3513C
3542A	1	3/4"	2(2/C#18) SHLD		AIT-5605A, AIT-5619A	CP-300B	E313,E314	VIA 3514A
3543A	1	3/4"	3(2/C#18) SHLD		AIT-5605B,AIT-5619B,FIT-5670	CP-300B	E313,E314	VIA 3514A
3544P	1	3/4"	2#14, 1#14G		FIT-5670	CP-300B	E313,E314	VIA 3512P
3545C	1	3/4"	12#16		FSL-5203A,FSL-5203C,FSL-5203B FSL-5270A	CP-300B	E313,E314	VIA 3512P
3546C	1	3/4"	9#16		FSL-5654C,FSL-5654B,FSL-5654A	CP-300B	E313,E314	VIA 3513C
3547C	1	3/4"	6#16		FSL-5270C, FSL-5270B	CP-300B	E313,E314	VIA 3513C
3548P	1	1"	4#14, 1#14G		CAUSTIC CIP TANK PWR PL CAUSTIC NEUTRALIZATION PWR PL	CP-300B	E313	VIA 3512P
3549A	1	1"	2(MODBUS TCP)		CAUSTIC CIP TANK PWR PL CAUSTIC NEUTRALIZATION PWR PL	CP-300B	E313	VIA 3515A
3550P	1	1"	4#14, 1#14G		ACID CIP TANK PWR PL ACID NEUTRALIZATION PWR PL	CP-300B	E313	VIA 3512P
3551A	1	1"	2(MODBUS TCP)		ACID CIP TANK PWR PL ACID NEUTRALIZATION PWR PL	CP-300B	E313	VIA 3515A
3552P	1	3/4"	4#14, 1#14G		AIT-5605B, AIT-5619B	CP-300B	E313	VIA 3512P
3553P	1	3/4"	4#14, 1#14G		AIT-5605A, AIT-5619A	CP-300B	E313	VIA 3512P
3554P	1	3/4"	2#14, 1#14G		FIT-0030	CP-300B	E313	VIA 3512P
3555A	1	3/4"	(2/C#18) SHLD		FIT-0030	CP-300B	E313	VIA 3514A

VOLTS 120/208V PANEL PL-300 MAIN BREAKER 150A
PHASE 3 LOCATION IN MCC-300 BUS RATING 200A
WIRE 4 MOUNTING: IN MCC

DESCRIPTION	LTS.	REC.	MISC.	VOLT-AMPS øA	VOLT-AMPS øB	VOLT-AMPS øC	BRKR. AMP	BRKR. P	CIR.	CIR.	BRKR. P	BRKR. AMP	VOLT-AMPS øA	VOLT-AMPS øB	VOLT-AMPS øC	LTS.	REC.	MISC.	DESCRIPTION
TREATMENT BUILIDNG LIGHTS	X			2400			20	1	1	2	1	20	900				X		TREATMENT BUILDING RECEPTACLE
	X				2400		20	1	3	4	1	20		900			X		TREATMENT BUILDING RECEPTACLE
TREATMENT BUILIDNG LIGHTS	X					2400	20	1	5	6	1	20			900		X		ELEC ROOM RECEPTACLE
	X			2400			20	1	7	8	1	20	900				X		BOILER RECEPTACLE
TREATMENT BUILIDNG LIGHTS	X				2400		20	1	9	10	1	20		500			X		JOHNSON CONTROL PANEL
	X					2400	20	1	11	12	1	20			500		X		SECURITY CONTROL PANEL
EXIT LIGHTS	X			280			20	1	13	14	1	20	180				X		CP-300A & CP-300B (RECEPTACLE)
EMERGENCY LIGHTS	X				150		20	1	15	16	1	20		500				X	M-6002A, M-6002B
WALPACK LIGHTS	X					770	40	1	17	18	1	30			1500			X	UPS-300A
EXTERIOR LIGHTS	X			700			40	1	19	20	1	30	1500					X	
CANOPY LIGHTS	X				1190		40	1	21	22	1	30		1500				X	
HVAC/STORAGE ROOM LIGHTS	X					372	40	1	23	24	1	40			2000			X	UPS-300B
ELECTRICAL ROOM LIGHTS	X			620			20	1	25	26	1	40	2000					X	
BOILER/AIR COMPRESSOR ROOM LTGS	X				434		20	1	27	28	1	40		2000				X	
BOILER/AIR COMPRESSOR ROOM LTGS	X					496	20	1	29	30	1	20			1644			X	PL-300-SUB
PERIMETER LIGHTS ZONE 3	X			500			20	2/	31	32	1	20		1590				X	
	X				500		20	/P	33	34	1	20	2420					X	
PERIMETER LIGHTS ZONE 3	X					500	20	2/	35	36	2/	20			600			X	BS-2301, EVP-2301, EVP-2302 EVP-2303, EVP-2304
	X			500			20	/P	37	38	/P	20	600					X	
PERIMETER LIGHTS ZONE 3	X				500		20	2/	39	40	2/	20		1000				X	BS-2305,-2306,-2307,-2308,-2309, BS-2310, EVP-2305,EVP-2306, EVP-2307,-2308,-2309, 2310
	X					500	20	/P	41	42	/P	20			1000			X	
SPARE							20	1	43	44	1	20	500						CP-300E
SPARE							20	1	45	46	2/	30		500					BOL-2301, BOL-2302, BOL-2303
SPARE							20	1	47	48	/P	30			500				

SUBTOTAL 6400 6574 6438 8320 7490 8144

LOAD øA 14720 øB 14064 øC 14582

LCL X .25 øA - øB - øC -

TOTAL øA 14720 øB 14064 øC 14582

PANEL TOTAL 43366 VOLT-AMPS. = 120.37 AMPS

HIGH LEG 14720 VOLT-AMPS. = 122.67 AMPS

VOLTS 120/208V PANEL PL-300-SUB MAIN BREAKER 50A
PHASE 3 LOCATION OFFICE ROOM BUS RATING 100A
WIRE 4 MOUNTING: WALL

DESCRIPTION	LTS.	REC.	MISC.	VOLT-AMPS øA	VOLT-AMPS øB	VOLT-AMPS øC	BRKR. AMP	BRKR. P	CIR.	CIR.	BRKR. P	BRKR. AMP	VOLT-AMPS øA	VOLT-AMPS øB	VOLT-AMPS øC	LTS.	REC.	MISC.	DESCRIPTION
OFFICE LIGHTS	X			630			20	1	1	2	1	20	540				X		OFFICE RECEPTACLE
OFFICE LIGHTS	X				630		20	1	3	4	1	20		900			X		OFFICE RECEPTACLE
STAIRWAY LIGHTS	X					744	20	1	5	6	1	20			900			X	LAB RECEPTACLE
LAB/COPIER ROOM LIGHTS	X			350			20	1	7	8	1	20	900					X	COPIER RECEPTACLE
LAB/COPIER ROOM LIGHTS	X				60		20	1	9	10	1	20							SPACE
RESTROOM LIGHTS							20	1	11	12	1	20							SPACE
SPARE							20	1	13	14	1	20							SPACE
SPARE							20	1	15	16	1	20							SPACE
SPARE							20	1	17	18	1	20							SPARE
SPARE							20	1	19	20	1	20							SPARE
SPARE							20	1	21	22	1	20							SPACE
SPARE							20	1	23	24	1	20							SPACE

SUBTOTAL 980 690 744 1440 900 900

LOAD øA 2420 øB 1590 øC 1644

LCL X .25 øA - øB - øC -

TOTAL øA 2420 øB 1590 øC 1644

PANEL TOTAL 5654 VOLT-AMPS. = 15.69 AMPS

HIGH LEG 2420 VOLT-AMPS. = 20.17 AMPS

VOLTS 120/208V PANEL 300-UPS MAIN BREAKER 50A
PHASE 3 LOCATION ELECTRICAL ROOM BUS RATING 100A
WIRE 4 MOUNTING: WALL

DESCRIPTION	LTS.	REC.	MISC.	VOLT-AMPS øA	VOLT-AMPS øB	VOLT-AMPS øC	BRKR. AMP	BRKR. P	CIR.	CIR.	BRKR. P	BRKR. AMP	VOLT-AMPS øA	VOLT-AMPS øB	VOLT-AMPS øC	LTS.	REC.	MISC.	DESCRIPTION
CP-300A	X			310			20	1	1	2	1	20	540				X		SPACE
NETWORK RACK 1	X				744		20	1	3	4	1	20		900			X		SPACE
NETWORK RACK 2	X					744	20	1	5	6	1	20			1000			X	SPACE
SPARE	X			350			20	1	7	8	3/	60	2500					X	SPACE
SPARE	X				60		20	1	9	10		60		2500				X	SPACE
SPARE							20	1	11	12	P	60			2500			X	SPACE
SPARE							20	1	13	14	1	40							SPACE
SPARE							20	1	15	16	1	20							SPACE
SPARE							20	1	17	18	1	20							SPARE
SPARE							20	1	19	20	1	20							SPARE
SPARE							20	1	21	22	1	20							SPACE
SPARE							20	1	23	24	1	20							SPACE

SUBTOTAL 660 804 744 3040 3400 3500

LOAD øA 3700 øB 4204 øC 4244

LCL X .25 øA - øB - øC -

TOTAL øA 3700 øB 4204 øC 4244

PANEL TOTAL 12148 VOLT-AMPS. = 33.72 AMPS

HIGH LEG 4244 VOLT-AMPS. = 35.37 AMPS

FILENAME: 6232-E325.dwg LAST UPDATED: 01/16/2012 04:23 PM LAST SAVED BY: ypsee

No.	DATE	REVISIONS	APPROVED

DESIGNED: YPS
DRAWN: YPS
CHECKED: RVT

RBF CONSULTING carollo IRVINE RANCH WATER DISTRICT

RHONDA V. TIEJERINA REE NO. 15473 ELECTRICAL ENGINEER DATE
CINDY MILLER RCE NO. 58116 PROJECT MANAGER DATE
PATRICIA UEMATSU RCE NO. 36762 PRINCIPAL ENGINEER DATE

IRVINE RANCH WATER DISTRICT
BAKER WATER TREATMENT PLANT
PROJECT NO. 11218

TREATMENT BUILDING CONDUIT, CABLE & PANELBOARD SCHEDULES

DRAWING E325
SHEET 500 OF 632

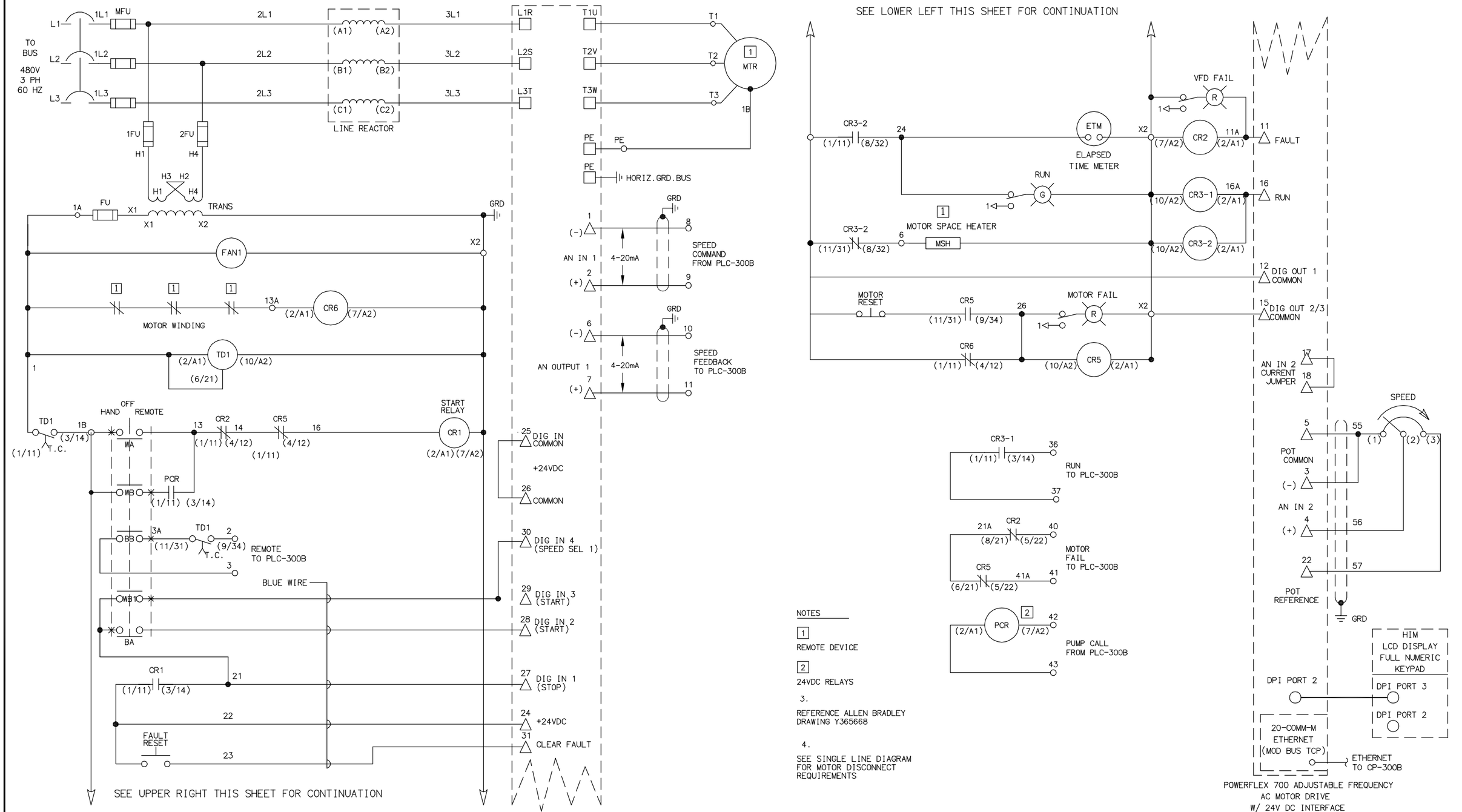

NOTES

1 REMOTE DEVICE

2 24VDC RELAYS

3. REFERENCE ALLEN BRADLEY DRAWING Y365668

4. SEE SINGLE LINE DIAGRAM FOR MOTOR DISCONNECT REQUIREMENTS

VFD PUMP CONTROL SCHEMATIC

(TYP. FOR M-6039A, M-6039B, P-4302A, P-4302B)

1 / –

EQUIPMENT TAG NUMBERS ON THIS DRAWING ARE PRECEDED W/ **03-FLW-** UNLESS OTHERWISE LABELED

No.	DATE	REVISIONS	APPROVED

DESIGNED: YPS
DRAWN: YPS
CHECKED: RVT

RBF CONSULTING

carollo

IRVINE RANCH WATER DISTRICT

RHONDA V. TIEJERINA REE NO. 15473 ELECTRICAL ENGINEER DATE
CINDY MILLER RCE NO. 58116 PROJECT MANAGER DATE
PATRICIA UEMATSU RCE NO. 36762 PRINCIPAL ENGINEER DATE

IRVINE RANCH WATER DISTRICT
BAKER WATER TREATMENT PLANT
PROJECT NO. 11218

TREATMENT BUILDING SCHEMATIC CONTROL DIAGRAM I

DRAWING **E326**

SHEET **501** OF **632**

FILENAME: 6232-E326.dwg
LAST UPDATED: 01/16/2012 10:53 AM
LAST SAVED BY: ypsee

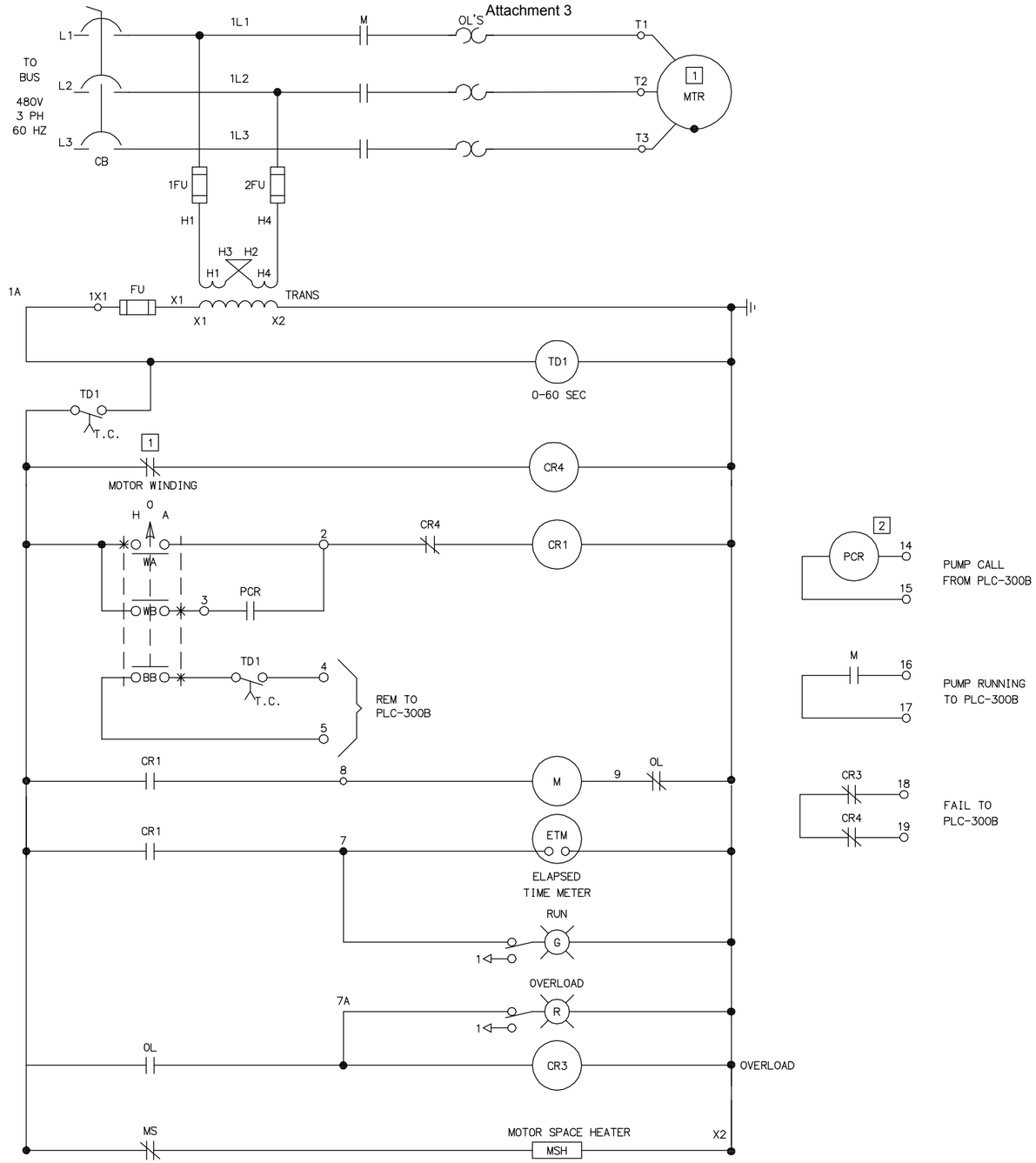

NOTES

1 REMOTE DEVICE

2 24VDC RELAYS

3. REFERENCE ALLEN BRADLEY DRAWING Y365662

4. SEE SINGLE LINE DIAGRAM FOR MOTOR DISCONNECT REQUIREMENTS

TYPICAL MOTOR STARTER CONTROL SCHEMATIC (1)

NTS (P-5204A, P-5204B, P-5204C, P-5214A, P-5214B, P-5214C, P-5609A, P-5609B, P-5609C, M-6038A, M-6038B)

EQUIPMENT TAG NUMBERS ON THIS DRAWING ARE PRECEDED W/ **03-FLW-** UNLESS OTHERWISE LABELED

No.	DATE	REVISIONS	APPROVED

DESIGNED: YPS
DRAWN: YPS
CHECKED: RVT

RBF CONSULTING

carollo

IRVINE RANCH WATER DISTRICT

RHONDA V. TIEJERINA REE NO. 15473 ELECTRICAL ENGINEER DATE

CINDY MILLER RCE NO. 58116 PROJECT MANAGER DATE

PATRICIA UEMATSU RCE NO. 36762 PRINCIPAL ENGINEER DATE

IRVINE RANCH WATER DISTRICT
BAKER WATER TREATMENT PLANT
PROJECT NO. 11218

TREATMENT BUILDING SCHEMATIC CONTROL DIAGRAM II

DRAWING **E327**

SHEET **502** OF **632**

FILENAME: 6232-E327.dwg
LAST UPDATED: 01/30/2012 09:49 AM
LAST SAVED BY: ypsee

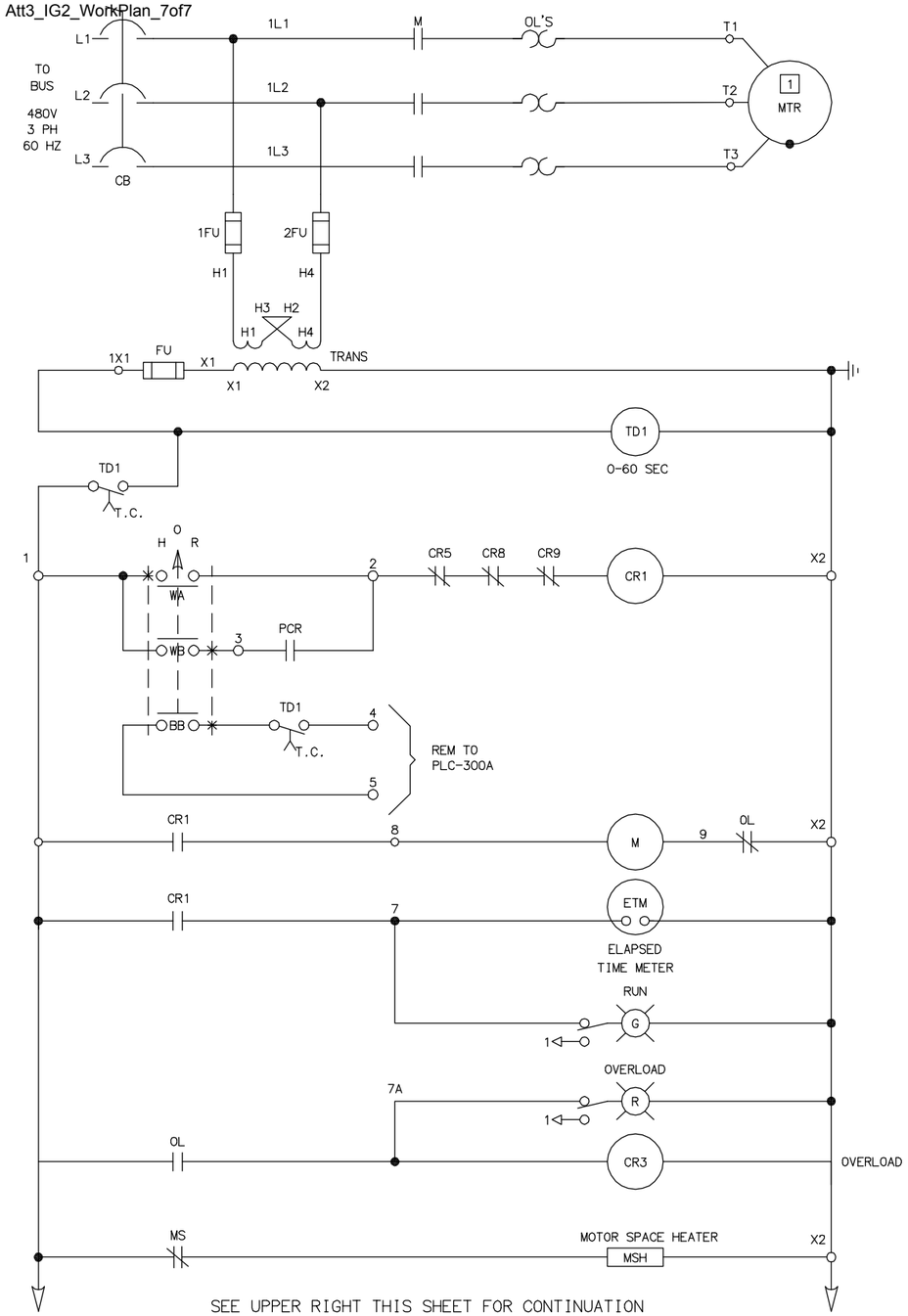

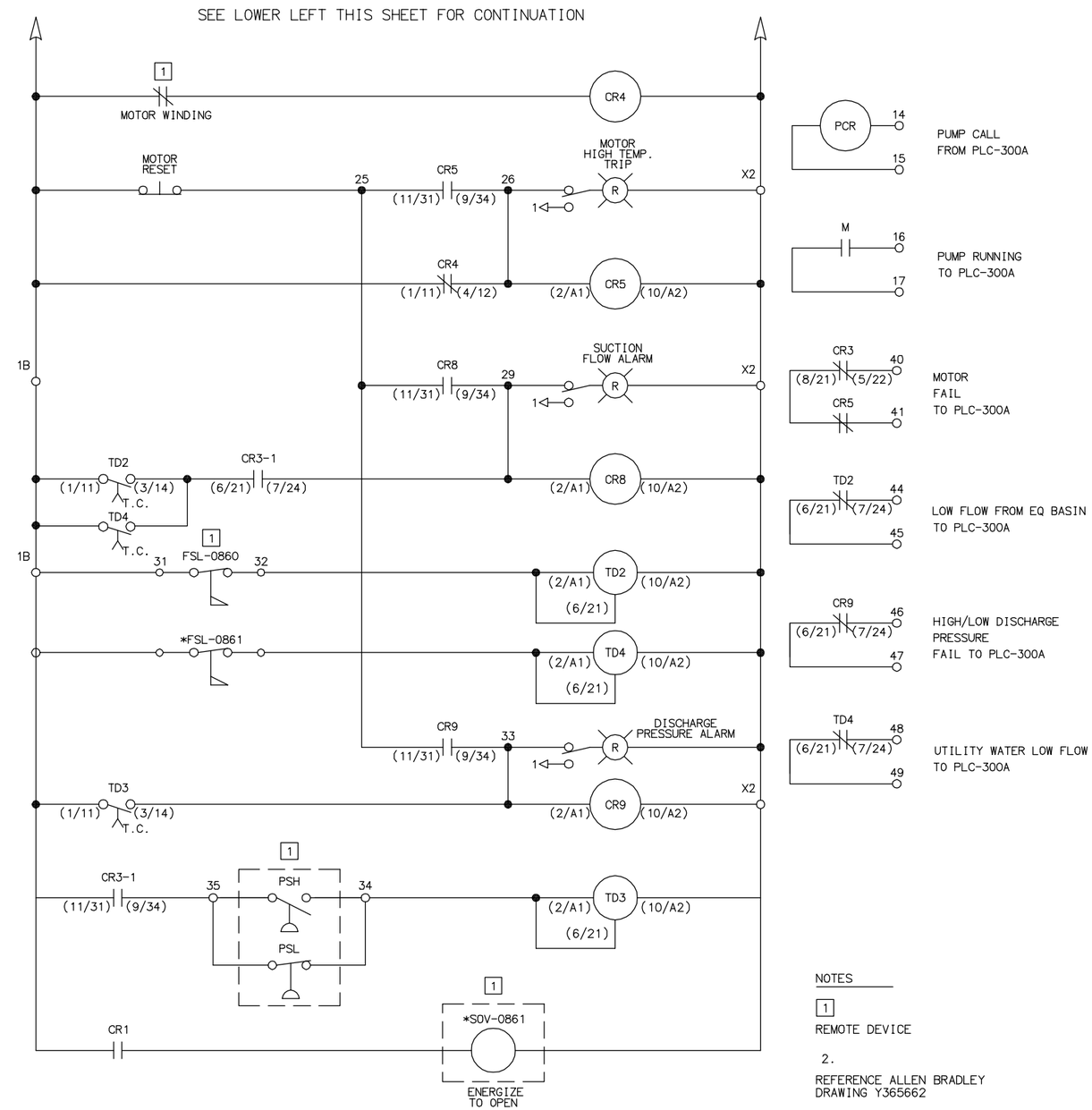

NOTES

1. REMOTE DEVICE

2. REFERENCE ALLEN BRADLEY DRAWING Y365662

3. SEE SINGLE LINE DIAGRAM FOR MOTOR DISCONNECT REQUIREMENTS

* EQUIPMENT TAG NUMBER PRECEDED WITH 06-UW2-

EQUIPMENT TAG NUMBERS ON THIS DRAWING ARE PRECEDED W/**06-MFWW-** UNLESS OTHERWISE LABELED

MOTOR STARTER CONTROL SCHEMATIC

(P-0860)

1 / –

No.	DATE	REVISIONS	APPROVED

DESIGNED: YPS
DRAWN: YPS
CHECKED: RVT

RBF CONSULTING

carollo

IRVINE RANCH WATER DISTRICT

RHONDA V. TIEJERINA REE NO. 15473 ELECTRICAL ENGINEER DATE
CINDY MILLER RCE NO. 58116 PROJECT MANAGER DATE
PATRICIA UEMATSU RCE NO. 36762 PRINCIPAL ENGINEER DATE

IRVINE RANCH WATER DISTRICT
BAKER WATER TREATMENT PLANT
PROJECT NO. 11218

TREATMENT BUILDING SCHEMATIC CONTROL DIAGRAM III

DRAWING **E328**

SHEET **503** OF **632**

FILENAME: 6232-E328.dwg
LAST UPDATED: 01/16/2012 04:28 PM
LAST SAVED BY: ypsee

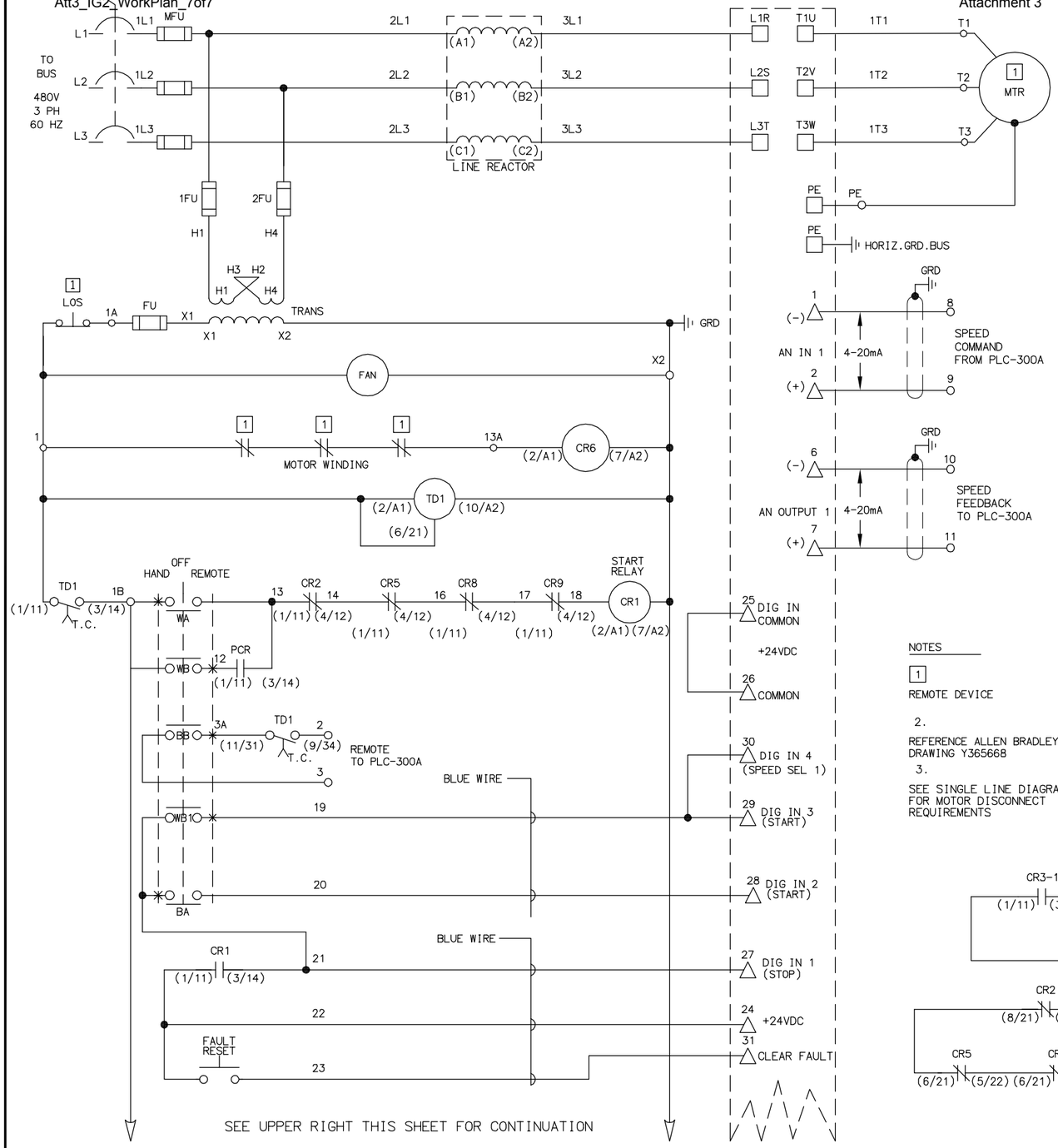

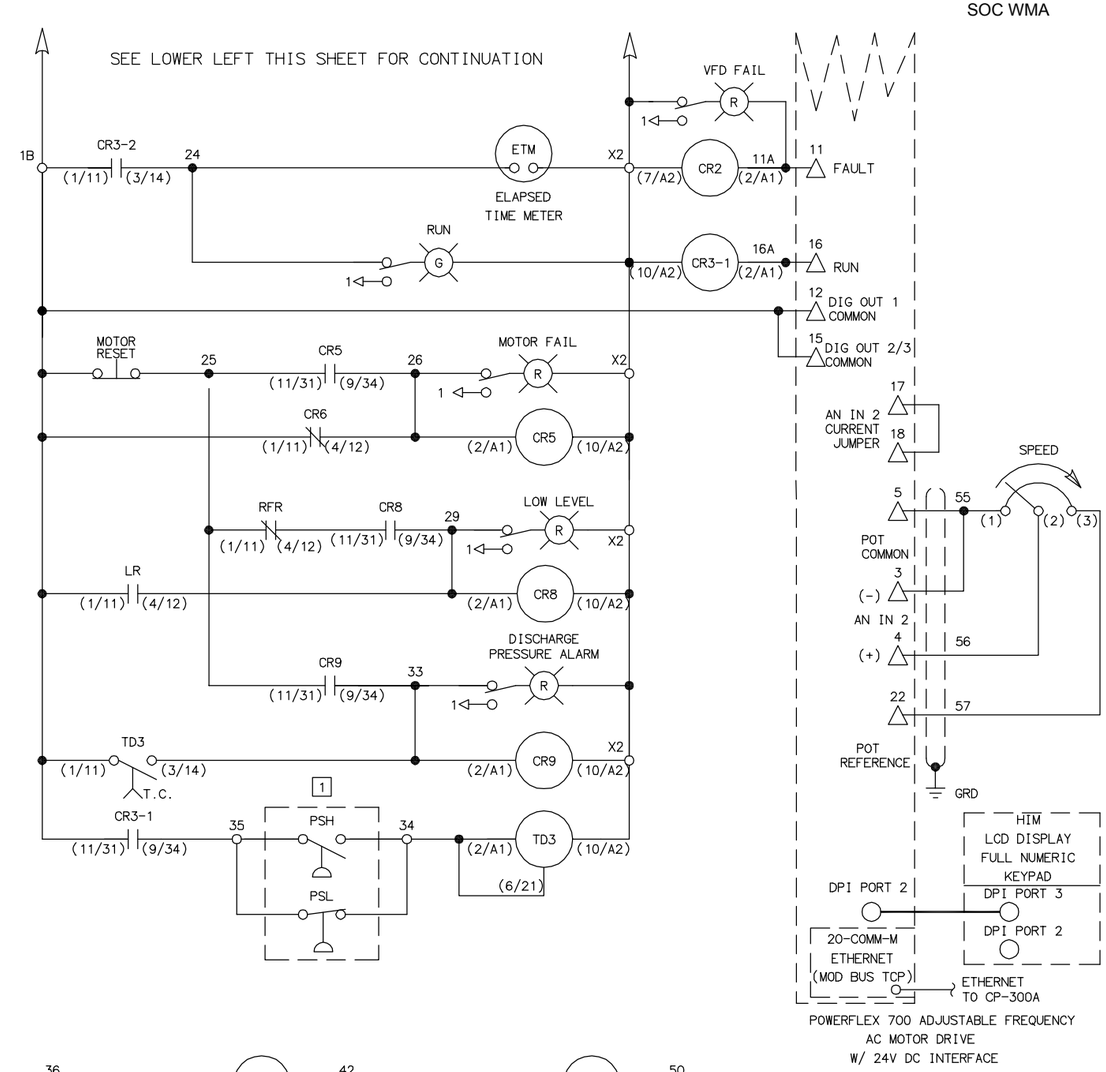

NOTES

1. REMOTE DEVICE

2. REFERENCE ALLEN BRADLEY DRAWING Y365668

3. SEE SINGLE LINE DIAGRAM FOR MOTOR DISCONNECT REQUIREMENTS

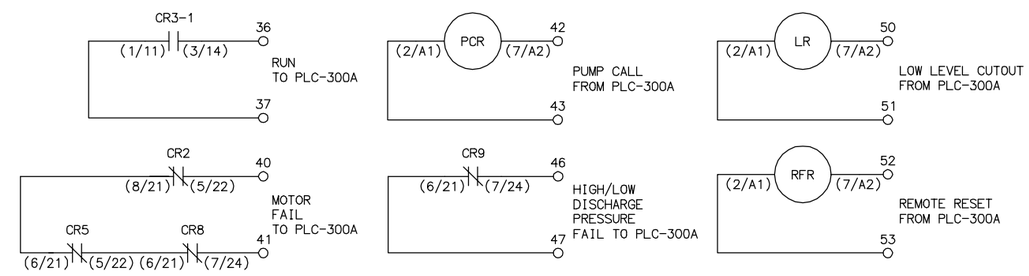

EQUIPMENT TAG NUMBERS ON THIS DRAWING ARE PRECEDED W/ **06-MFWW-** UNLESS OTHERWISE LABELED

PUMP CONTROL SCHEMATIC

NTS (TYP. FOR P-0810, P-0820, P-0830, P-0840)

1 / –

No.	DATE	REVISIONS	APPROVED

DESIGNED: YPS
DRAWN: YPS
CHECKED: RVT

RBF CONSULTING
carollo
IRVINE RANCH WATER DISTRICT

RHONDA V. TIEJERINA REE NO. 15473 ELECTRICAL ENGINEER DATE
CINDY MILLER RCE NO. 58116 PROJECT MANAGER DATE
PATRICIA UEMATSU RCE NO. 36762 PRINCIPAL ENGINEER DATE

IRVINE RANCH WATER DISTRICT
BAKER WATER TREATMENT PLANT
PROJECT NO. 11218

TREATMENT BUILDING SCHEMATIC CONTROL DIAGRAM IV

DRAWING **E329**
SHEET **504** OF **632**

FILENAME: 6232-E329.dwg
LAST UPDATED: 01/16/2012 10:55 AM
LAST SAVED BY: ypsee

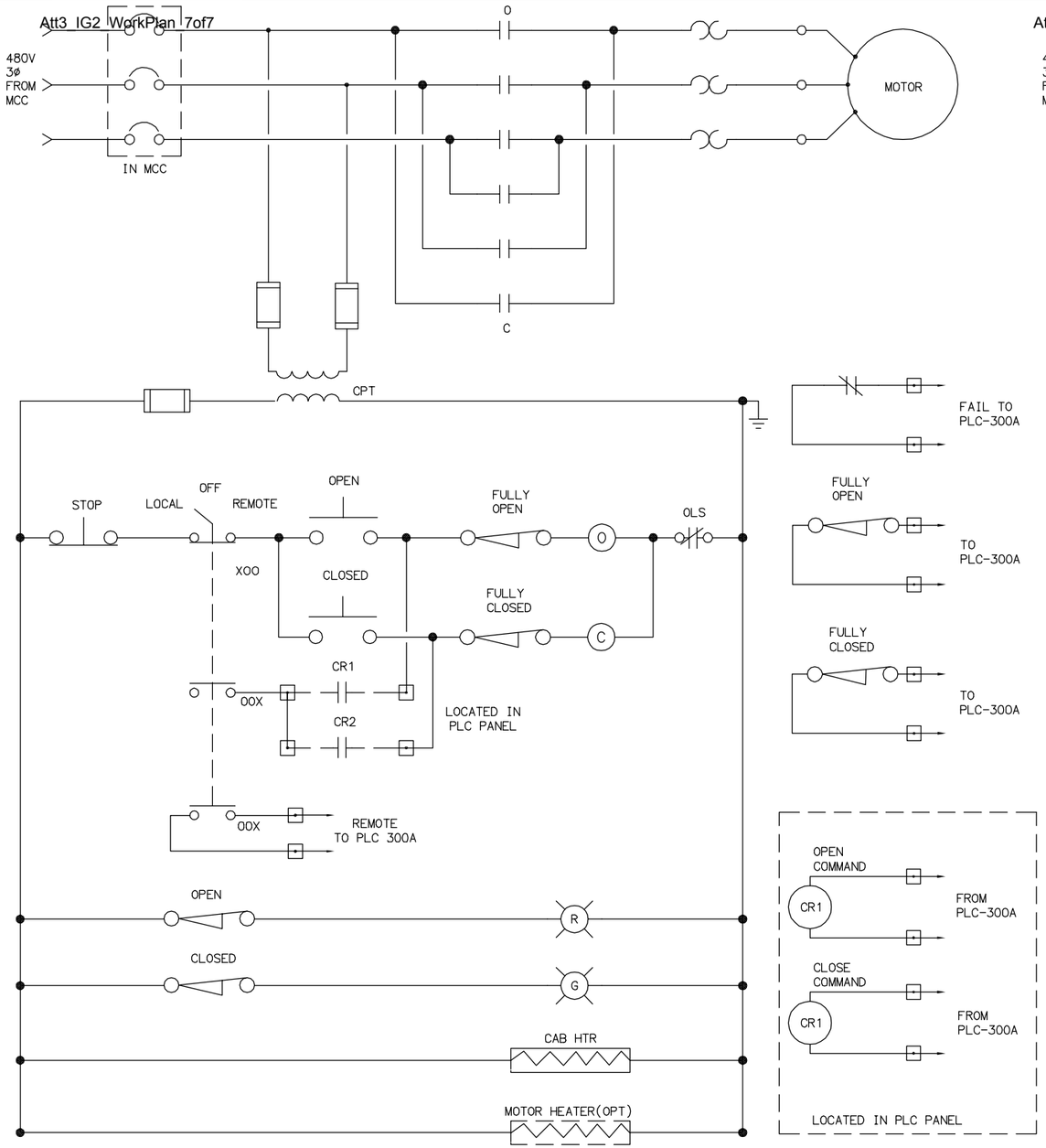

OPEN/CLOSE MOTOR OPERATED VALVE SCHEMATIC

1 / –

NTS (MOV-0501, MOV-0502, MOV-0511, MOV-0512. REMOTE CONTROL STATION REQUIRED)

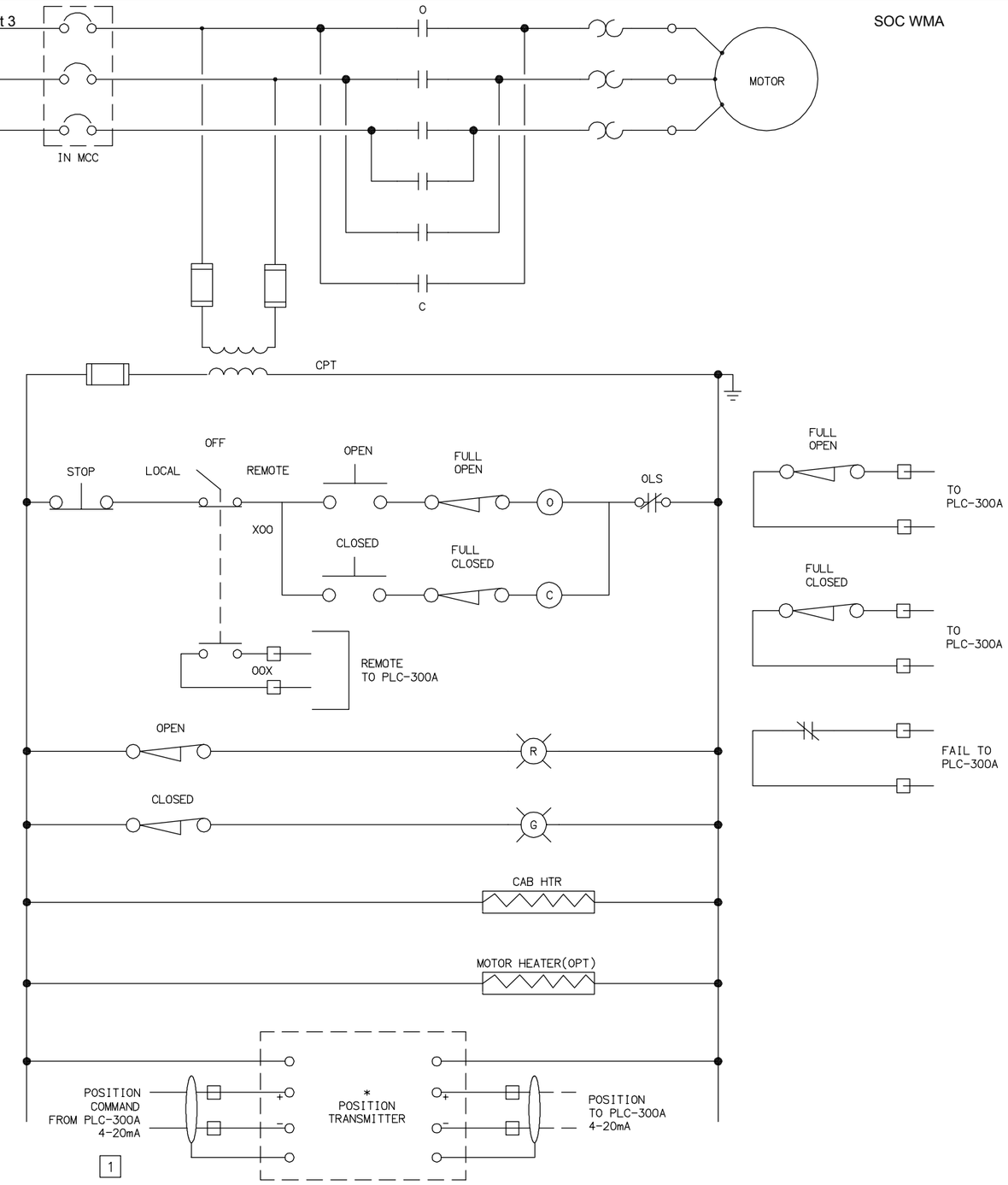

MODULATING MOTOR OPERATOR VALVE SCHEMATIC

2 / –

NTS (03-PW-MOV-0063, 06-MFWW-MOV-0802-REMOTE CONTROL STATION REQUIRED)

EQUIPMENT TAG NUMBERS ON THIS DRAWING ARE PRECEDED W/ **03-FLW-** UNLESS OTHERWISE LABELED

No.	DATE	REVISIONS	APPROVED

DESIGNED: YPS
DRAWN: YPS
CHECKED: RVT

RBF CONSULTING

carollo

IRVINE RANCH WATER DISTRICT

RHONDA V. TIEJERINA REE NO. 15473 ELECTRICAL ENGINEER DATE
CINDY MILLER RCE NO. 58116 PROJECT MANAGER DATE
PATRICIA UEMATSU RCE NO. 36762 PRINCIPAL ENGINEER DATE

IRVINE RANCH WATER DISTRICT
BAKER WATER TREATMENT PLANT
PROJECT NO. 11218

TREATMENT BUILDING SCHEMATIC CONTROL DIAGRAM V

DRAWING **E330**

SHEET **505** OF **632**

FILENAME: 6232-E330.dwg
LAST UPDATED: 01/19/2012 01:41 PM
LAST SAVED BY: ypsee

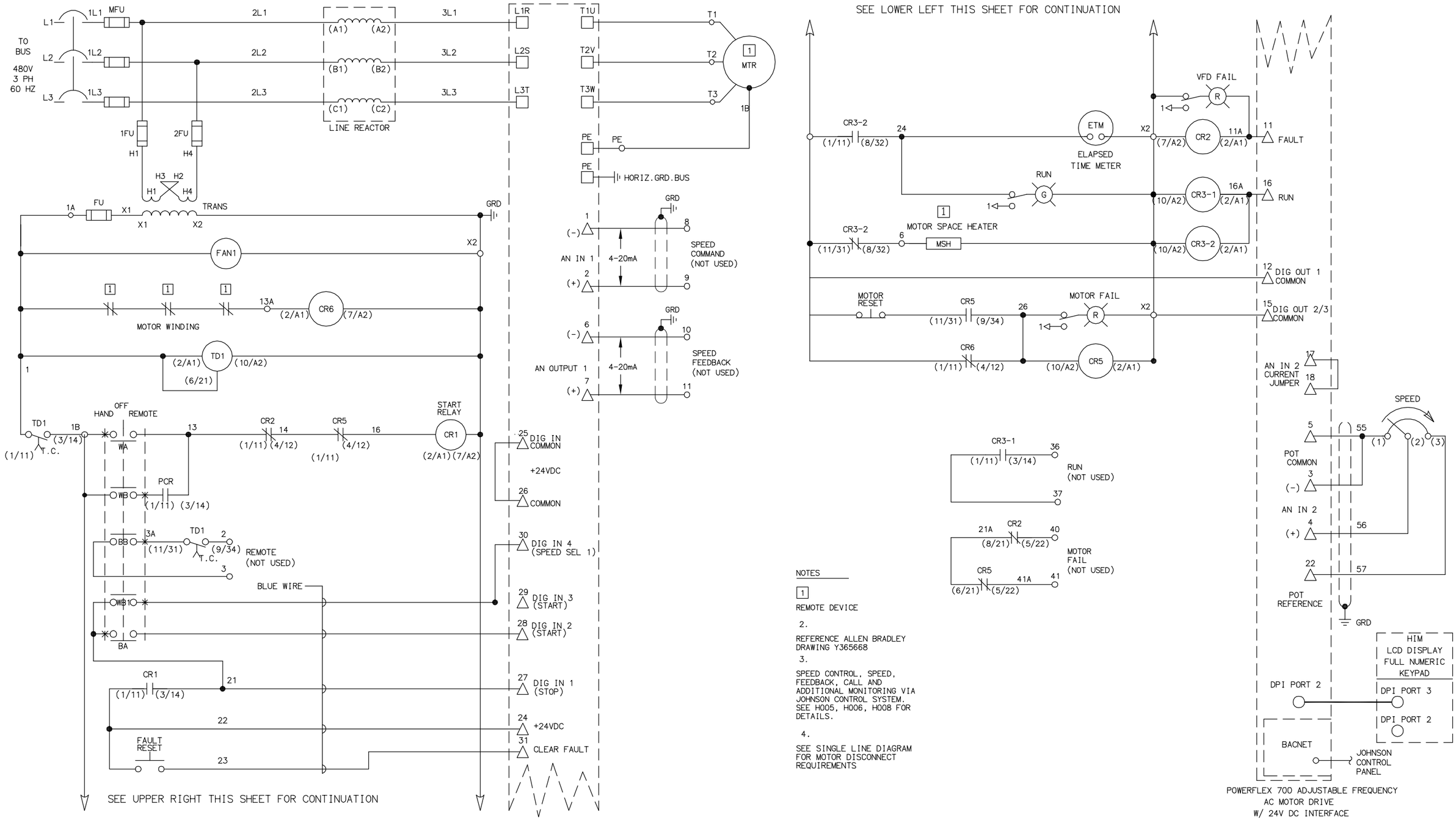

NOTES

1. REMOTE DEVICE

2. REFERENCE ALLEN BRADLEY DRAWING Y365668

3. SPEED CONTROL, SPEED, FEEDBACK, CALL AND ADDITIONAL MONITORING VIA JOHNSON CONTROL SYSTEM. SEE H005, H006, H008 FOR DETAILS.

4. SEE SINGLE LINE DIAGRAM FOR MOTOR DISCONNECT REQUIREMENTS

VFD PUMP CONTROL SCHEMATIC

(SF-2302)

1 / –

EQUIPMENT TAG NUMBERS ON THIS DRAWING ARE PRECEDED W/**03-HVAC-** UNLESS OTHERWISE LABELED

No.	DATE	REVISIONS	APPROVED

DESIGNED: YPS
DRAWN: YPS
CHECKED: RVT

RBF CONSULTING

carollo

IRVINE RANCH WATER DISTRICT

RHONDA V. TIEJERINA	REE NO. 15473	ELECTRICAL ENGINEER	DATE
CINDY MILLER	RCE NO. 58116	PROJECT MANAGER	DATE
PATRICIA UEMATSU	RCE NO. 36762	PRINCIPAL ENGINEER	DATE

IRVINE RANCH WATER DISTRICT
BAKER WATER TREATMENT PLANT
PROJECT NO. 11218

TREATMENT BUILDING SCHEMATIC CONTROL DIAGRAM VI

DRAWING **E331**

SHEET **506** OF **632**

FILENAME: 6232-E331.dwg
LAST UPDATED: 01/16/2012 10:57 AM
LAST SAVED BY: ypsee

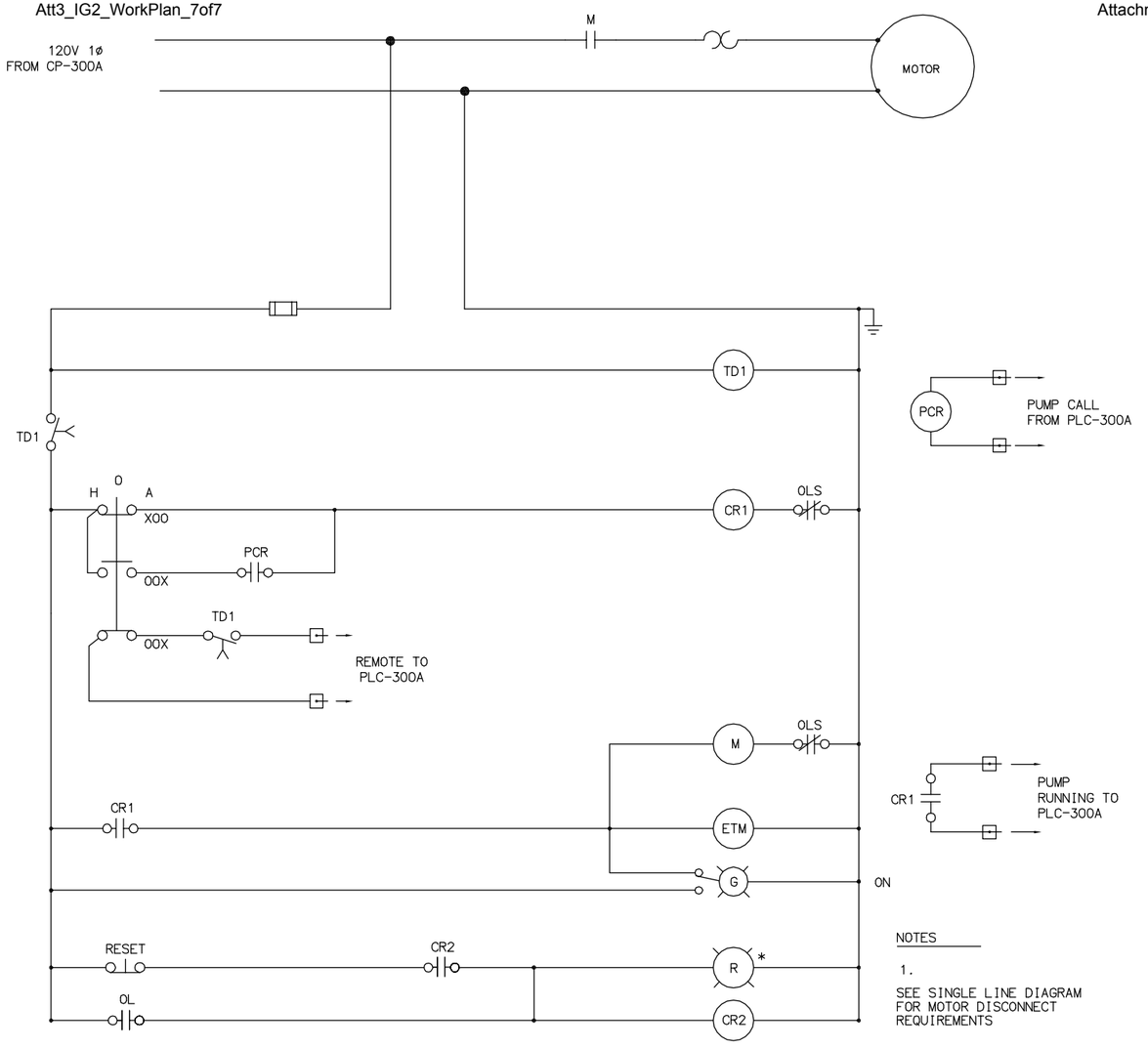

NOTES

1.

SEE SINGLE LINE DIAGRAM FOR MOTOR DISCONNECT REQUIREMENTS

SAMPLE PUMP SCHEMATIC

NTS (04-MFWW-P-1061,04-FLW-P-0540, -0550)

2 / –

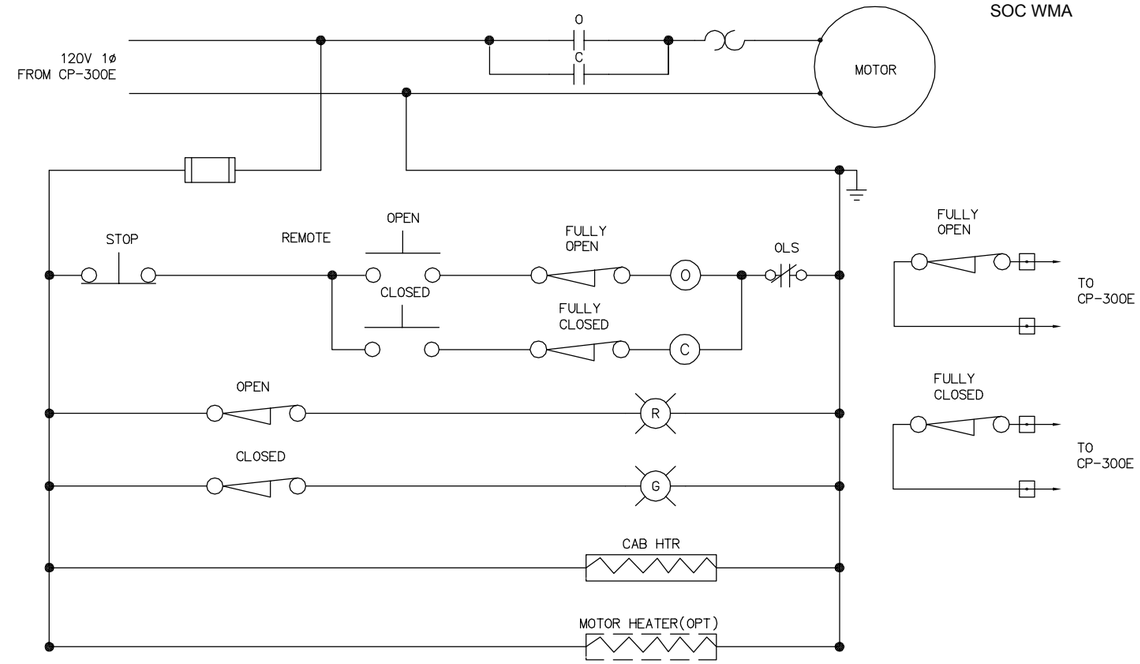

OPEN/CLOSE MOTOR OPERATED VALVE SCHEMATIC

NTS (MOV-0503, MOV-0504, MOV-0505, MOV-0513, MOV-0514, MOV-0515)
REMOTE CONTROL STATION REQUIRED (LOCATED IN CP-300E)

1 / –

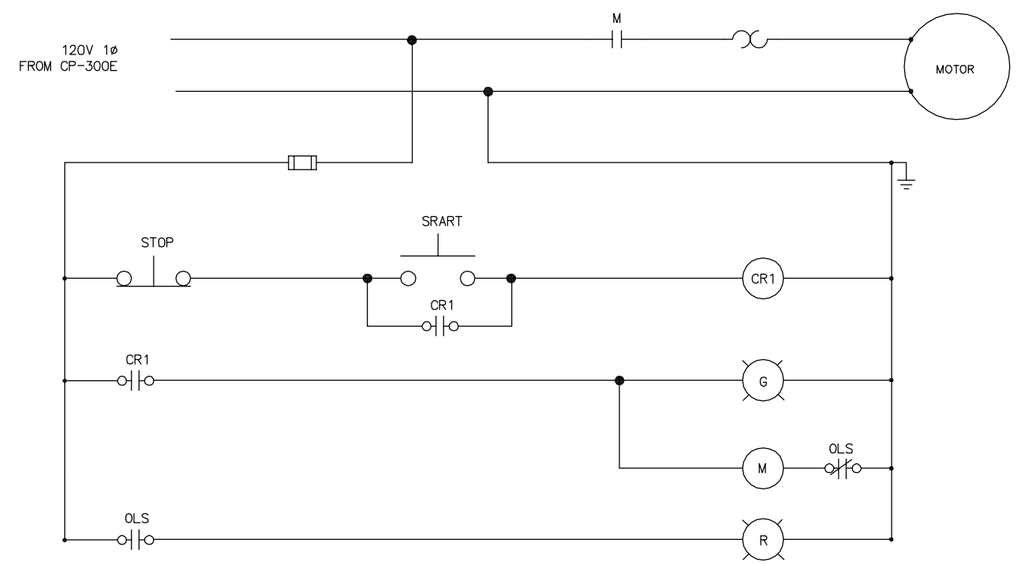

CLEANING PUMP SCHEMATIC

NTS (03-UCP-P-0522, -0523)

3 / –

EQUIPMENT TAG NUMBERS ON THIS DRAWING ARE PRECEDED W/ **03-FLW-** UNLESS OTHERWISE LABELED

No.	DATE	REVISIONS	APPROVED

DESIGNED: YPS
DRAWN: YPS
CHECKED: RVT

RBF CONSULTING

carollo

IRVINE RANCH WATER DISTRICT

RHONDA V. TIEJERINA	REE NO. 15473	ELECTRICAL ENGINEER	DATE
CINDY MILLER	RCE NO. 58116	PROJECT MANAGER	DATE
PATRICIA UEMATSU	RCE NO. 36762	PRINCIPAL ENGINEER	DATE

IRVINE RANCH WATER DISTRICT
BAKER WATER TREATMENT PLANT
PROJECT NO. 11218

TREATMENT BUILDING SCHEMATIC CONTROL DIAGRAM VII

DRAWING **E332**

SHEET **507** OF **632**

FILENAME: 6232-E332.dwg
LAST UPDATED: 01/30/2012 11:56 AM
LAST SAVED BY: ypsee

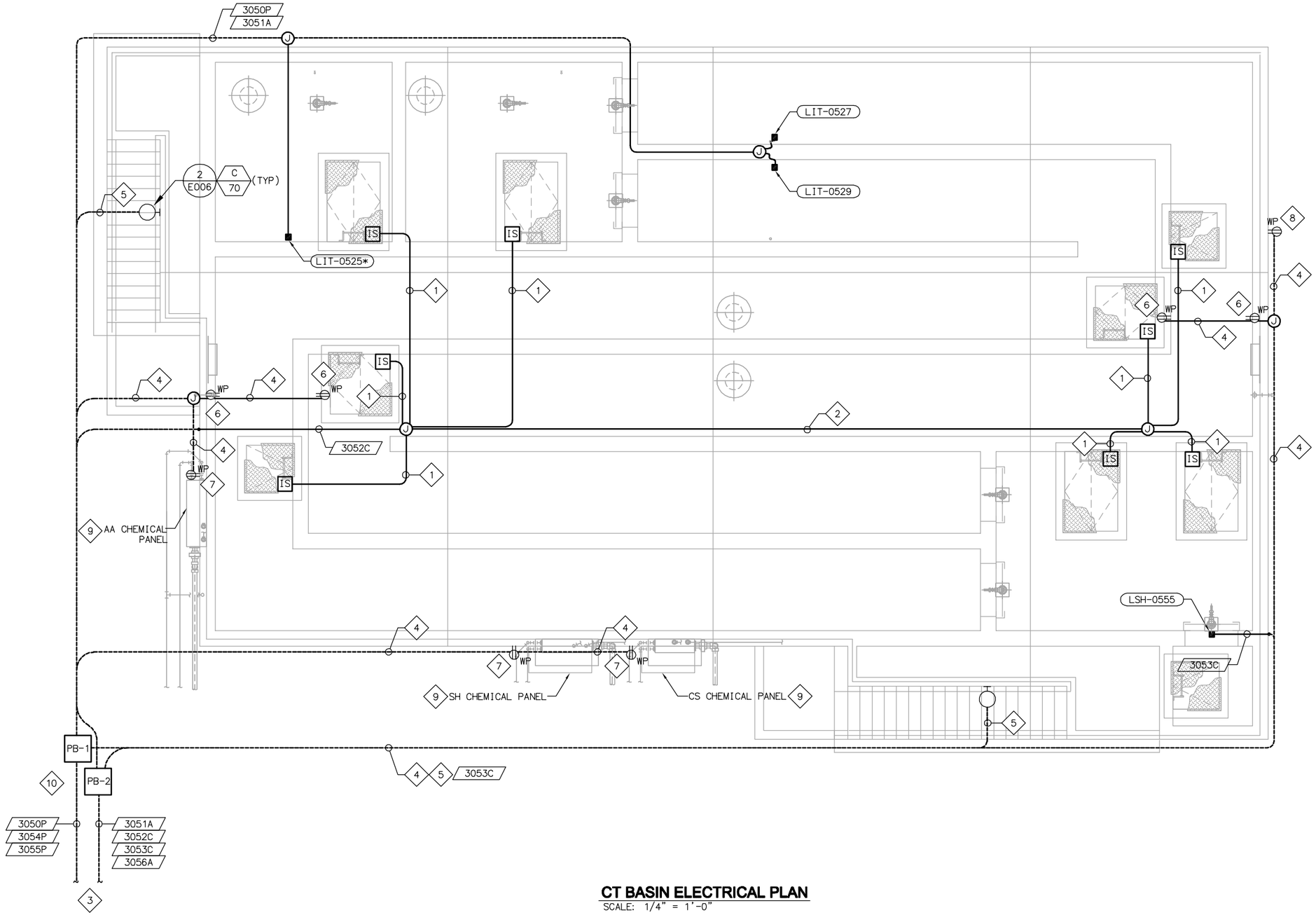

CT BASIN ELECTRICAL PLAN

SCALE: 1/4" = 1'-0"

NOTES:

1. 1"C - 2#14 FOR HATCH INTRUSION SWITCH.
2. 1"C - 8#14 FOR HATCH INTRUSION SWITCHES.
3. TO ELECTRICAL ROOM AT TREATMENT BUILDING.SEE DWG E011 & E309 FOR CONTINUATION.
4. 1"C - 2#10, 1#10G FROM PB-1 TO RECEPTACLES
5. 1"C - 2#1-, 1#1-G FROM PB-1 TO STAIR WAY LIGHTS.
6. PROVIDE AND INSTALL A GANG OF 2 GFI WEATHERPROOF RECEPTACLE WITH IN-USE COVER ON THE TOP OF CT BASIN AS SHOWN FOR PORTABLE SUMP PUMP.
7. PROVIDE AND INSTALL A DUPLEX GFI WEATHERPROOF RECEPTACLE WITH IN-USE COVER AT GRADE LEVEL ADJACENT TO CHEMICAL PANELS AS SHOWN.
8. PROVIDE AND INSTALL A GANG OF 2 GFI WEATHERPROOF RECEPTACLE WITH IN-USE COVER AT GRADE LEVEL OF CT BASIN AS SHOWN.
9. SEE DWG M401 FOR CHEMICAL PANELS DETAILS
10. PROVIDE AND INSTALL A 24" X 24" PULLBOX AS SHOWN.

*EQUIPMENT TAG NUMBER ARE PRECEDED WITH 04-FLW-

EQUIPMENT TAG NUMBERS ON THIS DRAWING ARE PRECEDED W/ **04-CT-** UNLESS OTHERWISE LABELED

No.	DATE	REVISIONS	APPROVED

DESIGNED: YPS
DRAWN: YPS
CHECKED: RVT

RBF CONSULTING

carollo

IRVINE RANCH WATER DISTRICT

RHONDA V. TIEJERINA	REE NO. 15473	ELECTRICAL ENGINEER	DATE
CINDY MILLER	RCE NO. 58116	PROJECT MANAGER	DATE
PATRICIA UEMATSU	RCE NO. 36762	PRINCIPAL ENGINEER	DATE

IRVINE RANCH WATER DISTRICT
BAKER WATER TREATMENT PLANT
PROJECT NO. 11218

CT BASIN ELECTRICAL PLAN

DRAWING **E401**

SHEET **508** OF **632**

LAST SAVED BY: ypsee LAST UPDATED: 01/23/2012 10:10 AM FILENAME: 6232-E401.dwg

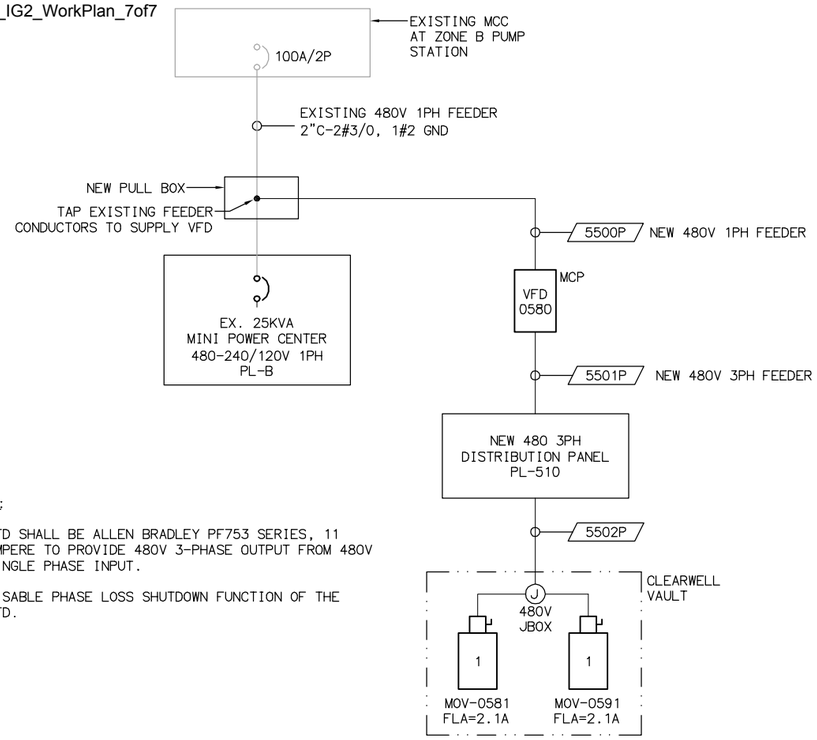

NOTES:

1. VFD SHALL BE ALLEN BRADLEY PF753 SERIES, 11 AMPERE TO PROVIDE 480V 3-PHASE OUTPUT FROM 480V SINGLE PHASE INPUT.
2. DISABLE PHASE LOSS SHUTDOWN FUNCTION OF THE VFD.

CLEARWELL VALVE VAULT SINGLE LINE DIAGRAM

N.T.S.

CONDUIT SCHEDULE

PLAN SYMBOL #	CONDUIT QTY	CONDUIT SIZE	CONDUCTOR QTY.& SIZE	INSULATION RATING	LOCATION FROM	LOCATION TO	DWG. NOS	REMARKS
5500P	1	2"	3#4/0, 1#1G	600V	NEW PULL BOX	VFD-0580	E501,E503	
5501P	1	2"	3#4/0, 1#1G		VFD-0580	PL-510	E501,E503	
5502P	1	1"	6#10, 1#10G		PL-510	480V JBOX	E501,E503	MOV-0581,MOV-0591
5503C	1	2"	16#14, 8#14 SPARE		CP-500C	CONTROL JBOX	E503	MOV-0581,MOV-0591
5504A	1	2"	4(2/C#16) SHLD		CP-500C	CONTROL JBOX	E503	MOV-0581,MOV-0591
5505P	1	1"	6#10, 1#10G		PL-B	120V JBOX 1	E503	LTGS, RECPT, SF
5506C	1	1"	8#14, 4#14 SPARE		CP-500C	PULL BOX	E502,E503	LSLL-0586,LSHH-0586, LSLL-0596,LSHH-0596
5507A	1	1"	2(2/C#16) SHLD		CP-500C	PULL BOX	E502,E503	LIT-0585,LIT-0595
5508P	1	1"	CONDUIT ONLY		PL-B	PULL BOX	E502,E503	FUTURE POWER
5509A	1	2"	DATA LINK		CP-500C	EXISTING CONTROL PANEL	E503	FUTURE COMMUNICATION
5510P	1	1"	2#10, 1#10G		CP-500C	EXISTING CONTROL PANEL	E503	UPS POWER
5511C	1	1"	6#14 SPARE		VFD-0580	CP-500C	E503	FUTURE MONITORING
5512C	1	1"	4#14		CP-500C	CONTROL JBOX	E503	VAULT HATCH INTRUSION

VOLTS 480V — PHASE 3 — WIRE 3 — PANEL PL-510 — LOCATION RMS BUILDING (EXTERIOR) — MAIN BREAKER 30A — BUS RATING 100A — MOUNTING: WALL

DESCRIPTION	LTS.	REC.	MISC.	VOLT-AMPS øA	VOLT-AMPS øB	VOLT-AMPS øC	BRKR. AMP	BRKR. P	CIR.	BUS A B C	CIR.	BRKR. P	BRKR. AMP	VOLT-AMPS øA	VOLT-AMPS øB	VOLT-AMPS øC	LTS.	REC.	MISC.	DESCRIPTION
MOV-0581				600				3	1		2	3								SPARE
			X		600		20		3		4		20							
						600		P	5		6	P								
MOV-0591				600				3	7		8	3								SPARE
			X		600		20		9		10		20							
						600		P	11		12	P								
SPACE								3	13		14	3								SPACE
							20		15		16		20							
								P	17		18	P								
SPACE								3	19		20	3								SPACE
							20		21		22		20							
								P	23		24	P								

SUBTOTAL 1200 1200 1200 — 0 0 0

LOAD øA 1200 øB 1200 øC 1200

LCL X .25 øA - øB - øC -

TOTAL øA 1200 øB 1200 øC 1200

PANEL TOTAL 3600 VOLT-AMPS. = 4.33 AMPS

VOLTS 120/240V — PHASE 1 — WIRE 3 — PANEL PL-B (EX. MINI POWER CENTER) — LOCATION RMS BUILDING (INTERIOR) — MAIN BREAKER 125A — BUS RATING N/A — MOUNTING: WALL

DESCRIPTION	LTS.	REC.	MISC.	VOLT-AMPS øA	VOLT-AMPS øB	BRKR. AMP	BRKR. P	CIR.	BUS A B	CIR.	BRKR. P	BRKR. AMP	VOLT-AMPS øA	VOLT-AMPS øB	LTS.	REC.	MISC.	DESCRIPTION
CHILLER (EX.)			X	1700		20	2	1		2	2	60	6000				X	CP-100 (EX.)
					1700		P	3		4	P			6000				
RMS BUILDING RECEPTACLES (EX.)		X		900		20	1	5		6	1	20	320		X			RMS BUILDING LIGHTS (EX.)
SF-2501 (N)			X		600	20	1	7		8	1	20		1176			X	RMS BUILDING EXHAUST FAN (EX.)
CLEARWELL VAULT RECEPTACLES (N)		X		720		20	1	9		10	1	20	186		X			CLEARWELL VAULT LIGHTS (N)
SPARE						20	1	11		12	1	20						SPACE
SPARE						20	1	13		14	1	20						SPACE
SPARE						20	1	15		16	1	20						SPACE
SPACE						20	1	17		18	1	20						SPACE
SPACE						20	1	19		20	1	20						SPACE
SPACE						20	1	21		22	1	20						SPACE
SPACE						20	1	23		24	1	20						SPACE

SUBTOTAL 3320 2300 — 6506 7176

LOAD øA 9,826 øB 9,476

LCL X .25 øA - øB -

TOTAL øA 9,826 øB 9,476

PANEL TOTAL 19,302 VOLT-AMPS. = 80.43 AMPS@240V

HIGH LEG 9,826 VOLT-AMPS. = 81.88 AMPS@120V

NOTE: VOLT-AMPS OF EXISTING RMS BUILDING LOADS ARE APPROXIMATE BASED ON RECORD DRAWINGS.

EQUIPMENT TAG NUMBERS ON THIS DRAWING ARE PRECEDED W/ **05-PW-** UNLESS OTHERWISE LABELED

No.	DATE	REVISIONS	APPROVED

DESIGNED: YPS
DRAWN: YPS
CHECKED: RVT

RBF CONSULTING — carollo — IRVINE RANCH WATER DISTRICT

RHONDA V. TIEJERINA REE NO. 15473 ELECTRICAL ENGINEER DATE
CINDY MILLER RCE NO. 58116 PROJECT MANAGER DATE
PATRICIA UEMATSU RCE NO. 36762 PRINCIPAL ENGINEER DATE

IRVINE RANCH WATER DISTRICT
BAKER WATER TREATMENT PLANT
PROJECT NO. 11218

PRODUCT WATER CLEARWELLS SINGLE LINE DIAGRAM AND SCHEDULES

DRAWING **E501**
SHEET **509** OF **632**

FILENAME:6232-E501.dwg LAST UPDATED: 01/20/2012 09:13 AM LAST SAVED BY: ypsee

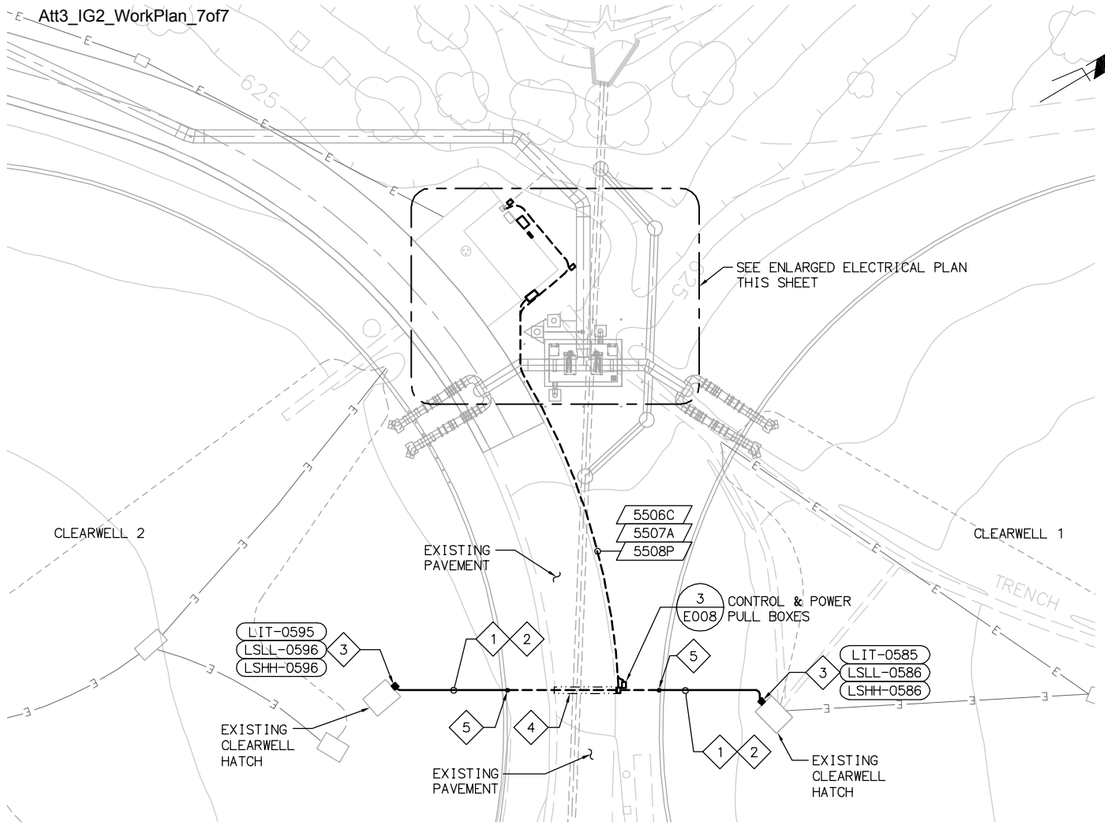

CLEARWELLS ELECTRICAL SITE PLAN

SCALE: 1"=20'-0"

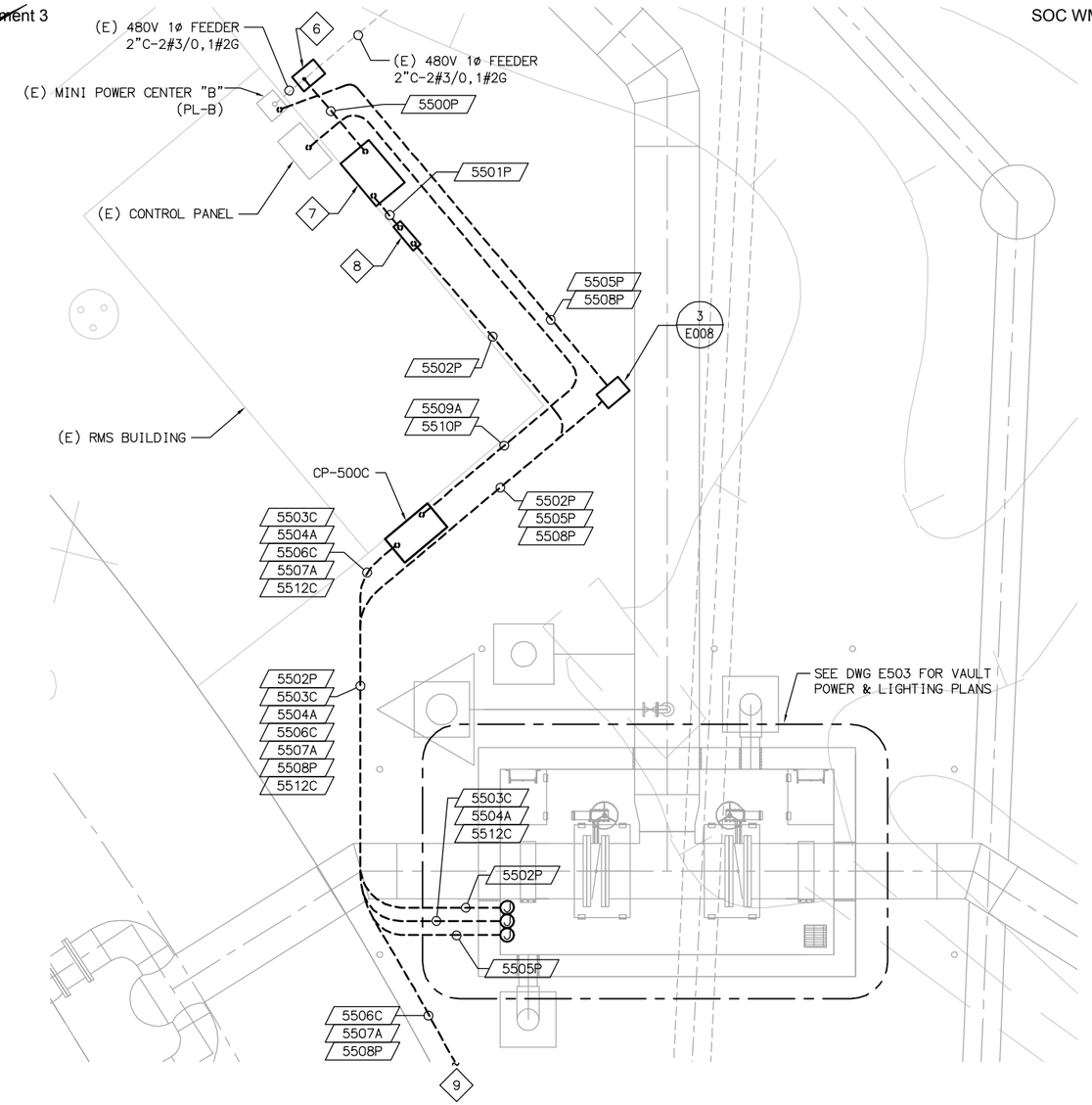

CLEARWELLS ENLARGED ELECTRICAL PLAN

SCALE: 1/4"=1'-0"

NOTES:

1. 1"C-4#14 TO LSLL & LSHH
2. 1"C-(2/C#16) SHLD TO LIT
3. INSTALL LIT, LSLL & LSHH NEAR CLEARWELL HATCH AS SHOWN. VERIFY LOCATION PRIOR TO INSTALLATION.
4. CONTRACTOR SHALL SAWCUT EXISTING PAVEMENT, INSTALL NEW CONDUIT AND WIRING, AND PATCH AND REPAIR PAVEMENT.
5. TRANSITION FROM UNDERGROUND TO ABOVE GRADE CONDUIT AT EDGE OF CLEARWELL TANK.
6. INSTALL NEW 11"x17" PULL BOX. INTERCEPT EXISTING FEEDER CONDUCTORS & CONDUIT AND ROUTE THROUGH PULL BOX. TAP NEW CONDUCTORS TO EXISTING FEEDER CONDUCTORS IN PULL BOX.
7. VFD-0580 - ALLEN BRADLEY PF753 SERIES, 480V 1ø INPUT AND 480V 3ø OUTPUT IN NEMA 3R ENCLOSURE
8. PL-510 - 480V 3ø DISTRIBUTION PANELBOARD IN NEMA 3R ENCLOSURE. SEE PANEL SCHEDULE ON DWG E501.
9. SEE CLEARWELLS ELECTRICAL SITE PLAN FOR CONTINUATION.

EQUIPMENT TAG NUMBERS ON THIS DRAWING ARE PRECEDED W/ **05-PW-** UNLESS OTHERWISE LABELED

No.	DATE	REVISIONS	APPROVED

DESIGNED: YPS
DRAWN: YPS
CHECKED: RVT

RBF CONSULTING

carollo

IRVINE RANCH WATER DISTRICT

RHONDA V. TIEJERINA REE NO. 15473 ELECTRICAL ENGINEER DATE
CINDY MILLER RCE NO. 58116 PROJECT MANAGER DATE
PATRICIA UEMATSU RCE NO. 36762 PRINCIPAL ENGINEER DATE

IRVINE RANCH WATER DISTRICT
BAKER WATER TREATMENT PLANT
PROJECT NO. 11218

PRODUCT WATER CLEARWELLS ELECTRICAL PLAN

DRAWING **E502**

SHEET **510** OF **632**

LAST SAVED BY: ypsee LAST UPDATED: 01/20/2012 10:04 AM FILENAME:6232-E502.dwg

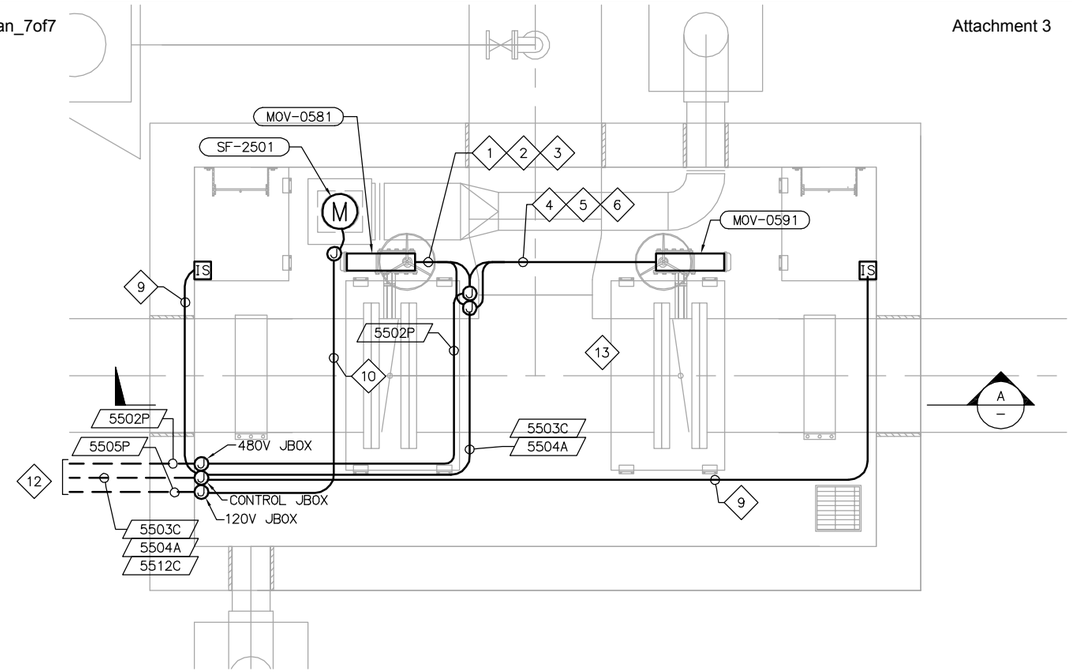

VALVE VAULT POWER PLAN

SCALE: 1/2" = 1'-0"

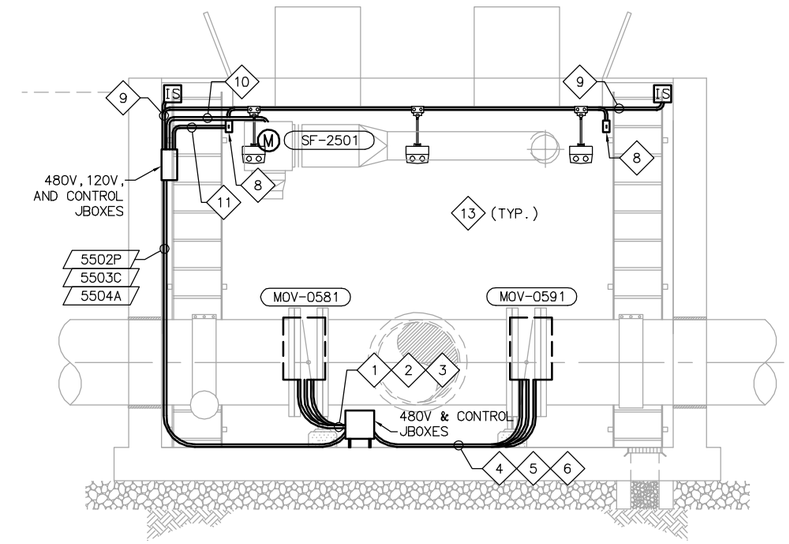

VALVE VAULT SECTION

N.T.S.

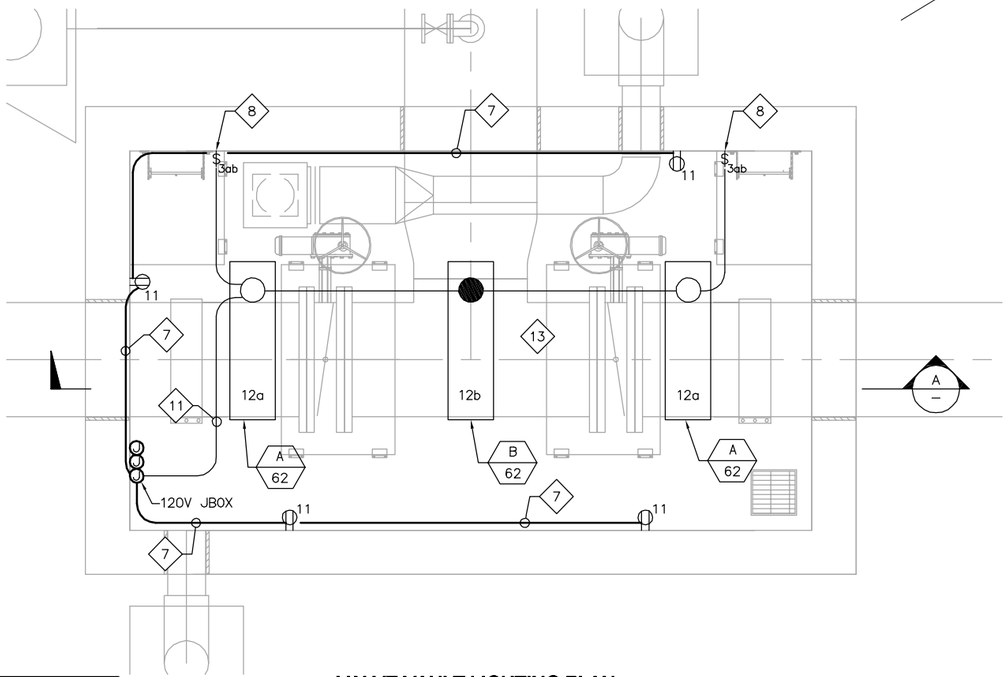

VALVE VAULT LIGHTING PLAN

SCALE: 1/2" = 1'-0"

NOTES:

1. 1"C - 3#10, 1#10G FROM 480V JBOX MOV-0581
2. 1"C - 8#14, 4#14 SPARE FROM CONTROL JBOX TO MOV-0581
3. 1"C - 2(2/C#16) SHLD FROM CONTROL JBOX TO MOV-0581
4. 1"C - 3#10, 1#10G FROM 480V JBOX MOV-0591
5. 1"C - 8#14, 4#14 SPARE FROM CONTROL JBOX TO MOV-0591
6. 1"C - 2(2/C#16) SHLD FROM CONTROL JBOX TO MOV-0591
7. 1"C - 2#10, 1#10G FROM 120V JBOX TO VAULT RECEPTACLES
8. INSTALL LIGHT SWITCH 6" BELOW VAULT CEILING NEXT TO HATCH LADDER
9. 1"C - 2#14 FROM CONTROL JBOX TO EACH INTRUSION SWITCH
10. 1"C - 2#10, 1#10G FROM 120V JBOX TO SF-2501
11. 1"C - 2#10, 1#10G FROM 120V JBOX TO LIGHT SWITCH
12. SEE DRAWING E502 FOR CONTINUATION
13. ALL CONDUITS SHOWN IN THE CLEARWELL VAULT ARE DIAGRAMMATIC ONLY. CONDUIT SHALL BE INSTALLED BASED ON FIELD CONDITIONS. FIELD RELOCATE CONDUITS IF REQUIRED. CONTRACTOR TO SUBMIT DETAILED CONDUIT LAYOUT FOR ENGINEER APPROVAL PRIOR TO INSTALLATION.

EQUIPMENT TAG NUMBERS ON THIS DRAWING ARE PRECEDED W/ **05-PW-** UNLESS OTHERWISE LABELED

No.	DATE	REVISIONS	APPROVED

DESIGNED: YPS
DRAWN: YPS
CHECKED: RVT

RBF CONSULTING

carollo

IRVINE RANCH WATER DISTRICT

RHONDA V. TIEJERINA REE NO. 15473 ELECTRICAL ENGINEER DATE
CINDY MILLER RCE NO. 58116 PROJECT MANAGER DATE
PATRICIA UEMATSU RCE NO. 36762 PRINCIPAL ENGINEER DATE

IRVINE RANCH WATER DISTRICT
BAKER WATER TREATMENT PLANT
PROJECT NO. 11218

PRODUCT WATER CLEARWELLS VAULT ELECTRICAL PLAN & SECTION

DRAWING **E503**
SHEET 511 OF 632

FILENAME: 6232-E503.dwg
LAST UPDATED: 01/20/2012 10:03 AM
LAST SAVED BY: ypsee

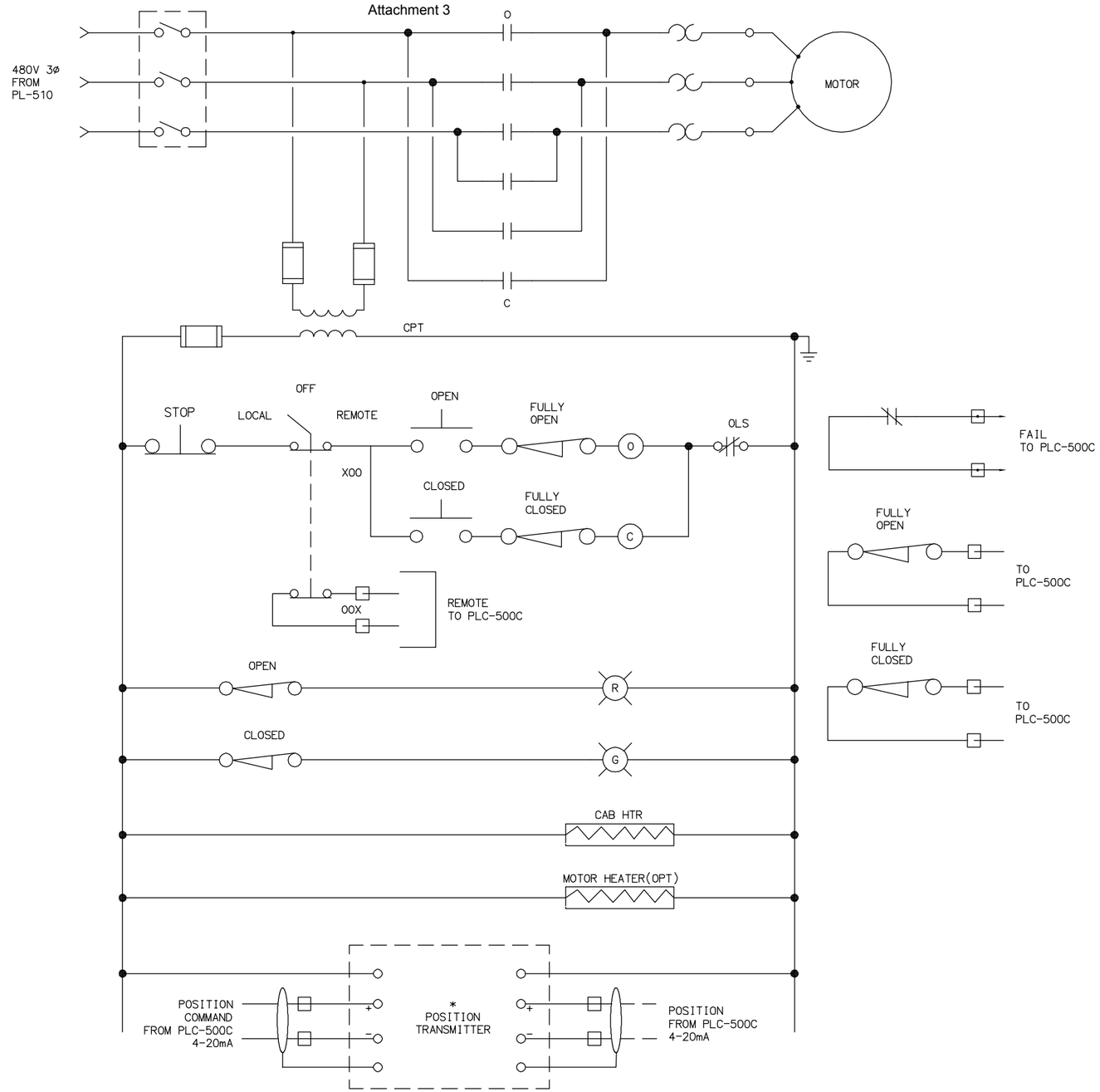

MODULATING MOTOR OPERATOR VALVE SCHEMATIC

2
–

NTS (MOV-0581 & MOV-0591. REMOTE CONTROL STATION REQUIRED)

EQUIPMENT TAG NUMBERS ON THIS DRAWING ARE PRECEDED W/ **05-PW-** UNLESS OTHERWISE LABELED

No.	DATE	REVISIONS	APPROVED

DESIGNED: YPS
DRAWN: YPS
CHECKED: RVT

RBF CONSULTING

carollo

IRVINE RANCH WATER DISTRICT

RHONDA V. TIEJERINA REE NO. 15473 ELECTRICAL ENGINEER DATE
CINDY MILLER RCE NO. 58116 PROJECT MANAGER DATE
PATRICIA UEMATSU RCE NO. 36762 PRINCIPAL ENGINEER DATE

IRVINE RANCH WATER DISTRICT
BAKER WATER TREATMENT PLANT
PROJECT NO. 11218

PRODUCT WATER CLEARWELLS SCHEMATIC CONTROL DIAGRAM

DRAWING
E504
SHEET
512 OF **632**

FILENAME: 6232-E504.dwg
LAST UPDATED: 01/19/2012 01:58 PM
LAST SAVED BY: ypsee

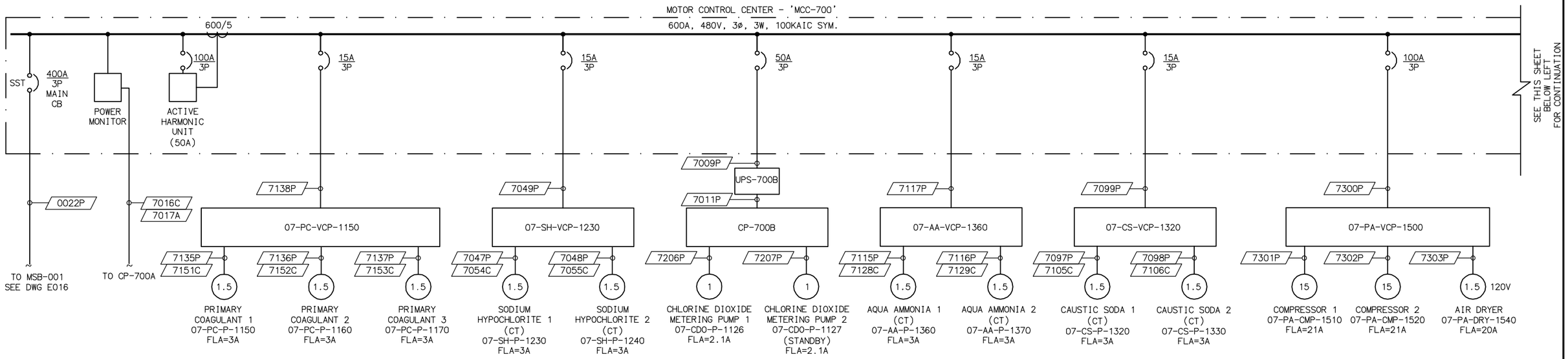

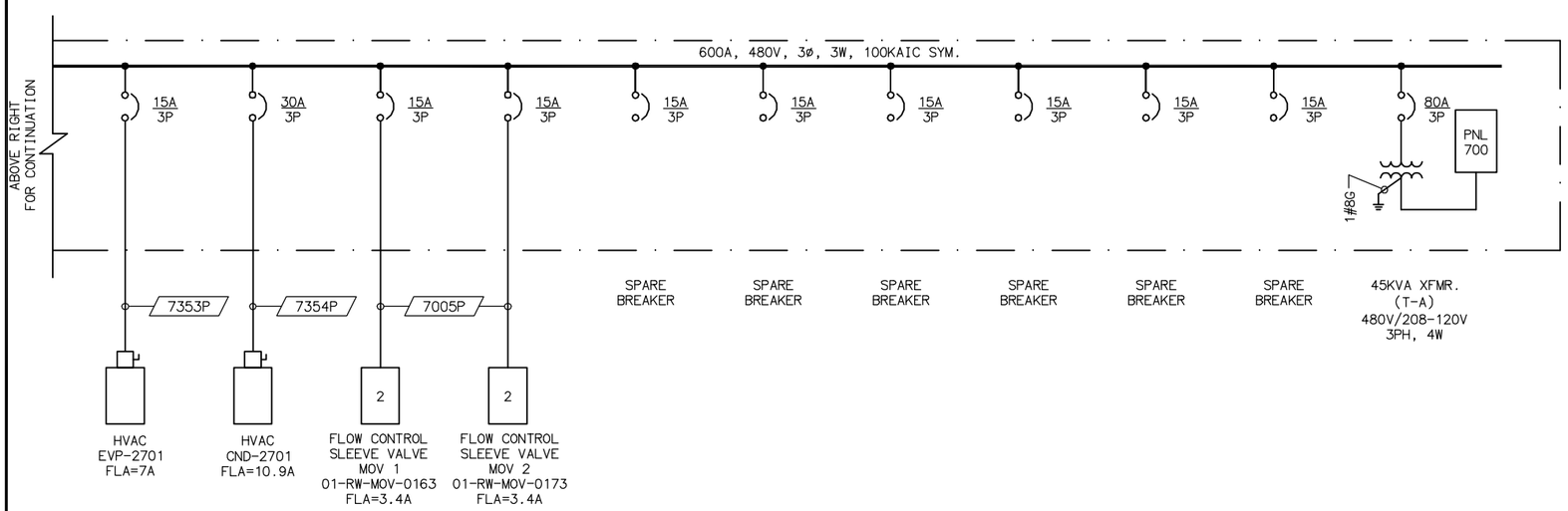

MCC-700

LOAD SCHEDULE

EQUIPMENT	HP	F.L. AMPS CONNECTED	F.L. AMPS RUNNING	F.L. AMPS GENERATOR
PRIMARY COAGULANT 1	1.5	3	3	3
PRIMARY COAGULANT 2	1.5	3	3	3
PRIMARY COAGULANT 3	1.5	3	3	-
SODIUM HYPOCHLORITE 1-CT	1.5	3	3	3
SODIUM HYPOCHLORITE 2-CT	1.5	3	3	-
CP-700B	-	30	30	30
AQUA AMMONIA 1-CT	1.5	3	3	3
AQUA AMMONIA 2-CT	1.5	3	3	-
CAUSTIC SODA 1-CT	1.5	3	3	3
CAUSTIC SODA 2-CT	1.5	3	3	-
AIR COMPRESSOR 1	15	21	21	21
AIR COMPRESSOR 2	15	21	21	-
EVP-2701	-	-	7	7
CND-2701	-	-	10.9	10.9
FLOW CONTROL SLEEVE VALVE MOV1	2	3.4	3.4	3.4
FLOW CONTROL SLEEVE VALVE MOV2	2	3.4	3.4	3.4
45KVA XFMR	-	54	54	54
25% LARGEST LOAD		5	5	-
TOTAL LOADS		169	166.9	128.9

SINGLE LINE DIAGRAM

N.T.S.

FILENAME: 6232-E701.dwg LAST UPDATED: 01/16/2012 01:39 PM LAST SAVED BY: ypsee

No.	DATE	REVISIONS	APPROVED

DESIGNED: YPS
DRAWN: YPS
CHECKED: RVT

RBF CONSULTING

carollo

IRVINE RANCH WATER DISTRICT

RHONDA V. TIEJERINA REE NO. 15473 ELECTRICAL ENGINEER DATE
CINDY MILLER RCE NO. 58116 PROJECT MANAGER DATE
PATRICIA UEMATSU RCE NO. 36762 PRINCIPAL ENGINEER DATE

IRVINE RANCH WATER DISTRICT
BAKER WATER TREATMENT PLANT
PROJECT NO. 11218

CHEMICAL BUILDING SINGLE LINE DIAGRAM

DRAWING E701

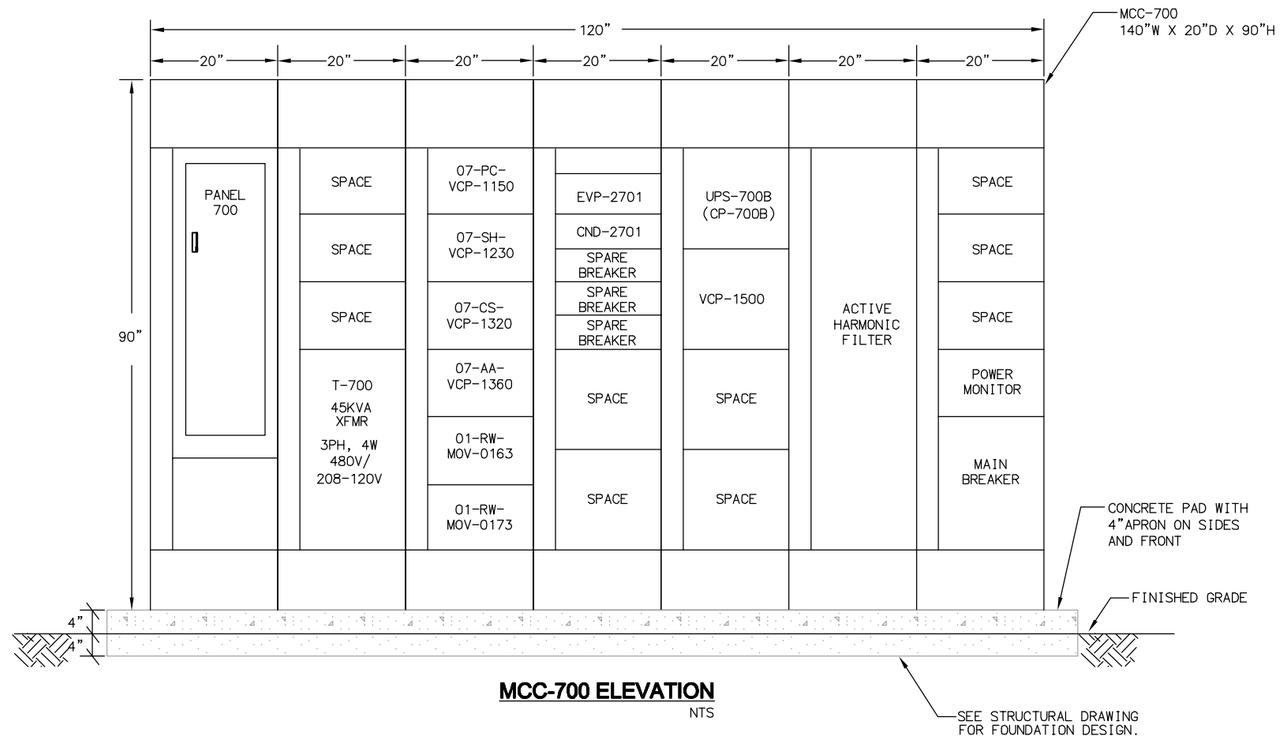

MCC-700 ELEVATION
NTS

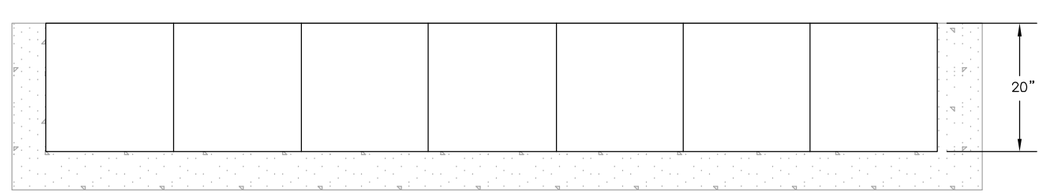

MCC-700 FLOOR PLAN
NTS

FILENAME: 6232-E702.dwg
LAST UPDATED: 01/16/2012 01:39 PM
LAST SAVED BY: ypsee

No.	DATE	REVISIONS	APPROVED

DESIGNED: YPS
DRAWN: YPS
CHECKED: RVT

RBF CONSULTING
carollo
IRVINE RANCH WATER DISTRICT

RHONDA V. TIEJERINA REE NO. 15473 ELECTRICAL ENGINEER DATE
CINDY MILLER RCE NO. 58116 PROJECT MANAGER DATE
PATRICIA UEMATSU RCE NO. 36762 PRINCIPAL ENGINEER DATE

IRVINE RANCH WATER DISTRICT
BAKER WATER TREATMENT PLANT
PROJECT NO. 11218

CHEMICAL BUILDING EQUIPMENT ELEVATIONS

DRAWING
E702
SHEET
528 OF **632**

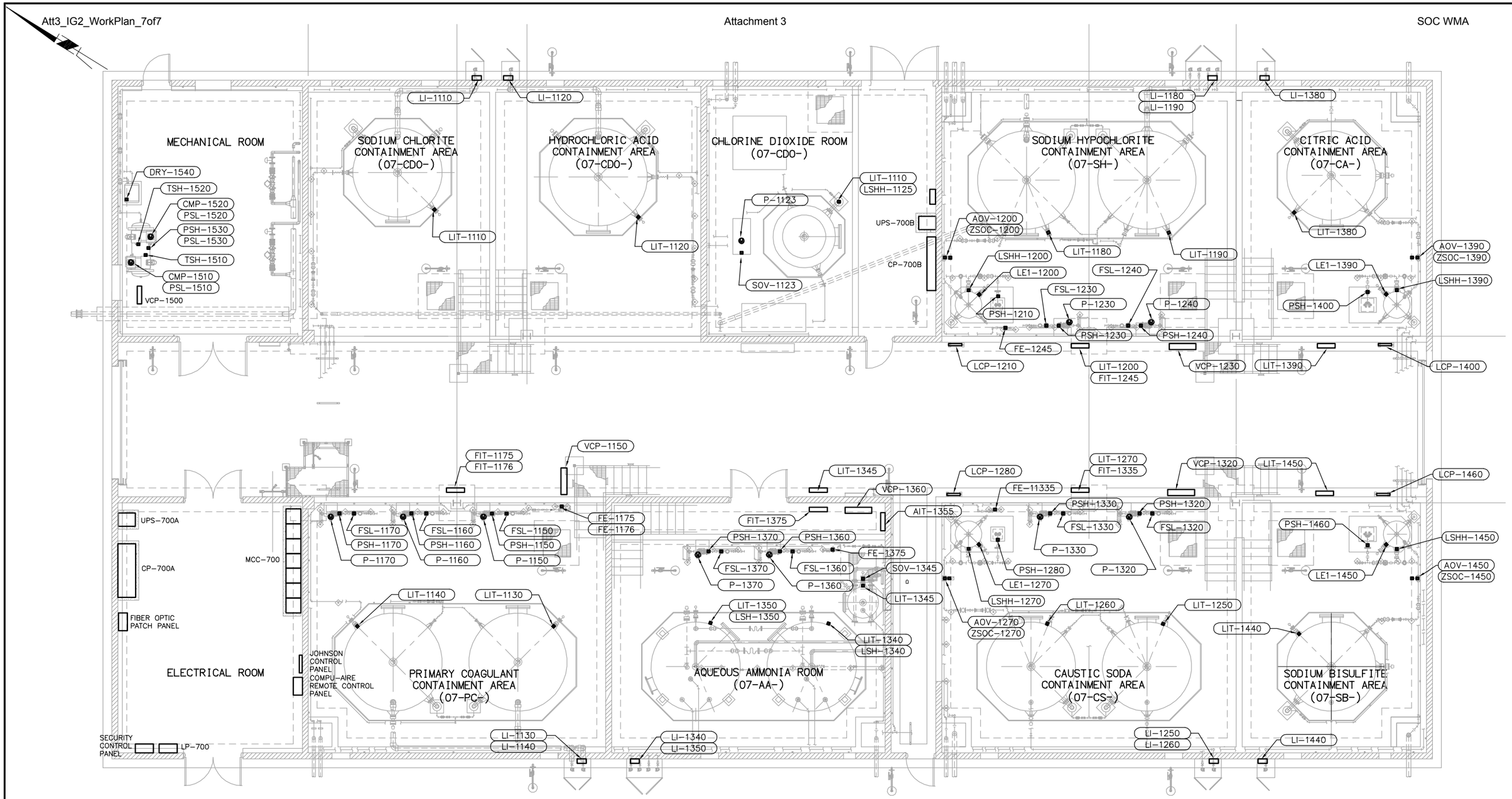

OVERALL CHEMICAL BUILDING PLAN

SCALE: 3/16" = 1'-0"

LAST SAVED BY: ypsee LAST UPDATED: 01/23/2012 11:09 AM FILENAME: 6232-E703.dwg

No.	DATE	REVISIONS	APPROVED

DESIGNED: YPS
DRAWN: YPS
CHECKED: RVT

RBF CONSULTING

carollo

IRVINE RANCH WATER DISTRICT

RHONDA V. TIEJERINA	REE NO. 15473	ELECTRICAL ENGINEER	DATE
CINDY MILLER	RCE NO. 58116	PROJECT MANAGER	DATE
PATRICIA UEMATSU	RCE NO. 36762	PRINCIPAL ENGINEER	DATE

IRVINE RANCH WATER DISTRICT
BAKER WATER TREATMENT PLANT
PROJECT NO. 11218

CHEMICAL BUILDING OVERALL PLAN

DRAWING E703

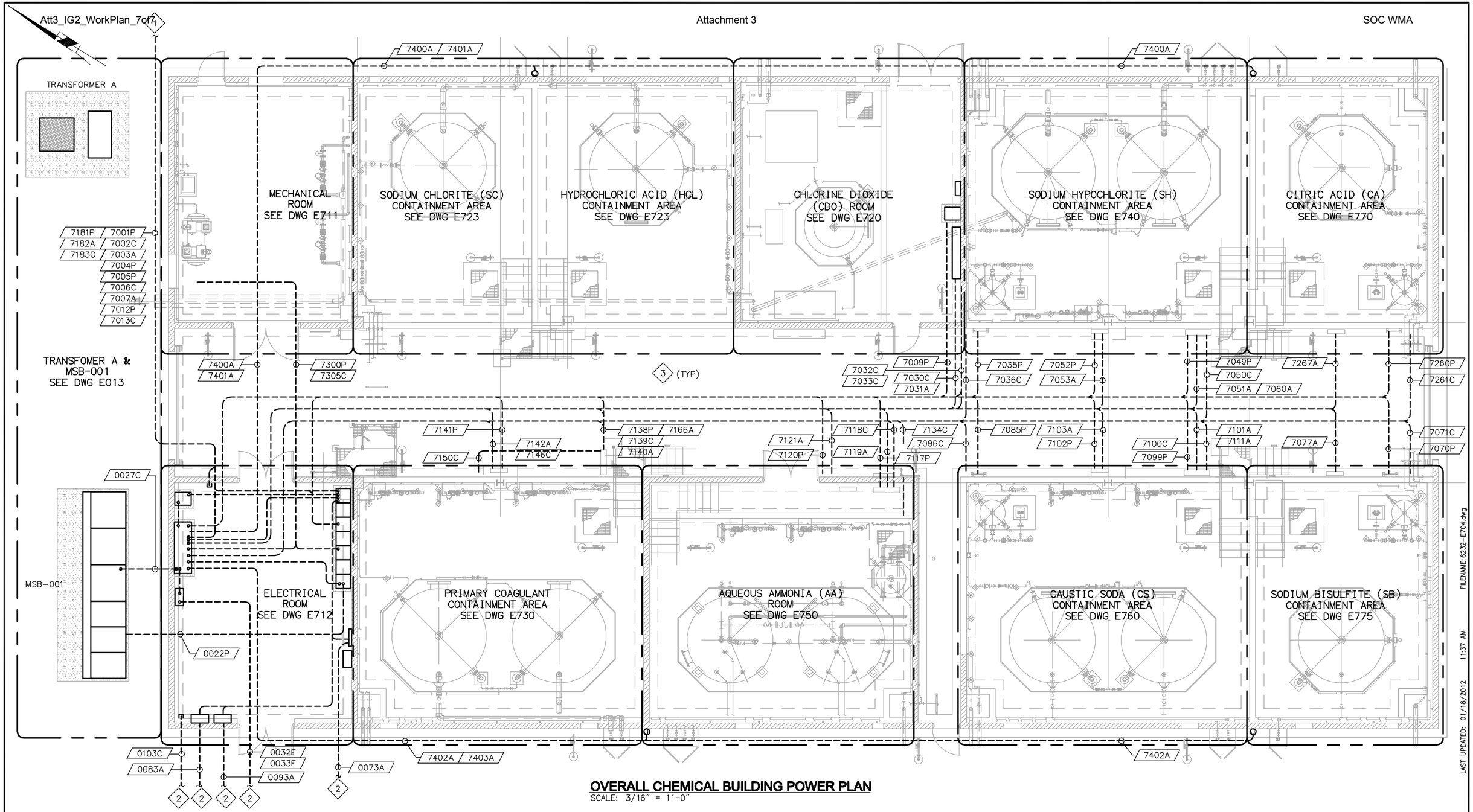

OVERALL CHEMICAL BUILDING POWER PLAN

SCALE: 3/16" = 1'-0"

NOTES:

1. SEE E011 FOR CONTINUATION
2. TO COMMUNICATION PULLBOX 1. SEE DWG E011 FOR CONTINUATION.
3. CONDUIT ROUTING SHOWN ARE DIAGRAMMATIC ONLY. CONTRACTOR TO SUBMIT CONDUIT LAYOUT FOR ENGINEER APPROVAL PRIOR TO INSTALLATION.

No.	DATE	REVISIONS	APPROVED

DESIGNED: YPS
DRAWN: YPS
CHECKED: RVT

RBF CONSULTING

carollo

IRVINE RANCH WATER DISTRICT

RHONDA V. TIEJERINA REE NO. 15473 ELECTRICAL ENGINEER DATE
CINDY MILLER RCE NO. 58116 PROJECT MANAGER DATE
PATRICIA UEMATSU RCE NO. 36762 PRINCIPAL ENGINEER DATE

IRVINE RANCH WATER DISTRICT
BAKER WATER TREATMENT PLANT
PROJECT NO. 11218

CHEMICAL BUILDING OVERALL POWER PLAN

DRAWING E704

SHEET 530 OF 632

FILENAME: 6232-E704.dwg
LAST UPDATED: 01/18/2012 11:37 AM
LAST SAVED BY: ypsee

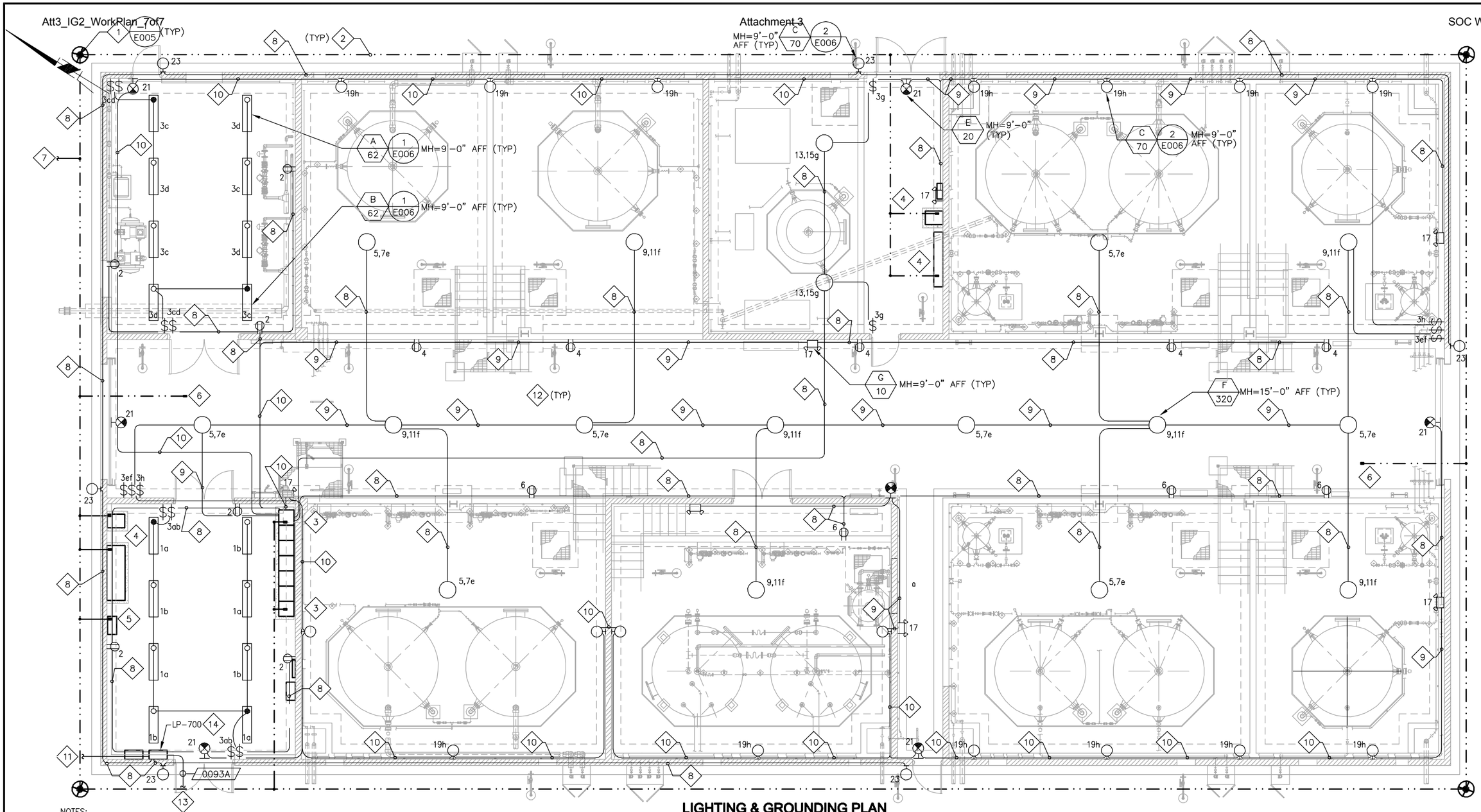

LIGHTING & GROUNDING PLAN

SCALE: 3/16" = 1'-0"

NOTES:

1. PROVIDE A CAST IRON LID FOR GROUND ROD WELLS.
2. #4/0 BARE COPPER GROUNDING CONDUCTOR.
3. ROUTE #4/0 GROUNDING WIRE THROUGH SLAB AND CONNECT TO MCC-700.
4. ROUTE #4/0 GROUNDING WIRE TO CONTROL CABINET AND UPS ENCLOSURE
5. ROUTE #2 GROUND WIRE TO FIBER OPTIC PATCH PANEL.
6. ROUTE #4/0 GROUNDING WIRE AND CONNECT TO STRUCTURAL REBAR.
7. ROUTE #4/0 BARE COPPER GROUNDING CONDUCTOR TO MSB-500 GROUNDING SYSTEM. SEE DWG E013 FOR CONTINUATION.
8. 1"C - 2#10, 1#10G
9. 1"C - 4#10, 1#10G
10. 1"C - 6#10, 1#10G
11. 1"C - 6#10, 1#10G TO PERIMETER LIGHTS ZONE 1, ZONE 2 & ZONE 3.
12. ALL LIGHTS (EXIT, EMERGENCY, HIGH BAY, WALLPACK) & RECEPTACLES SHALL BE POWERED FROM PL-300. CONDUIT ROUTING SHOWN ARE DIAGRAMMATIC AND FOR REFERENCE ONLY. CONTRACTOR TO PROVIDE AND INSTALL A WORKABLE LIGHTING & RECEPTACLE SYSTEM AS SHOWN.
13. TO LP-200 LOCATED IN THE FEEDWATER ELECTRICAL ROOM. SEE DWG E011 & E208 FOR CONTINUATION.
14. SEE DWG E022 FOR CONNECTION DIAGRAM DETAILS.

No.	DATE	REVISIONS	APPROVED

DESIGNED: YPS
DRAWN: YPS
CHECKED: RVT

RBF CONSULTING
carollo
IRVINE RANCH WATER DISTRICT

RHONDA V. TIEJERINA	REE NO. 15473	ELECTRICAL ENGINEER	DATE
CINDY MILLER	RCE NO. 58116	PROJECT MANAGER	DATE
PATRICIA UEMATSU	RCE NO. 36762	PRINCIPAL ENGINEER	DATE

IRVINE RANCH WATER DISTRICT
BAKER WATER TREATMENT PLANT
PROJECT NO. 11218

CHEMICAL BUILDING
LIGHTING & GROUNDING PLAN

DRAWING E705
SHEET 531 OF 632

FILENAME: 6232-E705.dwg
LAST UPDATED: 01/18/2012 11:40 AM
LAST SAVED BY: ypsee

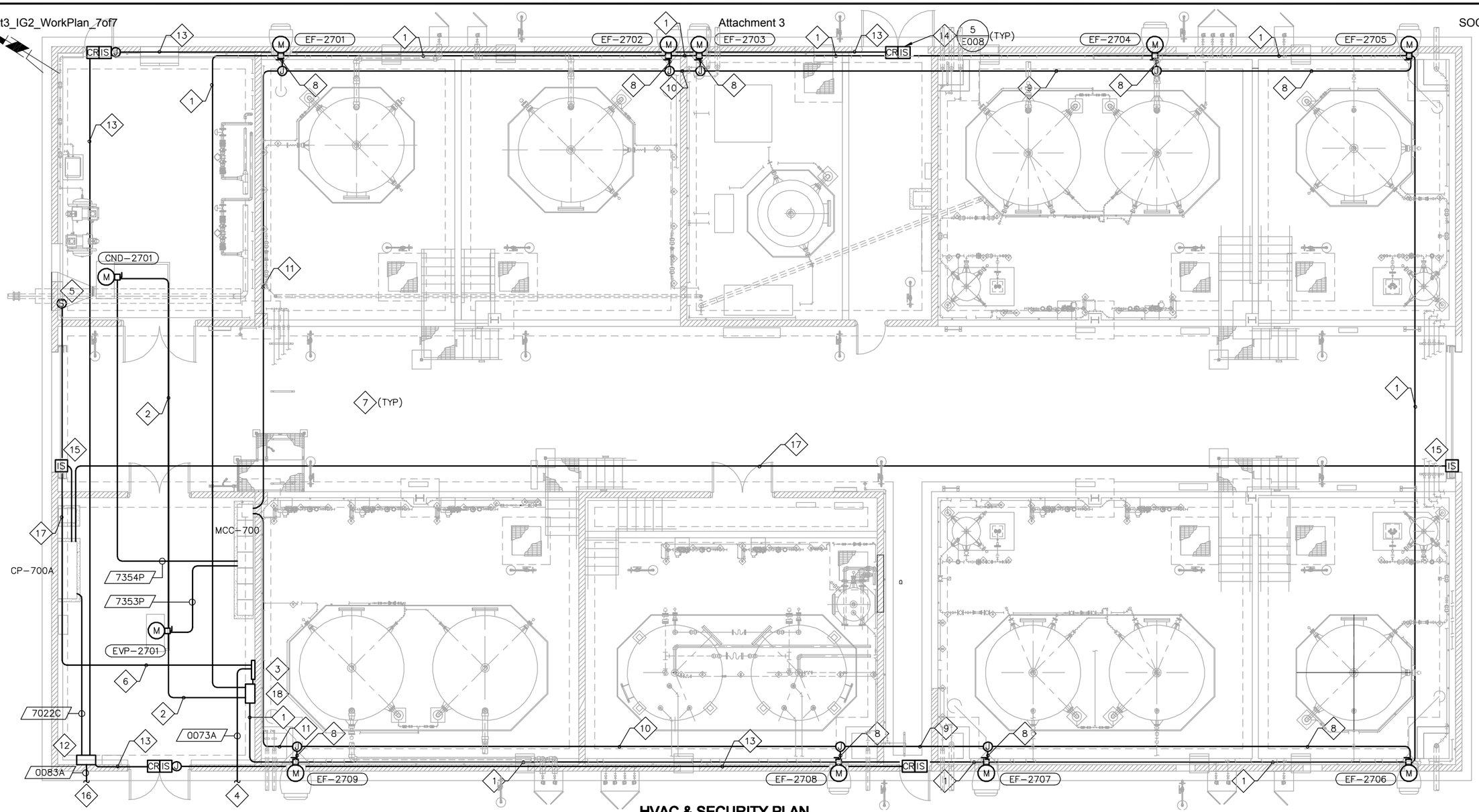

HVAC & SECURITY PLAN

SCALE: 3/16" = 1'-0"

NOTES:

1. 1" CONDUIT ONLY FROM EXHAUST FANS TO JOHNSON CONTROL PANEL. SEE DWG H006 & H007 FOR NUMBER OF WIRING REQUIRED FOR HVAC EQUIPMENT.
2. 1" CONDUIT ONLY FROM EVP & CND TO JOHNSON CONTROL PANEL. SEE DWG H006 & H007 FOR NUMBER OF WIRING REQUIRED FOR HVAC EQUIPMENT.
3. PROVIDE AND INSTALL A JOHNSON CONTROL PANEL AS SHOWN. SEE DWG H007 FOR DETAILS
4. TO JOHNSON CONTROL PANEL LOCATION IN FEEDWATER ELECTRICAL ROOM & TCWD PUMP STATION SEE DWG E011 FOR CONTINUATION.
5. ACOUSTICAL INTAKE LOUVERS PRESSURE SENSOR. SEE DWG H007 FOR DETAILS.
6. 1" CONDUIT ONLY FROM JOHNSON CONTROL PANEL TO ACOUSTICAL INTAKE LOUVERS PRESSURE SENSOR. SEE DWG H006 & H007 FOR NUMBER OF WIRING REQUIRED FOR HVAC EQUIPMENT.
7. ALL HVAC EQUIPMENT CONDUIT ROUTING SHOWN ARE DIAGRAMMATIC AND FOR REFERENCE ONLY. CONTRACTOR TO PROVIDE AND INSTALL A WORKABLE HVAC SYSTEM AS SHOWN. ALL JUNCTION BOX SHALL BE INSTALLED BASED ON FILED CONDITIONS. FIELD RELOCATED IF REQUIRED.
8. 1"C – 2#10, 1#10G JUNCTION BOX TO EXHAUST FAN
9. 1"C – 4#10, 1#10G TO PL-700 VIA JUNCTION BOX
10. 1"C – 6#10, 1#10G TO PL-700 VIA JUNCTION BOX
11. 1"C – 8#10, 1#10G TO PL-700 VIA JUNCTION BOX
12. PROVIDE AND INSTALL A SECURITY CONTROL PANEL AS SHOWN. THE SECURITY CONTROL PANEL SHALL CONSISTS OF HIRSCH CONTROLLER. SEE DWG E020 FOR CONTROL BLOCK DIAGRAM.
13. 1"C WITH POWER WIRING & 1"C WITH SHEILDED WIRING. SEE DWG E020 FOR WIRE REQUIREMENTS.
14. HIRSCH DOOR ACCESS MODULE. SEE DWG E020 FOR DETAILS.
15. PROVIDE AND INSTALL INTRUSION SWITCH AS SHOWN.
16. TO SECURITY CONTROL PANEL LOCATION IN FEEDWATER ELECTRICAL ROOM. SEE DWG E011 FOR CONTINUATION.
17. 1"C – 2#14 FROM INTRUSION SWITCH TO CP-700A
18. COMPU-AIRE REMOTE COPNTROL PANEL. SEE DWG H005 FOR DETAILS

FILENAME: 6232-E706.dwg

LAST UPDATED: 01/18/2012 11:47 AM

LAST SAVED BY: yysee

No.	DATE	REVISIONS	APPROVED

DESIGNED: YPS
DRAWN: YPS
CHECKED: RVT

RBF CONSULTING

carollo

IRVINE RANCH WATER DISTRICT

RHONDA V. TIEJERINA REE NO. 15473 ELECTRICAL ENGINEER DATE
CINDY MILLER RCE NO. 58116 PROJECT MANAGER DATE
PATRICIA UEMATSU RCE NO. 36762 PRINCIPAL ENGINEER DATE

IRVINE RANCH WATER DISTRICT
BAKER WATER TREATMENT PLANT
PROJECT NO. 11218

CHEMICAL BUILDING
HVAC & SECURITY PLAN

DRAWING E706

SHEET 532 OF 632

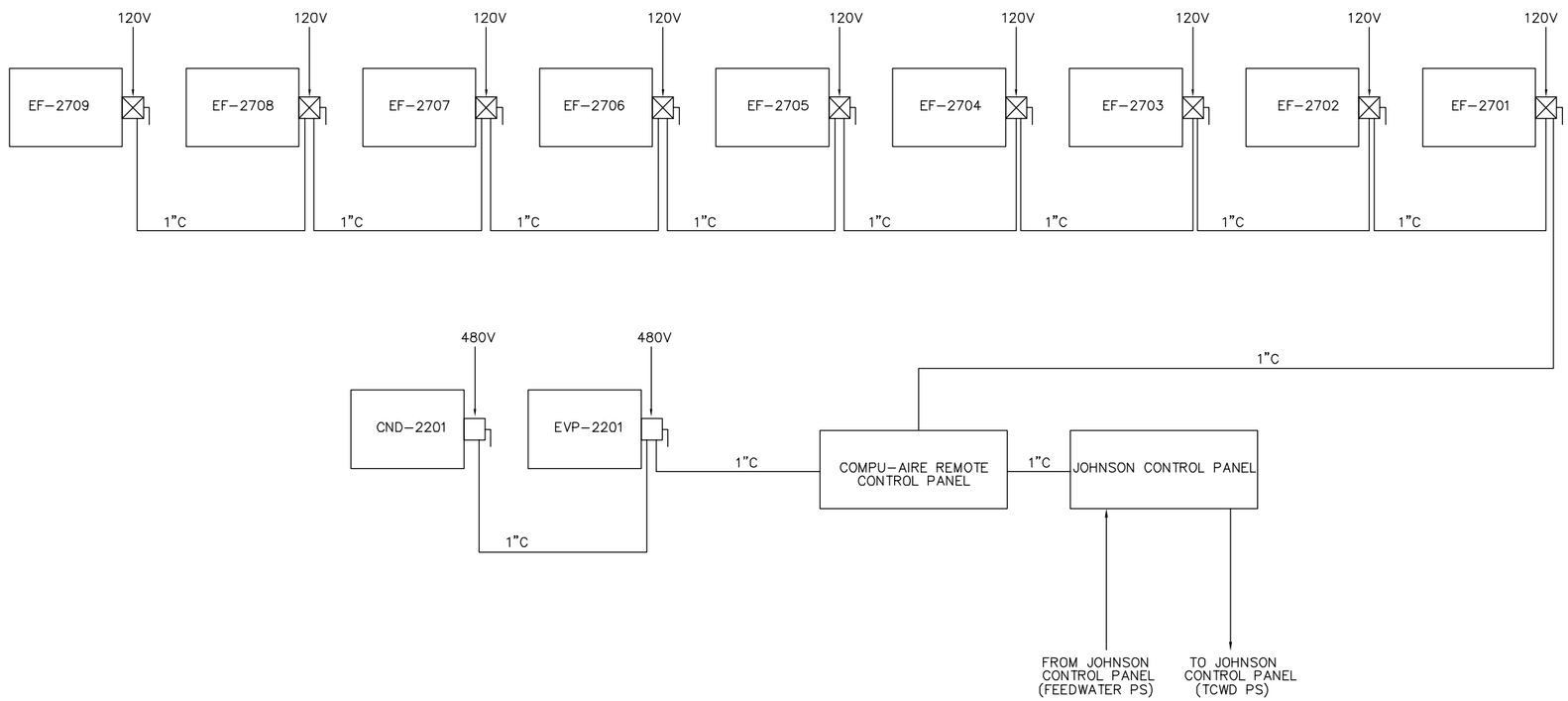

HVAC SYSTEM BLOCK DIAGRAM DIAGRAM

(REFER TO H006 & H007 FOR SCHEMATIC DIAGRAMS AND DETAILS)

LAST SAVED BY: ypsee LAST UPDATED: 01/16/2012 01:47 PM FILENAME: 6232-E707.dwg

No.	DATE	REVISIONS	APPROVED

DESIGNED: YPS
DRAWN: YPS
CHECKED: RVT

RBF CONSULTING

carollo

IRVINE RANCH WATER DISTRICT

RHONDA V. TIEJERINA REE NO. 15473 ELECTRICAL ENGINEER DATE
CINDY MILLER RCE NO. 58116 PROJECT MANAGER DATE
PATRICIA UEMATSU RCE NO. 36762 PRINCIPAL ENGINEER DATE

IRVINE RANCH WATER DISTRICT
BAKER WATER TREATMENT PLANT
PROJECT NO. 11218

CHEMICAL BUILDING
HVAC SYSTEM BLOCK DIAGRAM

DRAWING E707

CONDUIT SCHEDULE

PLAN SYMBOL #	CONDUIT QTY	CONDUIT SIZE	CONDUCTOR QTY.& SIZE	INSULATION RATING	LOCATION FROM	LOCATION TO	LOCATION DWG. NOS	REMARKS
7001P	1	1"	3#8, 1#8G	600V	PANEL -700	FLOW CONTROL FACILITY	E011,E101,E704 E712	PANEL-110
7002C	1	1"	14#14, 6#14 SPARE		CP-700A	PULL BOX	E011,E101,E704 E712	INTRUSION (3), PULSE (2) SUMP ALARM (2)
7003A	1	1"	4(2/C#16) SHLD		CP-700A	PULL BOX	E011,E101,E704 E712	FLOW (2), PIT (2)
7004P	1	1"	4#10, 1#10G		CP-700A	01-RW-FIT-0173,01-RW-FIT-0163	E011,E510,E704 E712	
7005P	1	1"	6#10, 1#10G		MCC-700	01-RW-MOV-0163,01-RW-MOV-0173	E011,E101,E704 E712	
7006C	1	1"	16#14, 4#14 SPARE		CP-700A	01-RW-MOV-0163,01-RW-MOV-0173	E011,E101,E704 E712	
7007A	1	1"	4(2/C#16) SHLD		CP-700A	01-RW-MOV-0163,01-RW-MOV-0173	E011,E510,E704 E712,E101	
7008P	1	1"	2#10, 1#10G		PANEL-700	UPS-700A	E704, E712	
7009P	1	1"	2#10, 1#10G		MCC-700	UPS-700B	E704,E712,E720	
7010P	1	1"	2#10, 1#10G		UPS-700A	CP-700A	E704, E712	
7011P	1	1"	3#10, 1#10G		UPS-700B	CP-700B	E704, E720	
7012P	1	1"	2#10, 1#10G		PANEL-700	MOTORIZED GATE	E011, E712	
7013C	1	1"	6#14, 2#14 SPARE		CP-700A	MOTORIZED GATE	E011, E712	
7014A	1	2"	DATA LINK		CP-700A	FIBER OPTIC PATCH PANEL	E712	
7015P	1	1"	2#10, 1#10G		CP-700	FIBER OPTIC PATCH PANEL	E712	
7016C	1	1"	2#14, 2#14 SPARE		MCC-700 (POWER MONITOR)	CP-700A	E712	
7017A	1	2"	DATA LINK		MCC-700 (POWER MONITOR)	CP-700A	E712	
7018C	1	1"	4#14, 6#14 SPARE		UPS-700A	CP-700A	E712	
7019P	1	1"	2#10, 1#10G		PL-700	CP-700A	E712	
7020A	1	1"	(2/C#16) SHLD		07-CDO-LIT-1110	07-CDO-LI-1110	E723	
7021A	1	1"	(2/C#16) SHLD		CP-700A	07-CDO-LI-1110	E723	VIA 7401A
7022C	1	1"	2#14, 2#14 SPARE		CP-700A	HIRSCH CONTROL PANEL	E706	
7025A	1	1"	(2/C#16) SHLD		07-CDO-LIT-1120	07-CDO-LI-1120	E723	
7026A	1	1"	(2/C#16) SHLD		CP-700A	07-CDO-LI-1120	E723	VIA 7401A
7030C	1	1"	CONDUIT ONLY		CP-700A	CP-700B	E704,E720,E712	
7031A	1	2"	DATA LINK		CP-700A	CP-700B	E704,E720,E712	
7032C	1	1"	8#14, 2#14 SPARE		AIT-1122, CP-700B	CP-700A	E704,E720,E712	
7033C	1	1"	2(2/C#16) SHLD		AIT-1122	CP-700A	E704,E720,E712	
7035P	1	1"	2#10, 1#10G		CP-700A	07-SH-LCP-1210	E704,E740,E712	
7036C	1	1"	20#14, 4#14 SPARE		CP-700A	JUNCTION BOX 1	E704,E740,E712	
7037C	1	1"	10#14, 4#14 SPARE		JUNCTION BOX 1	07-SH-LCP-1210	E740	
7038C	1	1"	4#14		JUNCTION BOX 1	07-SH-ZSOC-1210	E740	
7039C	1	1"	4#14		JUNCTION BOX 1	07-SH-LSHH-1200	E740	LSHH & DC POWER
7040A	1	1"	(2/C#16) SHLD		07-SH-LIT-1180	07-SH-LI-1180	E740	
7041A	1	1"	(2/C#16) SHLD		07-SH-LIT-1190	07-SH-LI-1190	E740	
7042A	1	1"	MSC		07-SH-LIT-1200	07-SH-LE1-1200	E740	
7043A	1	1"	MSC		07-SH-FIT-1245	07-SH-FE-1245	E740	
7044C	1	1"	4#14		JUNCTION BOX 2	07-SH-FSL-1230, -PSH-1230	E740	
7045C	1	1"	4#14		JUNCTION BOX 2	07-SH-FSL-1240, -PSH-1240	E740	
7046C	1	1"	8#14		07-SH-VCP-1230	JUNCTION BOX 2	E740	FSL-1230,PSH-1230 FSL-1240,PSH-1240
7047P	1	1"	3#10, 1#10G		07-SH-VCP-1230	07-SH-P-1230	E740	
7048P	1	1"	3#10, 1#10G		07-SH-VCP-1230	07-SH-P-1240	E740	
7049P	1	1"	3#10, 1#10G		MCC-700	07-SH-VCP-1230	E704,E740,E712	

CONDUIT NUMBERING SCHEME

AREA NUMBER — 7 001 P — CONDUIT ABBREVIATION; CONDUIT NUMBER

CONDUIT ABBREVIATIONS

P	= POWER
C	= CONTROL
A	= SIGNAL
F	= FIBER OPTIC

CONDUIT SCHEDULE

PLAN SYMBOL #	CONDUIT QTY	CONDUIT SIZE	CONDUCTOR QTY.& SIZE	INSULATION RATING	LOCATION FROM	LOCATION TO	LOCATION DWG. NOS	REMARKS
7050C	1	1"	24#14, 4#14 SPARE	600V	CP-700A	07-SH-VCP-1230	E704,E712,E740	
7051A	1	2"	4(2/C#16) SHLD		CP-700A	07-SH-VCP-1230	E704,E712,E740	
7052P	1	1"	6#10, 1#10G		CP-700A	07-SH-FIT-1245 07-SH-FSL-1240,07-SH-FSL-1230	E704,E712,E740	
7053A	1	1"	2(2/C#16) SHLD		CP-700A	07-SH-FIT-1245,07-SH-LIT-1200	E740	
7054C	1	1"	2#14		07-SH-VCP-1230	07-SH-MSH-1230	E740	
7055C	1	1"	2#14		07-SH-VCP-1230	07-SH-MSH-1240	E704, E740	
7056C	1	1"	2#14		07-SH-PSH-1210	CP-700A	E740	VIA 7036C
7057P	1	1"	2#10, 1#10G		07-SH-FSL-1240	CP-700A	E740	VIA 7052P
7058P	1	1"	2#10, 1#10G		07-SH-FSL-1230	CP-700A	E740	VIA 7052P
7059A	1	1"	2(2/C#16) SHLD		07-SH-LI-1180, LI-1190	CP-700A	E704, E740	VIA 7400P
7060A	1	2"	DATA LINK		07-SH-VCP-1230	CP-700A	E704,E740,E712	
7070P	1	1"	2#10, 1#10G		CP-700A	07-SB-LCP-1460	E704,E712,E775	
7071C	1	1"	20#14, 2#14 SPARE		CP-700A	JUNCTION BOX 4	E704,E712,E775	
7072C	1	1"	10#14, 2#14 SPARE		JUNCTION BOX 4	07-SB-LCP-1460	E775	
7073C	1	1"	4#14		JUNCTION BOX 4	07-SB-ZSOC-1450	E775	
7074C	1	1"	6#14		JUNCTION BOX 4	07-SB-LSHH-1450, -PSH-1460	E775	LSHH,PSH & DC PWR
7075A	1	1"	(2/C#16) SHLD		07-SB-LIT-1440	07-SB-LI-1440	E775	
7076A	1	1"	MSC		07-SB-LIT-1450	07-SB-LE1-1450	E775	
7077A	1	1"	(2/C#16) SHLD		CP-700A	07-SB-LIT-1450	E704,E712,E775	
7078A	1	1"	(2/C#16) SHLD		07-SB-LI-1440	CP-700A	E775	VIA 7402P
7085P	1	1"	2#10, 1#10G		CP-700A	07-CS-LCP-1280	E704,E712,E760	
7086C	1	1"	20#14, 4#14 SPARE		CP-700A	JUNCTION BOX 5	E704,E712,E760	
7087C	1	1"	10#14, 4#14 SPARE		JUNCTION BOX 5	07-CS-LCP-1280	E760	
7088C	1	1"	4#14		JUNCTION BOX 5	07-CS-ZSOC-1270	E760	
7089C	1	1"	4#14		JUNCTION BOX 5	07-CS-LSHH-1270	E760	LSHH, DC POWER
7090A	1	1"	(2/C#16) SHLD		07-CS-LIT-1250	07-CS-LI-1250	E760	
7091A	1	1"	(2/C#16) SHLD		07-CS-LIT-1260	07-CS-LI-1260	E760	
7092A	1	1"	MSC		07-CS-LIT-1270	07-CS-LE1-1270	E760	
7093A	1	1"	MSC		07-CS-FIT-1335	07-CS-FE-1335	E760	
7094C	1	1"	4#14		JUNCTION BOX 6	07-CS-FSL-1320, -PSH-1320	E760	
7095C	1	1"	4#14		JUNCTION BOX 6	07-CS-FSL-1330, -PSH-1330	E760	
7096C	1	1"	8#14		07-CS-VCP-1320	JUNCTION BOX 6	E760	FSL-1320,-1330 PSH-1320,-1330
7097P	1	1"	3#10, 1#10G		07-CS-VCP-1320	07-CS-P-1320	E760	
7098P	1	1"	3#10, 1#10G		07-CS-VCP-1320	07-CS-P-1330	E760	
7099P	1	1"	3#10, 1#10G		MCC-700	07-CS-VCP-1320	E704,E712,E760	
7100C	1	1"	24#14, 4#14 SPARE		CP-700A	07-CS-VCP-1320	E704,E712,E760	
7101A	1	2"	4(2/C#16) SHLD		CP-700A	07-CS-VCP-1320	E704,E712,E760	
7102P	1	1"	6#10, 1#10G		CP-700A	07-CS-FIT-1335 07-CS-FSL-1320,07-CS-FSL-1330	E704,E712,E760	
7103A	1	1"	2(2/C#16) SHLD		CP-700A	07-CS-FIT-1335,07-CS-LIT-1270	E704,E712,E760	
7104C	1	1"	2#14		JUNCTION BOX 6	07-CS-FIT-1335	E760	
7105C	1	1"	2#14		07-CS-VCP-1320	07-CS-MSH-1320	E760	
7106C	1	1"	2#14		07-CS-VCP-1320	07-CS-MSH-1330	E760	
7107C	1	1"	2#14		JUNCTION BOX 5	07-CS-PSH-1280	E760	
7108P	1	1"	2#10, 1#10G		07-CS-FSL-1320	CP-700A	E704, E760	VIA 7102P
7109P	1	1"	2#10, 1#10G		07-CS-FSL-1330	CP-700A	E704, E760	VIA 7102P
7110A	1	1"	2(2/C#16) SHLD		07-CS-LI-1250, -LI-1260	CP-700A	E704, E760	VIA 7402P
7111A	1	2"	DATA LINK		07-CS-VCP-1320	CP-700A	E760,E704,E712	

FILENAME: 6232-E708.dwg LAST UPDATED: 01/13/2012 11:42 AM LAST SAVED BY: ypsee

No.	DATE	REVISIONS	APPROVED

DESIGNED: YPS
DRAWN: YPS
CHECKED: RVT

RBF CONSULTING — carollo — IRVINE RANCH WATER DISTRICT

RHONDA V. TIEJERINA REE NO. 15473 ELECTRICAL ENGINEER DATE
CINDY MILLER RCE NO. 58116 PROJECT MANAGER DATE
PATRICIA UEMATSU RCE NO. 36762 PRINCIPAL ENGINEER DATE

IRVINE RANCH WATER DISTRICT
BAKER WATER TREATMENT PLANT
PROJECT NO. 11218

CHEMICAL BUILDING CONDUIT & CABLE SCHEDULES I

DRAWING E708

CONDUIT SCHEDULE

PLAN SYMBOL #	CONDUIT QTY	CONDUIT SIZE	CONDUCTOR QTY.& SIZE	INSULATION RATING	LOCATION FROM	LOCATION TO	LOCATION DWG. NOS	REMARKS
7115P	1	1"	3#10, 1#10G	600V	07-AA-VCP-1360	07-AA-P-1360	E750	
7116P	1	1"	3#10, 1#10G		07-AA-VCP-1360	07-AA-P-1370	E750	
7117P	1	1"	3#10, 1#10G		MCC-700	07-AA-VCP-1360	E704,E712,E750	
7118C	1	1"	24#14, 4#14 SPARE		CP-700A	07-AA-VCP-1360	E704,E712,E750	
7119A	1	2"	4(2/C#16) SHLD		CP-700A	07-AA-VCP-1360	E704,E712,E750	
7120P	1	1"	6#10, 1#10G		CP-700A	JUNCTION BOX 10	E704,E712,E750	
7121A	1	1"	3(2/C#16) SHLD		CP-700A	JUNCTION BOX 8	E704,E712,E750	
7122A	1	1"	(2/C#16) SHLD		07-AA-LIT-1340	07-AA-LI-1340	E750	
7123A	1	1"	(2/C#16) SHLD		07-AA-LIT-1350	07-AA-LI-1350	E750	
7124A	1	1"	MSC		07-AA-FIT-1375	07-AA-FE-1375	E750	
7125C	1	1"	4#14		JUNCTION BOX 7	07-AA-FSL-1360, -PSH-1360	E750	
7126C	1	1"	4#14		JUNCTION BOX 7	07-AA-FSL-1370, -PSH-1370	E750	
7127C	1	1"	4#14		JUNCTION BOX	ALARM/HORN	E750	
7128C	1	1"	2#14		07-AA-VCP-1360	07-AA-MSH-1360	E750	
7129C	1	1"	2#14		07-AA-VCP-1360	07-AA-MSH-1370	E750	
7130A	1	1"	(2/C#16) SHLD		JUNCTION BOX 8	07-AA-LIT-1345	E750	
7131A	1	1"	(2/C#16) SHLD		JUNCTION BOX 8	07-AA-FIT-1375	E750	
7132C	1	1"	2#14		JUNCTION BOX 11	07-AA-AIT-1355	E750	
7133A	1	1"	(2/C#16) SHLD		JUNCTION BOX 8	07-AA-AIT-1355	E750	
7134C	1	1"	4#14		CP-700A	JUNCTION BOX 11	E704,E712,E750	AIT-1355,SOV-1345
7135P	1	1"	3#10, 1#10G		07-PC-VCP-1150	07-PC-P-1150	E730	
7136P	1	1"	3#10, 1#10G		07-PC-VCP-1150	07-PC-P-1160	E730	
7137P	1	1"	3#10, 1#10G		07-PC-VCP-1150	07-PC-P-1170	E730	
7138P	1	1"	3#10, 1#10G		MCC-700	07-PC-VCP-1150	E704, E730	
7139C	1	2"	36#14, 9#14 SPARE		CP-700A	07-PC-VCP-1150	E704, E730	
7140A	1	2"	6(2/C#16) SHLD		CP-700A	07-PC-VCP-1150	E704, E730	
7141P	1	1"	10#10, 1#10G		CP-700A	07-PC-FIT-1175,07-PC-FIT-1176 07-PC-FSL-1150,-1160,-1170	E704,E712,E730	
7142A	1	2"	2(2/C#16) SHLD		CP-700A	07-PC-FIT-1175,07-PC-FIT-1176	E704,E712,E730	
7143A	1	1"	(2/C#16) SHLD		07-PC-LIT-1130	07-PC-LI-1130	E730	
7144A	1	1"	(2/C#16) SHLD		07-PC-LIT-1140	07-PC-LI-1140	E730	
7145A	1	1"	MSC		07-PC-FIT-1175,07-PC-FIT-1176	07-PC-FE-1175, 07-PC-FE-1176	E730	
7146C	1	1"	2#14		07-AA-LSH-1350	JUNCTION BOX	E750	
7147C	1	1"	4#14		JUNCTION BOX 9	07-PC-FSL-1150, -PSH-1150	E730	
7148C	1	1"	4#14		JUNCTION BOX 9	07-PC-FSL-1160, -PSH-1160	E730	
7149C	1	1"	4#14		JUNCTION BOX 9	07-PC-FSL-1170, -PSH-1170	E730	
7150C	1	1"	6#14		CP-700A	JUNCTION BOX 9	E704,E712,E730	
7151C	1	1"	2#14		07-PC-VCP-1150	07-PC-MSH-1150	E730	
7152C	1	1"	2#14		07-PC-VCP-1150	07-PC-MSH-1160	E730	
7153C	1	1"	2#14		07-PC-VCP-1150	07-PC-MSH-1170	E730	
7154P	1	1"	2#10, 1#10G		JUNCTION BOX 10	07-AA-FIT-1375	E750	
7155C	1	1"	2#14		07-AA-LSH-1340	JUNCTION BOX	E750	
7156C	1	1"	2#14		JUNCTION BOX 11	07-AA-SOV-1345	E750	
7157P	1	1"	2#10, 1#10G		07-PC-FSL-1150	CP-700A	E730	VIA 7141P
7158P	1	1"	2#10, 1#10G		07-PC-FSL-1160	CP-700A	E730	VIA 7141P
7159P	1	1"	2#10, 1#10G		07-PC-FSL-1170	CP-700A	E730	VIA 7141P
7160C	1	1"	2#14		07-AA-LSH-1340	07-AA- FILL STATION	E750	
7161C	1	1"	2#14		07-AA-LSH-1350	07-AA- FILL STATION	E750	
7162A	1	1"	2(2/C#16) SHLD		07-AA-LI-1340, LI-1350	CP-700A	E730,E750	VIA 7403A
7163P	1	1"	2#10, 1#10G		07-AA-FSL-1360	CP-700A	E750	VIA 7120P

CONDUIT NUMBERING SCHEME	CONDUIT ABBREVIATIONS
AREA NUMBER — 7 001 P — CONDUIT ABBREVIATION; CONDUIT NUMBER	P = POWER C = CONTROL A = SIGNAL F = FIBER OPTIC

CONDUIT SCHEDULE

PLAN SYMBOL #	CONDUIT QTY	CONDUIT SIZE	CONDUCTOR QTY.& SIZE	INSULATION RATING	LOCATION FROM	LOCATION TO	LOCATION DWG. NOS	REMARKS
7164P	1	1"	2#10, 1#10G	600V	07-AA-FSL-1370	CP-700A	E750	VIA 7120P
7165C	1	1"	8#14		JUNCTION BOX 7	07-AA-VCP-1360	E750	
7166A	1	2"	DATA LINK		07-PC-VCP-1150	CP-700A	E730	
7167A	1	1"	MSC		07-AA-LIT-1345	07-AA-LE-1345	E750	
7181P	1	2"	CONDUIT ONLY		FLOW CONTROL FACILITY PB1	CHEMICAL BLDG ELEC ROOM	E101,E011,E712 E704	SPARE
7182A	1	2"	CONDUIT ONLY		FLOW CONTROL FACILITY PB3	CHEMICAL BLDG ELEC ROOM	E101,E011,E712 E704	SPARE
7183C	1	2"	CONDUIT ONLY		FLOW CONTROL FACILITY PB2	CHEMICAL BLDG ELEC ROOM	E101,E011,E712 E704	SPARE
7200P	1	1"	2#10, 1#10G		CP-700B	07-CDO-P-1123	E720	
7201C	1	1"	2#14		CP-700B	07-CDO-SOV-1123	E720	
7202C	1	1"	2#14		CP-700B	07-CDO-LSHH-1125	E720	
7203A	1	1"	(2/C#16) SHLD		CP-700B	07-CDO-LIT-1110	E720	
7204A	1	2"	CONDUIT ONLY		CHLORINE DIOXIDE SKID	CP-700B	E720	
7205A	1	2"	CONDUIT ONLY		CHLORINE DIOXIDE SKID	CP-700B	E720	
7206P	1	1"	2#10, 1#10G		CHLORINE DIOXIDE SKID	CP-700B	E720	
7207P	1	1"	2#10, 1#10G		CHLORINE DIOXIDE SKID	CP-700B	E720	
7260P	1	1"	2#10, 1#10G		CP-700A	07-CA-LCP-1400	E704,E712,E770	
7261C	1	1"	20#14, 4#14 SPARE		CP-700A	JUNCTION BOX 3	E704,E712,E770	
7262C	1	1"	10#14, 4#14 SPARE		JUNCTION BOX 3	07-CA-LCP-1400	E770	
7263C	1	1"	4#14		JUNCTION BOX 3	07-CA-ZSOC-1390	E770	
7264C	1	1"	6#14		JUNCTION BOX 3	07-CA-LSHH-1390, -PSH-1400	E770	LSHH, PSH, DC PWR
7265A	1	1"	(2/C#16) SHLD		07-CA-LIT-1380	07-CA-LI-1380	E770	
7266A	1	1"	MSC		07-CA-LIT-1390	07-CA-LE1-1390	E770	
7267A	1	1"	(2/C#16) SHLD		CP-700A	07-CA-LIT-1390	E770,E704,E712	
7268A	1	1"	(2/C#16) SHLD		CP-700A	07-CA-LI-1380	E770	VIA 7400A
7300P	1	2"	3#4, 1#4G		MCC-700	07-PA-VCP-1500	E704,E711,E712	
7301P	1	1"	3#10, 1#10G		07-PA-VCP-1500	07-PA-CMP-1510	E711	
7302P	1	1"	3#10, 1#10G		07-PA-VCP-1500	07-PA-CMP-1520	E711	
7303P	1	1"	2#10, 1#10G		07-PA-VCP-1500	07-PA-DRY-1540	E711	
7304C	1	1"	10#14		07-PA-VCP-1500	07-PA-PSL-1510,-1520,-1530 07-PA-TSH-1510,-1520,PSH-1530	E711	
7305C	1	1"	10#14, 4#14 SPARE		07-PA-VCP-1500	CP-700A	E704,E711,E712	
7350P	1	1"	8#10, 1#10G		PL-700	LP-700	E712	
7351P	1	1"	2#10, 1#10G		PL-700	JOHNSON CONTROL PANEL	E712	
7352P	1	1"	2#10, 1#10G		PL-700	SECURITY CONTROL PANEL	E712	
7353P	1	1"	3#10, 1#10G		MCC-700	07-HVAC-EVP-2701	E706	
7354P	1	1"	3#10, 1#10G		MCC-700	07-HVAC-CND-2701	E706	
7400A	1	1"	3(2/C#16) SHLD		CP-700A	JUNCTION BOX	E704,E770,E740 E723,E712	
7401A	1	1"	2(2/C#16) SHLD		CP-700A	JUNCTION BOX	E704,E711,E712	
7402A	1	1"	3(2/C#16) SHLD		CP-700A	JUNCTION BOX	E704,E775,E760 E750,E730,E712	
7203A	1	1"	4(2/C#16) SHLD		CP-700A	JUNCTION BOX	E704,E750,E730 E712	

FILENAME: 6232-E709.dwg LAST UPDATED: 01/13/2012 11:42 AM LAST SAVED BY: ypsee

No.	DATE	REVISIONS	APPROVED

DESIGNED: YPS
DRAWN: YPS
CHECKED: RVT

RBF CONSULTING — carollo — IRVINE RANCH WATER DISTRICT

RHONDA V. TIEJERINA REE NO. 15473 ELECTRICAL ENGINEER DATE
CINDY MILLER RCE NO. 58116 PROJECT MANAGER DATE
PATRICIA UEMATSU RCE NO. 36762 PRINCIPAL ENGINEER DATE

IRVINE RANCH WATER DISTRICT
BAKER WATER TREATMENT PLANT
PROJECT NO. 11218

CHEMICAL BUILDING CONDUIT & CABLE SCHEDULES II

DRAWING E709

VOLTS 120/208V
PHASE 3
WIRE 4

PANEL PL-700
LOCATION IN MCC-700

MAIN BREAKER 200A
BUS RATING 200
MOUNTING: IN MCC

DESCRIPTION	LTS.	REC.	MISC.	VOLT-AMPS ØA	VOLT-AMPS ØB	VOLT-AMPS ØC	BRKR. AMP	BRKR. P	CIR.	BUS A B C	CIR.	BRKR. P	BRKR. AMP	VOLT-AMPS ØA	VOLT-AMPS ØB	VOLT-AMPS ØC	LTS.	REC.	MISC.	DESCRIPTION
ELEC ROOM LIGHTING	X			496			20	1	1		2	1	20	1260				X		ELEC & MECH ROOM RECEPTACLE
MECH ROOM LIGHTING	X				496		20	1	3		4	1	20		900			X		SUMP PUMP RECEPTACLE
CHEMICAL ROOM LIGHTING	X					1280	20	2/	5		6	1	20			720		X		SUMP PUMP RECEPTACLE
	X			1280			20	/P	7		8	1	20	1000				X		MOTORIZED GATE
CHEMICAL ROOM LIGHTING	X				1120		20	2/	9		10	1	20		2000			X		UPS-700A
	X					1120	20	/P	11		12	1	40			500			X	CP-700
CHEMICAL ROOM LIGHTING	X			320			20	2/	13		14	1	40	XX					X	SPARE
	X				320		20	/P	15		16	1	20							SPACE
EMERGENCY LIGHTING	X					120	20	1	17		18	1	20							SPARE
CHEMICAL ROOM WALKPACK LIGHTING	X			1300			20	1	19		20	1	20							SPARE
EXIT LIGHT					140		20	1	21		22	2/	20		500					PERIMETER LGIHTS ZONE 2
EXTERIOR LIGHTS						500	20	1	23		24	/P	20			500				
PERIMETER LGIHTS ZONE 1				500			20	2/	25		26	3/	60	2000						PANEL-110
					500		20	/P	27		28		60		2000					
SPARE							20	1	29		30	/P	60			2000				

SUBTOTAL 3396 2076 2520 4260 4900 3220

LOAD ØA 7656 ØB 6976 ØC 5740

LCL X .25 ØA - ØB - ØC -

TOTAL ØA 7656 ØB 6976 ØC 5740

PANEL TOTAL 20372 VOLT-AMPS. = 55.16 AMPS

HIGH LEG 6656 VOLT-AMPS. = 55.47 AMPS

LAST SAVED BY: ypsee LAST UPDATED: 01/13/2012 09:42 AM FILENAME: 6232-E710.dwg

No.	DATE	REVISIONS	APPROVED

DESIGNED: YPS
DRAWN: YPS
CHECKED: RVT

RBF CONSULTING

carollo

IRVINE RANCH WATER DISTRICT

RHONDA V. TIEJERINA REE NO. 15473 ELECTRICAL ENGINEER DATE
CINDY MILLER RCE NO. 58116 PROJECT MANAGER DATE
PATRICIA UEMATSU RCE NO. 36762 PRINCIPAL ENGINEER DATE

IRVINE RANCH WATER DISTRICT
BAKER WATER TREATMENT PLANT
PROJECT NO. 11218

CHEMICAL BUILDING PANELBOARD SCHEDULE

DRAWING E710

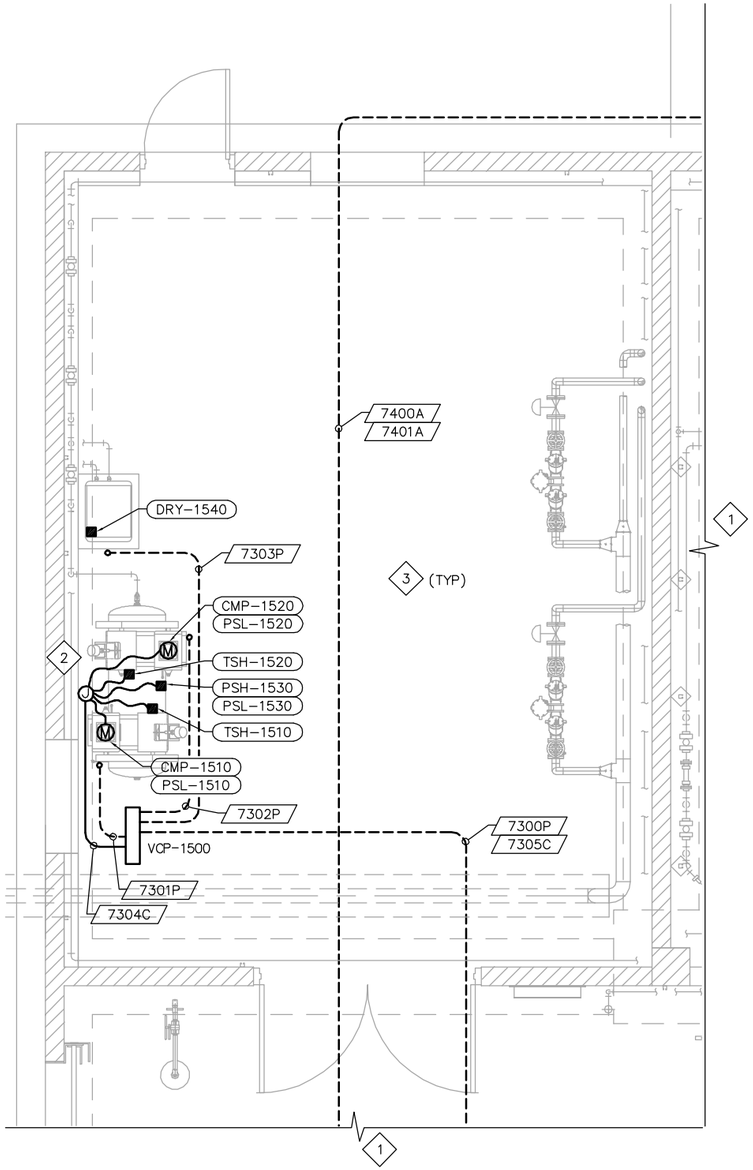

MECHANICAL ROOM PLAN

SCALE: 3/8" = 1'-0"

NOTES:

1. SEE E011 FOR CONTINUATION
2. CHEMICAL CLEANING TRANSFER PUMP AIR SYSTEM INSTRUMENTS LOCATION SHOWN DIAGRAMMATIC ONLY. REFER TO DWG I717. CONTRACTOR TO VERIFY LOCATION WITH THE SUPPLIER PRIOR TO INSTALLATION.
3. ALL UNDERGROUND CONDUIT SHALL BE ROUTED UNDER FLOOR SLAB. CONDUIT ROUTING SHOWN ARE DIAGRAMMATIC ONLY. CONTRACTOR TO SUBMIT CONDUIT LAYOUT FOR ENGINEER APPROVAL PRIOR TO INSTALLATION.

EQUIPMENT TAG NUMBERS ON THIS DRAWING ARE PRECEDED W/ 07-PA- UNLESS OTHERWISE LABELED

No.	DATE	REVISIONS	APPROVED

DESIGNED: YPS
DRAWN: YPS
CHECKED: RVT

RBF CONSULTING

carollo

IRVINE RANCH WATER DISTRICT

RHONDA V. TIEJERINA REE NO. 15473 ELECTRICAL ENGINEER DATE
CINDY MILLER RCE NO. 58116 PROJECT MANAGER DATE
PATRICIA UEMATSU RCE NO. 36762 PRINCIPAL ENGINEER DATE

IRVINE RANCH WATER DISTRICT
BAKER WATER TREATMENT PLANT
PROJECT NO. 11218

CHEMICAL BUILDING
MECHANICAL ROOM POWER PLAN

DRAWING E711
SHEET 537 OF 632

LAST SAVED BY: ypsee LAST UPDATED: 01/18/2012 11:47 AM FILENAME: 6232-E711.dwg

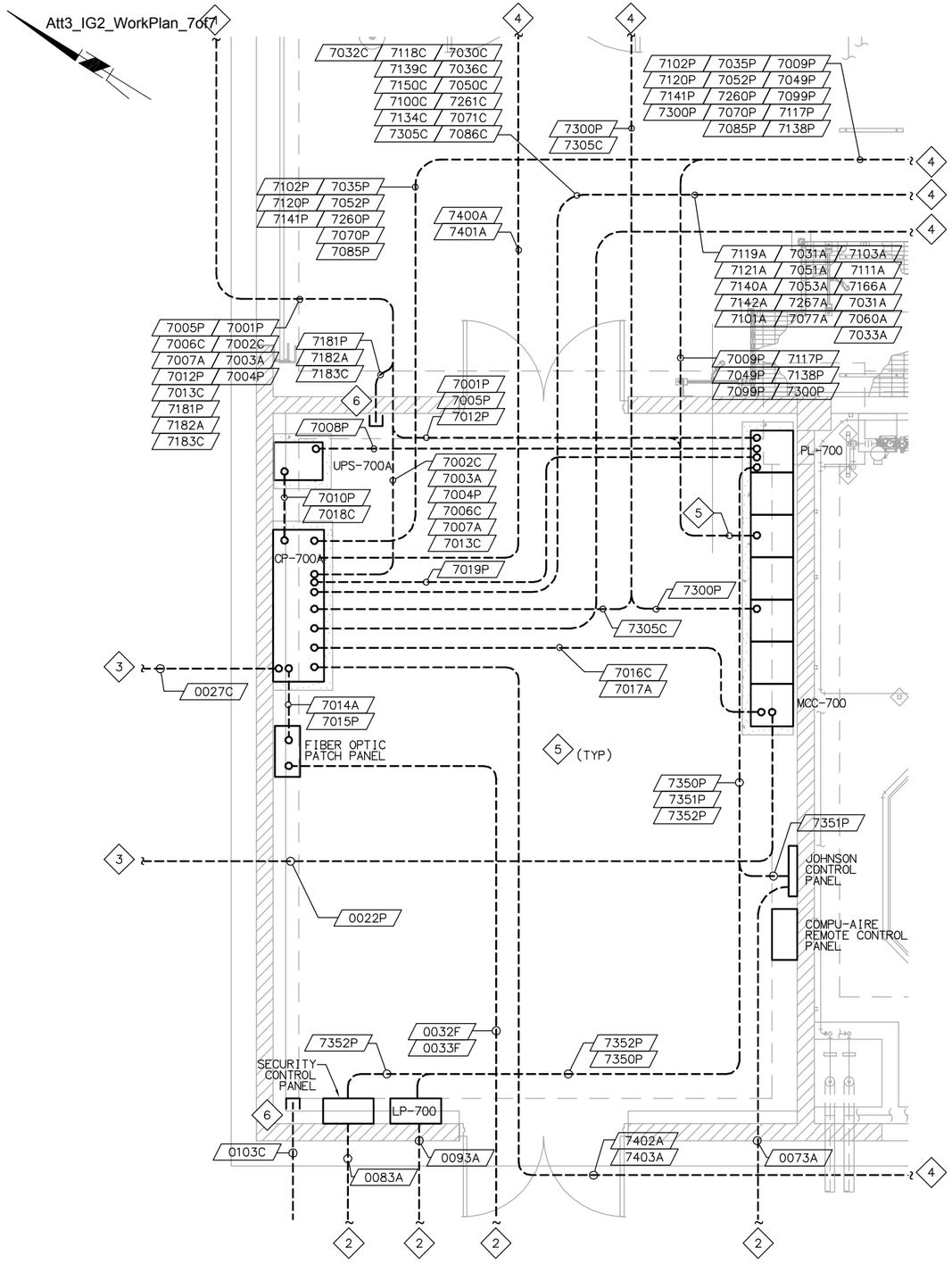

ELECTRICAL ROOM PLAN

SCALE: 3/8" = 1'-0"

NOTES:

1. SEE E011 FOR CONTINUATION
2. TO COMMUNICATION PULLBOX 1. SEE DWG E011 FOR CONTINUATION.
3. TO MSB-001. SEE DWG E013 FOR CONTINUATION.
4. SEE DWG E704 FOR CONTINUATION
5. 7009P / 7001P / 7099P / 7138P / 7005P / 7049P / 7012P / 7117P / 7300P
6. STUB UP CONDUIT MIN 6" AFF AND CAP OFF END.
7. ALL UNDERGROUND CONDUIT SHALL BE ROUTED UNDER FLOOR SLAB. CONDUIT ROUTING SHOWN ARE DIAGRAMMATIC ONLY. CONTRACTOR TO SUBMIT CONDUIT LAYOUT FOR ENGINEER APPROVAL PRIOR TO INSTALLATION.

LAST SAVED BY: ypsee LAST UPDATED: 01/18/2012 11:48 AM FILENAME: 6232-E712.dwg

No.	DATE	REVISIONS	APPROVED

DESIGNED: YPS
DRAWN: YPS
CHECKED: RVT

RBF CONSULTING

carollo

IRVINE RANCH WATER DISTRICT

RHONDA V. TIEJERINA REE NO. 15473 ELECTRICAL ENGINEER DATE
CINDY MILLER RCE NO. 58116 PROJECT MANAGER DATE
PATRICIA UEMATSU RCE NO. 36762 PRINCIPAL ENGINEER DATE

IRVINE RANCH WATER DISTRICT
BAKER WATER TREATMENT PLANT
PROJECT NO. 11218

CHEMICAL BUILDING
ELECTRICAL ROOM POWER PLAN

DRAWING E712

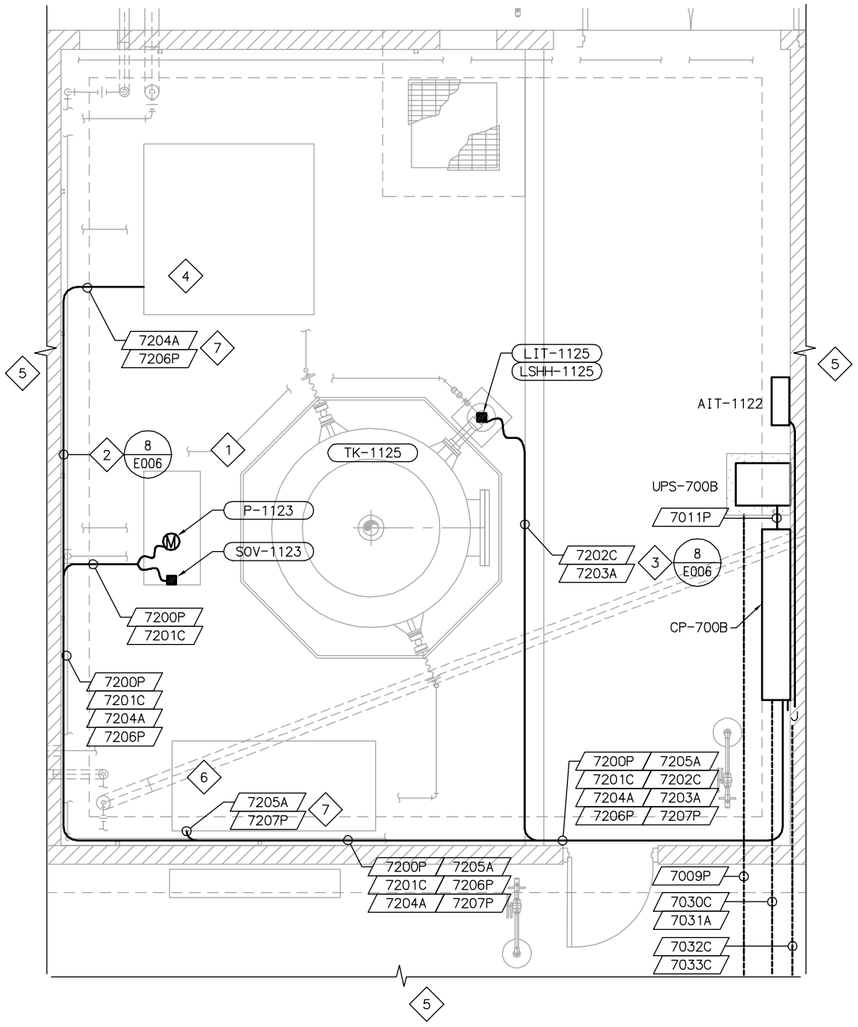

CHLORINE DIOXIDE ROOM PLAN

SCALE: 3/8" = 1'-0"

NOTES:

1. NO CONDUIT SHALL BE ROUTED UNDER THE CONTAINMENT AREA AND CONTAINMENT WALL PENETRATION IS PROHIBITED. ALL CONDUIT ROUTING SHALL BE ABOVE CONTAINMENT WALL HEIGHT WITH PROPER SUPPORT. CONDUIT SHALL BE INSTALLED BASED ON FIELD CONDITIONS. FIELD RELOCATE IF REQUIRED. CONTRACTOR TO SUBMIT CONDUIT SUPPORT LAYOUT FOR ENGINEER APPROVAL PRIOR TO INSTALLATION.
2. WALL MOUNTED CONDUIT. ABOVE CONTAINMENT WALL.
3. MOUNT CONDUIT AT THE OUTER SIDE OF THE CONTAINMENT WALL
4. CHLORINE DIOXIDE FEED SYSTEM SKID FURNISHED BY CHLORINE DIOXIDE SYSTEM SUPPLIER.
5. SEE DWG E704 FOR CONTINUATION.
6. CHLORINE DIOXIDE GENERATOR SYSTEM SKID FURNISHED BY CHLORINE DIOXIDE SYSTEM SUPPLIER.
7. CONTRACTOR SHALL PROVIDE AND INSTALL ALL CONDUIT & WIRING REQUIRED BETWEEN CP-700B AND CHLORINE DIOXIDE GENERATOR & FEED SYSTEM PER MANUFACTURER'S RECOMMENDATION. PROVIDE CONDUIT & WIRING LAYOUT FOR ENGINEER APPROVAL PRIOR TO INSTALLATION.

EQUIPMENT TAG NUMBERS ON THIS DRAWING ARE PRECEDED W/ 07-CDO- UNLESS OTHERWISE LABELED

No.	DATE	REVISIONS	APPROVED

DESIGNED: YPS
DRAWN: YPS
CHECKED: RVT

RBF CONSULTING

carollo

IRVINE RANCH WATER DISTRICT

RHONDA V. TIEJERINA REE NO. 15473 ELECTRICAL ENGINEER DATE
CINDY MILLER RCE NO. 58116 PROJECT MANAGER DATE
PATRICIA UEMATSU RCE NO. 36762 PRINCIPAL ENGINEER DATE

IRVINE RANCH WATER DISTRICT
BAKER WATER TREATMENT PLANT
PROJECT NO. 11218

CHEMICAL BUILDING
CHLORINE DIOXIDE
ENLARGED PLAN

DRAWING E720
SHEET 539 OF 632

LAST SAVED BY: ypsee LAST UPDATED: 01/18/2012 11:49 AM FILENAME: 6232-E720.dwg

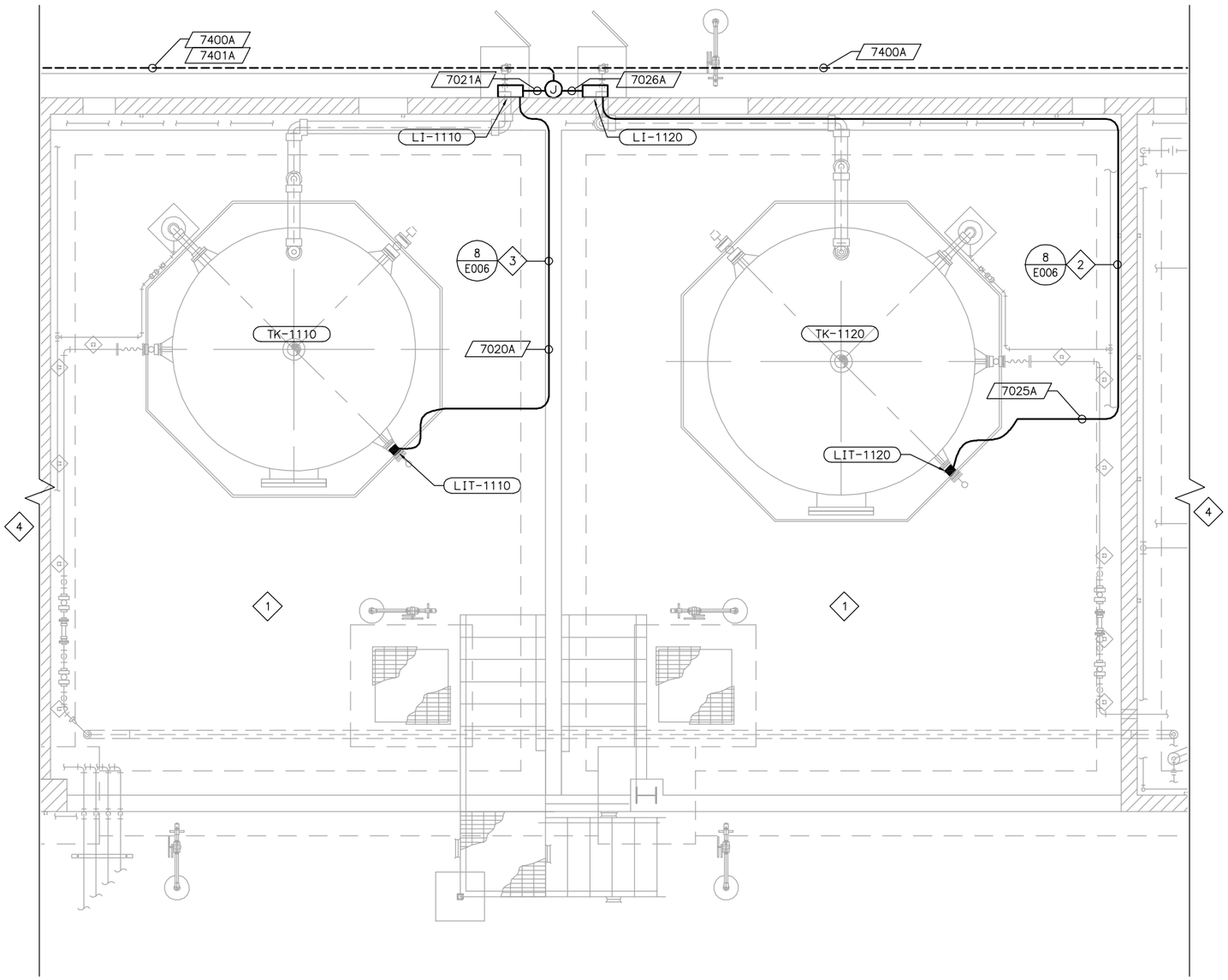

NOTES:

1. NO CONDUIT SHALL BE ROUTED UNDER THE CONTAINMENT AREA AND CONTAINMENT WALL PENETRATION IS PROHIBITED. ALL CONDUIT ROUTING SHALL BE ABOVE CONTAINMENT WALL HEIGHT WITH PROPER SUPPORT. CONDUIT SHALL BE INSTALLED BASED ON FIELD CONDITIONS. FIELD RELOCATE IF REQUIRED. CONTRACTOR TO SUBMIT CONDUIT SUPPORT LAYOUT FOR ENGINEER APPROVAL PRIOR TO INSTALLATION.
2. WALL MOUNTED CONDUIT. ABOVE CONTAINMENT WALL.
3. MOUNT CONDUIT AT THE TOP OF THE CONTAINMENT WALL
4. SEE DWG E704 FOR CONTINUATION.

SODIUM CHLORITE PLAN

SCALE: 3/8" = 1'-0"

EQUIPMENT TAG NUMBERS ON THIS DRAWING ARE PRECEDED W/ **07-CD0-** UNLESS OTHERWISE LABELED

No.	DATE	REVISIONS	APPROVED

DESIGNED: YPS
DRAWN: YPS
CHECKED: RVT

RBF CONSULTING

carollo

IRVINE RANCH WATER DISTRICT

RHONDA V. TIEJERINA	REE NO. 15473	ELECTRICAL ENGINEER	DATE
CINDY MILLER	RCE NO. 58116	PROJECT MANAGER	DATE
PATRICIA UEMATSU	RCE NO. 36762	PRINCIPAL ENGINEER	DATE

IRVINE RANCH WATER DISTRICT
BAKER WATER TREATMENT PLANT
PROJECT NO. 11218

CHEMICAL BUILDING
SODIUM CHLORITE & HYDROCHLORIC ACID ENLARGED PLAN

DRAWING **E723**

SHEET **540** OF **632**

LAST SAVED BY: ypsee LAST UPDATED: 01/19/2012 10:47 AM FILENAME: 6232-E723.dwg

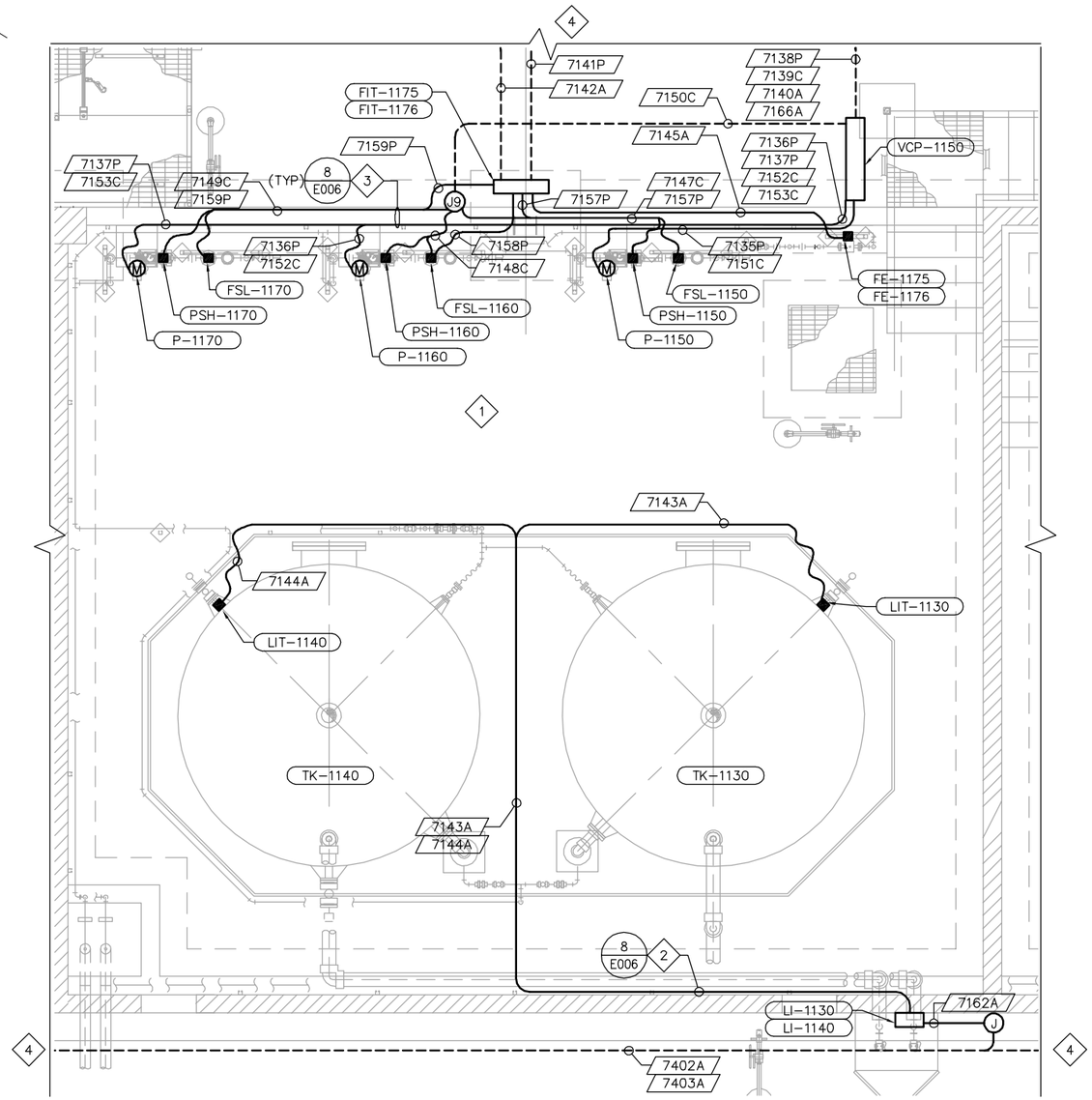

PRIMARY COAGULANT PLAN

SCALE: 3/8" = 1'-0"

NOTES:

1. NO CONDUIT SHALL BE ROUTED UNDER THE CONTAINMENT AREA AND CONTAINMENT WALL PENETRATION IS PROHIBITED. ALL CONDUIT ROUTING SHALL BE ABOVE CONTAINMENT WALL HEIGHT WITH PROPER SUPPORT. CONDUIT SHALL BE INSTALLED BASED ON FIELD CONDITIONS. FIELD RELOCATE IF REQUIRED. CONTRACTOR TO SUBMIT CONDUIT SUPPORT LAYOUT FOR ENGINEER APPROVAL PRIOR TO INSTALLATION.
2. WALL MOUNTED CONDUIT. ABOVE CONTAINMENT WALL.
3. MOUNT CONDUIT AT THE OUTER SIDE OF THE CONTAINMENT WALL
4. SEE DWG E704 FOR CONTINUATION.

EQUIPMENT TAG NUMBERS ON THIS DRAWING ARE PRECEDED W/ **07-PC-** UNLESS OTHERWISE LABELED

No.	DATE	REVISIONS	APPROVED

DESIGNED: YPS
DRAWN: YPS
CHECKED: RVT

RBF CONSULTING

carollo

IRVINE RANCH WATER DISTRICT

RHONDA V. TIEJERINA REE NO. 15473 ELECTRICAL ENGINEER DATE
CINDY MILLER RCE NO. 58116 PROJECT MANAGER DATE
PATRICIA UEMATSU RCE NO. 36762 PRINCIPAL ENGINEER DATE

IRVINE RANCH WATER DISTRICT
BAKER WATER TREATMENT PLANT
PROJECT NO. 11218

CHEMICAL BUILDING PRIMARY COAGULANT ENLARGED PLAN

DRAWING **E730**
SHEET **541** OF **632**

LAST SAVED BY: ypsee LAST UPDATED: 01/18/2012 11:50 AM FILENAME: 6232-E730.dwg

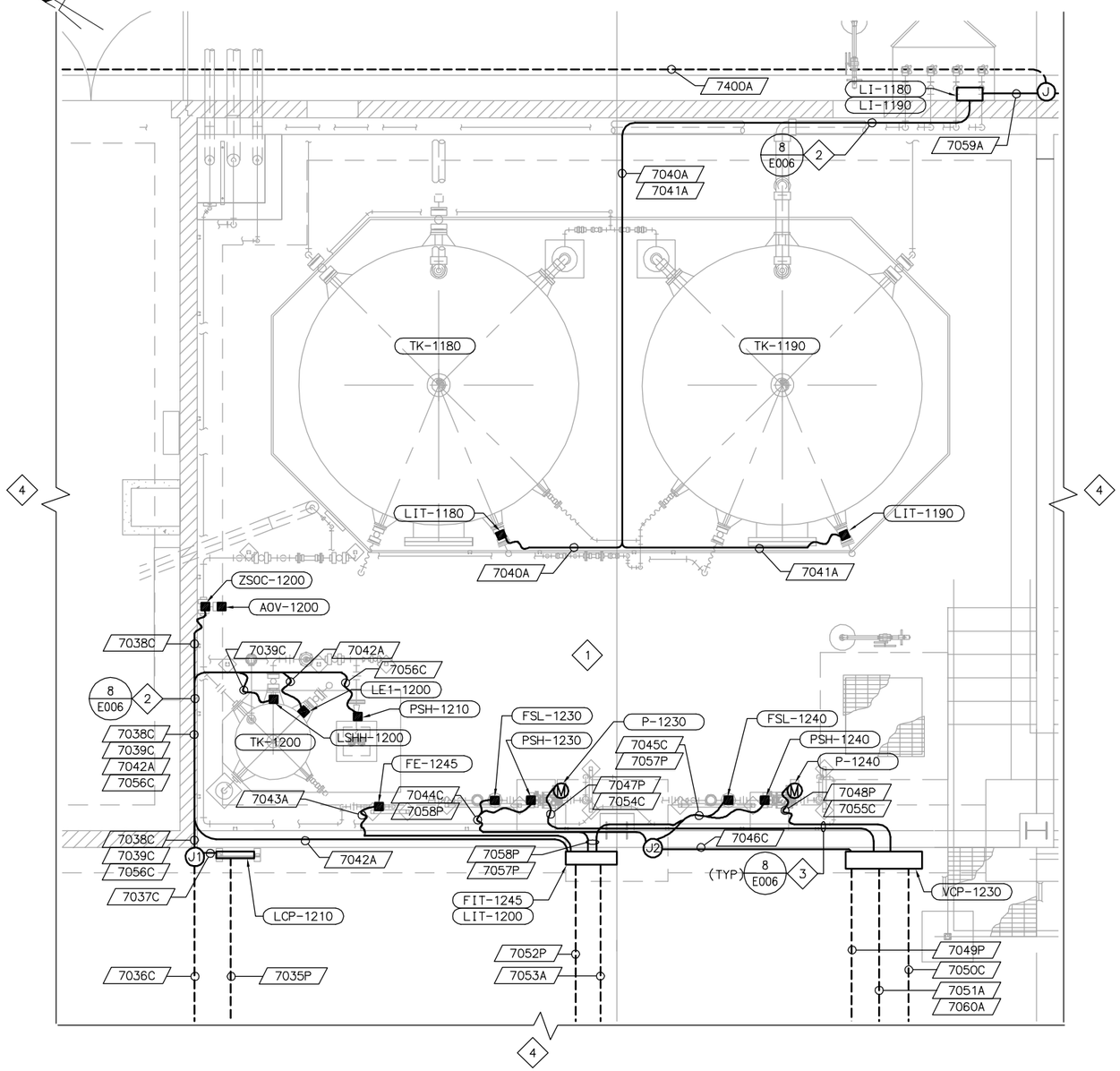

SODIUM HYPOCHLORITE PLAN

SCALE: 3/8" = 1'-0"

NOTES:

1. NO CONDUIT SHALL BE ROUTED UNDER THE CONTAINMENT AREA AND CONTAINMENT WALL PENETRATION IS PROHIBITED. ALL CONDUIT ROUTING SHALL BE ABOVE CONTAINMENT WALL HEIGHT WITH PROPER SUPPORT. CONDUIT SHALL BE INSTALLED BASED ON FIELD CONDITIONS. FIELD RELOCATE IF REQUIRED. CONTRACTOR TO SUBMIT CONDUIT SUPPORT LAYOUT FOR ENGINEER APPROVAL PRIOR TO INSTALLATION.
2. WALL MOUNTED CONDUIT. ABOVE CONTAINMENT WALL.
3. MOUNT CONDUIT AT THE OUTER SIDE OF THE CONTAINMENT WALL
4. SEE DWG E704 FOR CONTIUATION.

EQUIPMENT TAG NUMBERS ON THIS DRAWING ARE PRECEDED W/ **07-SH-** UNLESS OTHERWISE LABELED

No.	DATE	REVISIONS	APPROVED

DESIGNED: YPS
DRAWN: YPS
CHECKED: RVT

RBF CONSULTING

carollo

IRVINE RANCH WATER DISTRICT

RHONDA V. TIEJERINA REE NO. 15473 ELECTRICAL ENGINEER DATE
CINDY MILLER RCE NO. 58116 PROJECT MANAGER DATE
PATRICIA UEMATSU RCE NO. 36762 PRINCIPAL ENGINEER DATE

IRVINE RANCH WATER DISTRICT
BAKER WATER TREATMENT PLANT
PROJECT NO. 11218

CHEMICAL BUILDING SODIUM HYPOCHLORITE ENLARGED PLAN

DRAWING **E740**
SHEET **542** OF **632**

LAST SAVED BY: ypsee LAST UPDATED: 01/18/2012 11:51 AM FILENAME:6232-E740.dwg

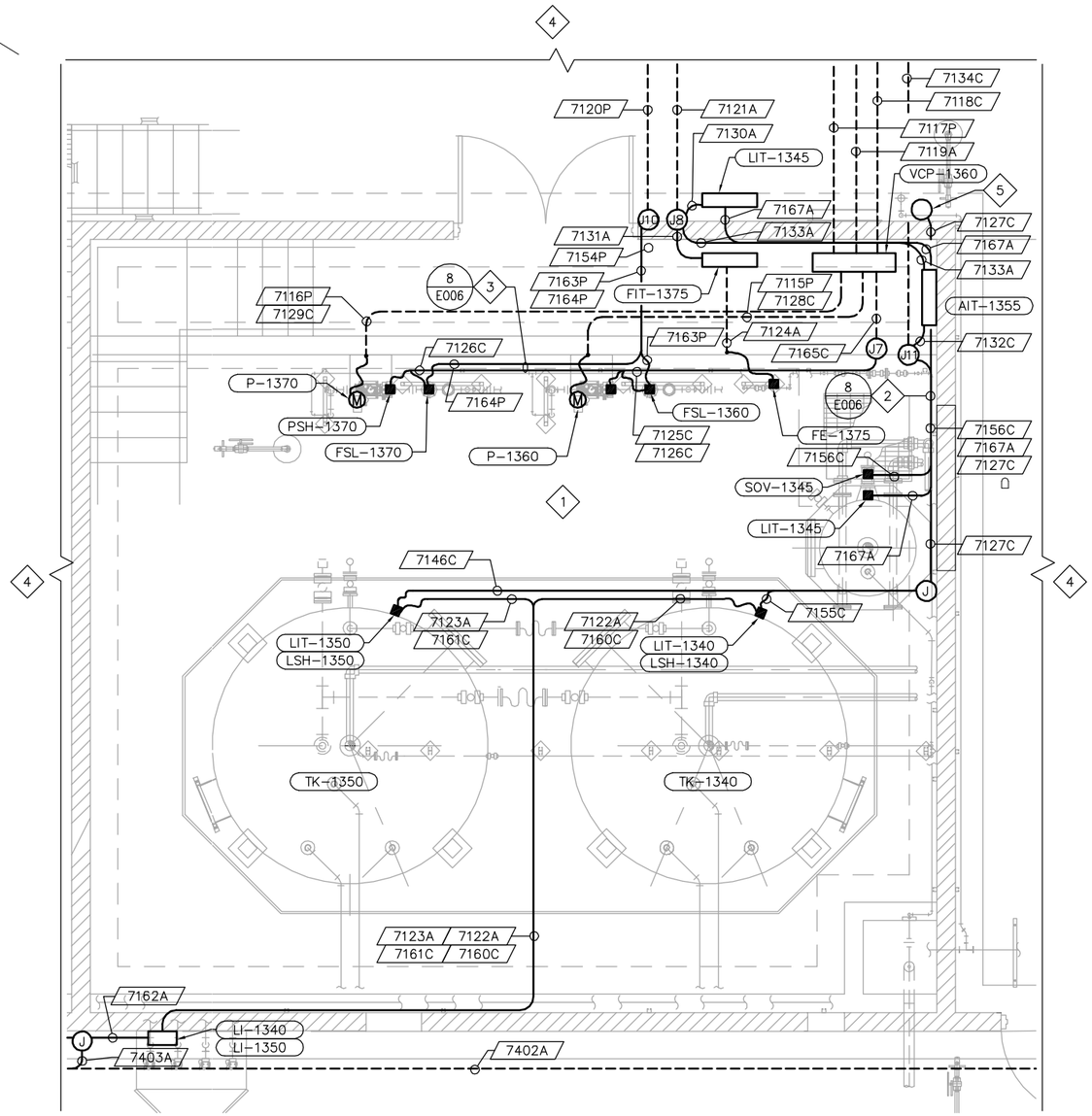

AQUEOUS AMMONIA PLAN

SCALE: 3/8" = 1'-0"

NOTES:

1. NO CONDUIT SHALL BE ROUTED UNDER THE CONTAINMENT AREA AND CONTAINMENT WALL PENETRATION IS PROHIBITED. ALL CONDUIT ROUTING SHALL BE ABOVE CONTAINMENT WALL HEIGHT WITH PROPER SUPPORT. CONDUIT SHALL BE INSTALLED BASED ON FIELD CONDITIONS. FIELD RELOCATE IF REQUIRED. CONTRACTOR TO SUBMIT CONDUIT SUPPORT LAYOUT FOR ENGINEER APPROVAL PRIOR TO INSTALLATION.
2. WALL MOUNTED CONDUIT. ABOVE CONTAINMENT WALL.
3. MOUNT CONDUIT AT THE OUTER SIDE OF THE CONTAINMENT WALL
4. SEE DWG E704 FOR CONTINUATION.
5. ALARM/HORN. SEE P&ID FOR DETAILS. CONTRACTOR TO VERIFY LOCATION PRIOR TO INSTALLATION.

EQUIPMENT TAG NUMBERS ON THIS DRAWING ARE PRECEDED W/ **07-AA-** UNLESS OTHERWISE LABELED

No.	DATE	REVISIONS	APPROVED

DESIGNED: YPS
DRAWN: YPS
CHECKED: RVT

RBF CONSULTING

carollo

IRVINE RANCH WATER DISTRICT

RHONDA V. TIEJERINA REE NO. 15473 ELECTRICAL ENGINEER DATE
CINDY MILLER RCE NO. 58116 PROJECT MANAGER DATE
PATRICIA UEMATSU RCE NO. 36762 PRINCIPAL ENGINEER DATE

IRVINE RANCH WATER DISTRICT
BAKER WATER TREATMENT PLANT
PROJECT NO. 11218

CHEMICAL BUILDING AQUEOUS AMMONIA ENLARGED PLAN

DRAWING **E750**
SHEET **543** OF **632**

LAST SAVED BY: ypsee LAST UPDATED: 01/18/2012 11:52 AM FILENAME: 6232-E750.dwg

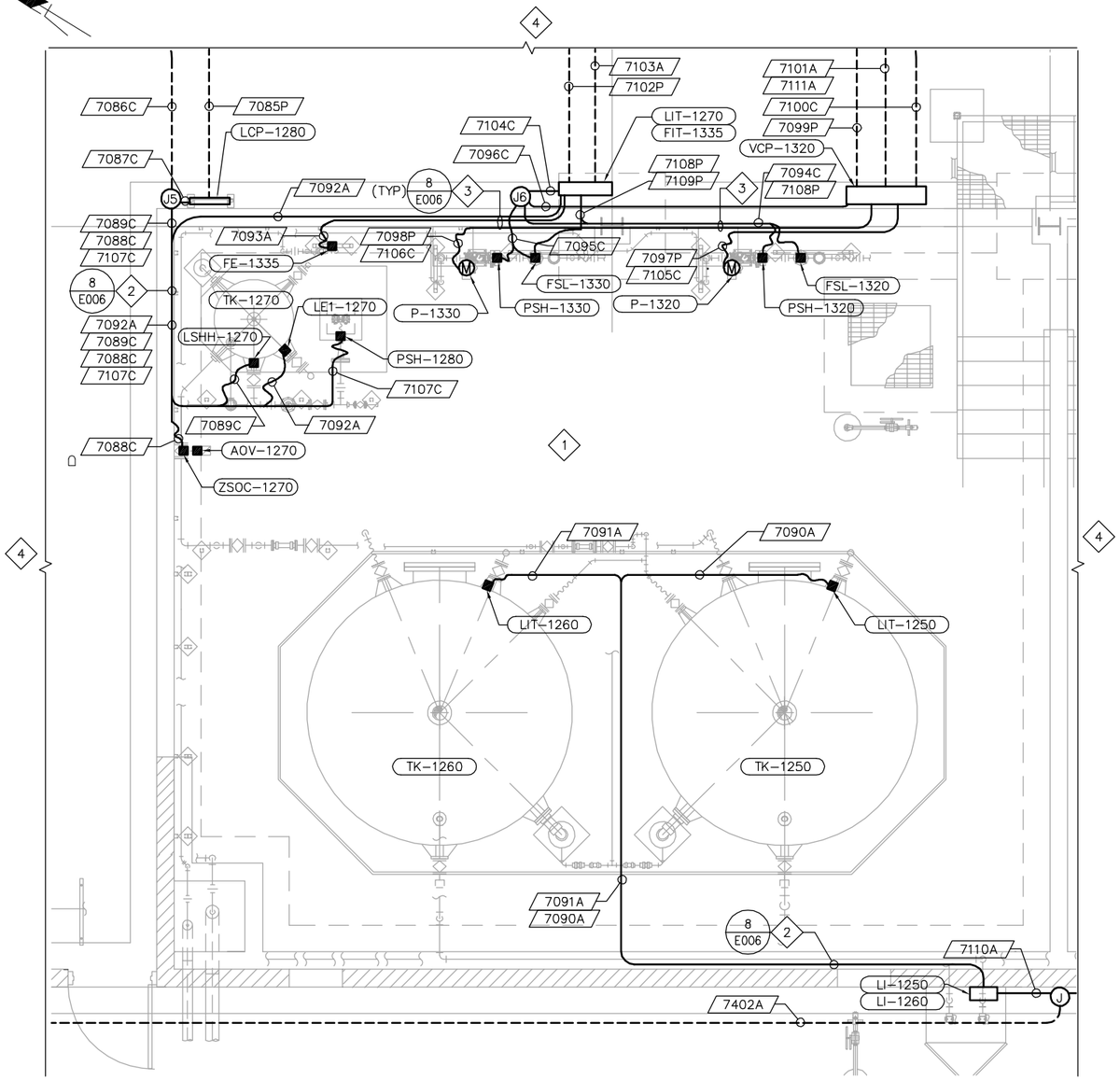

CAUSTIC SODA PLAN

SCALE: 3/8" = 1'-0"

NOTES:

1. NO CONDUIT SHALL BE ROUTED UNDER THE CONTAINMENT AREA AND CONTAINMENT WALL PENETRATION IS PROHIBITED. ALL CONDUIT ROUTING SHALL BE ABOVE CONTAINMENT WALL HEIGHT WITH PROPER SUPPORT. CONDUIT SHALL BE INSTALLED BASED ON FIELD CONDITIONS. FIELD RELOCATE IF REQUIRED. CONTRACTOR TO SUBMIT CONDUIT SUPPORT LAYOUT FOR ENGINEER APPROVAL PRIOR TO INSTALLATION.
2. WALL MOUNTED CONDUIT. ABOVE CONTAINMENT WALL.
3. MOUNT CONDUIT AT THE OUTER SIDE OF THE CONTAINMENT WALL
4. DWG E704 FOR CONTINUATION

EQUIPMENT TAG NUMBERS ON THIS DRAWING ARE PRECEDED W/ **07-CS-** UNLESS OTHERWISE LABELED

No.	DATE	REVISIONS	APPROVED

DESIGNED: YPS
DRAWN: YPS
CHECKED: RVT

RBF CONSULTING

carollo

IRVINE RANCH WATER DISTRICT

RHONDA V. TIEJERINA REE NO. 15473 ELECTRICAL ENGINEER DATE
CINDY MILLER RCE NO. 58116 PROJECT MANAGER DATE
PATRICIA UEMATSU RCE NO. 36762 PRINCIPAL ENGINEER DATE

IRVINE RANCH WATER DISTRICT
BAKER WATER TREATMENT PLANT
PROJECT NO. 11218

CHEMICAL BUILDING CAUSTIC SODA ENLARGED PLAN

DRAWING **E760**

SHEET **544** OF **632**

LAST SAVED BY: ypsee LAST UPDATED: 01/18/2012 11:53 AM FILENAME: 6232-E760.dwg

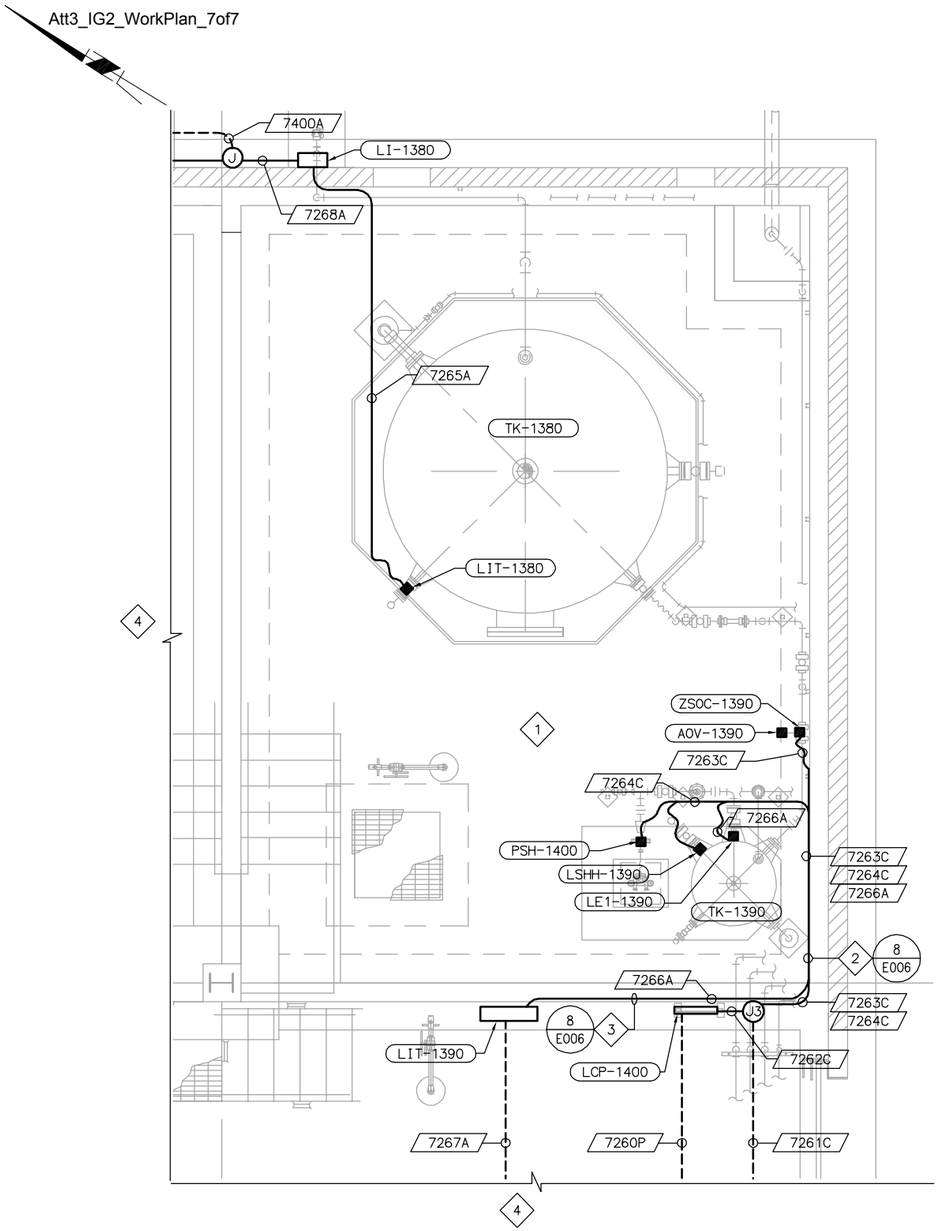

CITRIC ACID PLAN

SCALE: 3/8" = 1'-0"

NOTES:

1. NO CONDUIT SHALL BE ROUTED UNDER THE CONTAINMENT AREA AND CONTAINMENT WALL PENETRATION IS PROHIBITED. ALL CONDUIT ROUTING SHALL BE ABOVE CONTAINMENT WALL HEIGHT WITH PROPER SUPPORT. CONDUIT SHALL BE INSTALLED BASED ON FIELD CONDITIONS. FIELD RELOCATE IF REQUIRED. CONTRACTOR TO SUBMIT CONDUIT SUPPORT LAYOUT FOR ENGINEER APPROVAL PRIOR TO INSTALLATION.
2. WALL MOUNTED CONDUIT. ABOVE CONTAINMENT WALL.
3. MOUNT CONDUIT AT THE OUTER SIDE OF THE CONTAINMENT WALL
4. SEE DWG E704 FOR CONTINUATION

EQUIPMENT TAG NUMBERS ON THIS DRAWING ARE PRECEDED W/ **07-CA-** UNLESS OTHERWISE LABELED

No.	DATE	REVISIONS	APPROVED

DESIGNED: YPS
DRAWN: YPS
CHECKED: RVT

RBF CONSULTING

carollo

IRVINE RANCH WATER DISTRICT

RHONDA V. TIEJERINA REE NO. 15473 ELECTRICAL ENGINEER DATE
CINDY MILLER RCE NO. 58116 PROJECT MANAGER DATE
PATRICIA UEMATSU RCE NO. 36762 PRINCIPAL ENGINEER DATE

IRVINE RANCH WATER DISTRICT
BAKER WATER TREATMENT PLANT
PROJECT NO. 11218

CHEMICAL BUILDING CITRIC ACID ENLARGED PLAN

DRAWING **E770**
SHEET **545** OF **632**

FILENAME: 6232-E770.dwg
LAST UPDATED: 01/16/2012 02:02 PM
LAST SAVED BY: ypsee

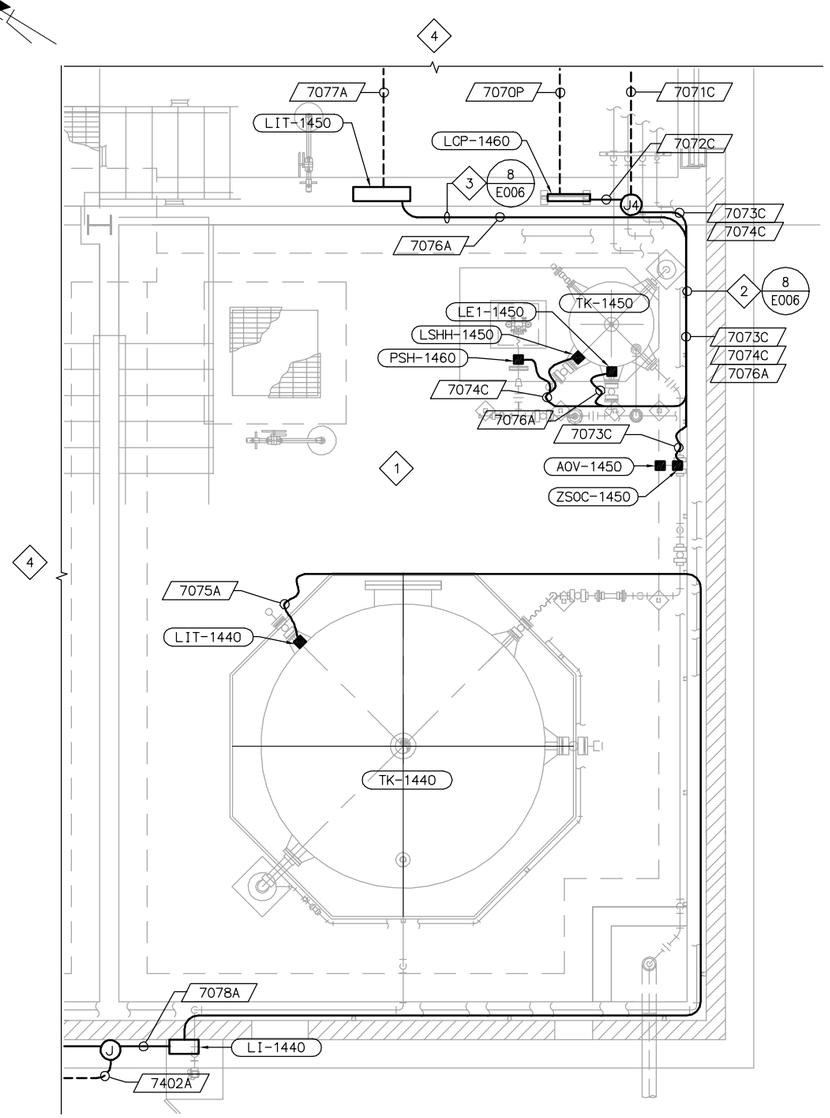

SODIUM BISULFITE PLAN

SCALE: 3/8" = 1'-0"

NOTES:

1. NO CONDUIT SHALL BE ROUTED UNDER THE CONTAINMENT AREA AND CONTAINMENT WALL PENETRATION IS PROHIBITED. ALL CONDUIT ROUTING SHALL BE ABOVE CONTAINMENT WALL HEIGHT WITH PROPER SUPPORT. CONDUIT SHALL BE INSTALLED BASED ON FIELD CONDITIONS. FIELD RELOCATE IF REQUIRED. CONTRACTOR TO SUBMIT CONDUIT SUPPORT LAYOUT FOR ENGINEER APPROVAL PRIOR TO INSTALLATION.
2. WALL MOUNTED CONDUIT. ABOVE CONTAINMENT WALL.
3. MOUNT CONDUIT AT THE OUTER SIDE OF THE CONTAINMENT WALL

DWG E704 FOR CONTINUATION

EQUIPMENT TAG NUMBERS ON THIS DRAWING ARE PRECEDED W/ **07-SB-** UNLESS OTHERWISE LABELED

No.	DATE	REVISIONS	APPROVED

DESIGNED: YPS
DRAWN: YPS
CHECKED: RVT

RBF CONSULTING

carollo

IRVINE RANCH WATER DISTRICT

RHONDA V. TIEJERINA REE NO. 15473 ELECTRICAL ENGINEER DATE
CINDY MILLER RCE NO. 58116 PROJECT MANAGER DATE
PATRICIA UEMATSU RCE NO. 36762 PRINCIPAL ENGINEER DATE

IRVINE RANCH WATER DISTRICT
BAKER WATER TREATMENT PLANT
PROJECT NO. 11218

CHEMICAL BUILDING SODIUM BISULFITE ENLARGED PLAN

DRAWING **E775**
SHEET **546** OF **632**

LAST SAVED BY: ypsee LAST UPDATED: 01/18/2012 11:54 AM FILENAME: 6232-E775.dwg

	DRAWING VISIBLE FIELDS	FIELD - 1	FIELD - 2	FIELD - 3	FIELD - 4	FIELD - 5
SCADA SYSTEM HUMAN MACHINE INTERFACE	1 - TAG 2 - LOOP NUMBER 3 - FUNCTION 4 - DESCRIPTION 5 - DESCRIPTION	REFER 1 2	REFER 3	ACTION ALARM NUM - NUMERIC SP - SET POINT STATUS TREND	DESCRIPTION 2 5	DESCRIPTION
PLC HARDWIRED I/O POINT	1 - TAG 2 - LOOP NUMBER 3 - FUNCTION 4 - DESCRIPTION 5 - LOCATION	REFER 1 2 4	REFER 3	AI - ANALOG INPUT AO - ANALOG OUTPUT DI - DISCRETE INPUT DO - DISCRETE OUTPUT HSC - HIGH SPEED COUNTER INPUT RTD - RTD INPUT	DESCRIPTION	PLC - PROGRAMABLE LOGIC CONTROLLER NO. VCP - VENDOR CONTROL PANEL NO.
PLC I/O REGISTER (FIELDBUS I/O)	1 - TAG 2 - LOOP NUMBER 3 - FUNCTION 4 - DESCRIPTION 5 - LOCATION	REFER 1 2	REFER 3	BUS ID ENET-# ETHERNET DEVNET-# DEVICENET FF-# FOUNDATION FIELDBUS MBVS-# MODBUS + PROF-# PROFIBUS	DESCRIPTION	PLC - PROGRAMABLE LOGIC CONTROLLER NO. VCP - VENDOR CONTROL PANEL NO.
PLC BASED HUMAN MACHINE INTERFACE	1 - TAG 2 - LOOP NUMBER 3 - FUNCTION 4 - DESCRIPTION 5 - LOCATION	REFER 1 2	REFER 3	ACTION ALARM NUM - NUMERIC SP - SET POINT STATUS	DESCRIPTION 2 5	HMI - HUMAN MACHINE INTERACE NO. LCP - LOCAL CONTROL PANEL NO PCM - PROCESS CONTROL MODULE NO. VCP - VENDOR CONTROL PANEL NO.
PILOT DEVICE OPERATOR INTERFACE	1 - TAG 2 - LOOP NUMBER 3 - FUNCTION 4 - DESCRIPTION 5 - LOCATION	REFER 2	REFER 3	AM - AUTO/MANUAL FRLR - FIXED RATE/LEVEL RATE HOA - HAND /OFF/AUTO JOHC - JOG OPEN/HOLD/CLOSE JOJC - JOG OPEN/JOG CLOSE LH - LOW/HIGH LOR - LOCAL/OFF/REMOTE LOS - LOCK OUT STOP LS - LEAD/STANDBY LSR - LOCAL/STOP/REMOTE NOOT - NO OFFLINE/OFFLINE TRANSITION OC - OPEN/CLOSE OLOL - ON LINE/OFF LINE OO - OFF/ON OSC - OPEN/STOP/CLOSE RST - RESET SAAM - SEMI AUTO/AUTO/MANUAL SEL - SELECT SP - STOP SPD - SPEED SS - START/STOP ST - START	DESCRIPTION	LCP - LOCAL CONTROL PANEL NO. MCC - MOTOR CONTROL CENTER NO. PCM - PROCESS CONTROL MODULE NO. VCP - VENDOR CONTROL PANEL NO. VFD - VARIABLE FREQUENCY DRIVE NO.
POWER DEVICE PRIMARY FUNCTION OPERATOR ACCESSIBLE	1 - TAG 2 - LOOP NUMBER 3 - FUNCTION 4 - VOLTAGE/PHASE 5 - LOCATION	CB - CIRCUIT BREAKER DISC - DISCONNECT FU - FUSE	REFER 3	TM - THERMAL MAGNETIC CIRCUIT BREAKER	24VDC - 1P 120VAC - 1P 208VAC - 2P 208VAC - 3P 240VAC - 3P 240VAC - 2P 480VAC - 3P 2400VAC - 3P 4160VAC - 3P	DP - DISTRIBUTION PANEL NO. LCP - LOCAL CONTROL PANEL NO. LP - LIGHTING PANEL NO. MCC - MOTOR CONTROL CENTER NO. PCM - PROCESS CONTROL MODULE NO. PP - POWER PANEL NO. VCP - VENDOR CONTROL PANEL NO.
POWER DEVICE AUXILIARY FUNCTION FOR OPERATOR ACCESSIBLE DEVICES	1 - TAG 2 - LOOP NUMBER 3 - DESCRIPTION 4 - DESCRIPTION 5 - DESCRIPTION	DISC - DISCONNECT	REFER 3	DESCRIPTION	DESCRIPTION	DESCRIPTION
POWER DEVICE PRIMARY FUNCTION OPERATOR INACCESSIBLE	1 - TAG 2 - LOOP NUMBER 3 - FUNCTION 4 - VOLTAGE/PHASE 5 - LOCATION	CB - CIRCUIT BREAKER FU - FUSE	REFER 3	MCP - MOTOR CIRCUIT PROTECTOR SS - SOLID STATE CIRCUIT BREAKER TM - THERMAL MAGNETIC CIRCUIT BREAKER	24VDC - 1P 120VAC - 1P 208VAC - 2P 208VAC - 3P 240VAC - 2P 240VAC - 3P 480VAC - 3P 2400VAC - 3P 4160VAC - 3P	DP - DISTRIBUTION PANEL NO. LCP - LOCAL CONTROL PANEL NO. LP - LIGHTING PANEL NO. MCC - MOTOR CONTROL CENTER NO. PCM - PROCESS CONTROL MODULE NO. PP - POWER PANEL NO. VCP - VENDOR CONTROL PANEL NO.

	DRAWING VISIBLE FIELDS	FIELD - 1	FIELD - 2	FIELD - 3	FIELD - 4	FIELD - 5
POWER DEVICE AUXILIARY FUNCTION FOR OPERATOR INACCESSIBLE DEVICES	1 - TAG 2 - LOOP NUMBER 3 - DESCRIPTION 4 - DESCRIPTION 5 - DESCRIPTION	AUX - AUXILIARY INTERLOCK/CONTACT CPT - CONTROL POWER TRANSFORMER DISC - DISCONNECT OL - OVERLOAD RELAY	REFER 3	DESCRIPTION	DESCRIPTION	DESCRIPTION
INSTRUMENT PRIMARY ELEMENT	1 - TAG 2 - LOOP NUMBER 3 - FUNCTION 4 - FURNISHED BY 5 - LOCATION	REFER 1	REFER 3	DESCRIPTION 5	DESCRIPTION 6	AREA NO. BUILDING NO. ROOM NO.
INSTRUMENT/CONTROL ELEMENT PRIMARY FUNCTION OPERATOR ACCESSIBLE	1 - TAG 2 - LOOP NUMBER 3 - FUNCTION 4 - FURNISHED BY 5 - DESCRIPTION	REFER 1	REFER 3	DESCRIPTION 5	DESCRIPTION 6	DESCRIPTION
INSTRUMENT/CONTROL ELEMENT AUXILIARY FUNCTION OPERATOR ACCESSIBLE	1 - TAG 2 - LOOP NUMBER 3 - FUNCTION 4 - FURNISHED BY 5 - DESCRIPTION	REFER 1	REFER 3	DESCRIPTION	DESCRIPTION 6	DESCRIPTION
INSTRUMENT/CONTROL ELEMENT PRIMARY FUNCTION OPERATOR INACCESSIBLE	1 - TAG 2 - LOOP NUMBER 3 - FUNCTION 4 - FURNISHED BY 5 - LOCATION	REFER 1 XR - PROTECTION RELAY CR - CONTROL RELAY IR - INTERPOSING RELAY	REFER 3	DESCRIPTION	DESCRIPTION 6	LCP - LOCAL CONTROL PANEL NO. MCC - MOTOR CONTROL CENTER NO. PCM - PROCESS CONTROL MODULE NO. VCP - VENDOR CONTROL PANEL NO.
INSTRUMENT/CONTROL ELEMENT AUXILIARY FUNCTION OPERATOR INACCESSIBLE	1 - TAG 2 - LOOP NUMBER 3 - FUNCTION 4 - FURNISHED BY 5 - LOCATION	REFER 1 XR - PROTECTION RELAY CR - CONTROL RELAY IR - INTERPOSING RELAY	REFER 3	DESCRIPTION	DESCRIPTION 6	LCP - LOCAL CONTROL PANEL NO. MCC - MOTOR CONTROL CENTER NO. PCM - PROCESS CONTROL MODULE NO. VCP - VENDOR CONTROL PANEL NO.
FIELD EQUIPMENT NON-POWERED	1 - TAG 2 - LOOP NUMBER 3 - FUNCTION/SIZE 4 - FURNISHED BY 5 - LOCATION	REFER 3	REFER 3	DESCRIPTION	DESCRIPTION 6	AREA NO. BUILDING NO. ROOM NO.
FIELD EQUIPMENT PRIMARY FUNCTION POWERED	1 - TAG 2 - LOOP NUMBER 3 - FUNCTION 4 - FURNISHED BY 5 - LOCATION	REFER 3	REFER 3	DESCRIPTION	DESCRIPTION 6	AREA NO. BUILDING NO. ROOM NO.
FIELD EQUIPMENT AUXILIARY FUNCTION POWERED	1 - TAG 2 - LOOP NUMBER 3 - FUNCTION 4 - DESCRIPTION 5 - DESCRIPTION	MWH - MOTOR WINDING HEATER TSH - TEMPERATURE SWITCH XSH - TORQUE SWITCH	REFER 3	DESCRIPTION	DESCRIPTION	DESCRIPTION
FIELD EQUIPMENT STARTER/DRIVE	1 - TAG 2 - LOOP NUMBER 3 - TYPE 4 - VOLTAGE/PHASE 5 - LOCATION	MS - MOTOR STARTER RVAT - REDUCED VOLTAGE AUTO TRANSFORMER STARTER RVSS - REDUCED VOLTAGE SOLID STATE STARTER VFD - VARIABLE FREQUENCY DRIVE	REFER 3	FVNR - FULL VOLTAGE NON-REVERSING STARTER FVR - FULL VOLTAGE REVERSING STARTER PWS - PART-WINDING STARTER RVAT - REDUCED VOLTAGE AUTO TRANSFORMER STARTER RVSS - REDUCED VOLTAGE SOLID STATE STARTER TS1W - TWO SPEED SINGLE WINDING TS2W - TWO SPEED TWO WINDINGS VFD - VARIABLE FREQUENCY DRIVE	120VAC - 1P 208VAC - 2P 208VAC - 3P 240VAC - 2P 240VAC - 3P 480VAC - 3P 2400VAC - 3P 4160VAC - 3P	LCP - LOCAL CONTROL PANEL NO. MCC - MOTOR CONTROL CENTER NO. PCM - PROCESS CONTROL MODULE NO. VCP - VENDOR CONTROL PANEL NO.

1 - 2
3
4
5

INSTRUMENT BUBBLE LOCATIONS

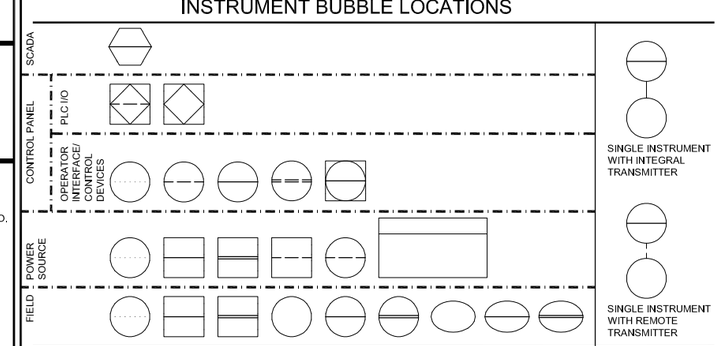

NOTES

1. INSTRUMENT TAG IDENTIFICATION LETTERS TABLE
2. OPERATOR PILOT DEVICE LEGEND
3. EQUIPMENT TAGGING TABLE
4. I/O TYPE DESIGNATIONS TABLE
5. INSTRUMENT TYPE DESIGNATIONS TABLE
6. FURNISHED BY:
   - FBACS FURNISHED BY AIR COMPRESSOR SUPPLIER
   - FBCDSS FURNISHED BY CHLORINE DIOXIDE SYSTEM SUPPLIER
   - FBHVAC FURNISHED BY HVAC SYSTEM SUPPLIER
   - FBMSS FURNISHED BY MEMBRANE SYSTEM SUPPLIER
   - FBO FURNISHED BY OWNER
   - FBV FURNISHED BY VENDOR
   - FBUVS FURNISHED BY UV SYSTEM SUPPLIER

FILENAME: 81227A10-6232-10 PM
LAST UPDATED: 12/14/2011 01:16
LAST SAVED BY: bcoplen

No.	DATE	REVISIONS	APPROVED

DESIGNED: MGH
DRAWN: DKI
CHECKED: TAH

RBF CONSULTING
carollo
IRVINE RANCH WATER DISTRICT

JIM MEYERHOFER	RCE NO. 48451	PROJECT MANAGER	DATE
CINDY MILLER	RCE NO. 58116	PROJECT MANAGER	DATE
PATRICIA UEMATSU	RCE NO. 36762	PRINCIPAL ENGINEER	DATE

IRVINE RANCH WATER DISTRICT
BAKER WATER TREATMENT PLANT
PROJECT NO. 11218

INSTRUMENTATION ABBREVIATIONS & SYMBOLS-1

DRAWING I001

INSTRUMENT TAG IDENTIFICATION LETTERS

	MEASURED VARIABLE \ INSTRUMENT FUNCTION	PRIMARY ELEMENT	TRANSMITTER	INDICATING TRANSMITTER	RECORDING TRANSMITTER	SOLENOIDS, RELAYS	INDICATOR	RECORDER	CONTROLLER	INDICATING CONTROLLER	RECORDING CONTROLLER	SWITCH LOW LOW	SWITCH LOW	SWITCH HIGH	SWITCH HIGH HIGH	SWITCH COMBINATION HIGH LOW	TEST POINT	ALARM LOW LOW	ALARM LOW	ALARM HIGH	ALARM HIGH HIGH	ALARM COMBINATION HIGH LOW	SELF ACTUATED CONTROL VALVE	VIEWING DEVICE OR GLASS	WELL OR PROBE	SAFETY DEVICE
A	ANALYSIS	AE	AT	AIT	ART	AY	AI	AR	AC	AIC	ARC	ASLL	ASL	ASH	ASHH	ASHL	AP	AALL	AAL	AAH	AAHH	AAHL			AW	
B	BURNER/COMBUSTION	BE	BT	BIT	BRT	BY	BI	BR	BC	BIC	BRC	BSLL	BSL	BSH	BSHH			BALL	BAL	BAH	BAHH	BAHL		BG	BW	
D	DENSITY	DE	DT	DIT	DRT	DY	DI	DR	DC	DIC	DRC	DSLL	DSL	DSH	DSHH	DSHL	DP	DALL	DAL	DAH	DAHH	DAHL	DCV			
E	VOLTAGE	EE	ET	EIT	ERT	EY	EI	ER	EC	EIC	ERC	ESLL	ESL	ESH	ESHH	ESHL		EALL	EAL	EAH	EAHH	EAHL				
F	FLOW RATE	FE	FT	FIT	FRT	FY	FI	FR	FC	FIC	FRC	FSLL	FSL	FSH	FSHH	FSHL	FP	FALL	FAL	FAH	FAHH	FQI	FCV	FG		
FF	FLOW RATIO				FFRT		FFI	FFR	FFC	FFIC	FFRC	FFSLL	FFSL	FFSH	FFSHH	FFSHL		FFALL	FFAL	FFAH	FFAHH	FFAHL				
FQ	FLOW QUANTITY	FQE	FQT	FQIT	FQRT	FQY	FQI	FQR	FQC	FQIC	FQRC	FQSLL	FQSL	FQSH	FQSHH	FQSLL		FQALL	FQAL	FQAH	FQAHH	FQAHL				
H	HAND								HC	HIC		HSLL	HSL	HSH	HSHH	HSHL										
I	CURRENT	IE	IT	IIT	IRT	IY	II	IR	IC	IIC	IRC	ISLL	ISL	ISH	ISHH	ISHL		IALL	IAL	IAH	IAHH	IAHL				
J	POWER	JE	JT	JIT	JRT	JY	JI	JR	JC	JIC	JRC	JSLL	JSL	JSH	JSHH	JSHL		JALL	JAL	JAH	JAHH	JAHL				
K	TIME	KE	KT	KIT	KRT	KY	KI	KR	KC	KIC	KRC	KSLL	KSL	KSH	KSHH	KSHL		KALL	KAL	KAH	KAHH	KAHL	KCV			
L	LEVEL	LE	LT	LIT	LRT	LY	LI	LR	LC	LIC	LRC	LSLL	LSL	LSH	LSHH	LSHL		LALL	LAL	LAH	LAHH	LAHL	LCV	LG	LW	
M	MOISTURE	ME	MT	MIT	MRT	MY	MI	MR	MC	MIC	MRC	MSLL	MSL	MSH	MSHH	MSHL	MP	MALL	MAL	MAH	MAHH	MAHL			MW	
P	PRESSURE	PE	PT	PIT	PRT	PY	PI	PR	PC	PIC	PRC	PSLL	PSL	PSH	PSHH	PSHL	PP	PALL	PAL	PAH	PAHH	PAHL	PCV			PSV
PD	DIFFERENTIAL PRESSURE	PE	PDT	PDIT	PDRT	PDY	PDI	PDR	PDC	PDIC	PDRC	PDSLL	PDSL	PDSH	PDSHH	PDSHL	PP	PDALL	PDAL	PDAH	PDAHH	PDAHL	PDCV			
Q	QUANTITY	QE	QT	QIT	QRT	QY	QI	QR	QC	QIC	QRC	QSLL	QSL	QSH	QSHH	QSHL		QALL	QAL	QAH	QAHH	QAHL				
R	RADIATION	RE	RT	RIT	RRT	RY	RI	RR	RC	RIC	RRC	RSLL	RSL	RSH	RSHH	RSHL		RALL	RAL	RAH	RAHH	RAHL			RW	
S	SPEED	SE	ST	SIT	SRT	SY	SI	SR	SC	SIC	SRC	SSLL	SSL	SSH	SSHH	SSHL		SALL	SAL	SAH	SAHH	SAHL				
T	TEMPERATURE	TE	TT	TIT	TRT	TY	TI	TR	TC	TIC	TRC	TSLL	TSL	TSH	TSHH	TSHL	TP	TALL	TAL	TAH	TAHH	TAHL	TCV		TW	
TD	DIFFERENTIAL TEMPERATURE	TE	TDT	TDIT	TDRT	TDY	TDI	TDR	TDC	TDIC	TDRC	TDSLL	TDSL	TDSH	TDSHH	TDSHL	TP	TDALL	TDAL	TDAH	TDAHH	TDAHL	TDCV		TW	
V	VIBRATION	VE	VT	VIT	VRT	VY	VI	VR	VC	VIC	VRC	VSLL	VSL	VSH	VSHH	VSHL		VALL	VAL	VAH	VAHH	VAHL				
W	WEIGHT/FORCE	WE	WT	WIT	WRT	WY	WI	WR	WC	WIC	WRC	WSLL	WSL	WSH	WSHH	WSHL		WALL	WAL	WAH	WAHH	WAHL				
WD	DIFFERENTIAL WEIGHT/FORCE	WE	WDT	WDIT	WDRT	WDY	WDI	WDR	WDC	WDIC	WDRC	WDSLL	WDSL	WDSH	WDSHH	WSDHL		WDALL	WDAL	WDAH	WDAHH	WDAHL				
Y	EVENT/STATE/PRESENCE	YE	YT	YIT	YRT	YY	YI	YR	YC	YIC	YRC	YSLL	YSL	YSH	YSHH	YSHL		YALL	YAL	YAH	YAHH	YAHL				
Z	POSITION/DIMENSION	ZE	ZT	ZI	ZRT	ZY	ZJ	ZR	ZC	ZIC	ZRC	ZSLL	ZSL	ZSH	ZSHH	ZSHL		ZALL	ZAL	ZAH	ZAHH	ZAHL	ZCV			
ZD	GAUGING/DEVIATION	ZDE	ZDT	ZDIT	ZDRT	ZDY	ZDI	ZDR	ZDC	ZDIC	ZDRC	ZDSLL	ZDSL	ZDSH	ZDSHH	ZDSHL		ZDALL	ZDAL	ZDAH	ZDAHH	ZDAHL	ZDCV			

OPERATOR PILOT DEVICE LEGEND

PILOT DEVICE FUNCTION / DEVICE TYPE	LOCAL-OFF-REMOTE (LOR)	STOP (SP)	START (ST)	HAND-OFF-AUTO (HOA)	OFF-ON (OO)	SELECT (SEL)	OPEN-STOP-CLOSE (OSC)	JOG OPEN-HOLD-CLOSE (JOHC)	SEMI/AUTO-AUTO-MANUAL (SAAM)	LEAD-STANDBY (LS)	JOG OPEN-JOG CLOSE (JOJC)	ONLINE-OFFLINE (OLOL)	AUTO-MANUAL (AM)	FIXED RATE-LEVEL RATE (FRLR)	OPEN-CLOSE (OC)	NO OFFLINE-OFFLINE TRANSITION (NOOT)	LOW-HIGH (LH)	RESET (RST)	SPEED (SPD)	START-STOP (SS)	LOCAL-STOP-REMOTE (LSR)	BYPASS			SELECTION	POSITION (POS)(POT)
PILOT DEVICE TAG (HAND SWITCHES)	HSA*	HSB	HSC	HSD	HSE	HSF	HSG	HSH	HSI	HSJ	HSK	HSL	HSM	HSN	HSO	HSP	HSQ	HSR	HSS	HST	HSU	HSV	HSW	HSX	HSY	HSZ
SCADA/HMI TAG (HAND ACTION)	HAA	HAB	HAC	HAD	HAE	HAF	HAG	HAH	HAI	HAJ	HAK	HAL	HAM	HAN	HAO	HAP	HAQ	HAR	HAS	HAT	HAU	HAV	HAW	HAX	HAY	HAZ

* HSA# # = 1, 2, 3 ETC. AND REPRESENTS A UNIQUE IDENTIFIER

I/O TYPE DESIGNATIONS

HS	REMOTE STATUS	HKR	MOTOR START REVERSE
HK	RUN	HKS	MOTOR STOP
HK	MOTOR START	SC	SPEED SIGNAL
HKC	SOLENOID VALVE CLOSE	YS	RUNNING
HKC	VALVE CLOSE	YSF	RUNNING FORWARD
HKF	MOTOR START FORWARD	YSH	RUNNING HIGH
HKH	MOTOR START HIGH	YSL	RUNNING LOW
HKL	MOTOR START LOW	YSR	RUNNING REVERSE
HKO	SOLENOID VALVE OPEN	UA	FAILED
HKO	VALVE OPEN		

INSTRUMENT TYPE DESIGNATIONS

AM	AMMONIA	O3	OZONE	SC	STREAMING CURRENT
CAP	CAPACITANCE	ORP	OXIDATION REDUCTION POTENTIAL	SH	SODIUM HYPOCHLORITE
CG	COMBUSTIBLE GAS	P	PRESSURE	TDR	TIME DOMAIN REFLECTOMETRY
CL	CHLORINE	P-SUB	PRESSURE SUBMERSIBLE	TH	THERMAL
COND	CONDUCTIVITY	PC	PARTICLE COUNTER	TSS	TOTAL SUSPENDED SOLIDS
DO	DISSOLVED OXYGEN	PO	PHOSPHOROUS	TURB	TURBIDITY
FMCW	FREQ. MODULATED CONT. WAVE	PTOF	PULSE TIME OF FLIGHT	US	ULTRASONIC
HSF	FLUORIDE	R/I	RESISTANCE TO CURRENT	UVI	UV INTENSITY
IS	INTRINSIC SAFETY BARRIER	ROT	ROTAMETER	UVT	UV TRANSMITTANCE
LEL	LOWER EXPLOSIVE LIMIT	RTD	RESISTANCE TEMP DETECTOR	VAC	VACUUM
MAG	MAGNETIC				

SPECIFIC ABBREVIATIONS

APH	A PHASE	HTU	HEAT TRACE UNIT
BPH	B PHASE	MWH	MOTOR WINDING HEATER
BRB	BEARING BOTTOM	SSG	SECONDARY SWITCHGEAR
BRT	BEARING TOP	SV*	SOLENOID VALVE
BTFLY	BUTTERFLY	TVSS	TRANSIENT VOLTAGE SURGE SUPPRESSOR
CPH	C PHASE	UPS	UNINTERRUPTIBLE POWER SUPPLY
CC*	CALIBRATION COLUMN * = 1, 2, 3, ETC.		
HTR	HEATER		

* CC# AND SV# # = 1, 2, 3 ETC. AND REPRESENTS A UNIQUE IDENTIFIER

INSTRUMENT LINE SYMBOLS

SOC WMA

- INSTRUMENT OR CONNECTION TO PROCESS
- PNEUMATIC SYMBOL
- ELECTRIC SYMBOL
- HYDRAULIC SYMBOL — L — L — L — L — L —
- CAPILLARY TUBE
- ELECTROMAGNETIC OR SONIC SIGNAL (GUIDED)
- ELECTROMAGNETIC OR SONIC SIGNAL (NOT GUIDED)
- INTERNAL SYSTEM LINK (SOFTWARE OR DATA LINK) — o — o — o — o — o —
- COPPER ETHERNET — C — C — C — C — C —
- FIBER OPTIC ETHERNET — F — F — F — F — F —
- WIRELESS ETHERNET — W — W — W — W —
- PROFIBUS DP — DP — DP — DP — DP —
- PROFIBUS PA — PA — PA — PA — PA —
- DEVICENET — D — D — D — D — D —

PROCESS LINE SYMBOLS

- PRIMARY PROCESS FLOW IN PIPE
- SECONDARY PROCESS FLOW IN PIPE
- PRIMARY PROCESS FLOW IN CHANNEL
- SECONDARY PROCESS FLOW IN CHANNEL

DESIGNATIONS

- FUTURE
- OR
- FUTURE
- EQUIPMENT ENCLOSURE
- EXISTING
- OR
- EXISTING
- ADDITION OR NEW THIS CONSTRUCTION

MISCELLANEOUS P&ID SYMBOLS

- CHEMICAL INJECTION POINT — CHEMICAL / SHEET NO.
- PIPE CALLOUT — PIPE SIZE; UNIQUE IDENTIFIER; CONTINUATION FROM SHEET; CONTINUATION TO SHEET
- CONTINUATION TAG — A; B C

FILENAME: 8127A10-6232-I002.dwg
LAST UPDATED: 12/14/2011 01:16 PM
LAST SAVED BY: broepken

No.	DATE	REVISIONS	APPROVED

DESIGNED: MGH
DRAWN: DKI
CHECKED: TAH

RBF CONSULTING
carollo
IRVINE RANCH WATER DISTRICT

JIM MEYERHOFER	RCE NO. 48451	PROJECT MANAGER	DATE
CINDY MILLER	RCE NO. 58116	PROJECT MANAGER	DATE
PATRICIA UEMATSU	RCE NO. 36762	PRINCIPAL ENGINEER	DATE

IRVINE RANCH WATER DISTRICT
BAKER WATER TREATMENT PLANT
PROJECT NO. 11218

INSTRUMENTATION ABBREVIATIONS & SYMBOLS-2

DRAWING I002

ACTUATORS

- DIAPHRAGM
- ELECTRIC DISCRETE
- ELECTRIC MODULATING
- ELECTRIC HYDRAULIC
- HAND
- HYDRAULIC
- SOLENOID

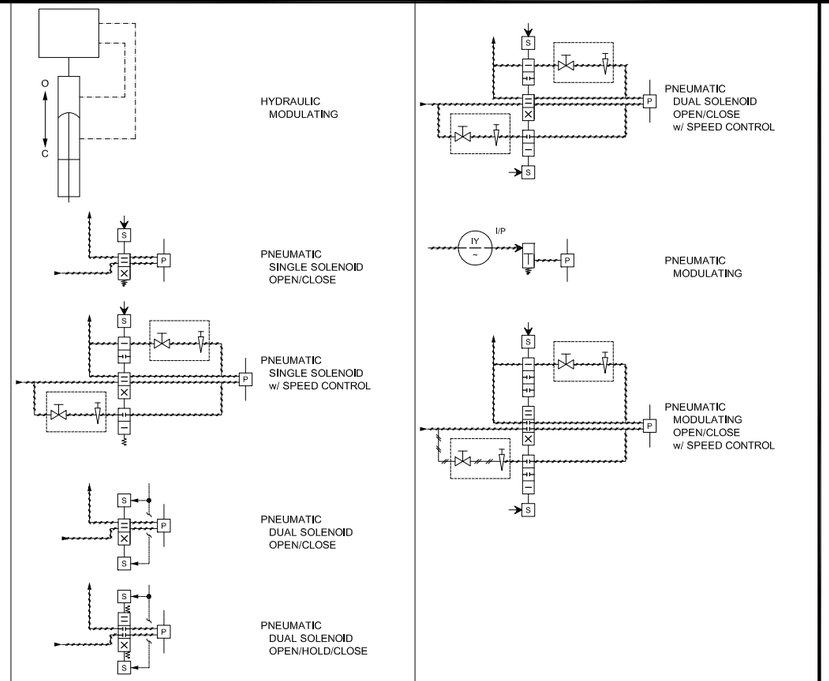

PIPING

Attachment 1

- AIR GAP
- BLIND FLANGE
- CAPPED OR PLUGGED
- CONCENTRIC INCREASER
- CONCENTRIC REDUCER
- DRAIN
- ECCENTRIC INCREASER
- ECCENTRIC REDUCER
- EXPANSION COUPLING
- EXPANSION JOINT VIBRATION CENTER
- FLEXIBLE CONNECTION
- QUICK DISCONNECT
- UNION

PUMPS

- AIR DRIVEN
- CENTRIFUGAL
- CHEMICAL FEED DIAPHRAM
- DIAPHRAGM
- GEAR
- PERISTALTIC OR HOSE
- PISTON
- PROGRESSIVE CAVITY
- SUBMERSIBLE
- VERTICAL TURBINE
- VERTICAL CHOPPER
- WATER CHAMP

BLOWERS/COMPRESSORS

- CENTRIFUGAL SINGLE STAGE BLOWER
- CENTRIFUGAL MULTI STAGE BLOWER
- RECIPROCATING COMPRESSOR
- SCREW COMPRESSOR
- FAN
- LIQUID RING COMPRESSOR
- ROTARY LOBE BLOWER

CHECK VALVES

- BACK FLOW PREVENTOR
- BALL
- DIAPHRAGM CHECK
- DOUBLE FLAP
- FLAPPER
- SPRING LOADED GENERAL
- SPRING LOADED SWING
- SWING

PRESSURE VALVES

- BACKPRESSURE REGULATING SELF CONTAINED
- BACKPRESSURE REGULATING EXTERNAL TAP
- PRESSURE REDUCING SELF CONTAINED
- PRESSURE REDUCING EXTERNAL PRESSURE TAP
- REGULATING
- PRESSURE RELIEF
- VACUUM RELIEF

VALVES

- 3-WAY
- 3-WAY PLUG
- 4-WAY
- AIR-RELIEF
- ANGLE
- BALL
- BALL V-NOTCH
- BUTTERFLY
- BUTTERFLY-BURIED VALVE BOX
- CONE
- DIAPHRAGM
- GATE
- GATE-BURIED VALVE BOX
- GLOBE
- HOSE
- MUD
- NEEDLE
- PINCH
- PLUG ECCENTRIC
- PLUG ECCENTRIC w-VALVE BOX
- PLUG ECCENTRIC LUBRICATED
- PLUG ECCENTRIC LUBRICATED BURIED VALVE BOX
- PLUG CONCENTRIC
- PLUG CONCENTRIC -BURIED VALVE BOX
- PLUG CONCENTRIC LUBRICATED
- PLUG CONCENTRIC LUBRICATED BURIED VALVE BOX
- PUMP DISCHARGE
- TELESCOPING

VALVE DESIGNATIONS

NO	NORMALLY OPEN
NC	NORMALLY CLOSED
FO	FAIL OPEN
FC	FAIL CLOSE
FLP	FAIL LAST POSITION

MISC

- AIR DAMPER
- AIR/CHEMICAL DIFFUSER
- ANNULAR SEAL
- BASKET STRAINER
- BLOW-OFF SILENCER
- CALIBRATION COLUMN
- COALESCER
- DESICCANT DRYER
- DIAPHRAGM SEAL
- EDUCTOR/EJECTOR
- EYEWASH
- EXHAUST FAN
- FILTER
- FILTER SEPARATOR
- FINE FILTER
- FIRE ALARM/SENSOR
- FLAME ARRESTER
- FLAME ARRESTER w/THERMALLY OPERATED VALVE
- FLOW CONDITIONER
- FLOW-THROUGH TEE FOR ANALYZER PROBE
- GAS CANNON
- GRINDER
- HEAT EXCHANGER
- HOIST
- HORIZONTAL MIXER
- HOSE CONNECTION
- INLET STRAINER
- INLINE STATIC MIXER
- MATERIAL CHANGE
- MIXER
- MOTOR
- NOZZLE
- ORIFICE RESTRICTION
- PERISTALTIC COMPOSITE SAMPLER
- OR PULSATION DAMPENER
- REFRIGERATED DRYER
- RUPTURE DISK
- SAMPLE PORT
- SANITARY SEAL
- SIGHT TUBE
- SMOKE DETECTOR
- STRAINER - MECHANICALLY CLEANED
- STRAINER WITH BLOW OFF
- STRAINER WYE TYPE
- VAPOR HEATER
- VAPORIZER
- VENT TO ATMOSPHERE

FILENAME: 8127A10-6232-I003.dwg LAST UPDATED: 12/14/2011 01:10 PM LAST SAVED BY: broepken

No.	DATE	REVISIONS	APPROVED

DESIGNED: MGH
DRAWN: DKI
CHECKED: TAH

RBF CONSULTING

carollo

IRVINE RANCH WATER DISTRICT

JIM MEYERHOFER	RCE NO. 48451	PROJECT MANAGER	DATE
CINDY MILLER	RCE NO. 58116	PROJECT MANAGER	DATE
PATRICIA UEMATSU	RCE NO. 36762	PRINCIPAL ENGINEER	DATE

IRVINE RANCH WATER DISTRICT
BAKER WATER TREATMENT PLANT
PROJECT NO. 11218

INSTRUMENTATION ABBREVIATIONS & SYMBOLS-3

DRAWING I003

Attachment 3

SOC WMA

GATES

SIDE VIEW

- SLIDE
- SLUICE
- STOP

PLAN VIEW

- FLAP
- KNIFE
- SLIDE
- SLUICE
- STOP
- WEIR

FLUMES

- LEOPOLD-LAGCO
- PALMER-BOWLUS
- PARSHALL
- REGULAR CUTTHROAT
- TRAPEZOIDAL

FLOW METERS

- BATCH
- CORIOLIS
- MAGNETIC
- ORIFICE
- PADDLE WHEEL
- PITOT TUBE AVERAGING
- PITOT TUBE/ ANNUBAR
- POSITIVE-DISPLACEMENT
- PROPELLER-TURBINE
- ROTAMETER
- THERMAL
- ULTRASONIC DOPPLER
- ULTRA-SONIC TRANSIT TIME
- V-CONE
- VENTURI TUBE OR FLOW NOZZLE
- VORTEX

LEVEL

- BUBBLER
- CAPACITANCE
- DIFFERENTIAL PRESSURE (TANK)
- ELECTRODE
- FLOAT
- INVERTED COLUMN
- RADAR PTOF
- RADAR TDR
- SUSPENDED/ SUBMERSIBLE
- ULTRASONIC

TEMPERATURE

- TEMPERATURE w/THERMOWELL
- THERMAL BIMETALLIC
- THERMOMETER

WEIRS

- RECTANGULAR w/o END CONTRACTIONS
- RECTANGULAR w/ END CONTRACTIONS
- V-NOTCH (TRIANGULAR)
- TRAPEZOIDAL (CIPOLLETTI)

PRESSURE/ VACUUM

- DIFFERENTIAL
- GAUGE
- GAUGE DIFFERENTIAL
- LINE MOUNTED
- MANOMETER
- PRESSURE LEAD LINE
- PRESSURE SWITCH

WEIGHT

- HYDRAULIC
- STRAIN GAUGE

FILENAME:8127A10-6232-I004.dwg

LAST UPDATED: 12/14/2011 01:16 PM

LAST SAVED BY: broepken

No.	DATE	REVISIONS	APPROVED

DESIGNED: MGH

DRAWN: DKI

CHECKED: TAH

RBF CONSULTING

carollo

IRVINE RANCH WATER DISTRICT

JIM MEYERHOFER	RCE NO. 48451	PROJECT MANAGER	DATE
CINDY MILLER	RCE NO. 58116	PROJECT MANAGER	DATE
PATRICIA UEMATSU	RCE NO. 36762	PRINCIPAL ENGINEER	DATE

IRVINE RANCH WATER DISTRICT
BAKER WATER TREATMENT PLANT
PROJECT NO. 11218

INSTRUMENTATION ABBREVIATIONS & SYMBOLS-4

DRAWING I004

SHEET 550 OF 632

TAG NUMBERING

XXX- PROCESS STREAM

AA	AQUA AMMONIA
CA	CITRIC ACID
CAW	CHANNEL AGITATION WATER
CDO	CHLORINE DIOXIDE
CS	CAUSTIC SODA
CW	POTABLE WATER (COLD)
D	DRAIN
FLW	FILTERED WATER
FSW	FIRE SUPPRESSION WATER
HCL	HYDROCHLORIC ACID
HW	POTABLE WATER (HOT)
HWR	HOT WATER RETURN
HWS	HOT WATER SUPPLY
MFW	MEMBRANE FEED WATER
MFWW	MEMBRANE FILTRATION WASTE WASHWATER
PA	PLANT AIR
PC	PRIMARY COAGULANT
PW	PRODUCT WATER
RW	RAW WATER
SA	SAMPLE LINE
SB	SODIUM BISULFITE
SC	SODIUM CHLORITE
SH	SODIUM HYPOCHLORITE
SL	SLUDGE
SPW	SOFTENED POTABLE WATER
SUW1	SOFTENED UTILITY WATER 1
SUW2	SOFTENED UTILITY WATER 2
SWW	STRAINER WASTE WASHWATER
UCF	UV REACTOR CLEANING FEED
UCR	UV REACTOR CLEANING RETURN
UW1	UTILITY WATER 1
UW2	UTILITY WATER 2
XR	EXCESS RECIRCULATION

PLANT PROCESS AREA

100	FLOW CONTROL FACILITY, RAW WATER PUMP STATION, TRABUCO CANYON PUMP STATION
200	FOREBAY, MF FEED PUMP STATION, MF STRAINERS, FLASH MIX
300	MF FILTRATION RACKS, UV DISINFECTION
400	CT BASIN
500	CLEARWELL, FINISHED WATER, PRODUCT WATER PUMP STATION, PUMP-IN METER VAULT
600	MF WASTEWATER
700	CHEMICAL FEED SYSTEMS

TAG NUMBERING EXAMPLE

FEED WATER PUMP NO. 1 = 02-MFW-P-0310

PLANT PROCESS AREA (OMIT LAST 2 DIGITS)	(02)	=	FEED WATER PUMP STATION
PROCESS STREAM	(MFW)	=	MEMBRANE FEED WATER
EQUIPMENT FUNCTIONAL DESCRIPTION	(P)	=	PUMP
EQUIPMENT ID NUMBER	(0310)		

XXXX- EQUIPMENT FUNCTIONAL DESCRIPTION

AC	AIR CONDITIONING PACKAGE UNIT	MBK	MAIN BREAKER
AHU	AIR HANDLER	MCC	MOTOR CONTROL CENTER
ARV	AIR RELIEF VALVE	MDRV	MAGNETIC DRIVE
ATS	AUTOMATIC TRANSFER SWITCH	MOV	MOTORIZED VALVE OPERATOR
AV	AIR VAC	MP	METERING PUMP
AVNT	AUTOMATIC AIR VENT	MS	MOTOR STARTER
BAT	BATTERY BANK	MSB	MAIN SWITCH BOARD
BCH	BATTERY CHARGER	MTG	METERING SECTION
BCP	BRANCH CIRCUIT PANEL	MTR	MOTOR
BFP	BACK FLOW PREVENTER	MXR	MIXER
BFV	BUTTERFLY VALVE	NET	NETWORK
BKR	BREAKER (POWER)	NSO	RELAY, NEGATIVE SEQUENCE OVERCURRENT
BLV	BALANCING VALVE	NV	NEEDLE VALVE
BOL	BOILER	OPS	OPERATOR
BPV	BACK PRESSURE VALVE	P	PUMP
BSR	BARSCREEN, RAKE	PD	PULSATION DAMPENER
BV	BALL VALVE	PIPE	PIPING
BWR	BLOWER	PIV	PINCH VALVE
CEN	CENTRIFUGE	PLC	PROGRAMMABLE LOGIC CONTROLLER
CF	CARTRIDGE FILTER	PM	POWER MONITOR
CHL	CHLORINATOR	PRD	PRESSURE REDUCING VALVE
CHR	CHILLER	PRG	PRESSURE REGULATING VALVE
CLF	CLARIFIER	PRV	PRESSURE RELIEF VALVE/PRESSURE REDUCING VALVE
CLR	COLLECTOR, SLUDGE OR SCUM	PRVB	PRESSURE RELIEF/VACUUM BREAKER
CMP	COMPRESSOR	PTEQ	PORTABLE EQUIPMENT
CND	CONDENSOR	PTS	POTENTIAL TRANSFORMER
CON	CONTROLLER, MOTOR, ELECTRONIC	PUR	PURIFIER
CP	PANEL (CONTROL, FIELD)	PV	PLUG VALVE
CRN	CRANE	PVD	RELAY, DIFFERENTIAL VOLTAGE
CT	CURRENT TRANSFORMER	PWR	RELAY, PILOT WIRE DIFFERENTIAL
CTW	COOLING TOWER	PWS	RELAY, PILOT WIRE SENDING
CUB	CUBICLE	REF	REFRIGERATOR, STORAGE
CV	CHECK VALVE	REG	REGULATOR
CVY	CONVEYOR	RLY	RELAY
CW, HW	POTABLE WATER (COLD AND HOT)	RPD	REDUCED PRINCIPLE DEVICE
D	DRAIN	RPR	RELAY, POWER DIFFERENTIAL
DG	DEGASSIFIER	SBD	RELAY, STATIC DIFFERENTIAL
DLN	DRIVE LINE	SBK	STANDBY POWER BREAKER
DP	DISTRIBUTION PANEL 480V OR 240V	SBR	SCRUBBER
DPR	RELAY, MACHINE DIFFERENTIAL	SCPR	SERVICE CONNECTION PRESSURE REGULATOR
DRY	DRYER	SF	SUPPLY FAN
EF	EXHAUST FAN	SFR	RELAY, STATIC FREQUENCY
ELV	ELEVATOR	SLV	SLEEVE VALVE
ENG	ENGINE	SOF	SOFTENER
EVP	EVAPORATOR	SPR	SEPARATOR
EW	EYE WASH (SAFETY SHOWER)	STR	STRAINER
EXR	EXCHANGER	STRC	STRUCTURE
F	FAN	SUW2	SOFTENED UTILITY WATER 2
FBK	FEEDER BREAKER	SV	SOLENOID VALVE
FIX	FIXTURE, LIGHTING	SVR	SERVER
FLA	FLAME ARRESTOR	SWBD	SWITCHBOARD
FLR	FLARE	SWCH	ETHERNET SWITCH
FLT	FILTER	SWGR	SWITCHGEAR
FLV	FLAPPER VALVE	SWI	SWITCH
FP	FEED PUMP	SWP	SWEEP ARM ASSEMBLY
FPP	FIBER OPTIC PATCH PANEL	SYN	RELAY, SYNC CHECK
FRM	FRAME	TBC	TURBOCHARGER
FRQ	RELAY, FREQUENCY	TBK	TIE BREAKER
FRX	FIRE EXTINGUISHER	TCV	THROTTLE CONTROL VALVE
FSW	FIRE SUPPRESSION WATER	TK	TANK
GAT	GATE	TOC	RELAY, TIME OVERCURRENT
GBK	GENERATOR BREAKER	TOU	RELAY, TIME OVER/UNDER VOLTAGE
GBX	GEARBOX	TRP	TRAP
GDR	GRINDER	TSV	TELESCOPING VALVE
GEN	GENERATOR	TUR	TURBINE
GEX	GENERATOR EXCITER	TUV	RELAY, TIME VOLTAGE
GLV	GLOVE VALVE	TWR	TOWER (SURGE)
GOP	GATE OPERATOR	UPS	UNINTERRUPTABLE POWER SUPPLY
GV	GATE VALVE	UVS	RELAY, UNDER VOLTAGE AND PHASE SEQUENCE
HMI	HUMAN MACHINE INTERFACE	VB	VACUUM BREAKER (WATER)
HTR	HEATER	VBR	RELAY, VOLTAGE BALANCE
HWR	HOT WATER RETURN	VDC	DOUBLE CHECKVALVE (FIRE SYSTEM)
HWS	HOT WATER SUPPLY	VEHL	VEHICLE
HX	HEAT EXCHANGER	VFD	VARIABLE FREQUENCY DRIVE
IOC	RELAY, INSTANTANEOUS OVERCURRENT	VKG	KNIFE GATE VALVE
IRC	IRRIGATION CONTROLLER	VNTV	VENT VALVE
ITC	RELAY, INS/TIME OVERCURRENT	VRD	RELAY, RESTRAINED DIRECTIONAL OVERCURRENT
LER	RELAY, LOSS OF EXCITATION	WS	WORK STATION
LP	LIGHTING PANEL/LOW VOLTAGE PANEL	XFMR	TRANSFORMER
M	MECHANICAL EQUIPMENT		

GENERAL ABBREVIATIONS

FILENAME:8127A10–6232–I005.dwg

LAST UPDATED: 01/31/2012 10:33 AM

LAST SAVED BY: mmorris

No.	DATE	REVISIONS	APPROVED

DESIGNED: MGH
DRAWN: DKI
CHECKED: TAH

RBF CONSULTING

carollo

IRVINE RANCH WATER DISTRICT

JIM MEYERHOFER	RCE NO. 48451	PROJECT MANAGER	DATE
CINDY MILLER	RCE NO. 58116	PROJECT MANAGER	DATE
PATRICIA UEMATSU	RCE NO. 36762	PRINCIPAL ENGINEER	DATE

IRVINE RANCH WATER DISTRICT
BAKER WATER TREATMENT PLANT
PROJECT NO. 11218

INSTRUMENTATION
PROCESS EQUIPMENT TAGGING

DRAWING I005

SHEET 551 OF 632

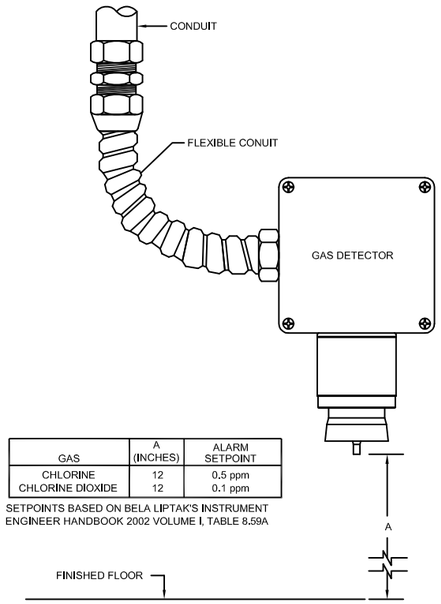

GAS	A (INCHES)	ALARM SETPOINT
CHLORINE	12	0.5 ppm
CHLORINE DIOXIDE	12	0.1 ppm

SETPOINTS BASED ON BELA LIPTAK'S INSTRUMENT ENGINEER HANDBOOK 2002 VOLUME I, TABLE 8.59A

NA001 TYP — GAS DETECTOR MOUNTING DETAIL

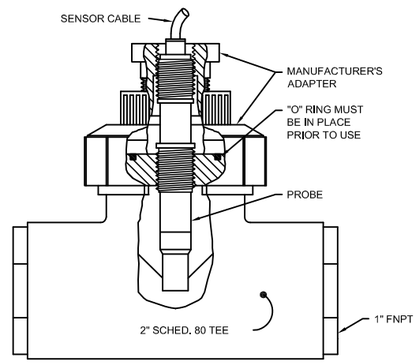

NOTE:

PROBE AND TEE SHALL BE INSTALLED IN SUCH A MANNER THAT THE PROBE IS SUBMERGED UNDER ALL CONDITIONS.

NA013 TYP — AMPEROMETRIC FLOW THROUGH TEE WITH ADAPTER

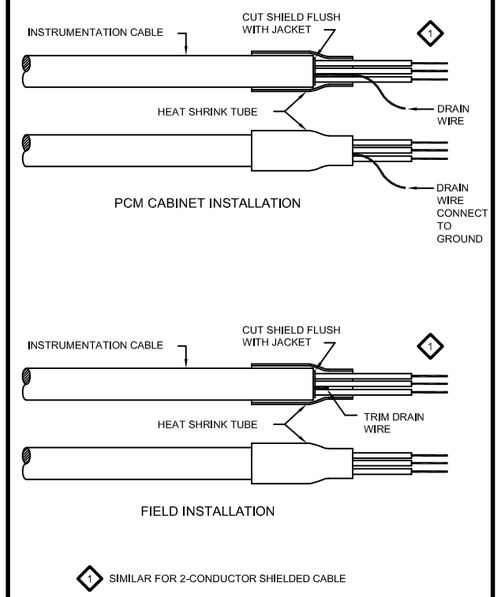

NE101 TYP — INSTRUMENTATION SHIELDED CABLE TERMINATION DETAILS

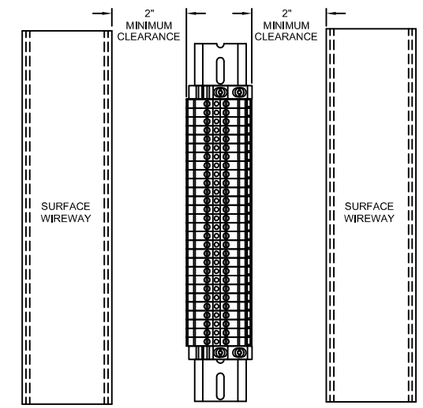

NE102 TYP — TERMINAL BLOCK CLEARANCE

GENERAL NOTE:

1. INSTRUMENTATION TYPICAL DETAILS APPLY TO ALL INSTRUMENTS INSTALLED BY THE CONTRACTOR, INCLUDING OFF-SKID INSTRUMENTS PROVIDED BY THE MEMBRANE SYSTEM SUPPLIER AND INSTALLED BY THE CONTRACTOR.

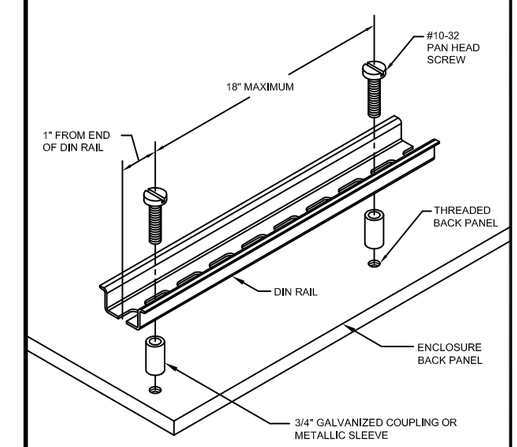

NE103 TYP — DIN RAIL MOUNTING

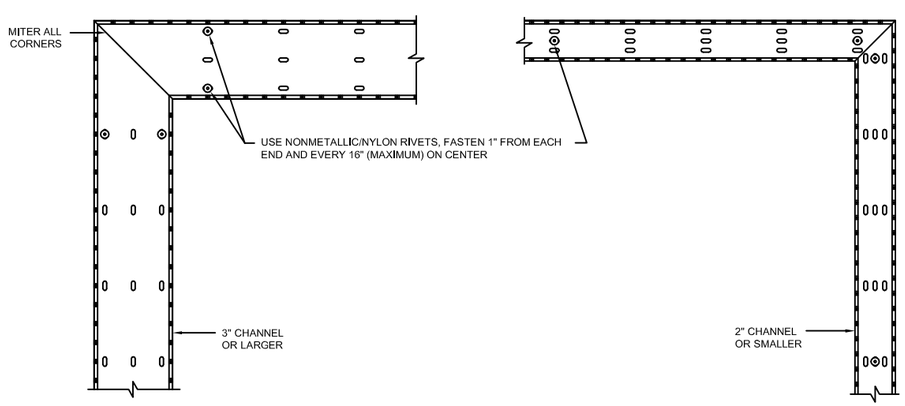

NE105 TYP — PANEL WIRING DUCT

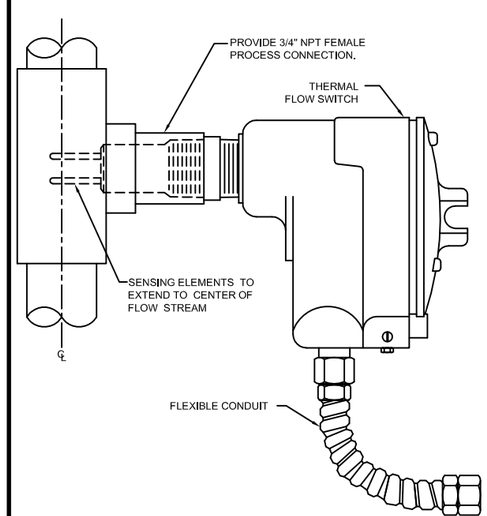

NF111 TYP — THERMAL FLOW SWITCH MOUNTING DETAIL

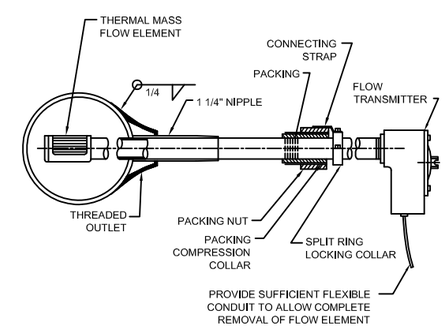

NOTES:

1. LENGTH OF PROBE TO BE DETERMINED BY MFG.

NF112 TYP — THERMAL MASS FLOWMETER INSTALLATION DETAIL

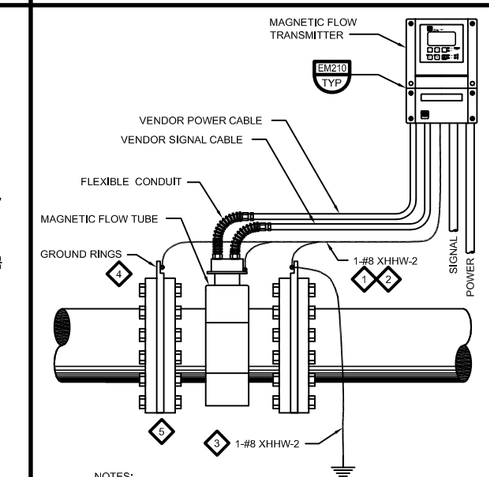

NOTES:

1. VERIFY ZERO POTENTIAL BETWEEN FLOW TUBE, EARTH GROUND AND TRANSMITTER GROUND TERMINAL.
2. CONNECT TRANSMITTER GROUND TERMINAL TO GROUND RINGS.
3. CONNECT METER BODY TO EARTH GROUND POTENTIAL.
4. EQUALIZE POTENTIAL VIA GROUND RINGS BETWEEN FLUID AND MAGMETER.
5. INSTALL MAGMETER IN COMPLIANCE WITH MANUFACTURER'S RECOMMENDED UPSTREAM AND DOWNSTREAM STRAIGHT PIPE RUN.

NF135 TYP — REMOTE TRANSMITTER MAGNETIC FLOW METER GROUNDING DETAIL

FILENAME: 8127A10-6232-I006.dwg
LAST UPDATED: 01/31/2012 10:35 AM
LAST SAVED BY: mmorris

No.	DATE	REVISIONS	APPROVED

DESIGNED: MGH
DRAWN: TLF
CHECKED: TAH

RBF CONSULTING
carollo
IRVINE RANCH WATER DISTRICT

JIM MEYERHOFER	RCE NO. 48451	PROJECT MANAGER	DATE
CINDY MILLER	RCE NO. 58118	PROJECT MANAGER	DATE
PATRICIA UEMATSU	RCE NO. 38762	PRINCIPAL ENGINEER	DATE

IRVINE RANCH WATER DISTRICT
BAKER WATER TREATMENT PLANT
PROJECT NO. 11218

INSTRUMENTATION TYPICAL DETAILS - 1

DRAWING I006

SHEET 552 OF 632

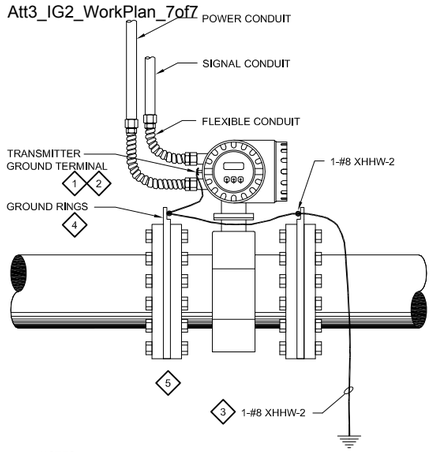

NOTES:

1. CONTRACTOR SHALL VERIFY ZERO POTENTIAL BETWEEN FLOW TUBE, EARTH GROUND AND TRANSMITTER GROUND TERMINAL.
2. CONNECT TRANSMITTER GROUND TERMINAL TO GROUND RINGS.
3. CONNECT METER BODY TO EARTH GROUND POTENTIAL.
4. EQUALIZE POTENTIAL VIA GROUND RINGS BETWEEN FLUID AND MAGMETER.
5. INSTALL MAGMETER IN COMPLIANCE WITH MANUFACTURER'S RECOMMENDED UPSTREAM AND DOWNSTREAM STRAIGHT PIPE RUN.

NF136 TYP — INTEGRAL MAGNETIC FLOW METER GROUNDING DETAIL

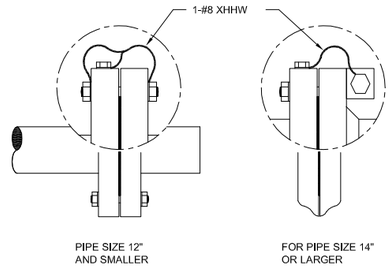

NOTES:

1. PIPE SIZES 12" AND SMALLER:
   a. THE GROUND CABLE IS IN DIRECT CONTACT WITH THE CONDUCTIVE FLANGE COATING AND IS SECURED BY THE FLANGE BOLTS.
2. PIPE SIZES 14" AND LARGER:
   a. THE GROUND CABLE IS IN DIRECT CONTACT WITH THE CONDUCTIVE FLANGE COATING AND IS SECURED BY THE FLANGE BOLTS. PIPE SIZES 14" AND LARGER

NF137 TYP — GROUND RING CONNECTION DETAIL

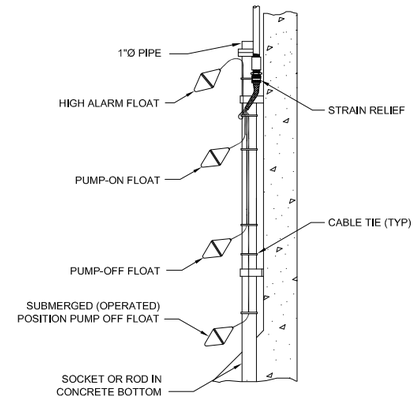

NOTES:

1. NUMBER OF FLOATS SHALL BE AS SHOWN ON SCHEMATICS AND P&IDS.
2. FLOATS SHOWN IN FREE HANGING POSITION.

NL100 TYP — FLOAT SWITCH INSTALLATION

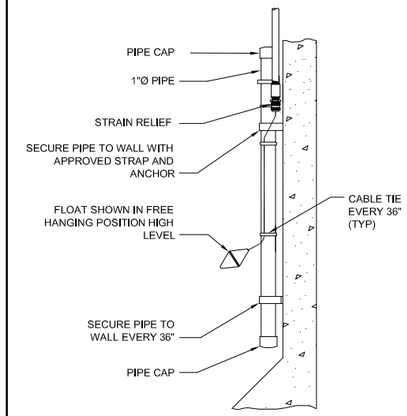

NL101 TYP — FLOAT SWITCH INSTALLATION

GENERAL NOTE:

1. INSTRUMENTATION TYPICAL DETAILS APPLY TO ALL INSTRUMENTS INSTALLED BY THE CONTRACTOR, INCLUDING OFF-SKID INSTRUMENTS PROVIDED BY THE MEMBRANE SYSTEM SUPPLIER AND INSTALLED BY THE CONTRACTOR.

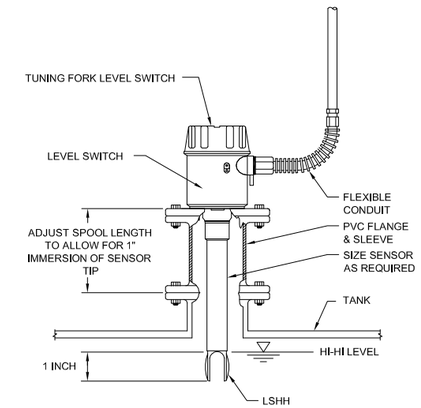

NL116 TYP — TUNING FORK HIGH LEVEL SWITCH MOUNTING DETAIL

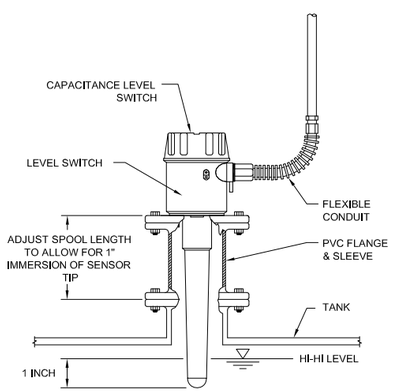

NL117 TYP — CAPACITANCE LEVEL SENSOR MOUNTING DETAIL

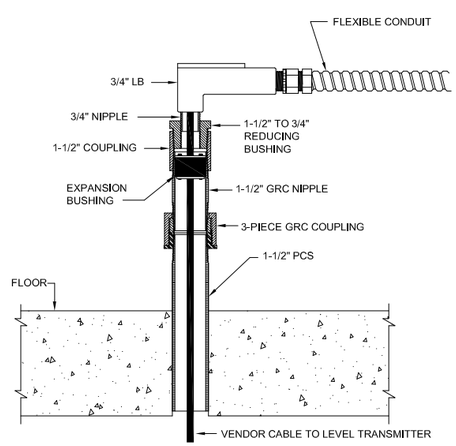

NL130 TYP — DROP-IN LEVEL TRANSMITTER MOUNTING DETAIL

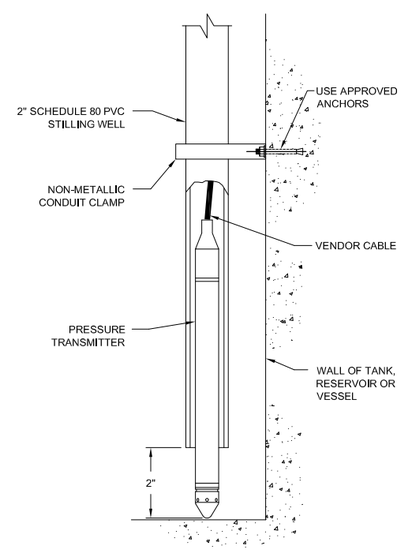

NL131 TYP — DROP IN PRESSURE TRANSMITTER MOUNTING DETAIL

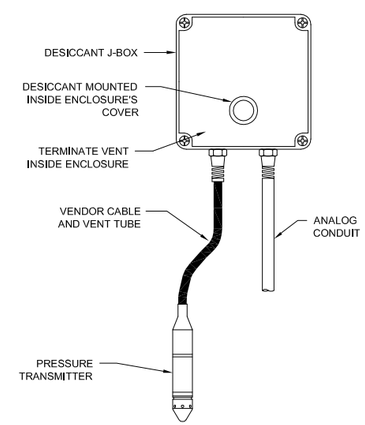

NL132 TYP — DROP IN PRESSURE TRANSMITTER DESICCANT J-BOX DETAIL

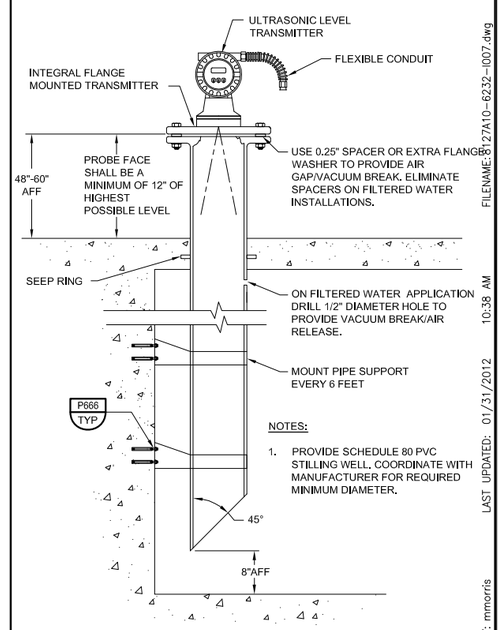

NOTES:

1. PROVIDE SCHEDULE 80 PVC STILLING WELL. COORDINATE WITH MANUFACTURER FOR REQUIRED MINIMUM DIAMETER.

NL140 TYP — ULTRASONIC LEVEL TRANSDUCER STILLING WELL MOUNTING DETAIL

No.	DATE	REVISIONS	APPROVED

DESIGNED: MGH
DRAWN: TLF
CHECKED: TAH

RBF CONSULTING — carollo — IRVINE RANCH WATER DISTRICT

JIM MEYERHOFER	RCE NO. 48451	PROJECT MANAGER	DATE
CINDY MILLER	RCE NO. 58116	PROJECT MANAGER	DATE
PATRICIA UEMATSU	RCE NO. 36762	PRINCIPAL ENGINEER	DATE

IRVINE RANCH WATER DISTRICT
BAKER WATER TREATMENT PLANT
PROJECT NO. 11218

INSTRUMENTATION TYPICAL DETAILS - 2

DRAWING I007

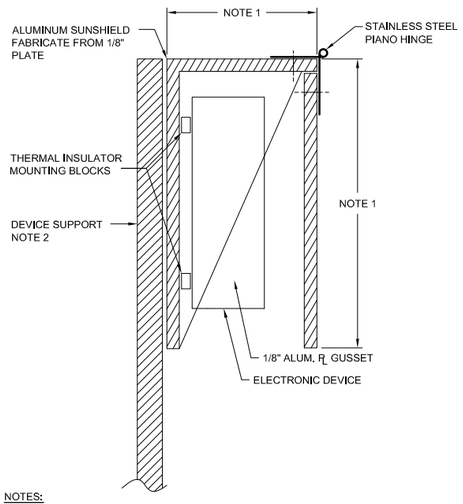

NOTES:

1. SUNSHIELD DIMENSIONS SHALL EXCEED THOSE OF THE ELECTRONIC DEVICE BY 2" ON ALL SIDES.
2. WHEN WALL MOUNTED, USE 4 STAINLESS STEEL ANCHOR BOLTS. WHEN MOUNTED ON HANDRAIL, USE STAINLESS STEEL U-BOLTS, NUTS & WASHERS.

NM107 TYP — SUNSHIELD MOUNTING DETAIL

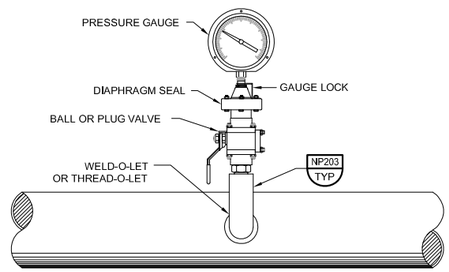

NP104 TYP — PRESSURE GAUGE MOUNTING DETAIL

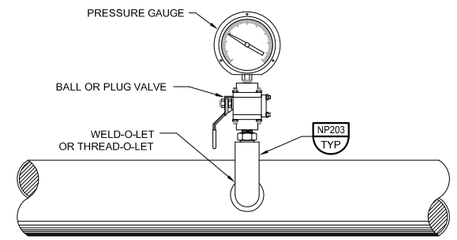

NP105 TYP — PRESSURE GAUGE MOUNTING DETAIL

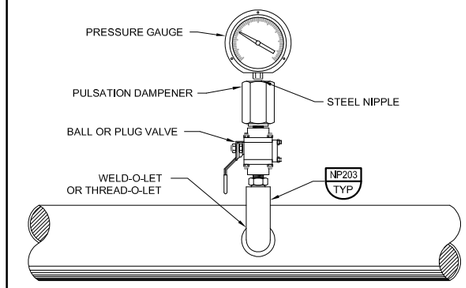

NP110 TYP — PRESSURE GAUGE WITH PULSATION DAMPENER

GENERAL NOTE:

1. INSTRUMENTATION TYPICAL DETAILS APPLY TO ALL INSTRUMENTS INSTALLED BY THE CONTRACTOR, INCLUDING OFF-SKID INSTRUMENTS PROVIDED BY THE MEMBRANE SYSTEM SUPPLIER AND INSTALLED BY THE CONTRACTOR.

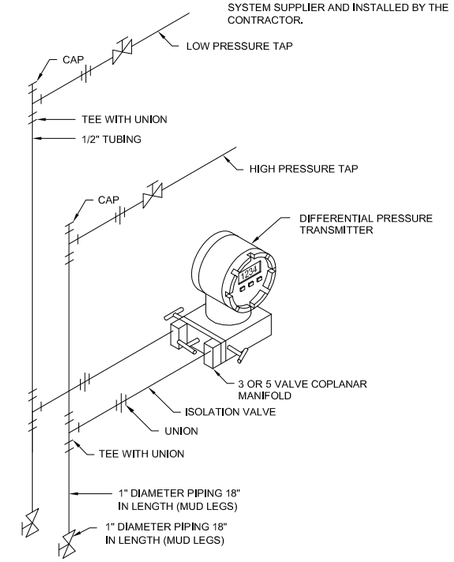

SLOPE ALL HORIZONTAL RUNS AT LEAST 1" PER 1'- 0"

NP120 TYP — DIFFERENTIAL PRESSURE INSTRUMENT INSTALLATION

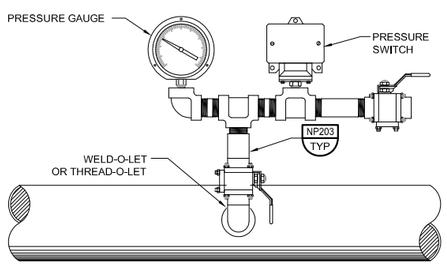

NP147 TYP — PRESSURE SWITCH & GAUGE DETAIL

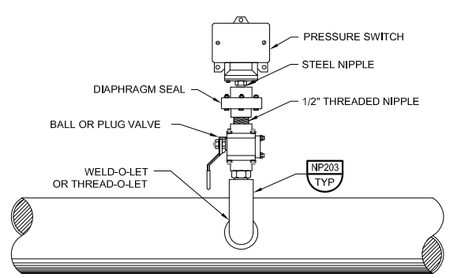

NP150 TYP — PRESSURE SWITCH MOUNTING DETAIL

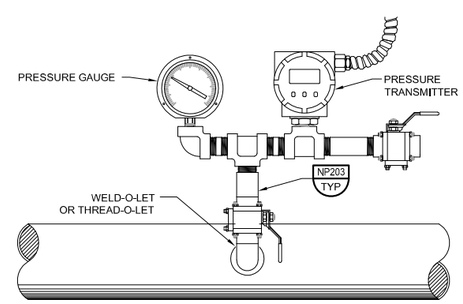

NP189 TYP — PRESSURE TRANSMITTER & GAUGE DETAIL

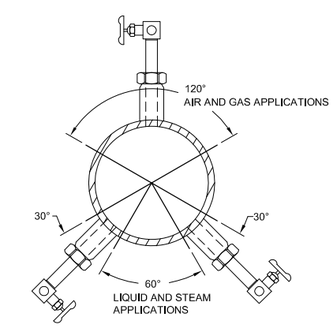

INSTALLATION OF PROBE OR TAP LOCATION DEPENDING ON STATE OF MEASURED MEDIUM

NP203 TYP — PRESSURE OR FLOW INSTRUMENT INSTALLATION

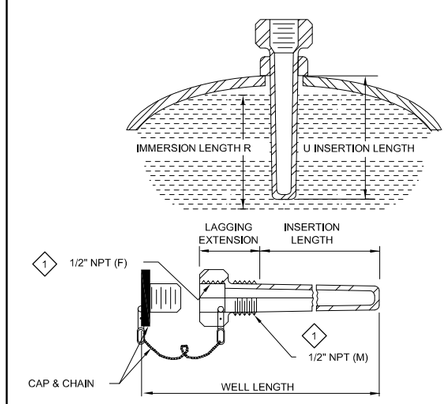

NOTE:

1 SIZE TO MATCH APPLICATION

NT001 TYP — TYPICAL THERMOWELL MOUNTING DETAIL

FILENAME: 8127A10-6232-I008.dwg
LAST UPDATED: 01/31/2012 09:25 AM
LAST SAVED BY: mmorris

No.	DATE	REVISIONS	APPROVED

DESIGNED: MGH
DRAWN: TLF
CHECKED: TAH

RBF CONSULTING

carollo

IRVINE RANCH WATER DISTRICT

JIM MEYERHOFER	RCE NO. 48451	PROJECT MANAGER	DATE
CINDY MILLER	RCE NO. 58116	PROJECT MANAGER	DATE
PATRICIA UEMATSU	RCE NO. 36762	PRINCIPAL ENGINEER	DATE

IRVINE RANCH WATER DISTRICT
BAKER WATER TREATMENT PLANT
PROJECT NO. 11218

INSTRUMENTATION TYPICAL DETAILS - 3

DRAWING I008

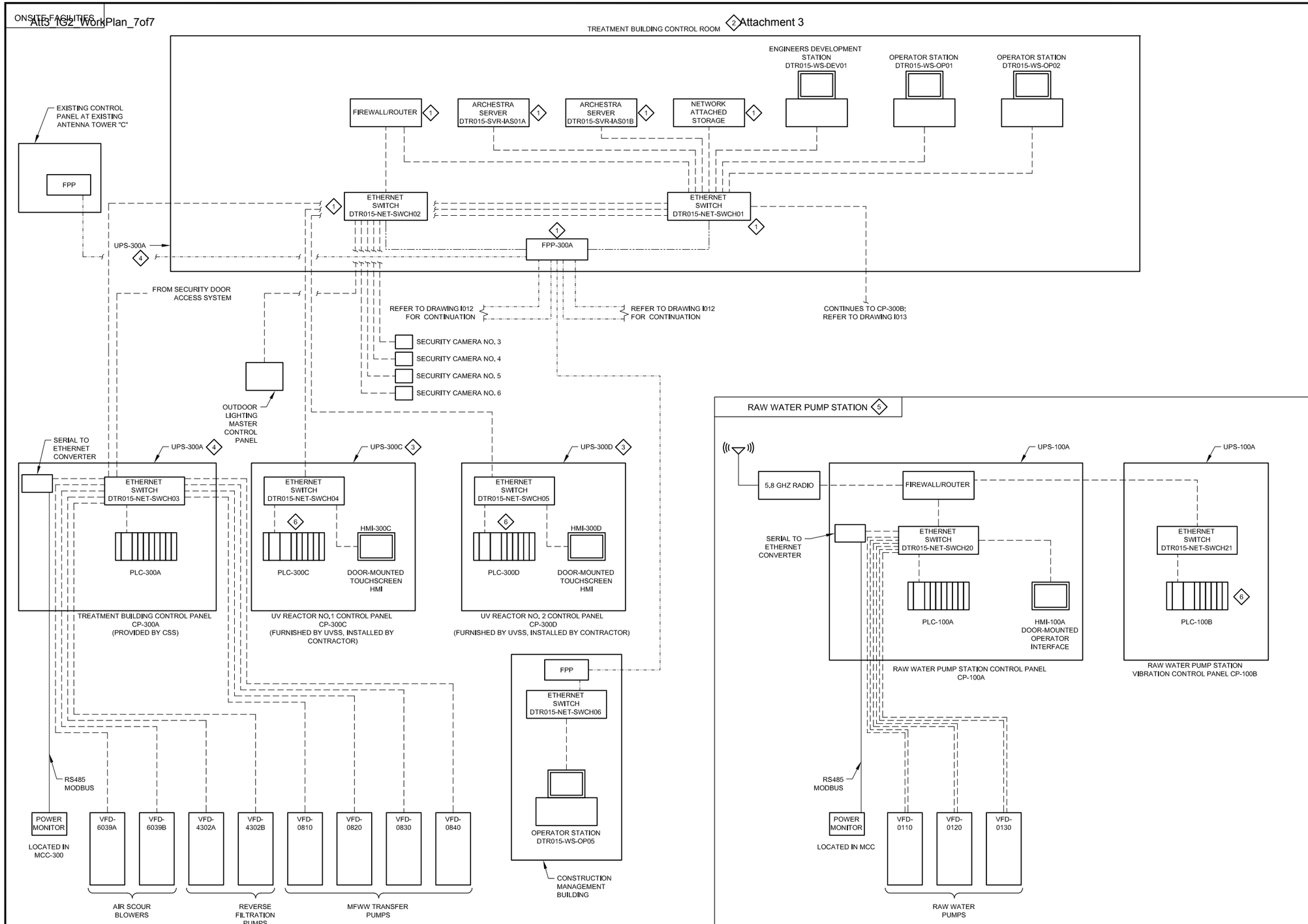

ABBREVIATIONS

SOC WMA

CDSS	CHLORINE DIOXIDE SYSTEM SUPPLIER
CSS	CONTROL SYSTEM SUPPLIER (INTEGRATOR)
MSS	MEMBRANE SYSTEM SUPPLIER
PLC	PROGRAMMABLE LOGIC CONTROLLER
UPS	UNITERRUPTIBLE POWER SUPPLY
UVSS	UV SYSTEM SUPPLIER

GENERAL NOTES:

1. ALL PLC'S SHALL BE MODICON QUANTUM, NO EQUAL, UNLESS OTHERWISE NOTED. PLC PROGRAMMING SOFTWARE SHALL BE THE LATEST VERSION 4.1 OF MODICON UNITY, NO EQUAL.
2. SCADA PROGRAMMING SOFTWARE SHALL BE THE LATEST VERSION 10.1 OF WONDERWARE ARCHESTRA.
3. NETWORK ARCHITECTURE SHALL BE A SELF-HEALING RING.
4. CONFIGURATION SHOWN ON THIS DRAWING REPRESENTS NETWORK TOPOLOGY; REFER TO ELECTRICAL DRAWINGS FOR ADDITIONAL INFORMATION REGARDING EQUIPMENT LOCATION AND NETWORK CABLE ROUTING.
5. ETHERNET CONNECTIONS TO PROCESS EQUIPMENT VFDS ARE FOR MONITORING ONLY. FOR HARD WIRED I/O SIGNALS, SEE P&ID DRAWINGS.
6. ADDITIONAL NETWORK EQUIPMENT SHALL BE PROVIDED AND INSTALLED BY THE OWNER IN NETWORK RACK NO. 1.

KEY NOTES:

1. EQUIPMENT SHALL BE INSTALLED IN A NETWORK RACK LOCATED IN TREATMENT BUILDING ELECTRICAL ROOM.
2. ALL CONTROL ROOM EQUIPMENT SHALL BE PROVIDED BY THE CSS.
3. PANEL MOUNTED UPS FURNISHED BY EQUIPMENT SUPPLIER.
4. CONNECTION FROM UPS PANEL LOCATED IN TREATMENT BUILDING ELECTRICAL ROOM.
5. RAW WATER PUMP STATION CONTROLS ARE SHOWN FOR INFORMATION ONLY. RAW WATER PUMP STATION SHALL NOT BE INCLUDED IN THIS CONTRACT.
6. PLC SHALL BE MODICON M340.

CONNECTIVITY LEGEND

- (2) 6-STRAND FIBER OPTIC CABLES, ETHERNET
- FIBER PATCH CABLES (QUANTITY AS REQUIRED), ETHERNET
- CAT6 CABLE, ETHERNET

FILENAME:8127A10-6232-I011.dwg
LAST UPDATED: 01/31/2012 09:43 AM
LAST SAVED BY: mmorris

No.	DATE	REVISIONS	APPROVED

DESIGNED: MGH
DRAWN: TLF
CHECKED: TAH

RBF CONSULTING
carollo
IRVINE RANCH WATER DISTRICT

JIM MEYERHOFER	RCE NO. 48451	PROJECT MANAGER	DATE
CINDY MILLER	RCE NO. 58116	PROJECT MANAGER	DATE
PATRICIA UEMATSU	RCE NO. 36762	PRINCIPAL ENGINEER	DATE

IRVINE RANCH WATER DISTRICT
BAKER WATER TREATMENT PLANT
PROJECT NO. 11218

INSTRUMENTATION
SCADA BLOCK DIAGRAM–1

DRAWING I011
SHEET 555 OF 632

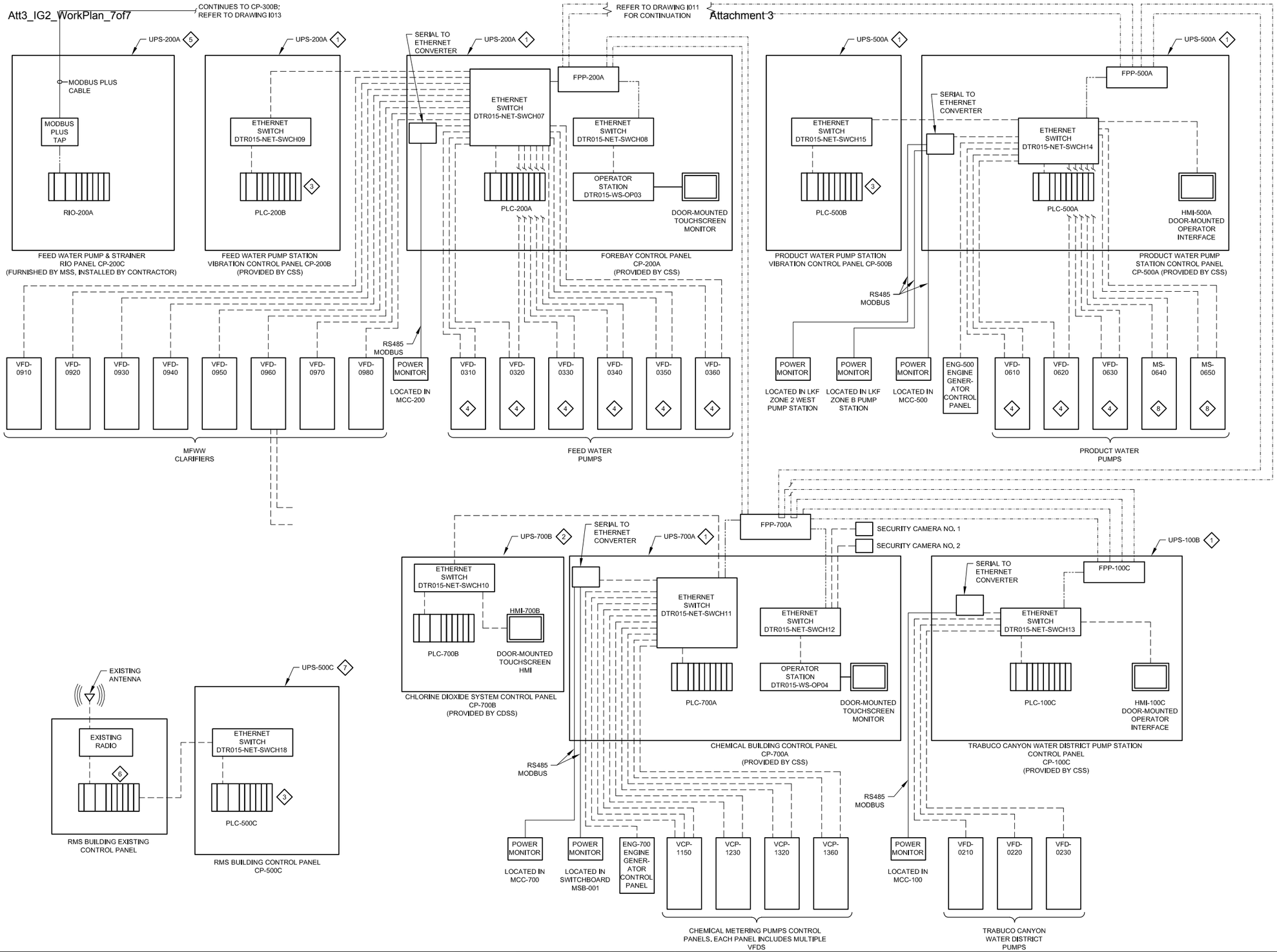

ABBREVIATIONS

SOC WMA

CDSS	CHLORINE DIOXIDE SYSTEM SUPPLIER
CSS	CONTROL SYSTEM SUPPLIER (INTEGRATOR)
MSS	MEMBRANE SYSTEM SUPPLIER
PLC	PROGRAMMABLE LOGIC CONTROLLER
UPS	UNITERRUPTIBLE POWER SUPPLY
UVSS	UV SYSTEM SUPPLIER

GENERAL NOTES:

1. ALL PLC'S SHALL BE MODICON QUANTUM, NO EQUAL, UNLESS OTHERWISE NOTED. PLC PROGRAMMING SOFTWARE SHALL BE VERSION 4.1 OF MODICON UNITY, NO EQUAL.
2. SCADA PROGRAMMING SOFTWARE SHALL BE VERSION 10.1 OF WONDERWARE ARCHESTRA.
3. NETWORK ARCHITECTURE SHALL BE A SELF-HEALING RING.
4. CONFIGURATION SHOWN ON THIS DRAWING REPRESENTS NETWORK TOPOLOGY; REFER TO ELECTRICAL DRAWINGS FOR ADDITIONAL INFORMATION REGARDING EQUIPMENT LOCATION AND NETWORK CABLE ROUTING.
5. ETHERNET CONNECTIONS TO PROCESS EQUIPMENT VFDS ARE FOR MONITORING ONLY. FOR HARD-WIRED I/O SIGNALS, SEE P&ID DRAWINGS.

KEY NOTES:

1. PROVIDE FREE-STANDING UPS DEDICATED TO SUPPLYING POWER TO CONTROL PANEL LOADS AND FIELD INSTRUMENTS.
2. FREE-STANDING UPS FURNISHED BY EQUIPMENT SUPPLIER, INSTALLED BY CONTRACTOR.
3. PLC SHALL BE MODICON M340.
4. PROVIDE ETHERNET CONNECTION FROM VFD AND MOTOR PROTECTION RELAY IN VFD ENCLOSURE.
5. FOR UPS-200A, CONTRACTOR SHALL PROVIDE SUFFICIENT CAPACITY AND BATTERY STORAGE TO PROVIDE UPS POWER TO PANEL CP-200C.
6. EXISTING PLC IN EXISTING CONTROL PANEL.
7. PROVIDE PANEL-MOUNTED UPS IN CP-500C, SIZED TO PROVIDE POWER FOR COMPONENTS OF CP-500C AND EXISTING RMS BUILDING PLC PANEL.
8. PROVIDE ETHERNET CONNECTION FROM SOLID-STATE STARTER AND MOTOR PROTECTION RELAY IN STARTER ENCLOSURE.

CONNECTIVITY LEGEND

- (2) 6-STRAND FIBER OPTIC CABLES, ETHERNET
- FIBER PATCH CABLES (QUANTITY AS REQUIRED), ETHERNET
- CAT6 CABLE, ETHERNET

FILENAME: 8127A10-6232-I012.dwg
LAST UPDATED: 01/31/2012 10:57 AM
LAST SAVED BY: mmorris

No.	DATE	REVISIONS	APPROVED

DESIGNED: MGH
DRAWN: TLF
CHECKED: TAH

RBF CONSULTING
carollo
IRVINE RANCH WATER DISTRICT

JIM MEYERHOFER	RCE NO. 48451	PROJECT MANAGER	DATE
CINDY MILLER	RCE NO. 58116	PROJECT MANAGER	DATE
PATRICIA UEMATSU	RCE NO. 36762	PRINCIPAL ENGINEER	DATE

IRVINE RANCH WATER DISTRICT
BAKER WATER TREATMENT PLANT
PROJECT NO. 11218

INSTRUMENTATION
SCADA BLOCK DIAGRAM–2

DRAWING I012

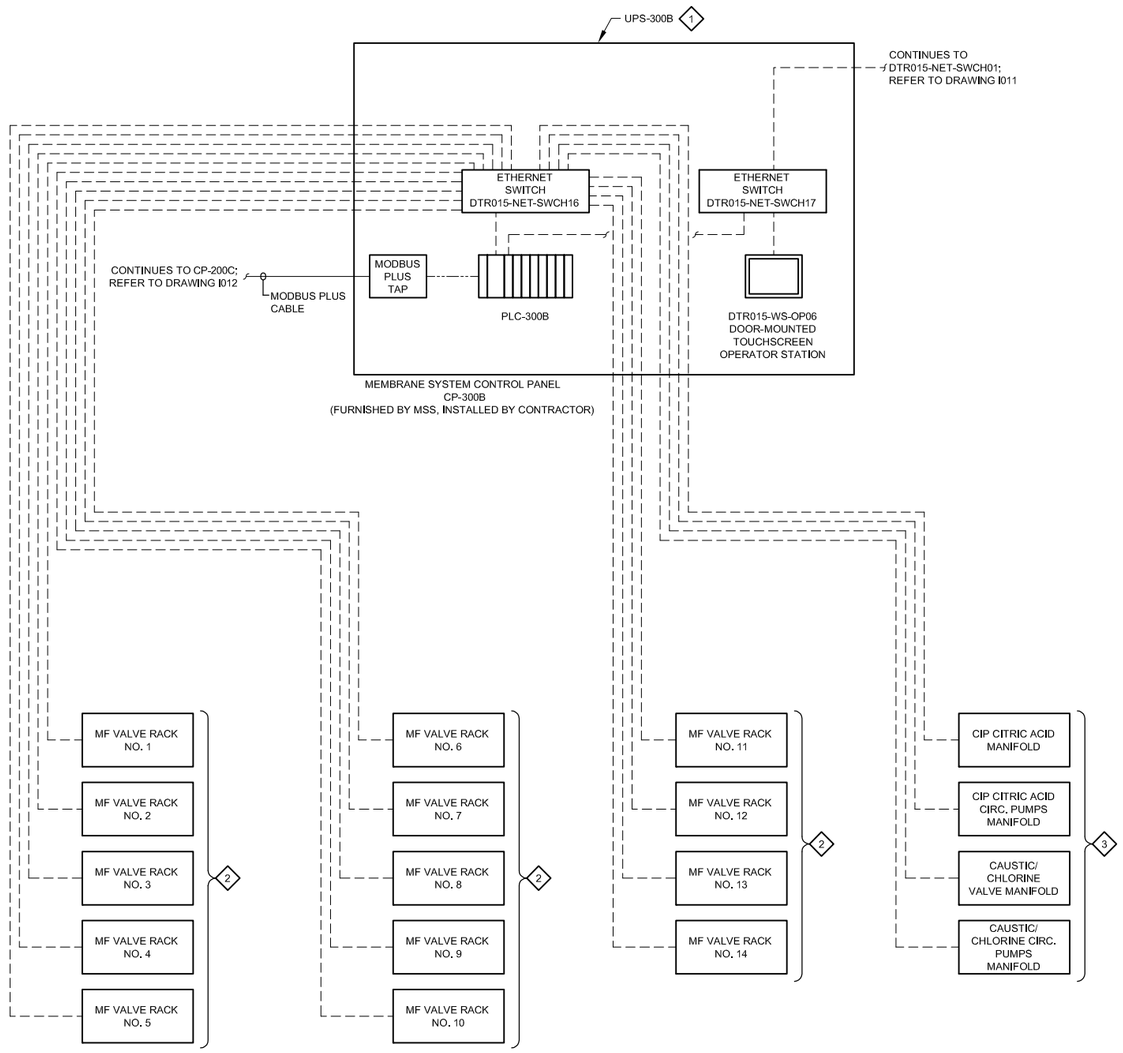

ABBREVIATIONS

SOC WMA

CDSS	CHLORINE DIOXIDE SYSTEM SUPPLIER
CSS	CONTROL SYSTEM SUPPLIER (INTEGRATOR)
MSS	MEMBRANE SYSTEM SUPPLIER
PLC	PROGRAMMABLE LOGIC CONTROLLER
UPS	UNITERRUPTIBLE POWER SUPPLY
UVSS	UV SYSTEM SUPPLIER

GENERAL NOTES:

1. ALL PLC'S SHALL BE MODICON QUANTUM, NO EQUAL, UNLESS OTHERWISE NOTED. PLC PROGRAMMING SOFTWARE SHALL BE VERSION 4.1 OF MODICON UNITY, NO EQUAL.
2. SCADA PROGRAMMING SOFTWARE SHALL BE VERSION 10.1 OF WONDERWARE ARCHESTRA.
3. NETWORK ARCHITECTURE SHALL BE A SELF-HEALING RING.
4. CONFIGURATION SHOWN ON THIS DRAWING REPRESENTS NETWORK TOPOLOGY; REFER TO ELECTRICAL DRAWINGS FOR ADDITIONAL INFORMATION REGARDING EQUIPMENT LOCATION AND NETWORK CABLE ROUTING.

KEY NOTES:

1. FREE-STANDING UPS FURNISHED BY EQUIPMENT SUPPLIER, INSTALLED BY CONTRACTOR.
2. SOLENOID VALVE MANIFOLDS FURNISHED BY MSS, INSTALLED BY MSS.
3. SOLENOID VALVE MANIFOLDS FURNISHED BY MSS, INSTALLED BY CONTRACTOR.

CONNECTIVITY LEGEND

- (2) 6-STRAND FIBER OPTIC CABLES, ETHERNET
- FIBER PATCH CABLES (QUANTITY AS REQUIRED), ETHERNET
- CAT6 CABLE, ETHERNET

FILENAME:8127A10-6232-I013.dwg
LAST UPDATED: 11/10/2011 03:31 PM
LAST SAVED BY: mmorris

No.	DATE	REVISIONS	APPROVED

DESIGNED: MGH
DRAWN: TLF
CHECKED: TAH

RBF CONSULTING

carollo

IRVINE RANCH WATER DISTRICT

JIM MEYERHOFER	RCE NO. 48451	PROJECT MANAGER	DATE
CINDY MILLER	RCE NO. 58116	PROJECT MANAGER	DATE
PATRICIA UEMATSU	RCE NO. 36762	PRINCIPAL ENGINEER	DATE

IRVINE RANCH WATER DISTRICT
BAKER WATER TREATMENT PLANT
PROJECT NO. 11218

INSTRUMENTATION
SCADA BLOCK DIAGRAM–3

DRAWING I013

SHEET 557 OF 632

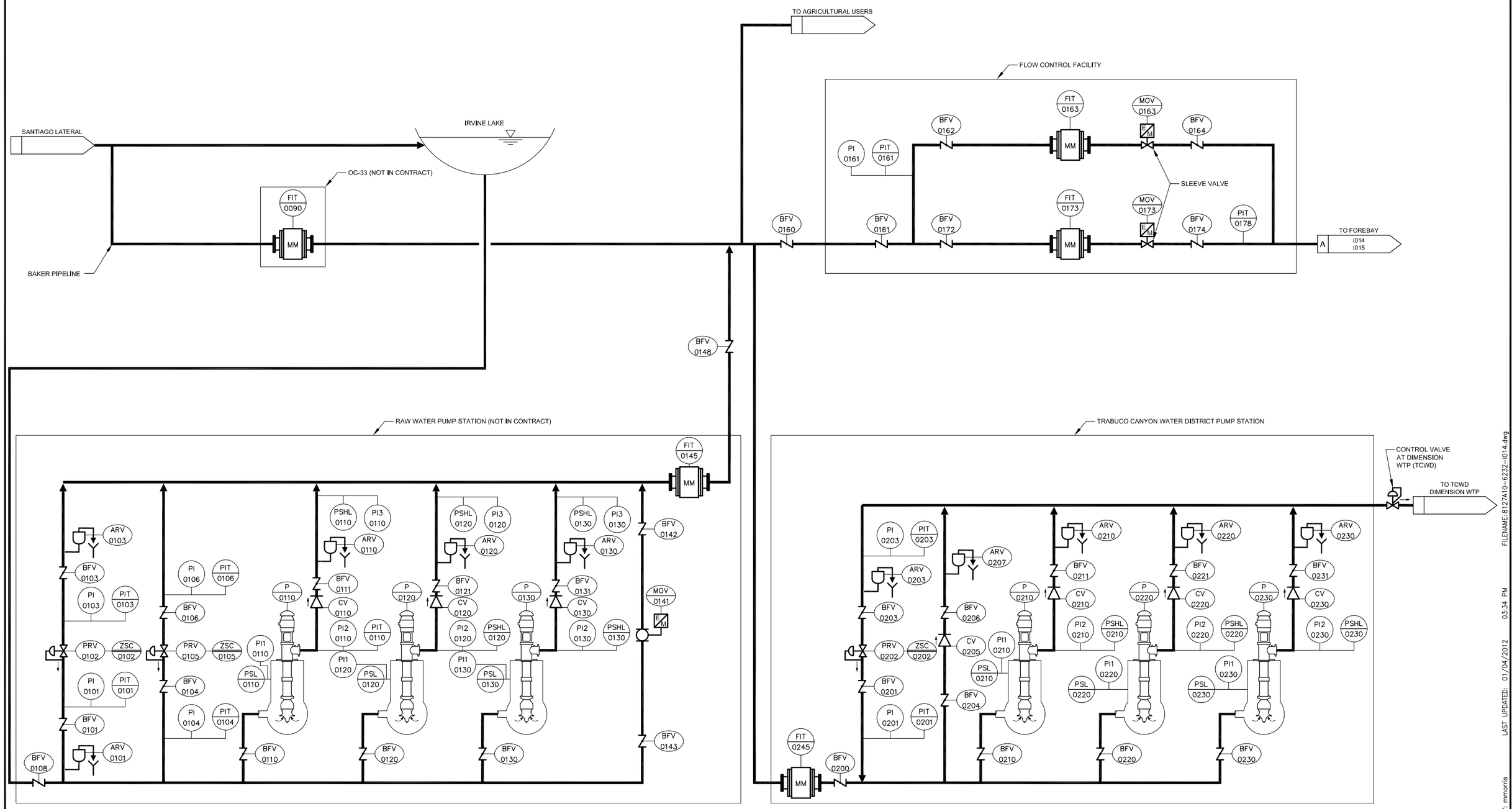

FILENAME: 8127A10-6232-I014.dwg
LAST UPDATED: 01/04/2012 03:34 PM
LAST SAVED BY: mmorris

No.	DATE	REVISIONS	APPROVED

DESIGNED: MGH
DRAWN: TLF
CHECKED: TAH

RBF CONSULTING

carollo

IRVINE RANCH WATER DISTRICT

JIM MEYERHOFER	RCE NO. 48451	PROJECT MANAGER	DATE
CINDY MILLER	RCE NO. 58116	PROJECT MANAGER	DATE
PATRICIA UEMATSU	RCE NO. 36762	PRINCIPAL ENGINEER	DATE

IRVINE RANCH WATER DISTRICT
BAKER WATER TREATMENT PLANT
PROJECT NO. 11218

RAW WATER FLOW SCHEMATIC

DRAWING I014

SHEET 558 OF 632

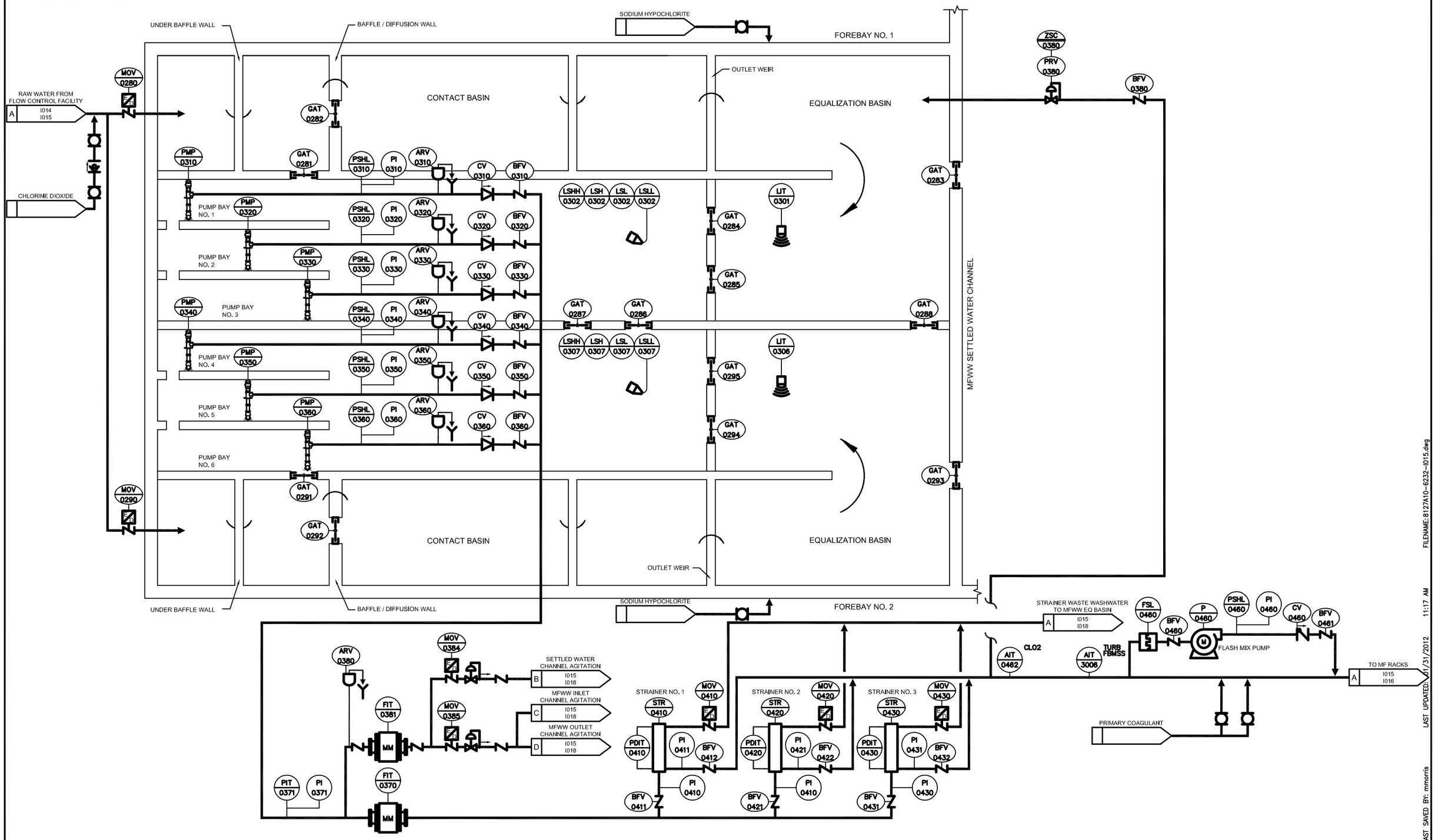

FILENAME: 8127A10-6232-I015.dwg
LAST UPDATED: 01/31/2012 11:17 AM
LAST SAVED BY: mmorris

No.	DATE	REVISIONS	APPROVED

DESIGNED: MGH
DRAWN: TLF
CHECKED: TAH

RBF CONSULTING
carollo
IRVINE RANCH WATER DISTRICT

JIM MEYERHOFER	RCE NO. 48451	PROJECT MANAGER	DATE
CINDY MILLER	RCE NO. 58118	PROJECT MANAGER	DATE
PATRICIA UEMATSU	RCE NO. 38762	PRINCIPAL ENGINEER	DATE

IRVINE RANCH WATER DISTRICT
BAKER WATER TREATMENT PLANT
PROJECT NO. 11218

FOREBAY FLOW SCHEMATIC

DRAWING I015

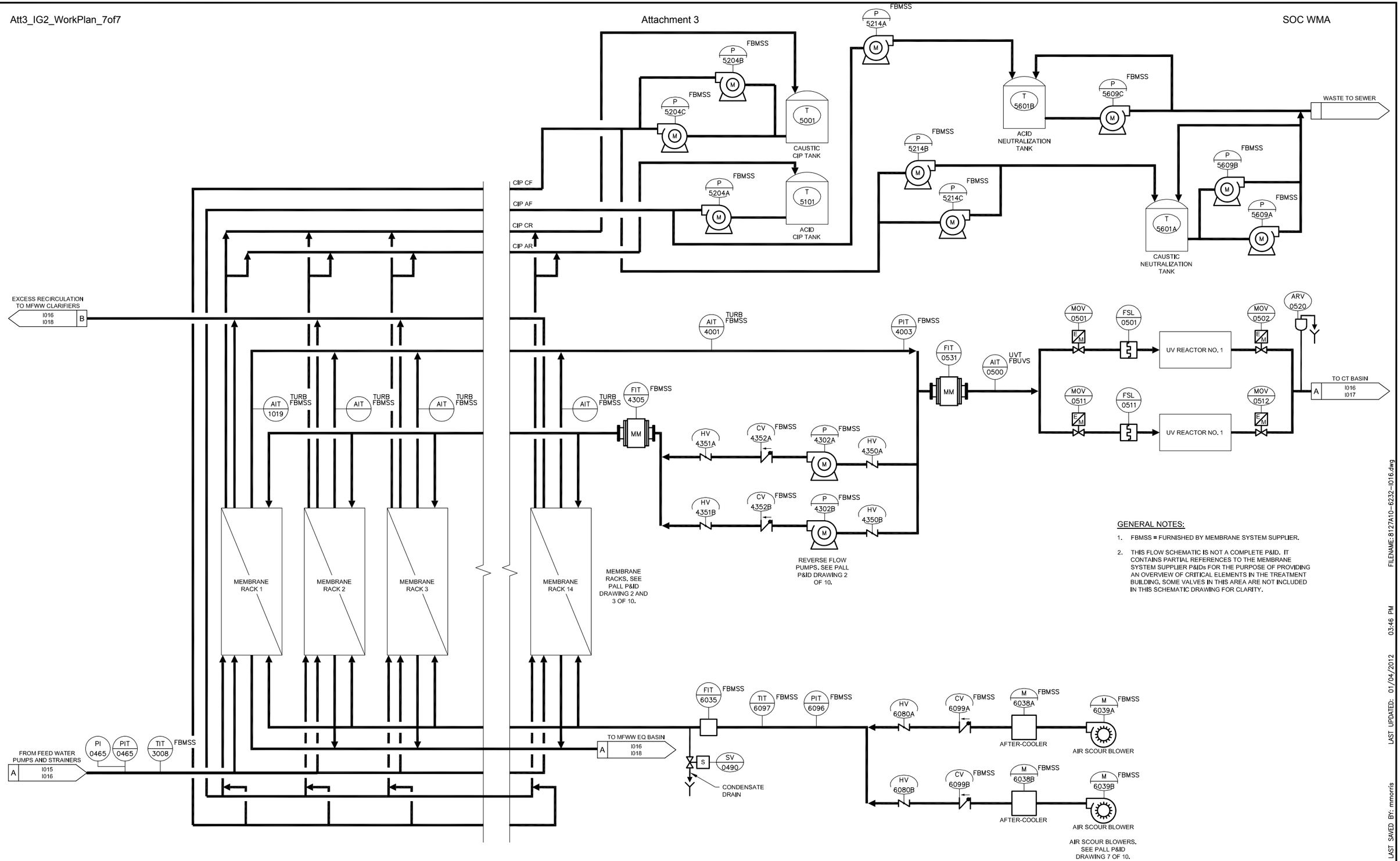

GENERAL NOTES:

1. FBMSS = FURNISHED BY MEMBRANE SYSTEM SUPPLIER.
2. THIS FLOW SCHEMATIC IS NOT A COMPLETE P&ID. IT CONTAINS PARTIAL REFERENCES TO THE MEMBRANE SYSTEM SUPPLIER P&IDs FOR THE PURPOSE OF PROVIDING AN OVERVIEW OF CRITICAL ELEMENTS IN THE TREATMENT BUILDING. SOME VALVES IN THIS AREA ARE NOT INCLUDED IN THIS SCHEMATIC DRAWING FOR CLARITY.

FILENAME: 8127A10-6232-I016.dwg

LAST UPDATED: 01/04/2012 03:46 PM

LAST SAVED BY: mmorris

No.	DATE	REVISIONS	APPROVED

DESIGNED: MGH
DRAWN: TLF
CHECKED: TAH

RBF CONSULTING

carollo

IRVINE RANCH WATER DISTRICT

JIM MEYERHOFER	RCE NO. 48451	PROJECT MANAGER	DATE
CINDY MILLER	RCE NO. 58116	PROJECT MANAGER	DATE
PATRICIA UEMATSU	RCE NO. 36762	PRINCIPAL ENGINEER	DATE

IRVINE RANCH WATER DISTRICT
BAKER WATER TREATMENT PLANT
PROJECT NO. 11218

TREATMENT BUILDING FLOW SCHEMATIC

DRAWING I016

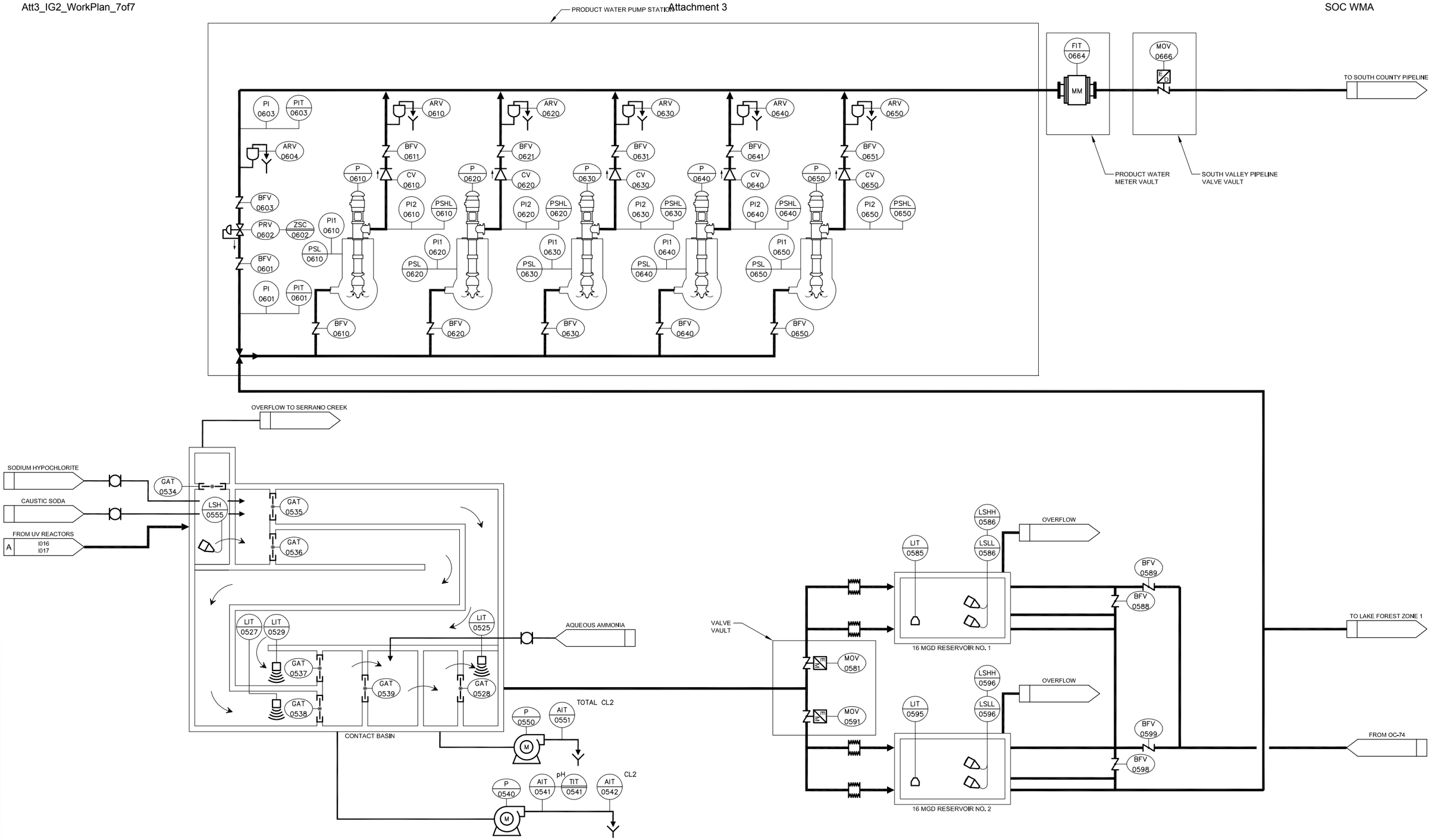

No.	DATE	REVISIONS	APPROVED

DESIGNED: MGH
DRAWN: TLF
CHECKED: TAH

RBF CONSULTING

carollo

IRVINE RANCH WATER DISTRICT

JIM MEYERHOFER	RCE NO. 48451	PROJECT MANAGER	DATE
CINDY MILLER	RCE NO. 58116	PROJECT MANAGER	DATE
PATRICIA UEMATSU	RCE NO. 36762	PRINCIPAL ENGINEER	DATE

IRVINE RANCH WATER DISTRICT
BAKER WATER TREATMENT PLANT
PROJECT NO. 11218

TREATED WATER FLOW SCHEMATIC

DRAWING I017

SHEET 561 OF 632

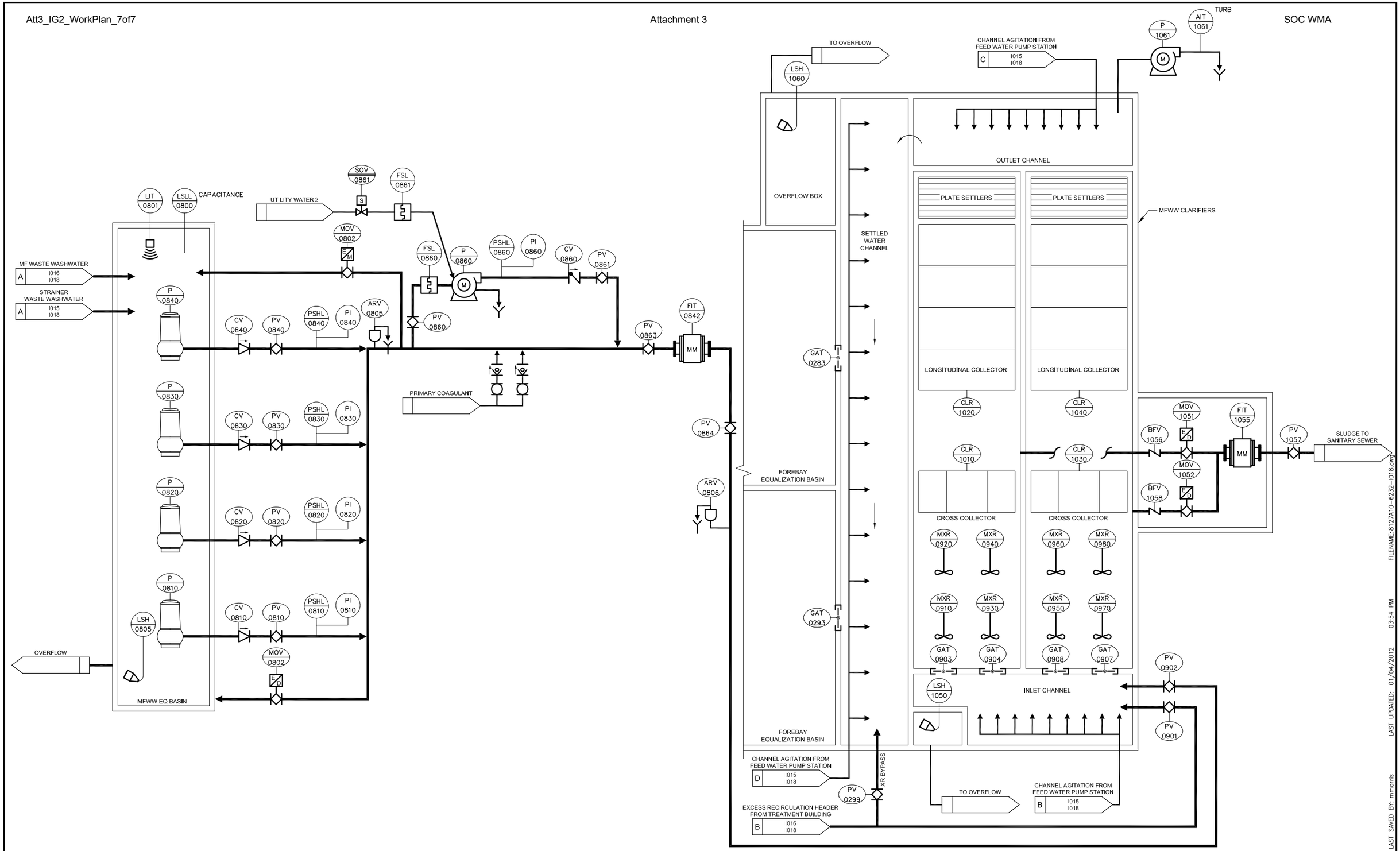

No.	DATE	REVISIONS	APPROVED

DESIGNED: MGH
DRAWN: TLF
CHECKED: TAH

RBF CONSULTING

carollo

IRVINE RANCH WATER DISTRICT

JIM MEYERHOFER	RCE NO. 48451	PROJECT MANAGER	DATE
CINDY MILLER	RCE NO. 58116	PROJECT MANAGER	DATE
PATRICIA UEMATSU	RCE NO. 36762	PRINCIPAL ENGINEER	DATE

IRVINE RANCH WATER DISTRICT
BAKER WATER TREATMENT PLANT
PROJECT NO. 11218

MFWW FLOW SCHEMATICS

DRAWING I018

SHEET 562 OF 632

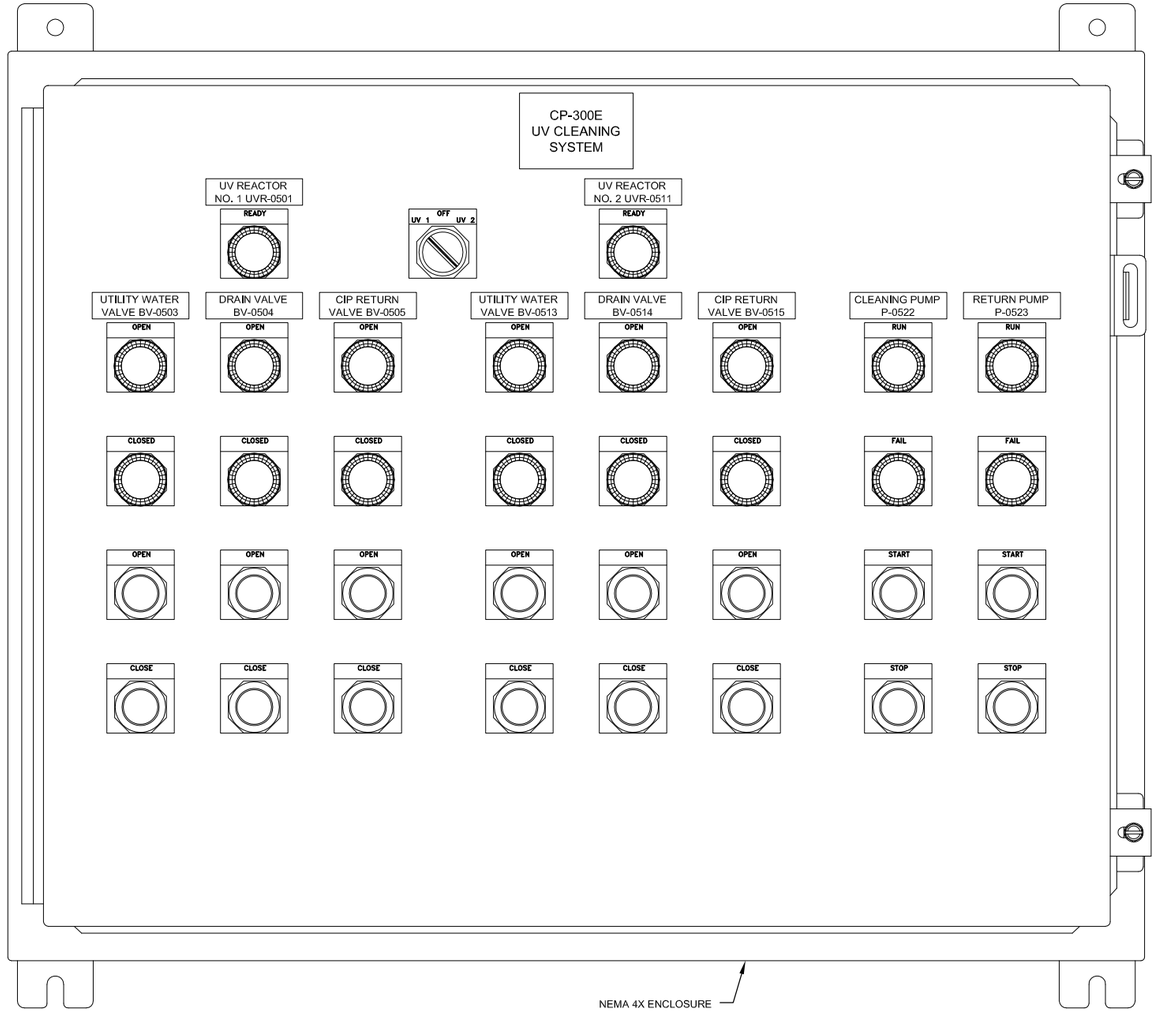

1 LOCAL CONTROL PANEL CP-300E ELEVATION

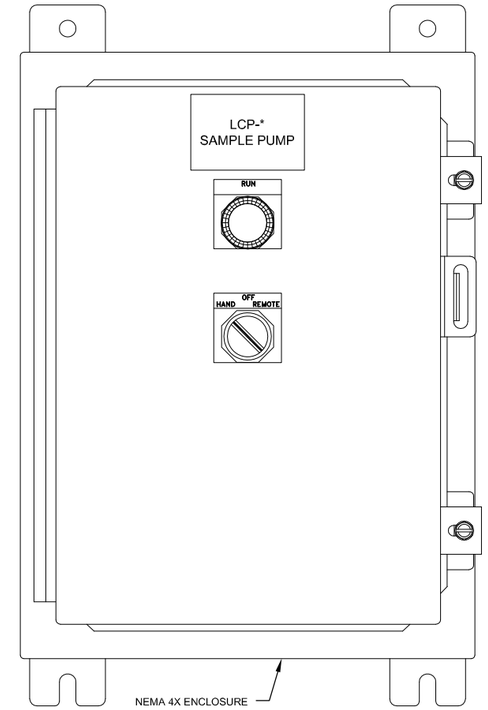

LCP-* ⟷ 0540 ⟷ P-0540
LCP-* ⟷ 0550 ⟷ P-0550
LCP-* ⟷ 1061 ⟷ P-1061

2 SAMPLE PUMP LOCAL CONTROL PANEL ELEVATION

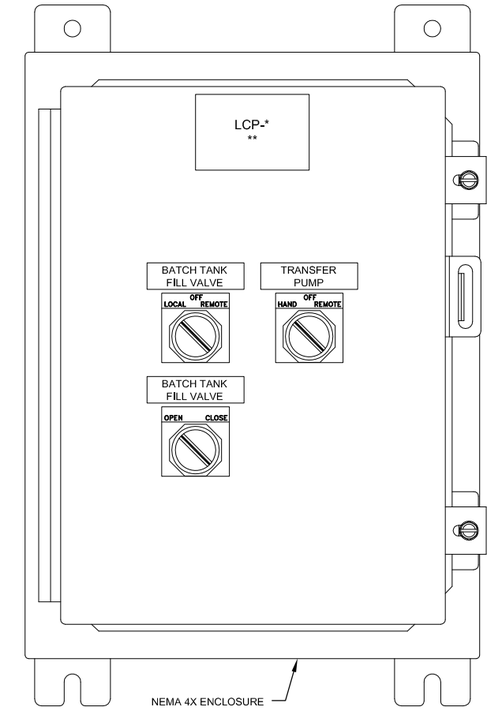

LCP-* ⟷ 1210 ⟷ ** ⟷ SODIUM HYPOCHLORITE
LCP-* ⟷ 1280 ⟷ ** ⟷ CAUSTIC SODA
LCP-* ⟷ 1400 ⟷ ** ⟷ CITRIC ACID
LCP-* ⟷ 1460 ⟷ ** ⟷ SODIUM BISULFITE

3 CHEMICAL TRANSFER SYSTEM LOCAL CONTROL PANEL ELEVATION

LAST SAVED BY: mmorris LAST UPDATED: 01/04/2012 03:56 PM FILENAME:8127A10-6232-I019.dwg

No.	DATE	REVISIONS	APPROVED

DESIGNED: MGH
DRAWN: SMW
CHECKED: TAH

RBF CONSULTING

carollo

IRVINE RANCH WATER DISTRICT

JIM MEYERHOFER	RCE NO. 48451	PROJECT MANAGER	DATE
CINDY MILLER	RCE NO. 58116	PROJECT MANAGER	DATE
PATRICIA UEMATSU	RCE NO. 36762	PRINCIPAL ENGINEER	DATE

IRVINE RANCH WATER DISTRICT
BAKER WATER TREATMENT PLANT
PROJECT NO. 11218

INSTRUMENTATION
LOCAL CONTROL PANELS

DRAWING
I019

KEY NOTES:

1. 1/2" HDPE BOARD.
2. USE APPROVED STRUCTURAL MEMBERS, MOUNTING HARDWARE, AND ANCHORAGE.

SOC WMA

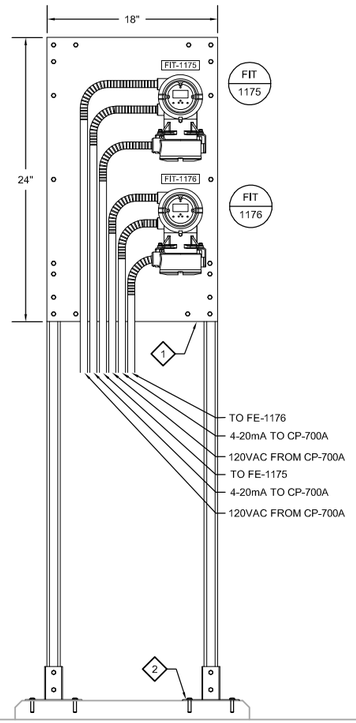

1 PRIMARY COAGULANT INSTRUMENT MOUNTING PANEL ELEVATION
SCALE: 1-1/2"=1'-0"

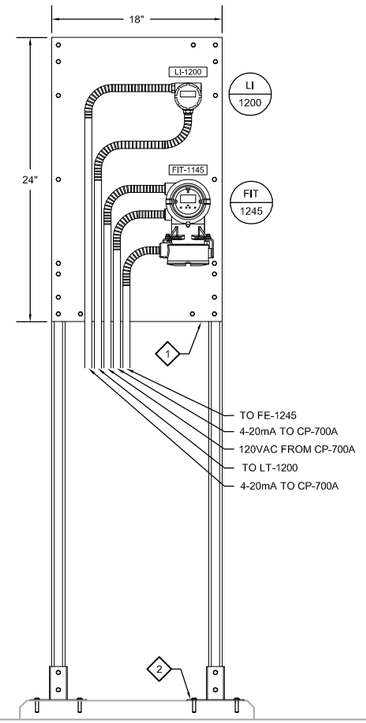

2 SODIUM HYPOCHLORITE INSTRUMENT MOUNTING PANEL ELEVATION
SCALE: 1-1/2"=1'-0"

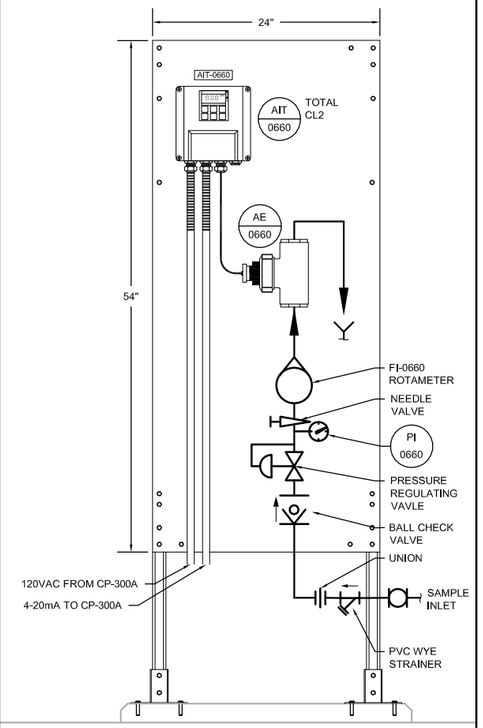

3 TOTAL CHLORINE ANALYZER
SCALE: 1-1/2"=1'-0"

FILENAME: 8127A10-6232-I020.dwg
LAST UPDATED: 01/03/2012 02:19 PM
LAST SAVED BY: mmorris

No.	DATE	REVISIONS	APPROVED

DESIGNED: MGH
DRAWN: DKI
CHECKED: TAH

RBF CONSULTING

carollo

IRVINE RANCH WATER DISTRICT

JIM MEYERHOFER	RCE NO. 48451	PROJECT MANAGER	DATE
CINDY MILLER	RCE NO. 58116	PROJECT MANAGER	DATE
PATRICIA UEMATSU	RCE NO. 36762	PRINCIPAL ENGINEER	DATE

IRVINE RANCH WATER DISTRICT
BAKER WATER TREATMENT PLANT
PROJECT NO. 11218

INSTRUMENTATION
INSTRUMENT MOUNTING
PANELS – 1

DRAWING
I020

SHEET
564 OF 632

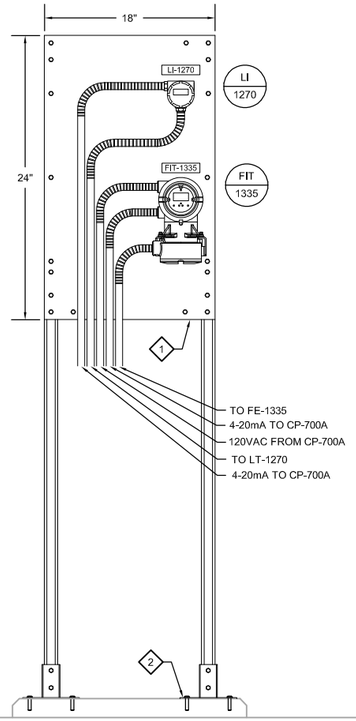

1 CAUSTIC SODA INSTRUMENT MOUNTING PANEL ELEVATION
SCALE: 1-1/2"=1'-0"

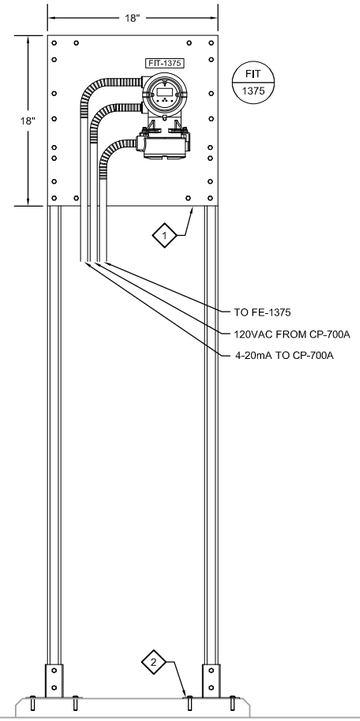

2 AQUEOUS AMMONIA INSTRUMENT MOUNTING PANEL ELEVATION
SCALE: 1-1/2"=1'-0"

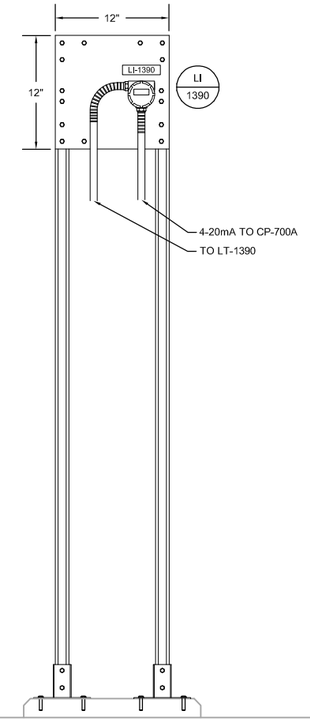

3 CITRIC ACID INSTRUMENT MOUNTING PANEL ELEVATION
SCALE: 1-1/2"=1'-0"

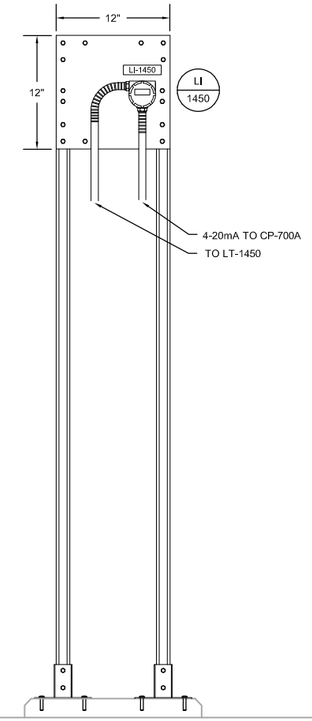

4 SODIUM BISULFITE INSTRUMENT MOUNTING PANEL ELEVATION
SCALE: 1-1/2"=1'-0"

KEY NOTES:

1. 1/2" HDPE BOARD.
2. USE APPROVED STRUCTURAL MEMBERS, MOUNTING HARDWARE, AND ANCHORAGE.

SOC WMA

No.	DATE	REVISIONS	APPROVED

DESIGNED: MGH
DRAWN: DKI
CHECKED: TAH

RBF CONSULTING

carollo

IRVINE RANCH WATER DISTRICT

JIM MEYERHOFER	RCE NO. 48451	PROJECT MANAGER	DATE
CINDY MILLER	RCE NO. 58116	PROJECT MANAGER	DATE
PATRICIA UEMATSU	RCE NO. 36762	PRINCIPAL ENGINEER	DATE

IRVINE RANCH WATER DISTRICT
BAKER WATER TREATMENT PLANT
PROJECT NO. 11218

INSTRUMENTATION
INSTRUMENT MOUNTING
PANELS – 2

DRAWING I021

FILENAME: 8127A10-6232-I021.dwg
LAST UPDATED: 11/11/2011 08:25 AM
LAST SAVED BY: mmorris

KEY NOTES:

1. 1/2" HDPE BOARD
2. WALL MOUNTED PANEL
3. FURNISHED BY MEMBRANE SYSTEM SUPPLIER. REFER TO PALL P&ID DRAWINGS AND INSTRUMENTATION SUBMITTAL FOR MORE INFORMATION.

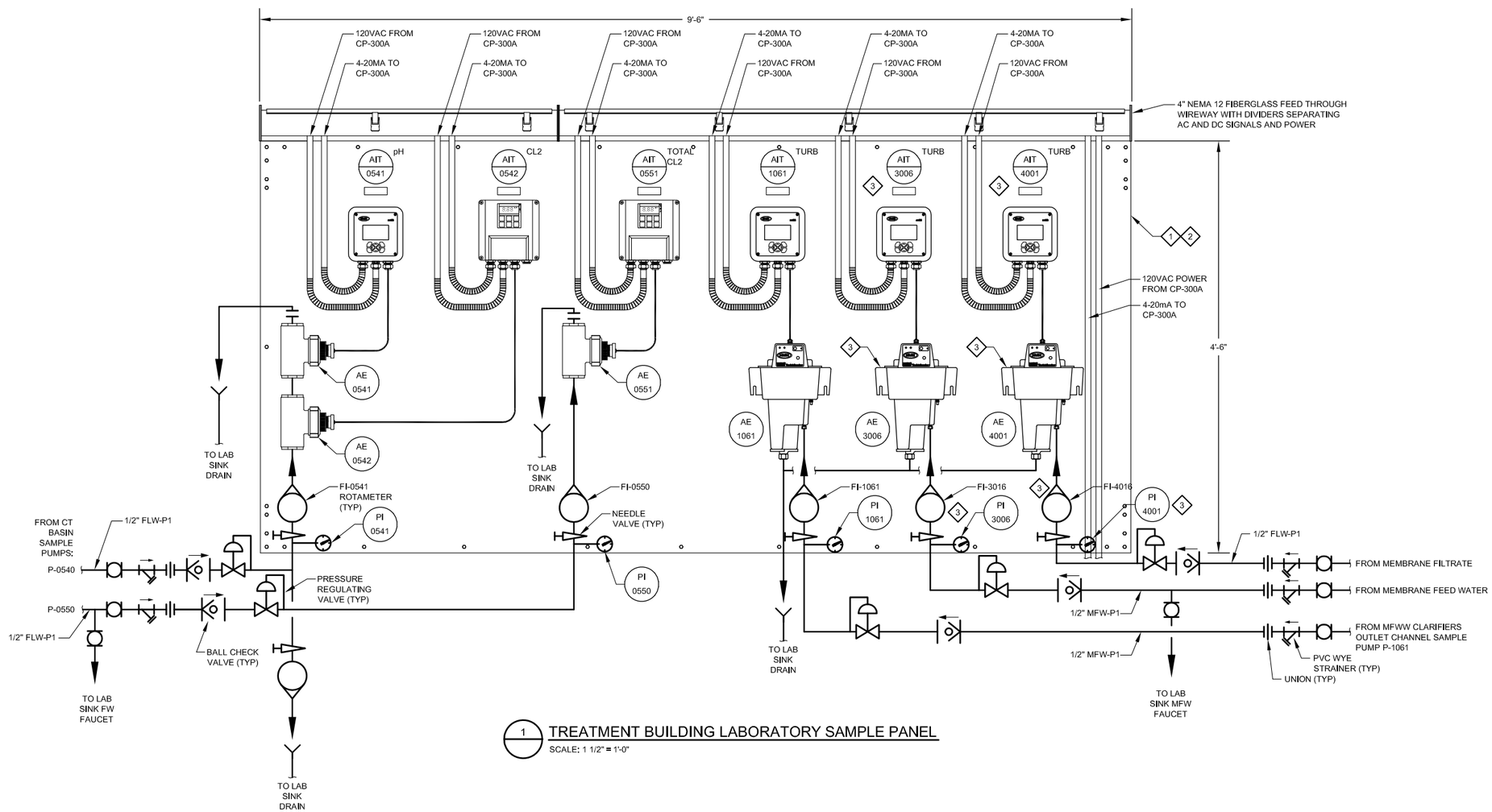

1 TREATMENT BUILDING LABORATORY SAMPLE PANEL

SCALE: 1 1/2" = 1'-0"

FILENAME: 8127A10-6232-1022.dwg

LAST UPDATED: 01/03/2012 02:46 PM

LAST SAVED BY: mmorris

No.	DATE	REVISIONS	APPROVED

DESIGNED: MGH

DRAWN: DKI

CHECKED: TAH

RBF CONSULTING

carollo

IRVINE RANCH WATER DISTRICT

JIM MEYERHOFER	RCE NO. 48451	PROJECT MANAGER	DATE
CINDY MILLER	RCE NO. 58116	PROJECT MANAGER	DATE
PATRICIA UEMATSU	RCE NO. 36762	PRINCIPAL ENGINEER	DATE

IRVINE RANCH WATER DISTRICT
BAKER WATER TREATMENT PLANT
PROJECT NO. 11218

INSTRUMENTATION
INSTRUMENT MOUNTING PANELS - 3

DRAWING 1022

SHEET 566 OF 632

KEY NOTES:

1. 1/2" HDPE BOARD
2. 2 INCH PVC SAMPLE DRAIN. ROUTE TO NEAREST PROCESS DRAIN.
3. FURNISHED BY UV SYSTEM SUPPLIER.

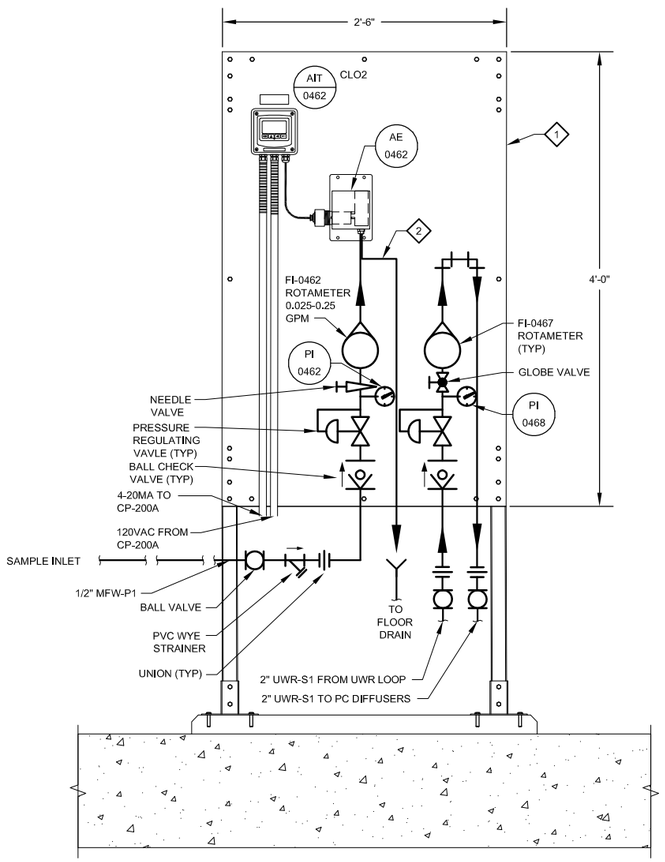

1 CHLORINE DIOXIDE RESIDUAL ANALYZER

SCALE: 1 1/2" = 1'-0"

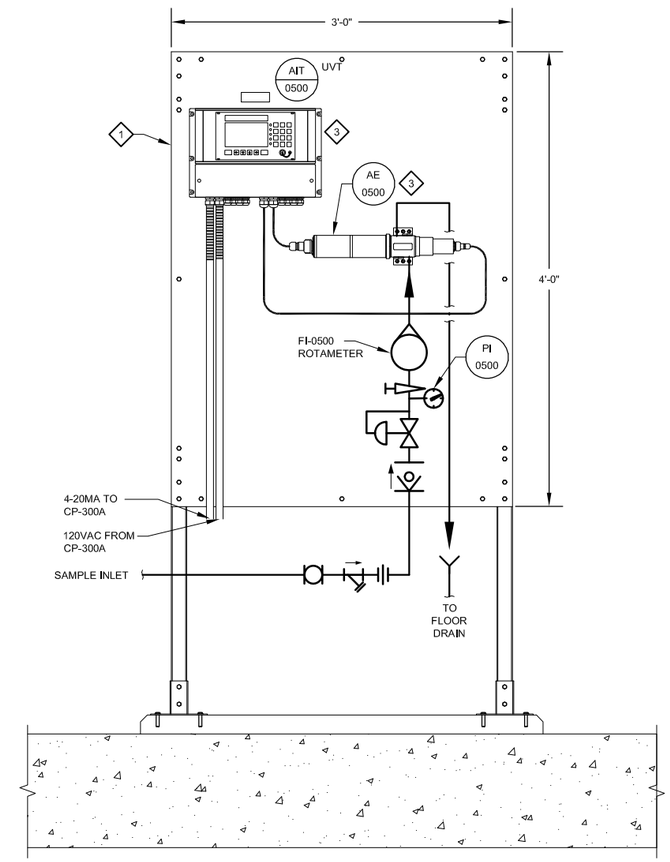

2 UV TRANSMITTANCE SENSOR

SCALE: 1 1/2" = 1'-0"

FILENAME: 8127A10-6232-1023.dwg

LAST UPDATED: 01/03/2012 02:51 PM

LAST SAVED BY: mmorris

No.	DATE	REVISIONS	APPROVED

DESIGNED: MGH

DRAWN: DKI

CHECKED: TAH

RBF CONSULTING

carollo

IRVINE RANCH WATER DISTRICT

JIM MEYERHOFER	RCE NO. 48451	PROJECT MANAGER	DATE
CINDY MILLER	RCE NO. 58116	PROJECT MANAGER	DATE
PATRICIA UEMATSU	RCE NO. 36762	PRINCIPAL ENGINEER	DATE

IRVINE RANCH WATER DISTRICT
BAKER WATER TREATMENT PLANT
PROJECT NO. 11218

INSTRUMENTATION
INSTRUMENT MOUNTING
PANELS - 4

DRAWING 1023

SHEET 567 OF 632

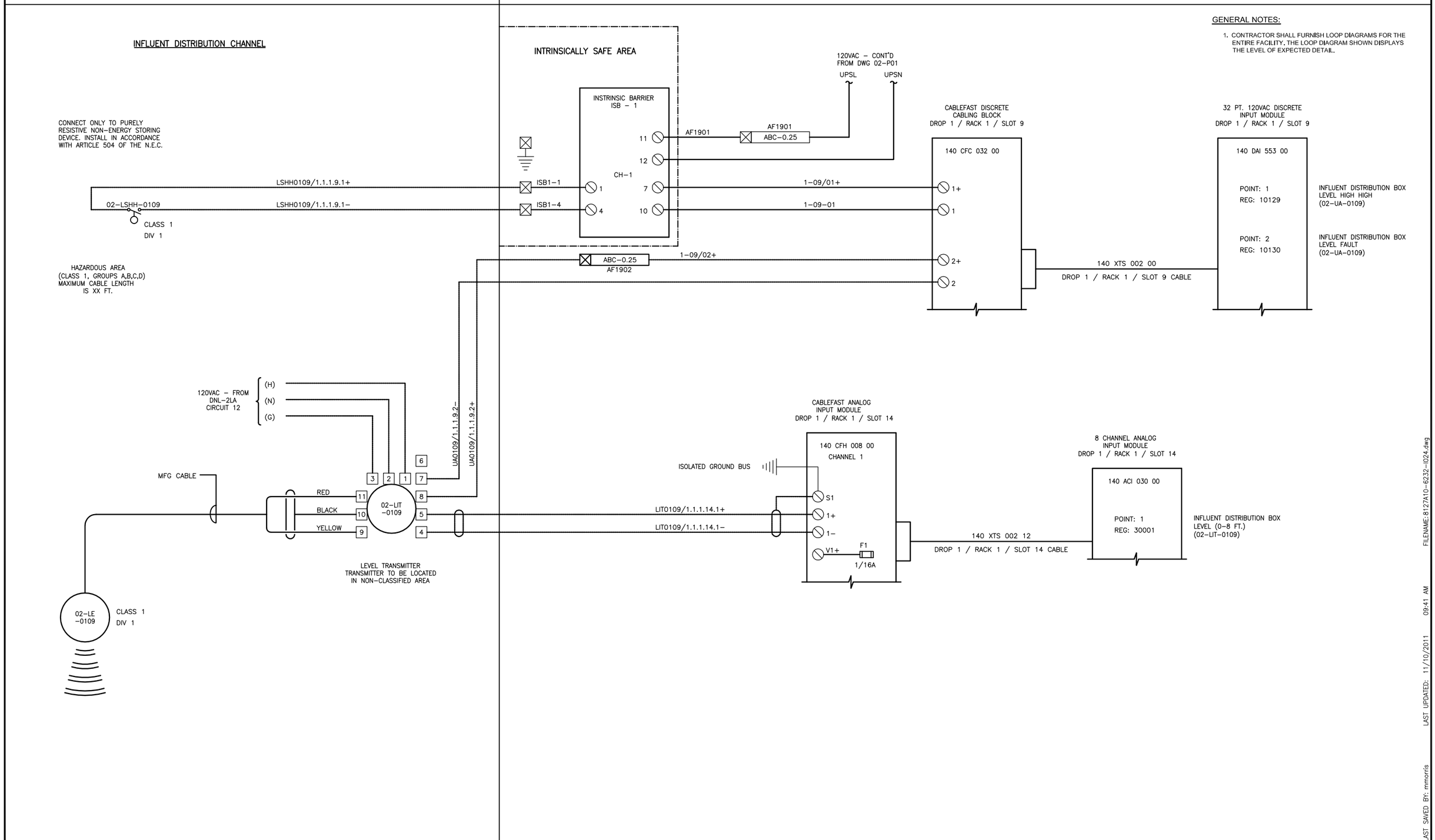

LAST SAVED BY: mmorris LAST UPDATED: 11/10/2011 09:41 AM FILENAME:8127A10–6232–I024.dwg

No.	DATE	REVISIONS	APPROVED

DESIGNED: MGH
DRAWN: SMW
CHECKED: TAH

RBF CONSULTING
carollo
IRVINE RANCH WATER DISTRICT

JIM MEYERHOFER	RCE NO. 48451	PROJECT MANAGER	DATE
CINDY MILLER	RCE NO. 58116	PROJECT MANAGER	DATE
PATRICIA UEMATSU	RCE NO. 36762	PRINCIPAL ENGINEER	DATE

IRVINE RANCH WATER DISTRICT
BAKER WATER TREATMENT PLANT
PROJECT NO. 11218

INSTRUMENTATION
EXAMPLE LOOP WIRING DIAGRAM–1

DRAWING I024

GENERAL NOTES:

1. CONTRACTOR SHALL FURNISH LOOP DIAGRAMS FOR THE ENTIRE FACILITY. THE LOOP DIAGRAM SHOWN DISPLAYS THE LEVEL OF EXPECTED DETAIL.

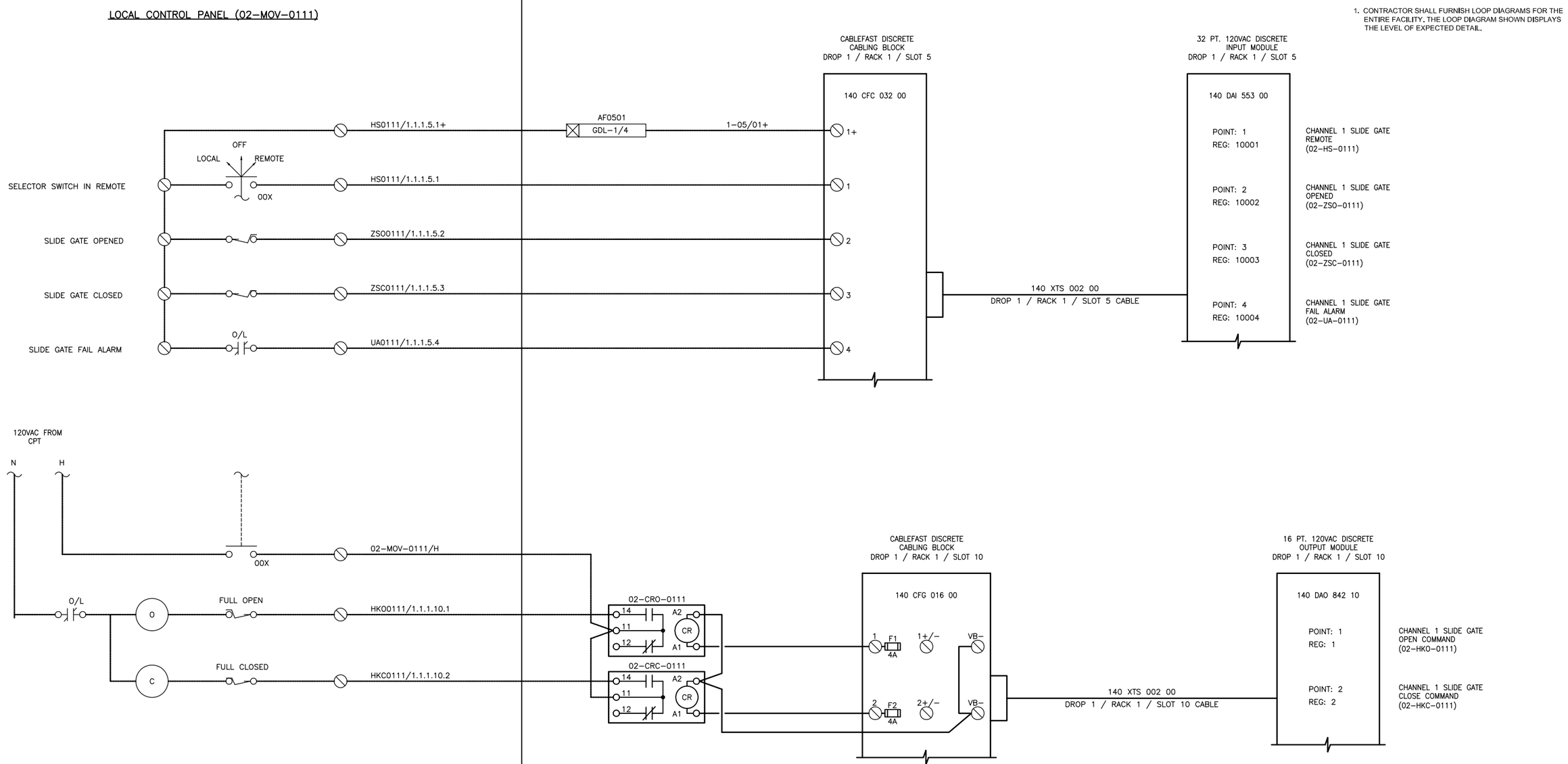

FILENAME:8127A10–6232–I025.dwg
LAST UPDATED: 11/10/2011 09:53 AM
LAST SAVED BY: mmorris

No.	DATE	REVISIONS	APPROVED

DESIGNED: MGH
DRAWN: SMW
CHECKED: TAH

RBF CONSULTING
carollo
IRVINE RANCH WATER DISTRICT

JIM MEYERHOFER	RCE NO. 48451	PROJECT MANAGER	DATE
CINDY MILLER	RCE NO. 58116	PROJECT MANAGER	DATE
PATRICIA UEMATSU	RCE NO. 36762	PRINCIPAL ENGINEER	DATE

IRVINE RANCH WATER DISTRICT
BAKER WATER TREATMENT PLANT
PROJECT NO. 11218

INSTRUMENTATION
EXAMPLE LOOP WIRING DIAGRAM–2

DRAWING I025
SHEET 569 OF 632

GENERAL NOTES:

1. CONTRACTOR SHALL FURNISH LOOP DIAGRAMS FOR THE ENTIRE FACILITY. THE LOOP DIAGRAM SHOWN DISPLAYS THE LEVEL OF EXPECTED DETAIL.

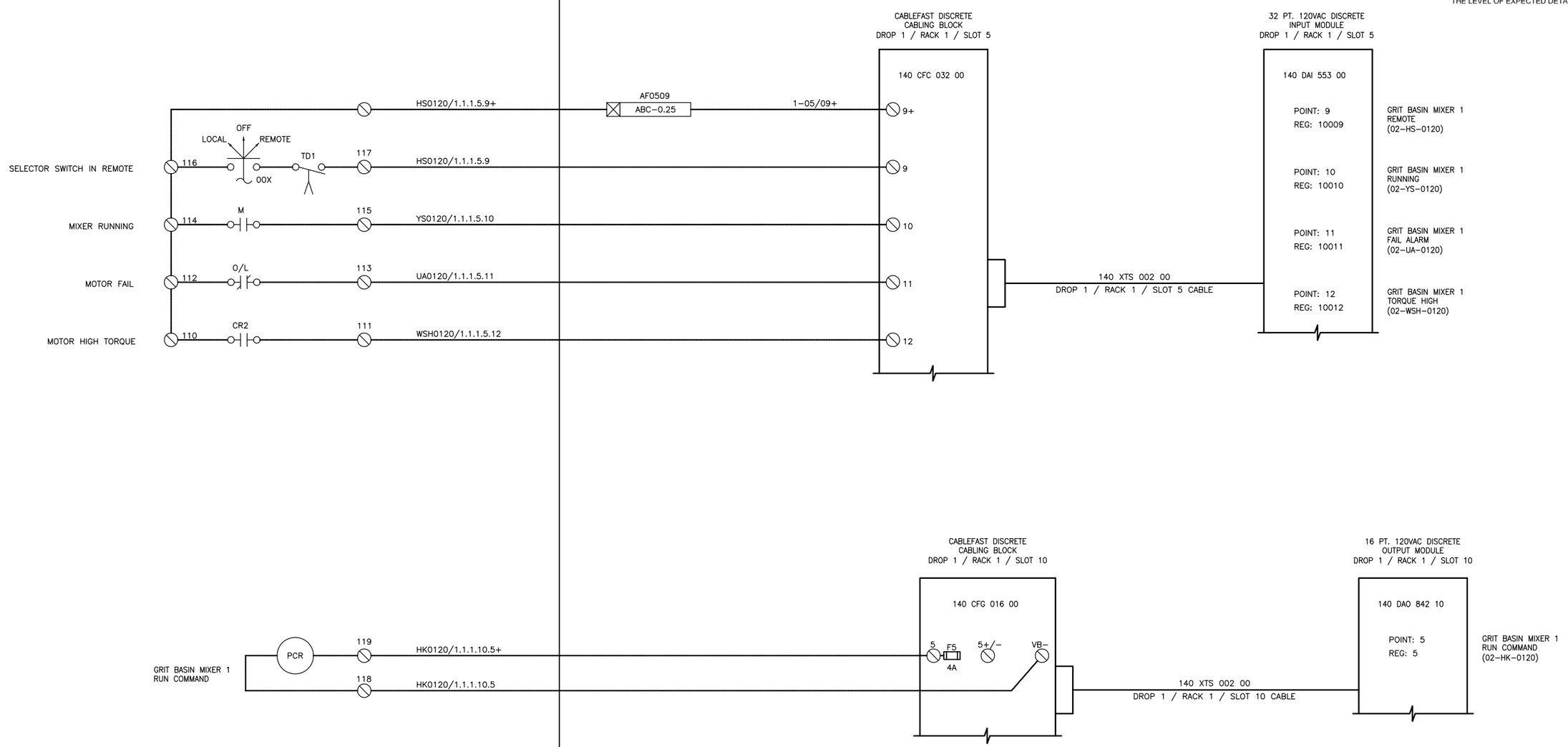

FILENAME:8127A10–6232–I026.dwg
LAST UPDATED: 11/10/2011 09:57 AM
LAST SAVED BY: mmorris

No.	DATE	REVISIONS	APPROVED

DESIGNED: MGH
DRAWN: SMW
CHECKED: TAH

RBF CONSULTING | carollo | IRVINE RANCH WATER DISTRICT

JIM MEYERHOFER	RCE NO. 48451	PROJECT MANAGER	DATE
CINDY MILLER	RCE NO. 58116	PROJECT MANAGER	DATE
PATRICIA UEMATSU	RCE NO. 36762	PRINCIPAL ENGINEER	DATE

IRVINE RANCH WATER DISTRICT
BAKER WATER TREATMENT PLANT
PROJECT NO. 11218

INSTRUMENTATION
EXAMPLE LOOP WIRING DIAGRAM–3

DRAWING I026

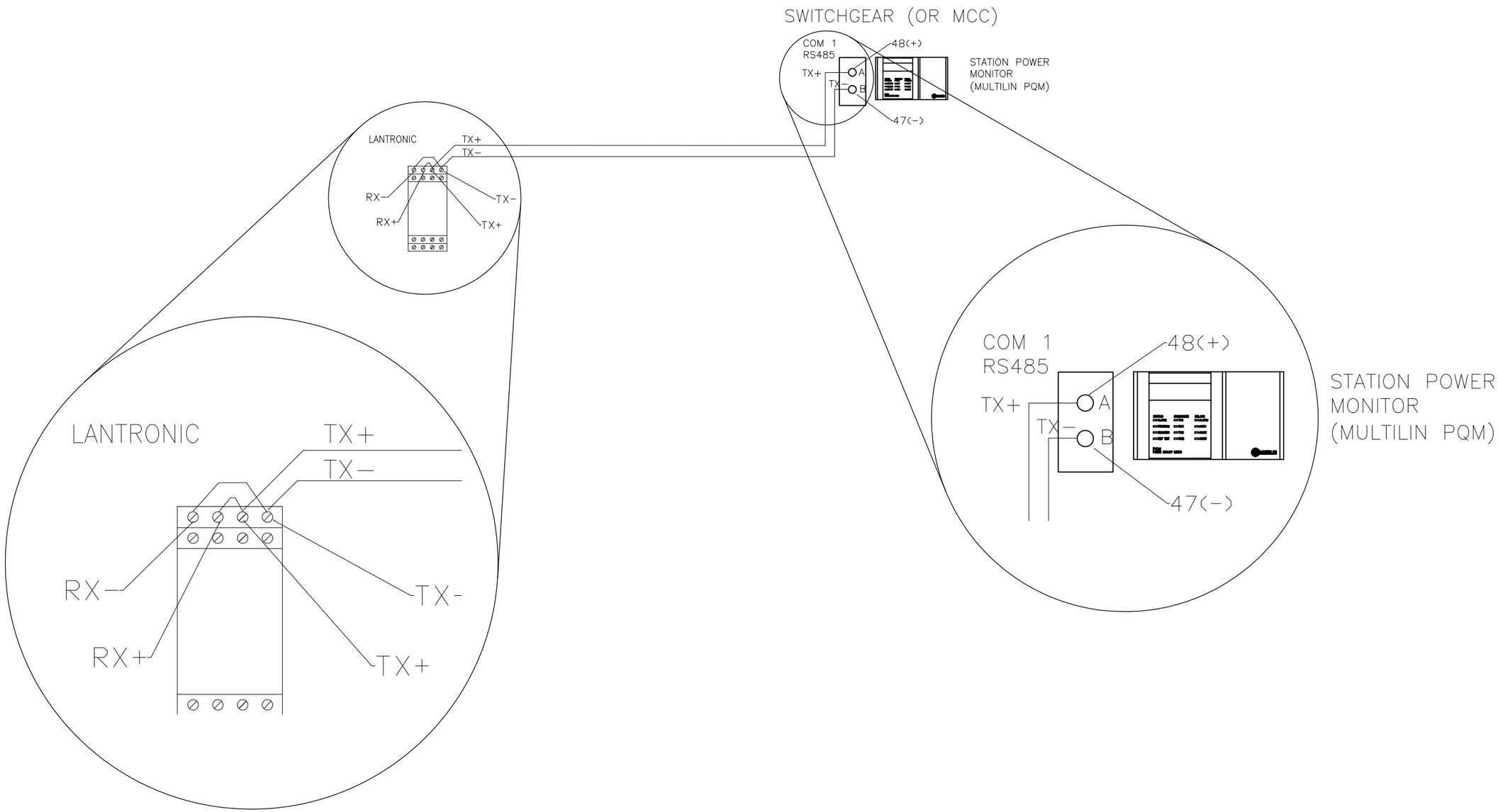

LAST SAVED BY: mmorris LAST UPDATED: 01/04/2012 12:52 PM FILENAME:8127A10-6232-I027.dwg

No.	DATE	REVISIONS	APPROVED

DESIGNED: MGH
DRAWN: SMW
CHECKED: TAH

RBF CONSULTING

carollo

IRVINE RANCH WATER DISTRICT

JIM MEYERHOFER	RCE NO. 48451	PROJECT MANAGER	DATE
CINDY MILLER	RCE NO. 58116	PROJECT MANAGER	DATE
PATRICIA UEMATSU	RCE NO. 36762	PRINCIPAL ENGINEER	DATE

IRVINE RANCH WATER DISTRICT
BAKER WATER TREATMENT PLANT
PROJECT NO. 11218

INSTRUMENTATION
EXAMPLE POWER
MONITOR CONNECTIONS

DRAWING I027

SHEET 571 OF 632

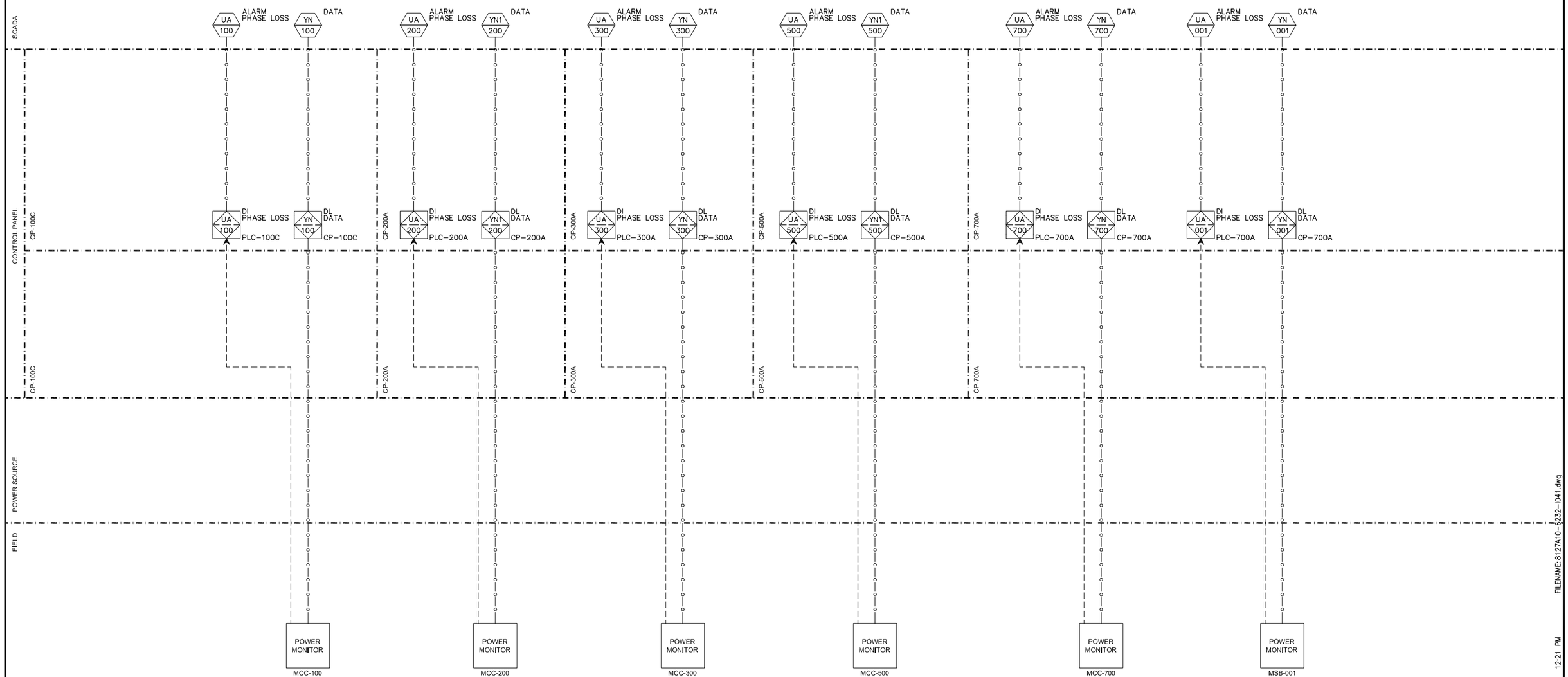

FILENAME: 8127A10-6232-I041.dwg

LAST UPDATED: 01/31/2012 12:21 PM

LAST SAVED BY: mmorris

No.	DATE	REVISIONS	APPROVED

DESIGNED: MGH
DRAWN: TLF
CHECKED: TAH

RBF CONSULTING

carollo

IRVINE RANCH WATER DISTRICT

JIM MEYERHOFER	RCE NO. 48451	PROJECT MANAGER	DATE
CINDY MILLER	RCE NO. 58116	PROJECT MANAGER	DATE
PATRICIA UEMATSU	RCE NO. 36762	PRINCIPAL ENGINEER	DATE

IRVINE RANCH WATER DISTRICT
BAKER WATER TREATMENT PLANT
PROJECT NO. 11218

P&ID
POWER MONITORING

DRAWING I041

SHEET 572 OF 632

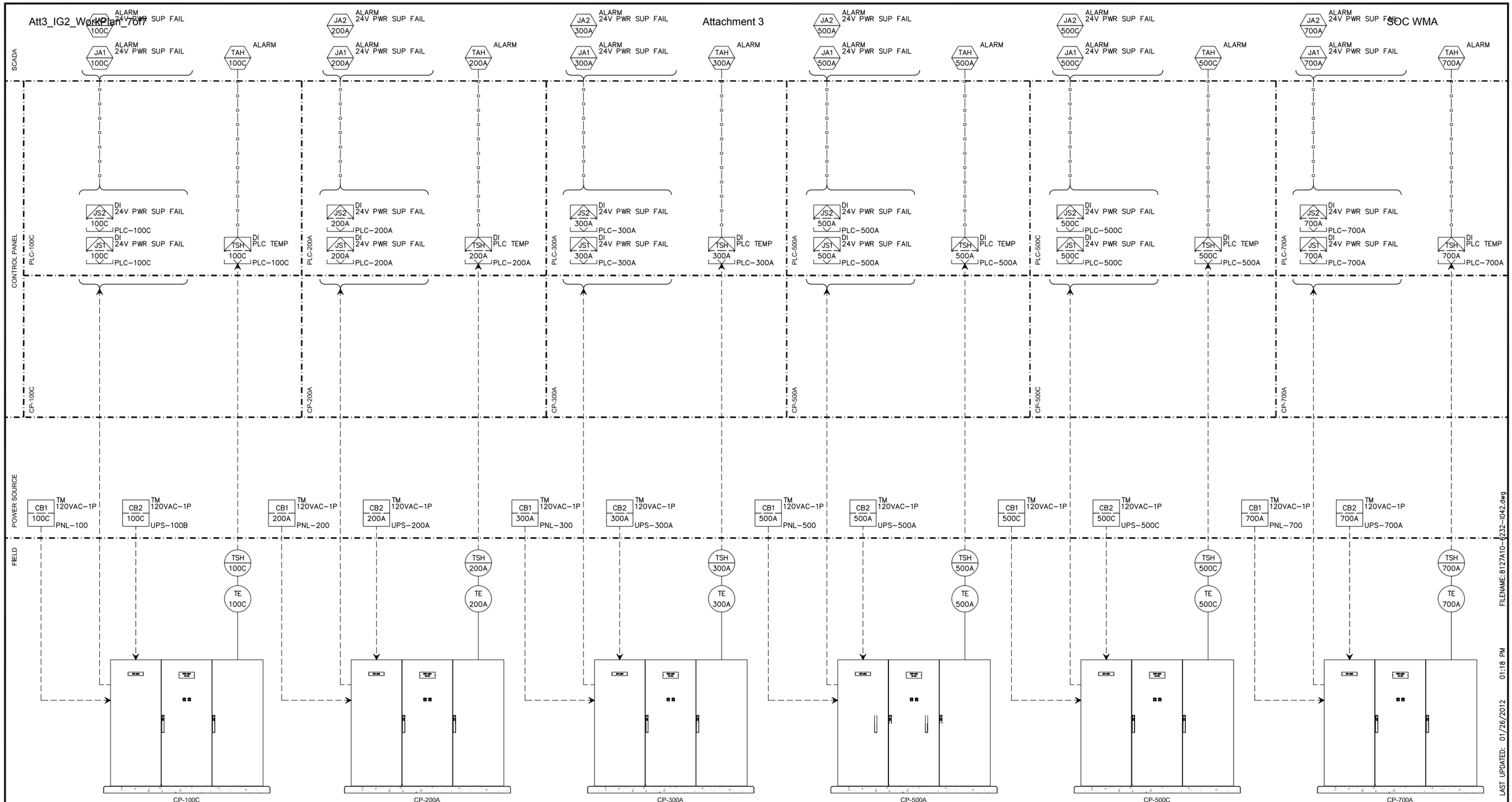

FILENAME: 8127A10-6232-I042.dwg
LAST UPDATED: 01/26/2012 01:18 PM
LAST SAVED BY: broepken

No.	DATE	REVISIONS	APPROVED

DESIGNED: MGH
DRAWN: TLF
CHECKED: TAH

RBF CONSULTING
carollo
IRVINE RANCH WATER DISTRICT

JIM MEYERHOFER	RCE NO. 48451	PROJECT MANAGER	DATE
CINDY MILLER	RCE NO. 58116	PROJECT MANAGER	DATE
PATRICIA UEMATSU	RCE NO. 36762	PRINCIPAL ENGINEER	DATE

IRVINE RANCH WATER DISTRICT
BAKER WATER TREATMENT PLANT
PROJECT NO. 11218

P&ID
MISCELLANEOUS SIGNALS-1

DRAWING I042
SHEET 573 OF 632

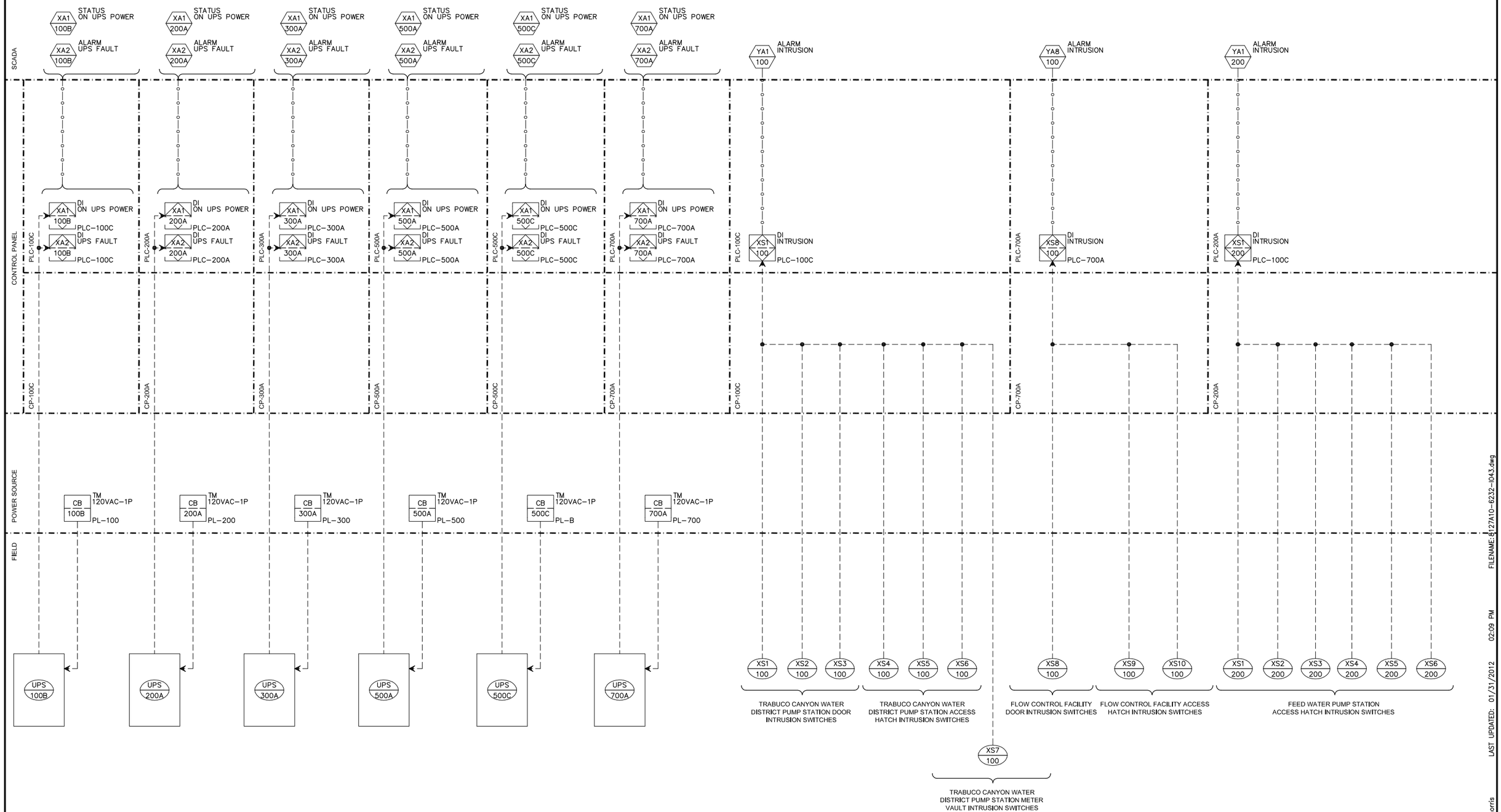

FILENAME: 6127A10-6232-I043.dwg

LAST UPDATED: 01/31/2012 02:09 PM

LAST SAVED BY: mmorris

No.	DATE	REVISIONS	APPROVED

DESIGNED: MGH

DRAWN: TLF

CHECKED: TAH

RBF CONSULTING

carollo

IRVINE RANCH WATER DISTRICT

JIM MEYERHOFER	RCE NO. 48451	PROJECT MANAGER	DATE
CINDY MILLER	RCE NO. 58116	PROJECT MANAGER	DATE
PATRICIA UEMATSU	RCE NO. 36762	PRINCIPAL ENGINEER	DATE

IRVINE RANCH WATER DISTRICT
BAKER WATER TREATMENT PLANT
PROJECT NO. 11218

P&ID
MISCELLANEOUS SIGNALS-2

DRAWING I043

SHEET 574 OF 632

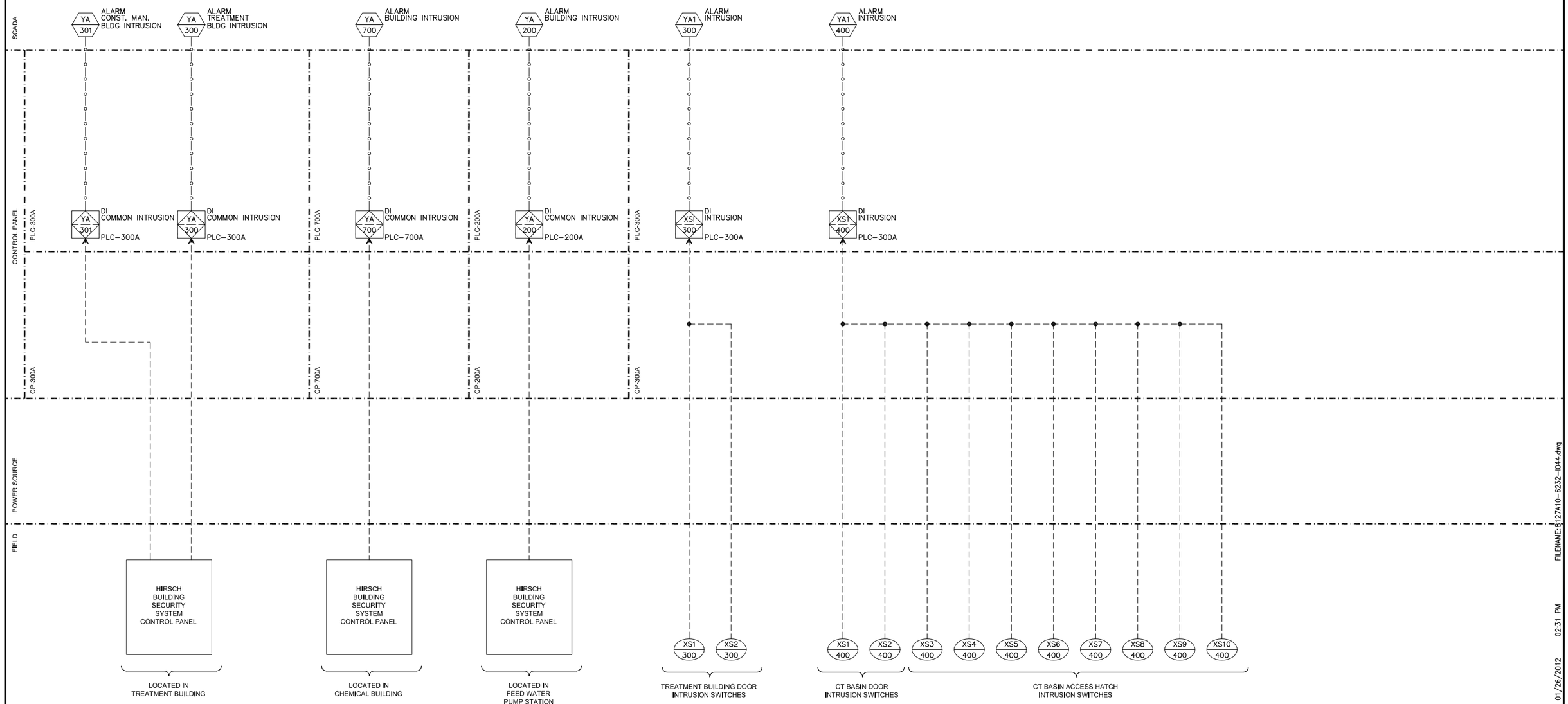

FILENAME: 8127A10-6232-I044.dwg
LAST UPDATED: 01/26/2012 02:31 PM
LAST SAVED BY: broepken

No.	DATE	REVISIONS	APPROVED

DESIGNED: MGH
DRAWN: TLF
CHECKED: TAH

RBF CONSULTING
carollo
IRVINE RANCH WATER DISTRICT

JIM MEYERHOFER	RCE NO. 48451	PROJECT MANAGER	DATE
CINDY MILLER	RCE NO. 58116	PROJECT MANAGER	DATE
PATRICIA UEMATSU	RCE NO. 36762	PRINCIPAL ENGINEER	DATE

IRVINE RANCH WATER DISTRICT
BAKER WATER TREATMENT PLANT
PROJECT NO. 11218

P&ID
MISCELLANEOUS SIGNALS-3

DRAWING I044
SHEET 575 OF 632

KEY NOTES:

1. EQUIPMENT TAG NUMBER PRECEDED WITH "03-PA".

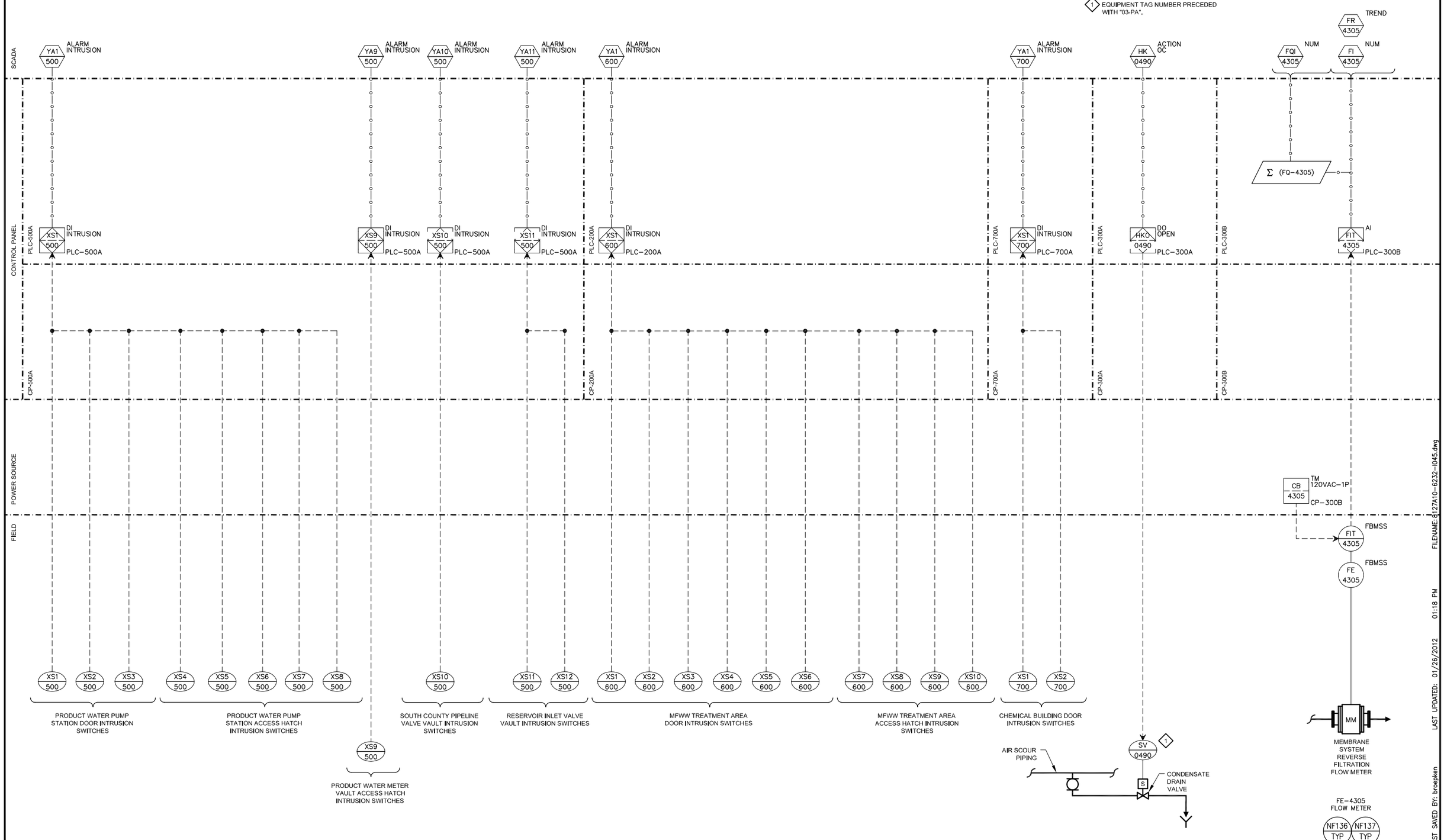

FILENAME: 8127A10-6232-I045.dwg

LAST UPDATED: 01/26/2012 01:18 PM

LAST SAVED BY: broepken

No.	DATE	REVISIONS	APPROVED

DESIGNED: MGH

DRAWN: TLF

CHECKED: TAH

RBF CONSULTING

carollo

IRVINE RANCH WATER DISTRICT

JIM MEYERHOFER	RCE NO. 48451	PROJECT MANAGER	DATE
CINDY MILLER	RCE NO. 58116	PROJECT MANAGER	DATE
PATRICIA UEMATSU	RCE NO. 36762	PRINCIPAL ENGINEER	DATE

IRVINE RANCH WATER DISTRICT
BAKER WATER TREATMENT PLANT
PROJECT NO. 11218

P&ID
MISCELLANEOUS SIGNALS-4

DRAWING I045

SHEET 576 OF 632

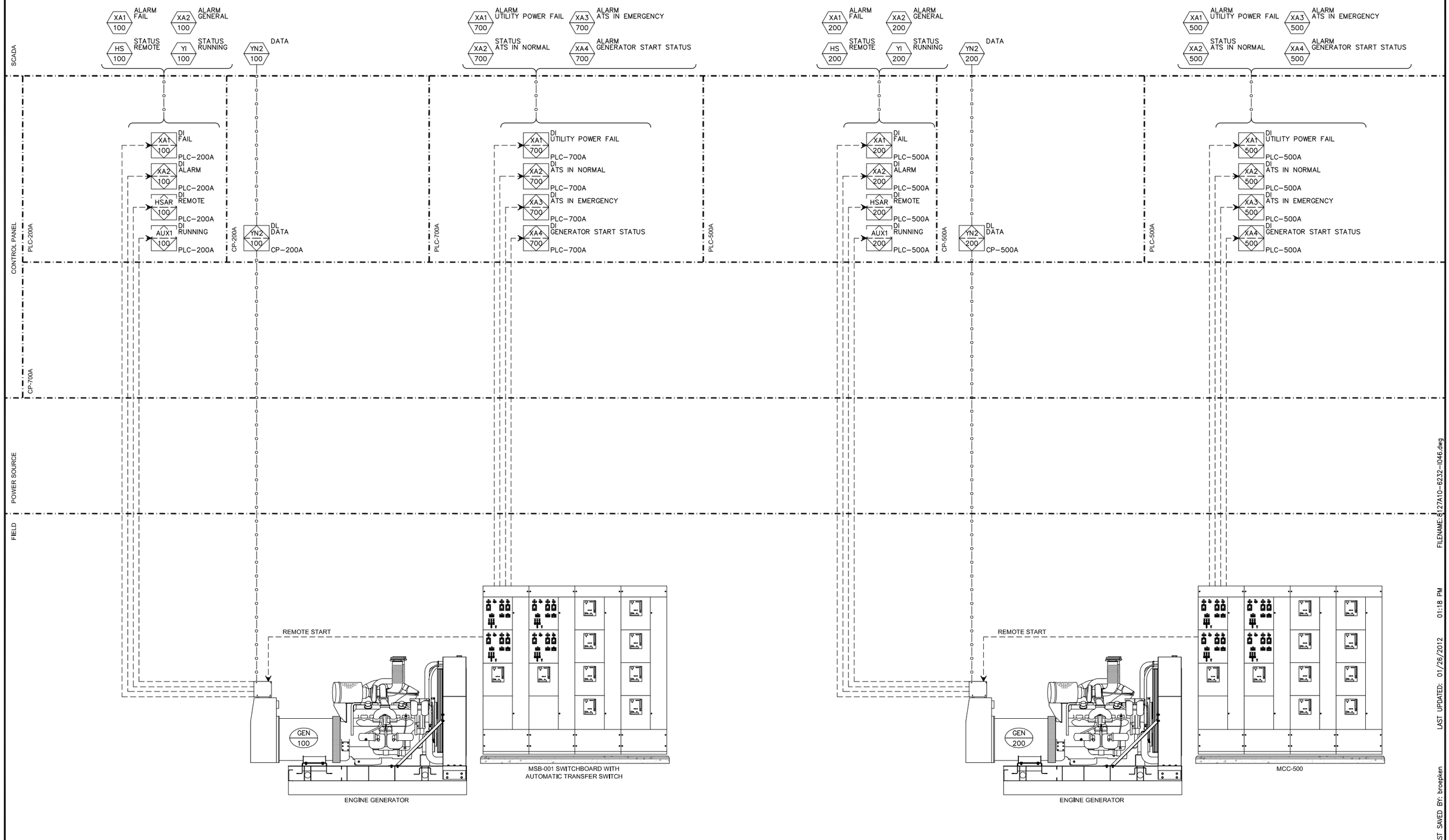

FILENAME: 8127A10-6232-I046.dwg

LAST UPDATED: 01/26/2012 01:18 PM

LAST SAVED BY: broepken

No.	DATE	REVISIONS	APPROVED

DESIGNED: MGH

DRAWN: TLF

CHECKED: TAH

RBF CONSULTING

carollo

IRVINE RANCH WATER DISTRICT

JIM MEYERHOFER	RCE NO. 48451	PROJECT MANAGER	DATE
CINDY MILLER	RCE NO. 58116	PROJECT MANAGER	DATE
PATRICIA UEMATSU	RCE NO. 36762	PRINCIPAL ENGINEER	DATE

IRVINE RANCH WATER DISTRICT
BAKER WATER TREATMENT PLANT
PROJECT NO. 11218

P&ID
ENGINE GENERATOR

DRAWING I046

SHEET 577 OF 632

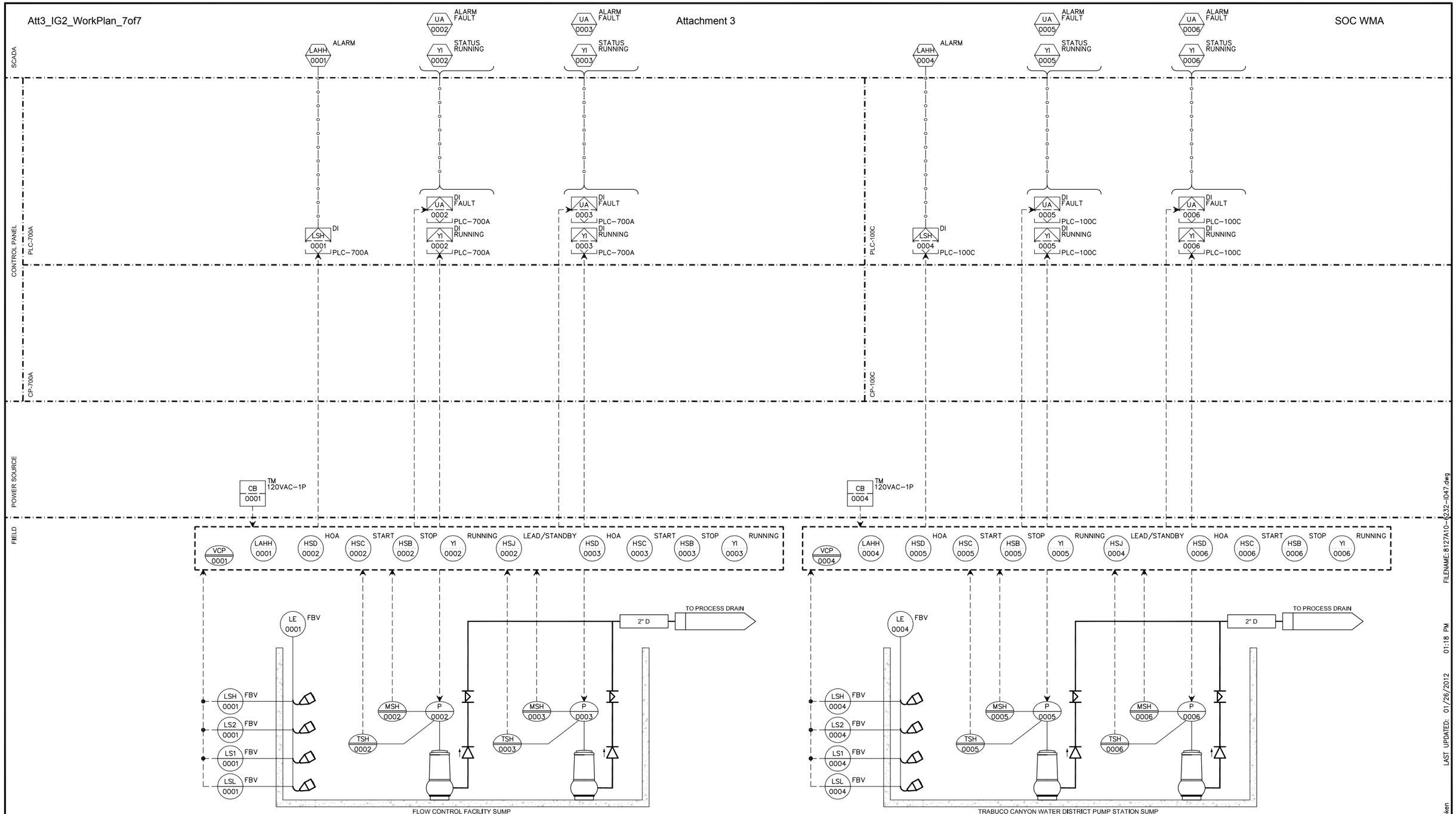

EQUIPMENT TAG NUMBERS ON THIS DRAWING ARE PRECEDED W/ **01-D-** UNLESS OTHERWISE LABELED

LE-0001 FLOAT SWITCHES — NL100 TYP

P-0002 SUMP PUMP 0.5HP 120VAC 1PH

P-0003 SUMP PUMP 0.5HP 120VAC 1PH

LE-0004 FLOAT SWITCHES — NL100 TYP

P-0005 SUMP PUMP 0.5HP 120VAC 1PH

P-0006 SUMP PUMP 0.5HP 120VAC 1PH

No.	DATE	REVISIONS	APPROVED

DESIGNED: MGH
DRAWN: TLF
CHECKED: TAH

RBF CONSULTING

carollo

IRVINE RANCH WATER DISTRICT

JIM MEYERHOFER	RCE NO. 48451	PROJECT MANAGER	DATE
CINDY MILLER	RCE NO. 58116	PROJECT MANAGER	DATE
PATRICIA UEMATSU	RCE NO. 36762	PRINCIPAL ENGINEER	DATE

IRVINE RANCH WATER DISTRICT
BAKER WATER TREATMENT PLANT
PROJECT NO. 11218

P&ID
SUMP PUMPS - 1

DRAWING I047

SHEET 578 OF 632

FILENAME: 8127A10-6232-I047.dwg
LAST UPDATED: 01/26/2012 01:18 PM
LAST SAVED BY: broepken

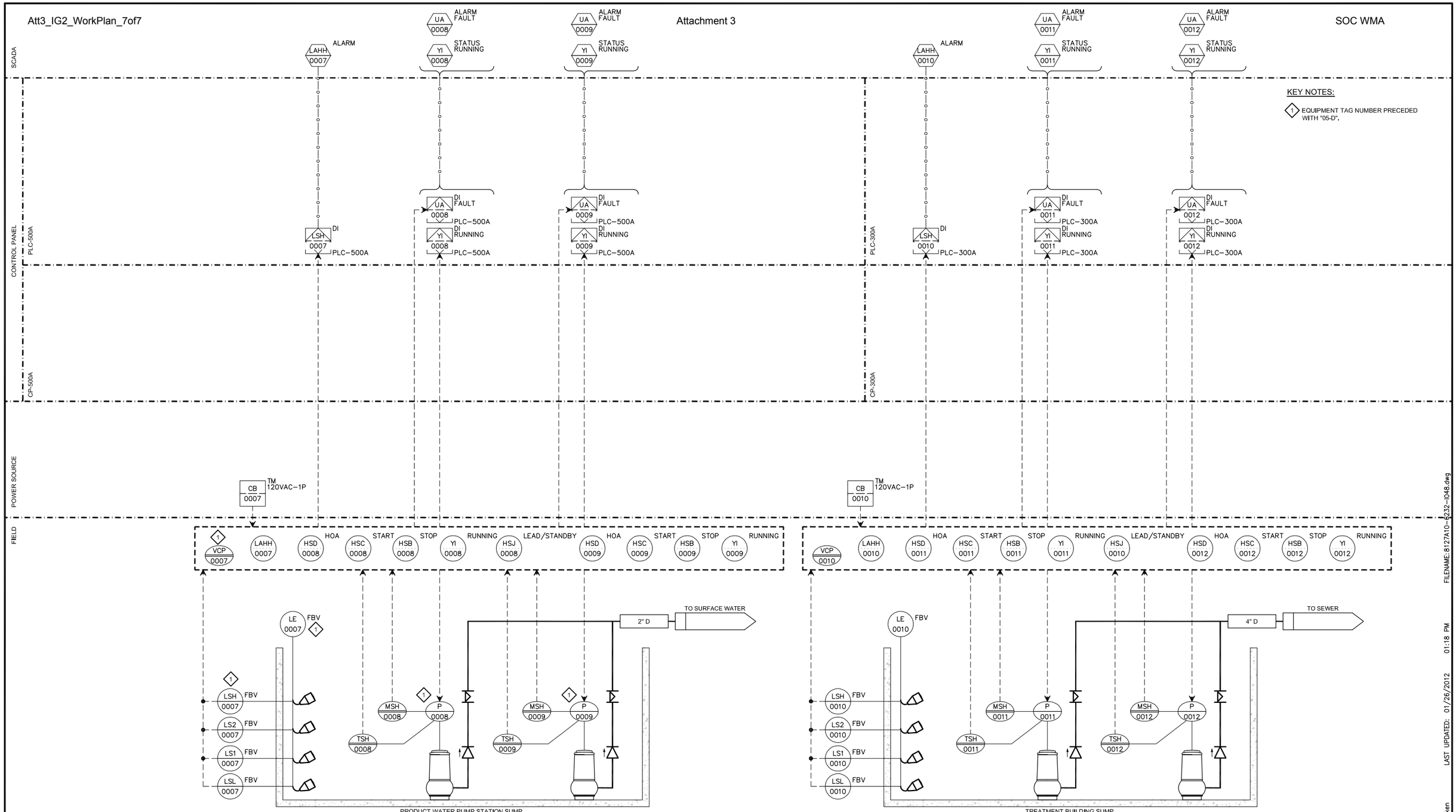

KEY NOTES:

1. EQUIPMENT TAG NUMBER PRECEDED WITH "05-D".

EQUIPMENT TAG NUMBERS ON THIS DRAWING ARE PRECEDED W/ **03-D-** UNLESS OTHERWISE LABELED

LE-0007 FLOAT SWITCHES — NL100 TYP

P-0008 SUMP PUMP 0.5HP 120VAC 1PH

P-0009 SUMP PUMP 0.5HP 120VAC 1PH

LE-0010 FLOAT SWITCHES — NL100 TYP

P-0011 SUMP PUMP 0.5HP 120VAC 1PH

P-0012 SUMP PUMP 0.5HP 120VAC 1PH

No.	DATE	REVISIONS	APPROVED

DESIGNED: MGH
DRAWN: TLF
CHECKED: TAH

RBF CONSULTING

carollo

IRVINE RANCH WATER DISTRICT

JIM MEYERHOFER	RCE NO. 48451	PROJECT MANAGER	DATE
CINDY MILLER	RCE NO. 58116	PROJECT MANAGER	DATE
PATRICIA UEMATSU	RCE NO. 36762	PRINCIPAL ENGINEER	DATE

IRVINE RANCH WATER DISTRICT
BAKER WATER TREATMENT PLANT
PROJECT NO. 11218

P&ID
SUMP PUMPS - 2

DRAWING I048

SHEET 579 OF 632

FILENAME: 8127A10-6232-I048.dwg
LAST UPDATED: 01/26/2012 01:18 PM
LAST SAVED BY: broepken

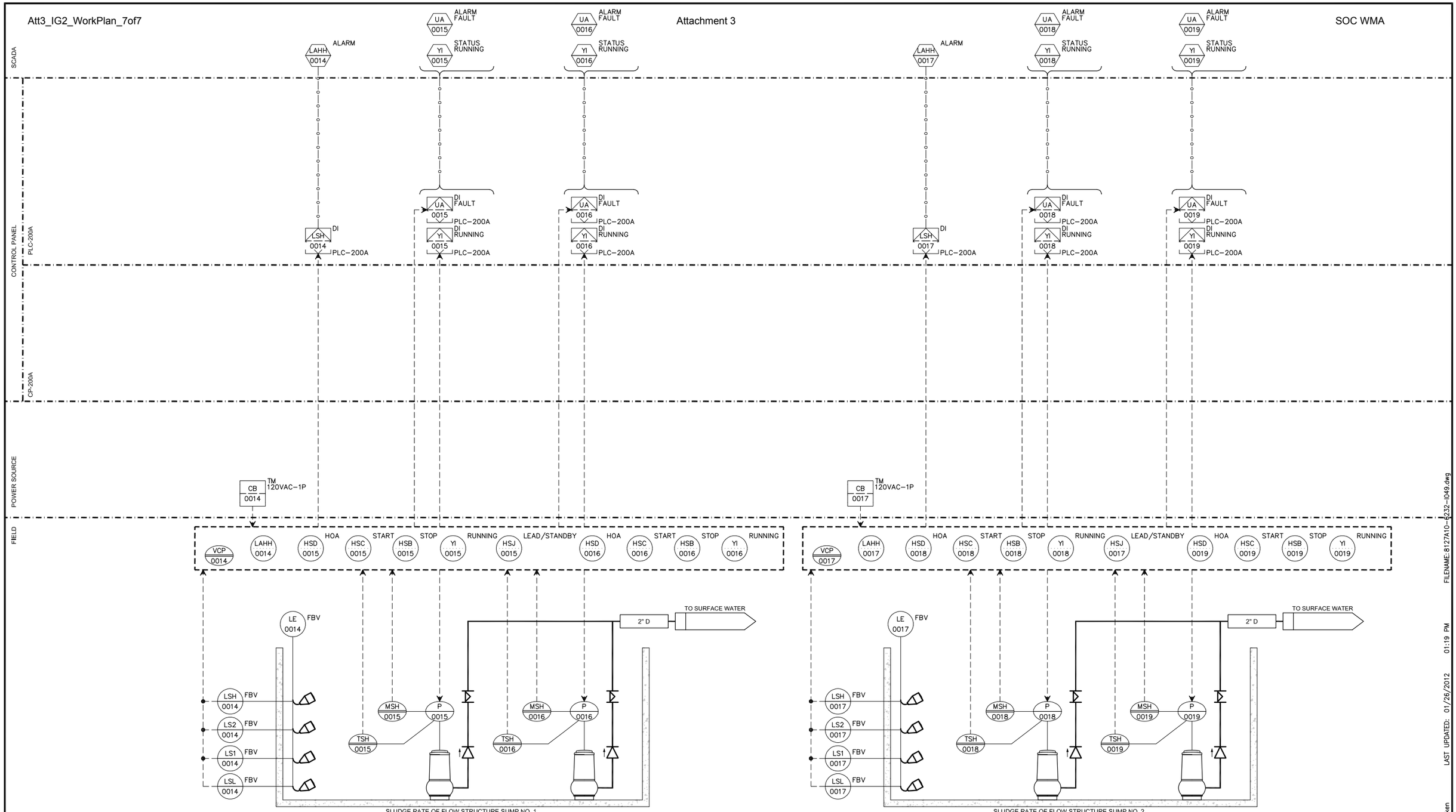

EQUIPMENT TAG NUMBERS ON THIS DRAWING ARE PRECEDED W/ **06-D-** UNLESS OTHERWISE LABELED

LE-0014 FLOAT SWITCHES NL100 TYP

P-0015 SUMP PUMP 0.5HP 120VAC 1PH

P-0016 SUMP PUMP 0.5HP 120VAC 1PH

LE-0017 FLOAT SWITCHES NL100 TYP

P-0018 SUMP PUMP 0.5HP 120VAC 1PH

P-0019 SUMP PUMP 0.5HP 120VAC 1PH

FILENAME: 8127A10-6232-I049.dwg

LAST UPDATED: 01/26/2012 01:19 PM

LAST SAVED BY: broepken

No.	DATE	REVISIONS	APPROVED

DESIGNED: MGH

DRAWN: TLF

CHECKED: TAH

RBF CONSULTING

carollo

IRVINE RANCH WATER DISTRICT

JIM MEYERHOFER	RCE NO. 48451	PROJECT MANAGER	DATE
CINDY MILLER	RCE NO. 58116	PROJECT MANAGER	DATE
PATRICIA UEMATSU	RCE NO. 36762	PRINCIPAL ENGINEER	DATE

IRVINE RANCH WATER DISTRICT
BAKER WATER TREATMENT PLANT
PROJECT NO. 11218

P&ID
SUMP PUMPS - 3

DRAWING I049

SHEET 580 OF 632

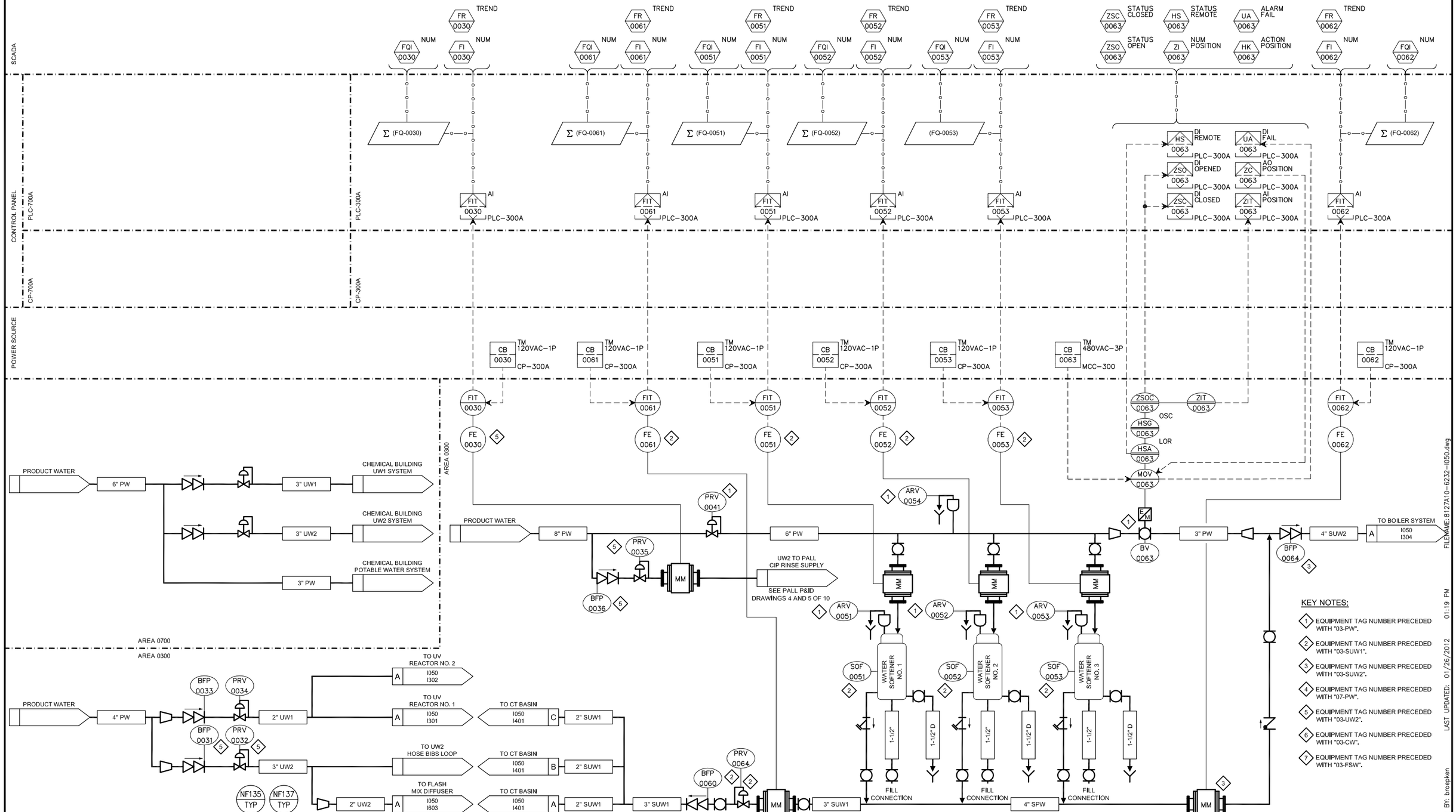

EQUIPMENT TAG NUMBERS ON THIS DRAWING ARE PRECEDED W/ **03-UW1-** UNLESS OTHERWISE LABELED

No.	DATE	REVISIONS	APPROVED

DESIGNED: MGH
DRAWN: TLF
CHECKED: TAH

RBF CONSULTING

carollo

IRVINE RANCH WATER DISTRICT

JIM MEYERHOFER	RCE NO. 48451	PROJECT MANAGER	DATE
CINDY MILLER	RCE NO. 58116	PROJECT MANAGER	DATE
PATRICIA UEMATSU	RCE NO. 36762	PRINCIPAL ENGINEER	DATE

IRVINE RANCH WATER DISTRICT
BAKER WATER TREATMENT PLANT
PROJECT NO. 11218

P&ID
POTABLE AND UTILITY WATER

DRAWING I050

SHEET 581 OF 632

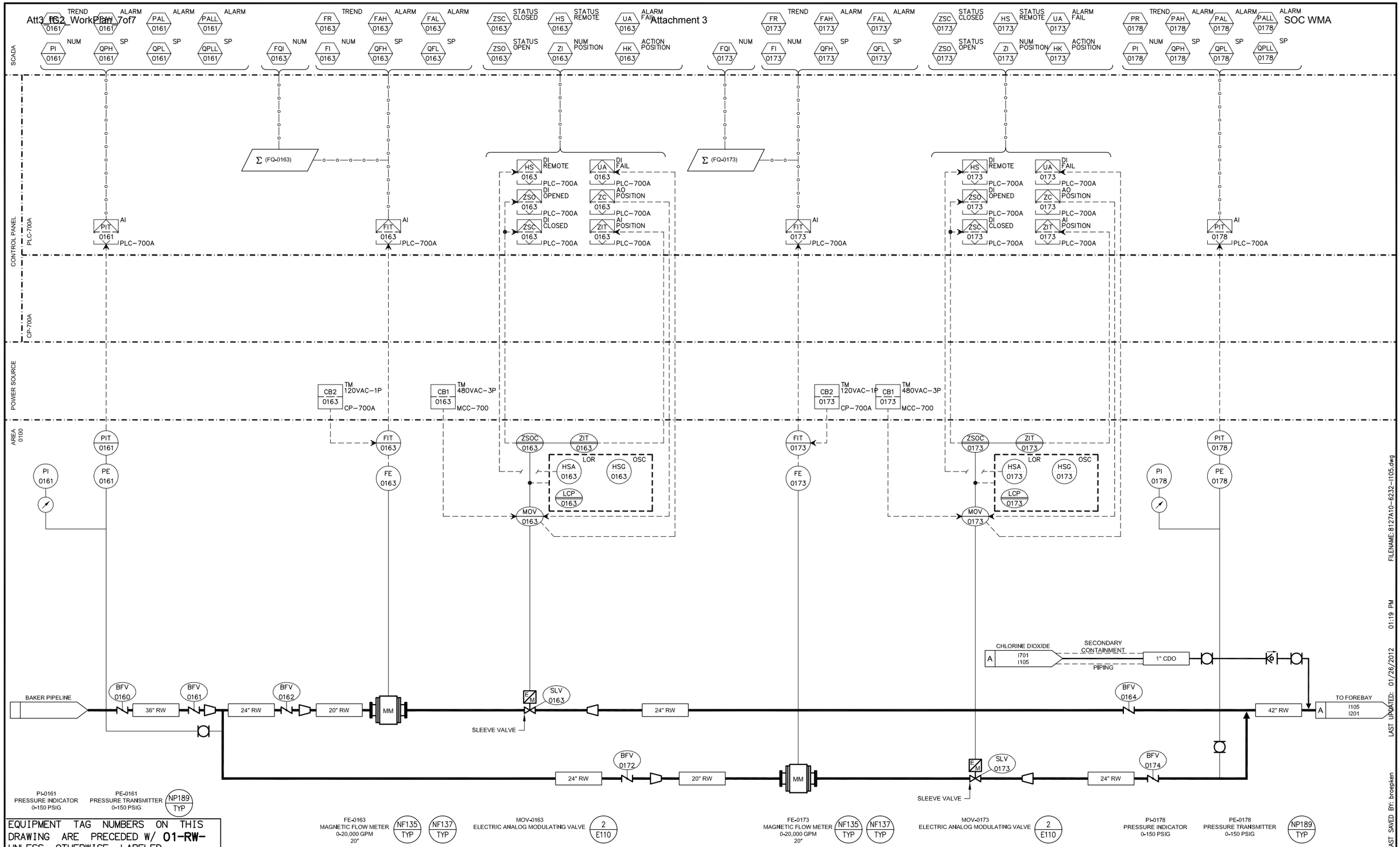

EQUIPMENT TAG NUMBERS ON THIS DRAWING ARE PRECEDED W/ **01-RW-** UNLESS OTHERWISE LABELED

No.	DATE	REVISIONS	APPROVED

DESIGNED: MGH
DRAWN: TLF
CHECKED: TAH

RBF CONSULTING
carollo
IRVINE RANCH WATER DISTRICT

JIM MEYERHOFER	RCE NO. 48451	PROJECT MANAGER	DATE
CINDY MILLER	RCE NO. 58116	PROJECT MANAGER	DATE
PATRICIA UEMATSU	RCE NO. 36762	PRINCIPAL ENGINEER	DATE

IRVINE RANCH WATER DISTRICT
BAKER WATER TREATMENT PLANT
PROJECT NO. 11218

P&ID
FLOW CONTROL FACILITY

DRAWING I105
SHEET 582 OF 632

FILENAME: 8127A10-6232-I105.dwg
LAST UPDATED: 01/26/2012 01:19 PM
LAST SAVED BY: broepken

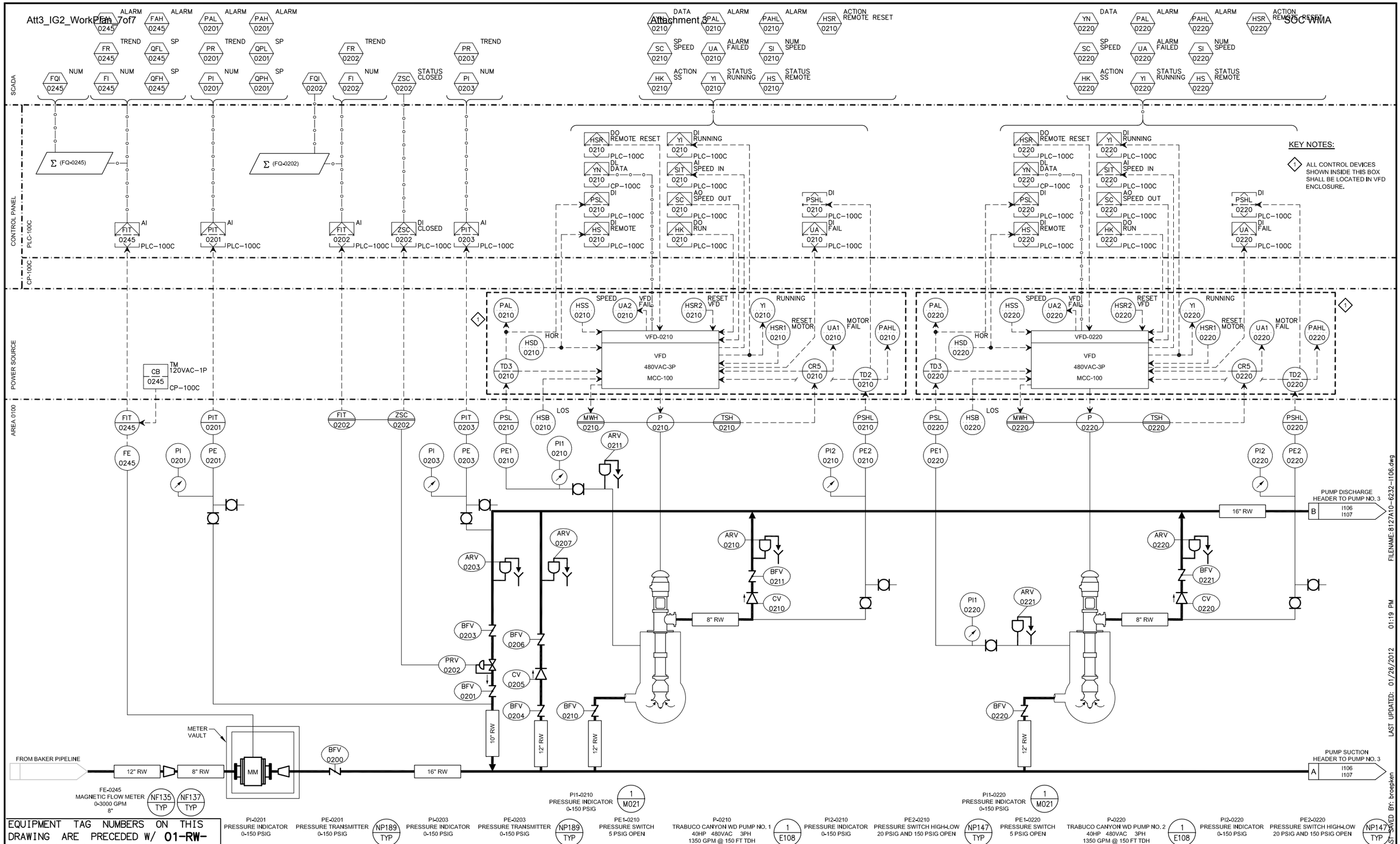

EQUIPMENT TAG NUMBERS ON THIS DRAWING ARE PRECEDED W/ **01-RW-** UNLESS OTHERWISE LABELED

No.	DATE	REVISIONS	APPROVED

DESIGNED: MGH
DRAWN: TLF
CHECKED: TAH

RBF CONSULTING
carollo
IRVINE RANCH WATER DISTRICT

JIM MEYERHOFER	RCE NO. 48451	PROJECT MANAGER	DATE
CINDY MILLER	RCE NO. 58116	PROJECT MANAGER	DATE
PATRICIA UEMATSU	RCE NO. 36762	PRINCIPAL ENGINEER	DATE

IRVINE RANCH WATER DISTRICT
BAKER WATER TREATMENT PLANT
PROJECT NO. 11218

P&ID
TRABUCO CANYON WATER DISTRICT
PUMP STATION-1

DRAWING I106

Attachment 3

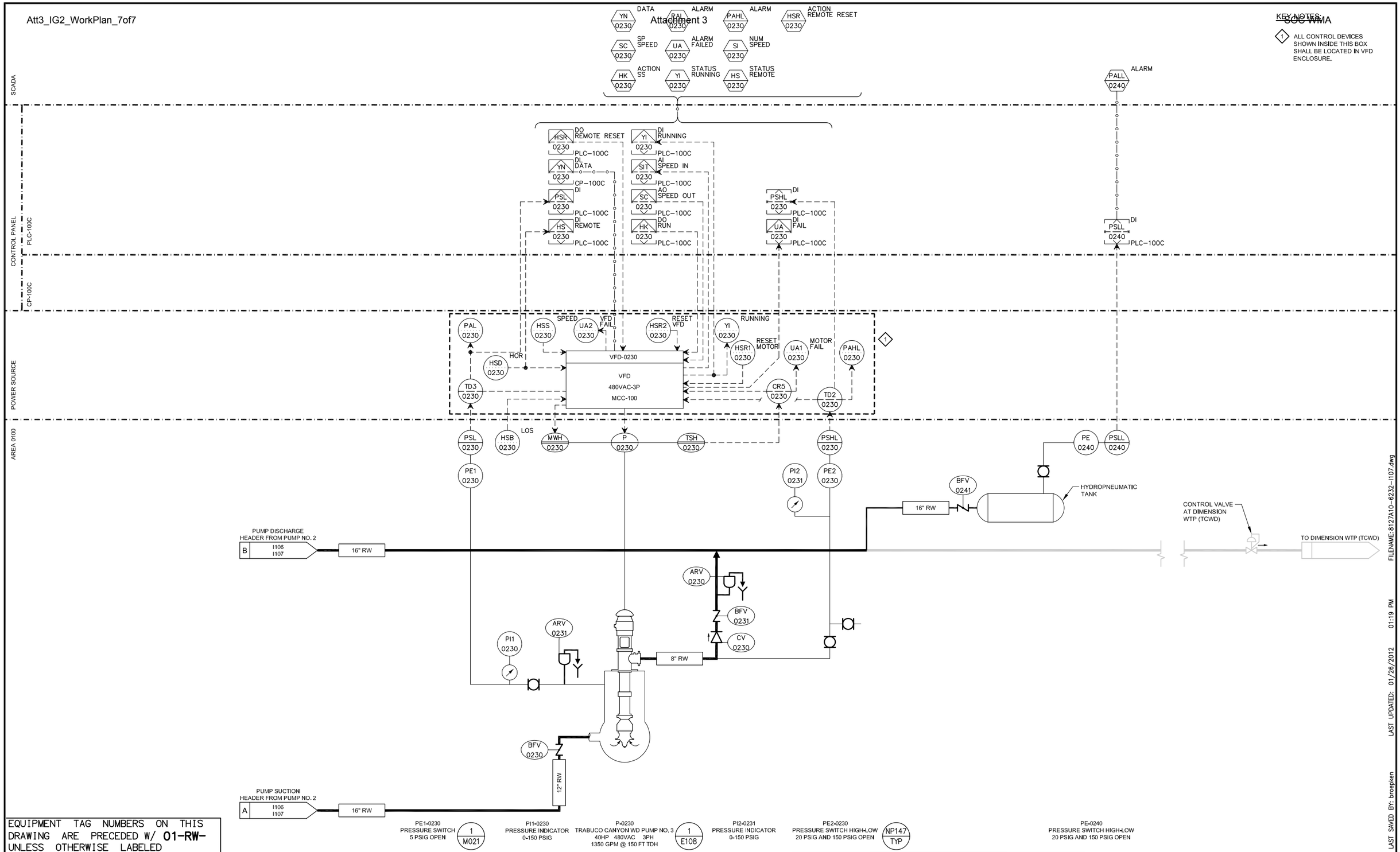

EQUIPMENT TAG NUMBERS ON THIS DRAWING ARE PRECEDED W/ 01-RW- UNLESS OTHERWISE LABELED

No.	DATE	REVISIONS	APPROVED

DESIGNED: MGH
DRAWN: TLF
CHECKED: TAH

RBF CONSULTING

carollo

IRVINE RANCH WATER DISTRICT

JIM MEYERHOFER	RCE NO. 48451	PROJECT MANAGER	DATE
CINDY MILLER	RCE NO. 58116	PROJECT MANAGER	DATE
PATRICIA UEMATSU	RCE NO. 36762	PRINCIPAL ENGINEER	DATE

IRVINE RANCH WATER DISTRICT
BAKER WATER TREATMENT PLANT
PROJECT NO. 11218

P&ID
TRABUCO CANYON WATER DISTRICT
PUMP STATION-2

DRAWING I107
SHEET 584 OF 632

FILENAME: 8127A10-6232-I107.dwg
LAST UPDATED: 01/26/2012 01:19 PM
LAST SAVED BY: broepken

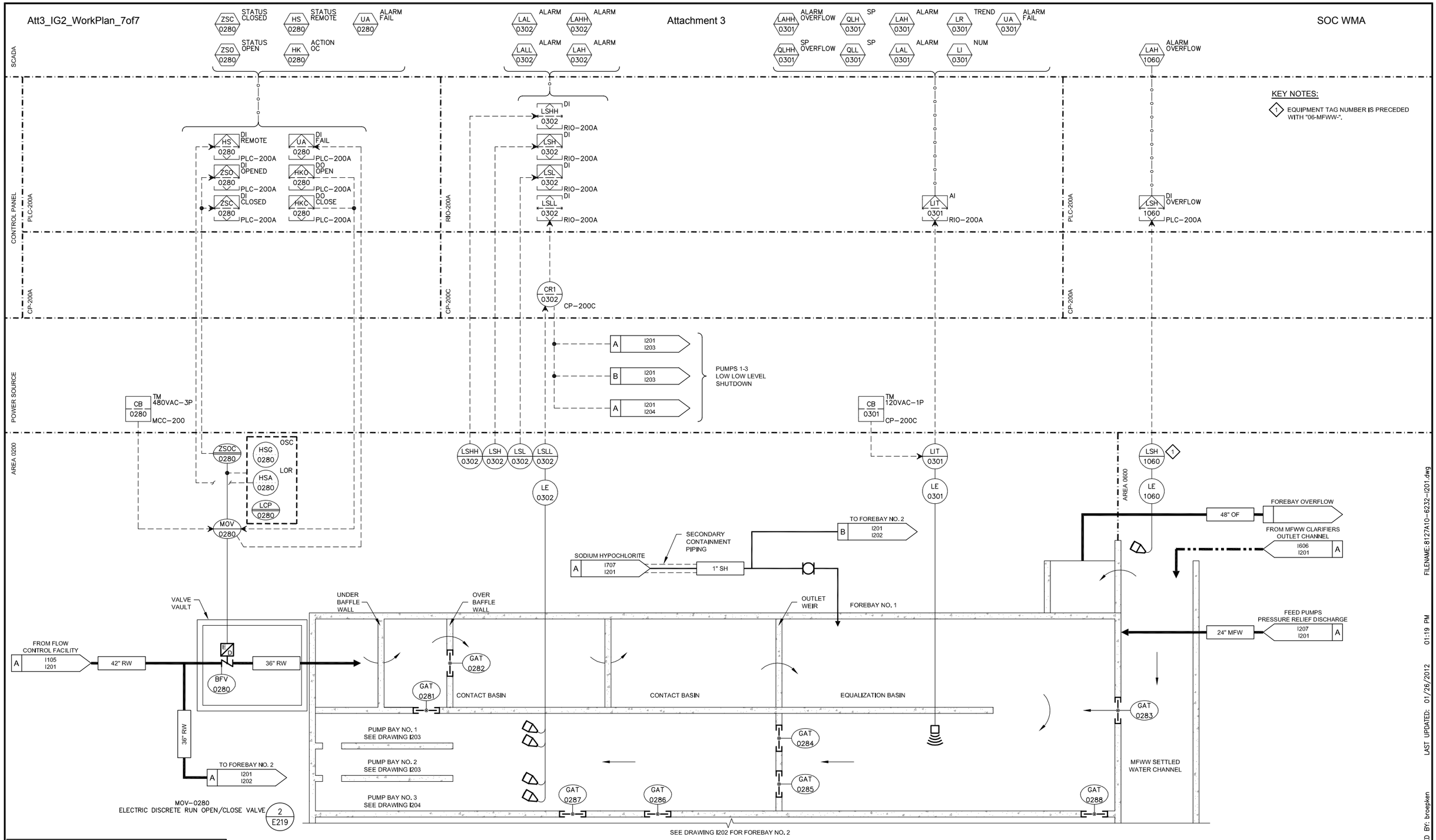

EQUIPMENT TAG NUMBERS ON THIS DRAWING ARE PRECEDED W/ **02-MFW-** UNLESS OTHERWISE LABELED

No.	DATE	REVISIONS	APPROVED

DESIGNED: MGH
DRAWN: DKI
CHECKED: TAH

RBF CONSULTING

carollo

IRVINE RANCH WATER DISTRICT

JIM MEYERHOFER	RCE NO. 48451	PROJECT MANAGER	DATE
CINDY MILLER	RCE NO. 58116	PROJECT MANAGER	DATE
PATRICIA UEMATSU	RCE NO. 36762	PRINCIPAL ENGINEER	DATE

IRVINE RANCH WATER DISTRICT
BAKER WATER TREATMENT PLANT
PROJECT NO. 11218

P&ID
FOREBAY-1

DRAWING I201

SHEET 585 OF 632

FILENAME:8127A10-6232-I201.dwg
LAST UPDATED: 01/26/2012 01:19 PM
LAST SAVED BY: broepken

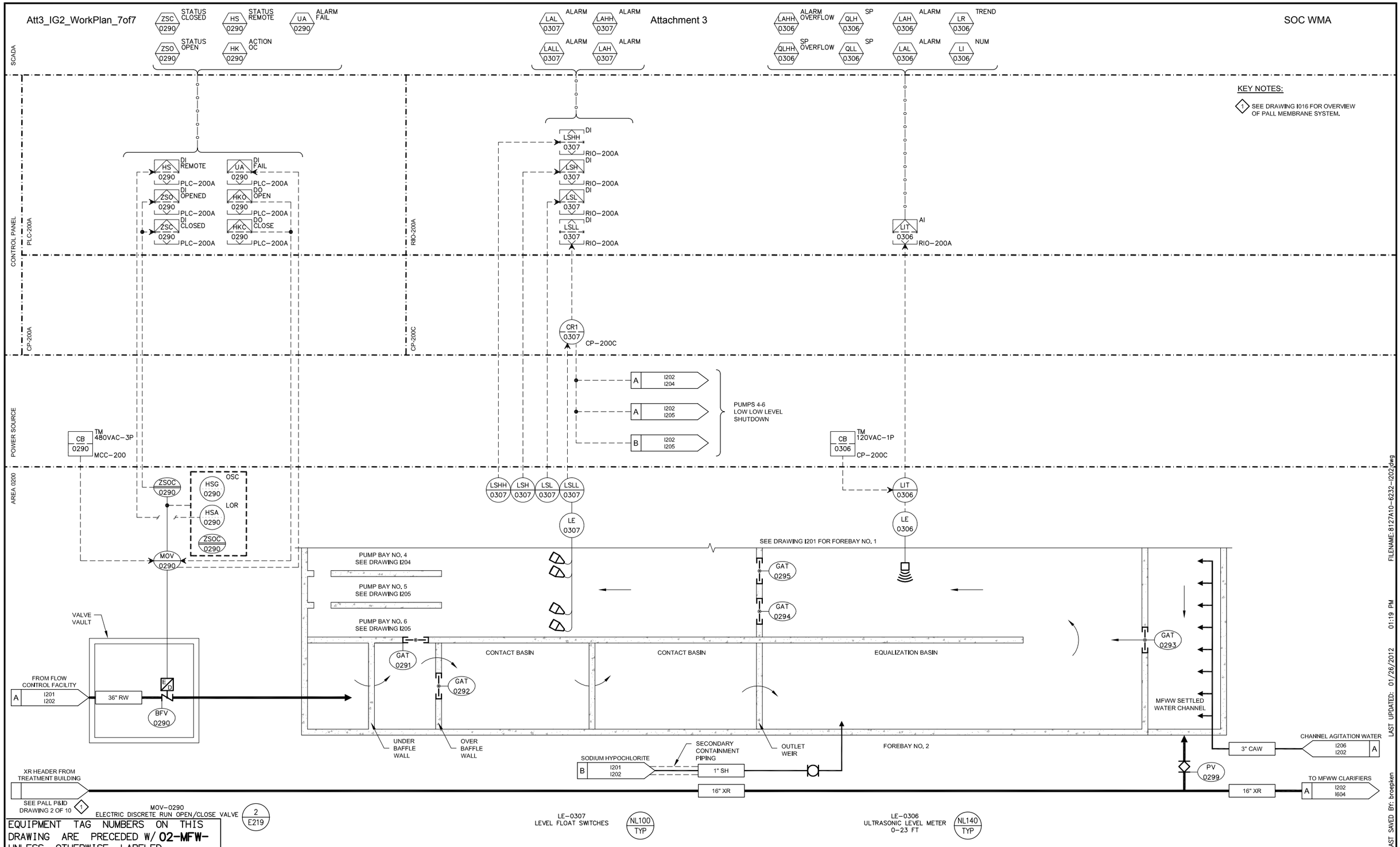

EQUIPMENT TAG NUMBERS ON THIS DRAWING ARE PRECEDED W/ **02-MFW-** UNLESS OTHERWISE LABELED

No.	DATE	REVISIONS	APPROVED

DESIGNED: MGH
DRAWN: DKI
CHECKED: TAH

RBF CONSULTING

carollo

IRVINE RANCH WATER DISTRICT

JIM MEYERHOFER	RCE NO. 48451	PROJECT MANAGER	DATE
CINDY MILLER	RCE NO. 58116	PROJECT MANAGER	DATE
PATRICIA UEMATSU	RCE NO. 36762	PRINCIPAL ENGINEER	DATE

IRVINE RANCH WATER DISTRICT
BAKER WATER TREATMENT PLANT
PROJECT NO. 11218

P&ID
FOREBAY-2

DRAWING I202

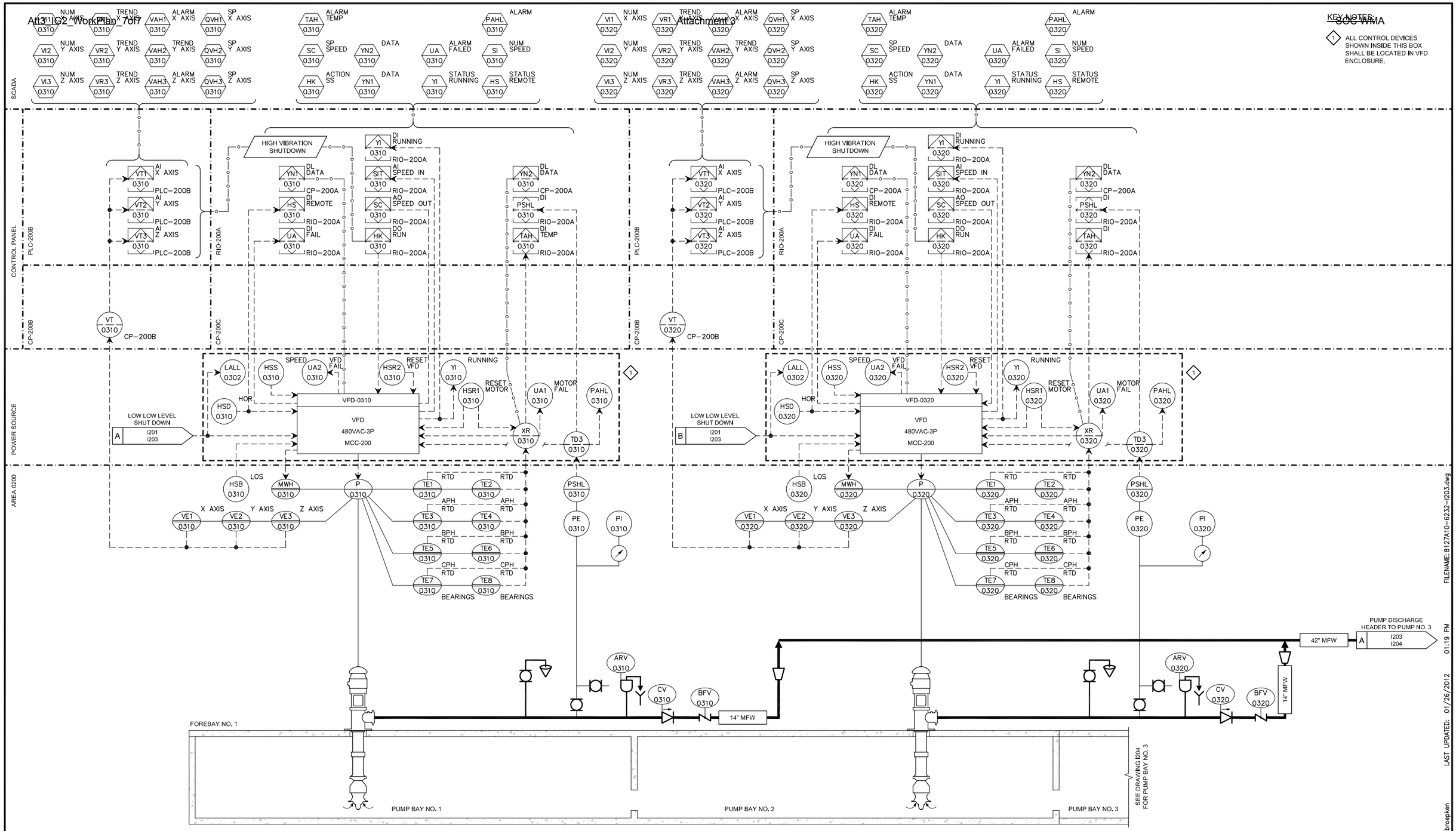

EQUIPMENT TAG NUMBERS ON THIS DRAWING ARE PRECEDED W/ **02-MFW-** UNLESS OTHERWISE LABELED

No.	DATE	REVISIONS	APPROVED

DESIGNED: MGH
DRAWN: DKI
CHECKED: TAH

RBF CONSULTING
carollo
IRVINE RANCH WATER DISTRICT

JIM MEYERHOFER	RCE NO. 48451	PROJECT MANAGER	DATE
CINDY MILLER	RCE NO. 58116	PROJECT MANAGER	DATE
PATRICIA UEMATSU	RCE NO. 36762	PRINCIPAL ENGINEER	DATE

IRVINE RANCH WATER DISTRICT
BAKER WATER TREATMENT PLANT
PROJECT NO. 11218

P&ID
FEED WATER PUMP STATION-1

DRAWING I203
SHEET 587 OF 632

FILENAME:8127A10-6232-I203.dwg
LAST UPDATED: 01/26/2012 01:19 PM
LAST SAVED BY: broepken

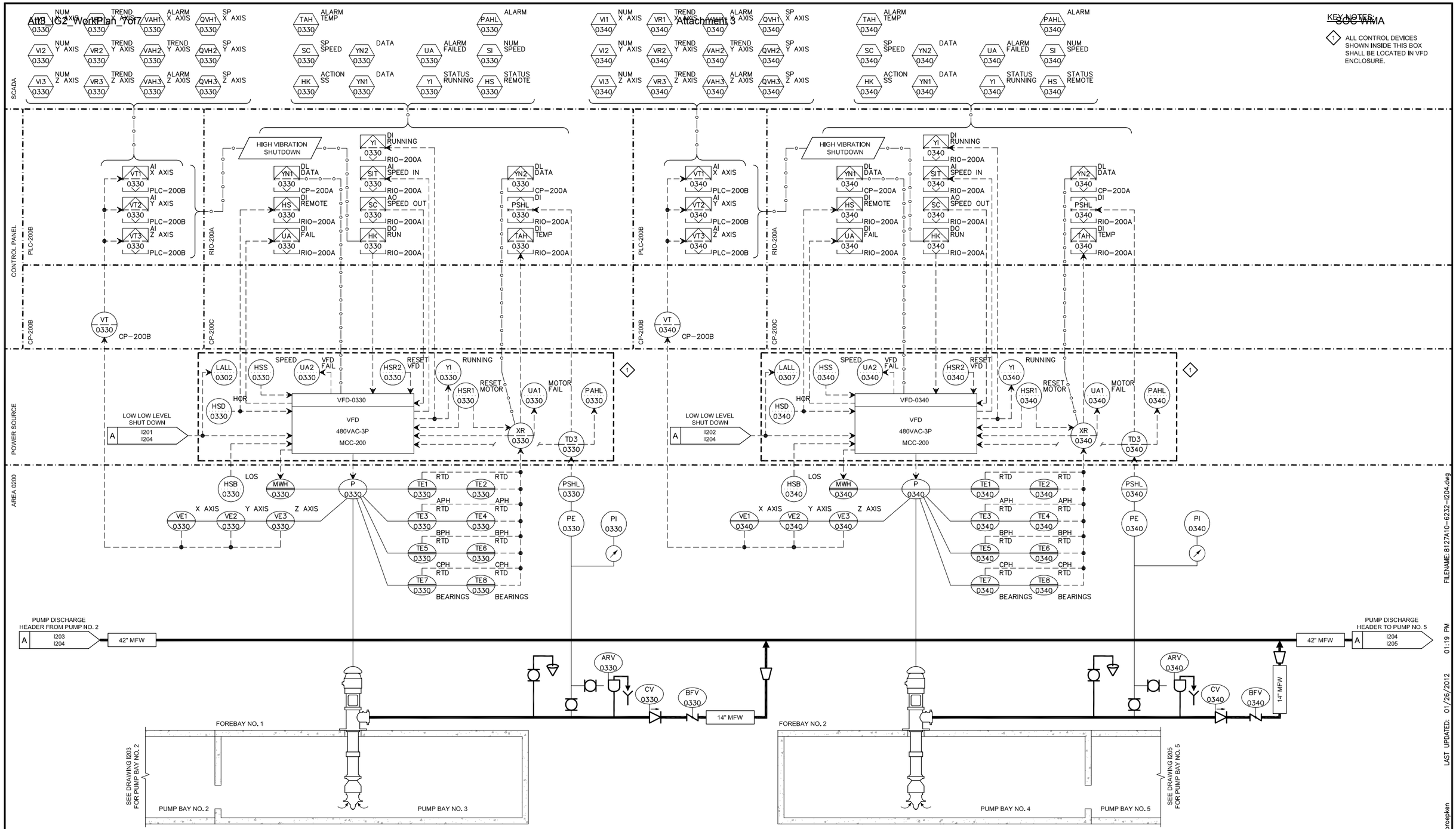

KEY NOTES:

1. ALL CONTROL DEVICES SHOWN INSIDE THIS BOX SHALL BE LOCATED IN VFD ENCLOSURE.

P-0330
FEED WATER PUMP NO. 3
300HP 480VAC 3PH
4900 GPM @ 140 FT TDH
1 / E215

PE-0330
PRESSURE SWITCH HIGH-LOW
5 PSIG AND 60 PSIG OPEN
NP147 / TYP

PI-0330
PRESSURE INDICATOR
0-60 PSIG

P-0340
FEED WATER PUMP NO. 4
300HP 480VAC 3PH
4900 GPM @ 140 FT TDH
1 / E215

PE-0340
PRESSURE SWITCH HIGH-LOW
5 PSIG AND 60 PSIG OPEN
NP147 / TYP

PI-0340
PRESSURE INDICATOR
0-60 PSIG

EQUIPMENT TAG NUMBERS ON THIS DRAWING ARE PRECEDED W/ **02-MFW-** UNLESS OTHERWISE LABELED

No.	DATE	REVISIONS	APPROVED

DESIGNED: MGH
DRAWN: DKI
CHECKED: TAH

RBF CONSULTING
carollo
IRVINE RANCH WATER DISTRICT

JIM MEYERHOFER	RCE NO. 48451	PROJECT MANAGER	DATE
CINDY MILLER	RCE NO. 58116	PROJECT MANAGER	DATE
PATRICIA UEMATSU	RCE NO. 36762	PRINCIPAL ENGINEER	DATE

IRVINE RANCH WATER DISTRICT
BAKER WATER TREATMENT PLANT
PROJECT NO. 11218

P&ID
FEED WATER PUMP STATION-2

DRAWING I204
SHEET 588 OF 632

FILENAME: 8127A10-6232-I204.dwg
LAST UPDATED: 01/26/2012 01:19 PM
LAST SAVED BY: broepken

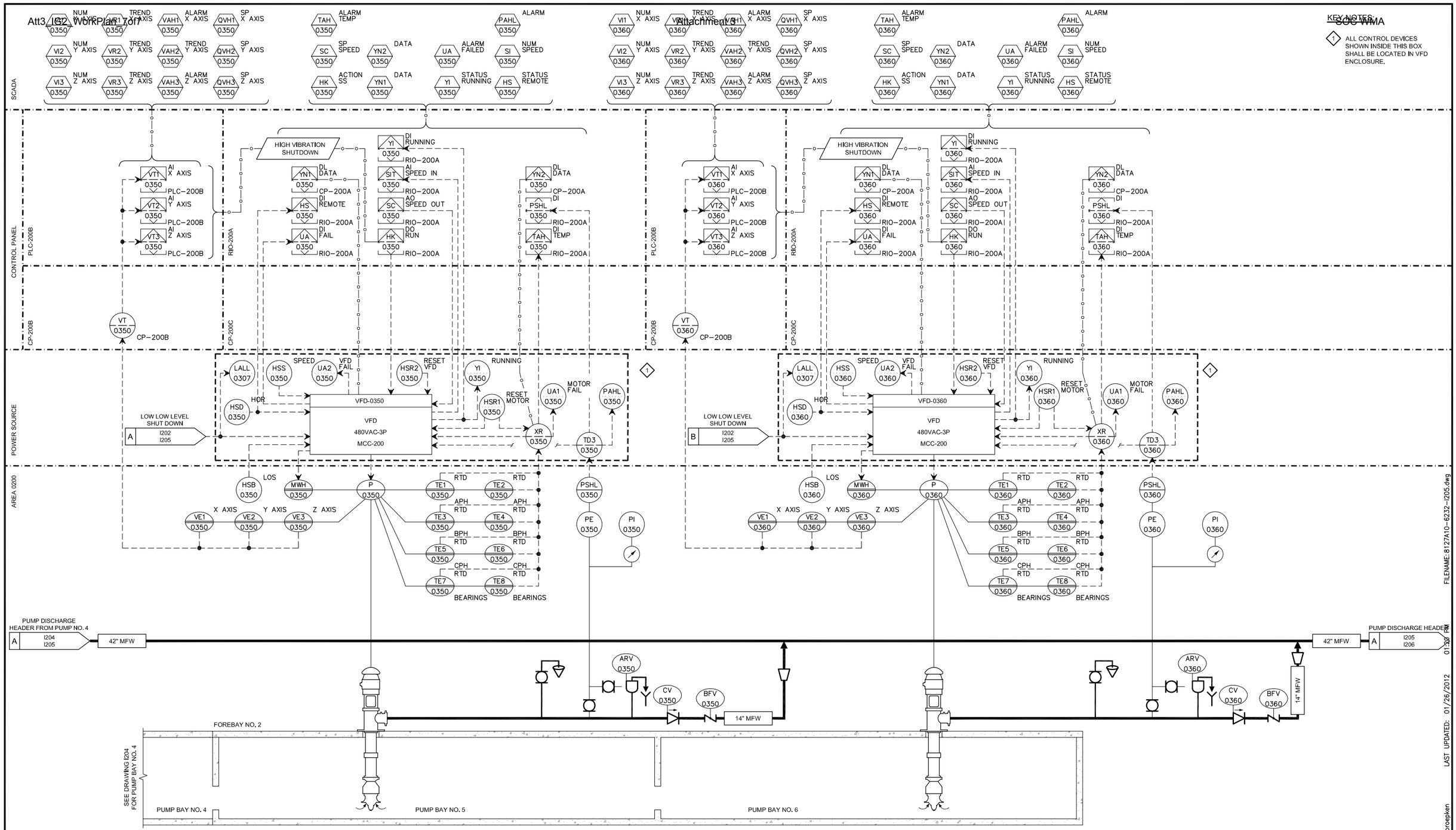

EQUIPMENT TAG NUMBERS ON THIS DRAWING ARE PRECEDED W/ 02-MFW- UNLESS OTHERWISE LABELED

No.	DATE	REVISIONS	APPROVED

DESIGNED: MGH
DRAWN: DKI
CHECKED: TAH

RBF CONSULTING

carollo

IRVINE RANCH WATER DISTRICT

JIM MEYERHOFER	RCE NO. 48451	PROJECT MANAGER	DATE
CINDY MILLER	RCE NO. 58116	PROJECT MANAGER	DATE
PATRICIA UEMATSU	RCE NO. 36762	PRINCIPAL ENGINEER	DATE

IRVINE RANCH WATER DISTRICT
BAKER WATER TREATMENT PLANT
PROJECT NO. 11218

P&ID
FEED WATER PUMP STATION-3

DRAWING I205
SHEET 589 OF 632

FILENAME: 8127A10-6232-I205.dwg
LAST UPDATED: 01/26/2012 01:20 PM
LAST SAVED BY: broepken

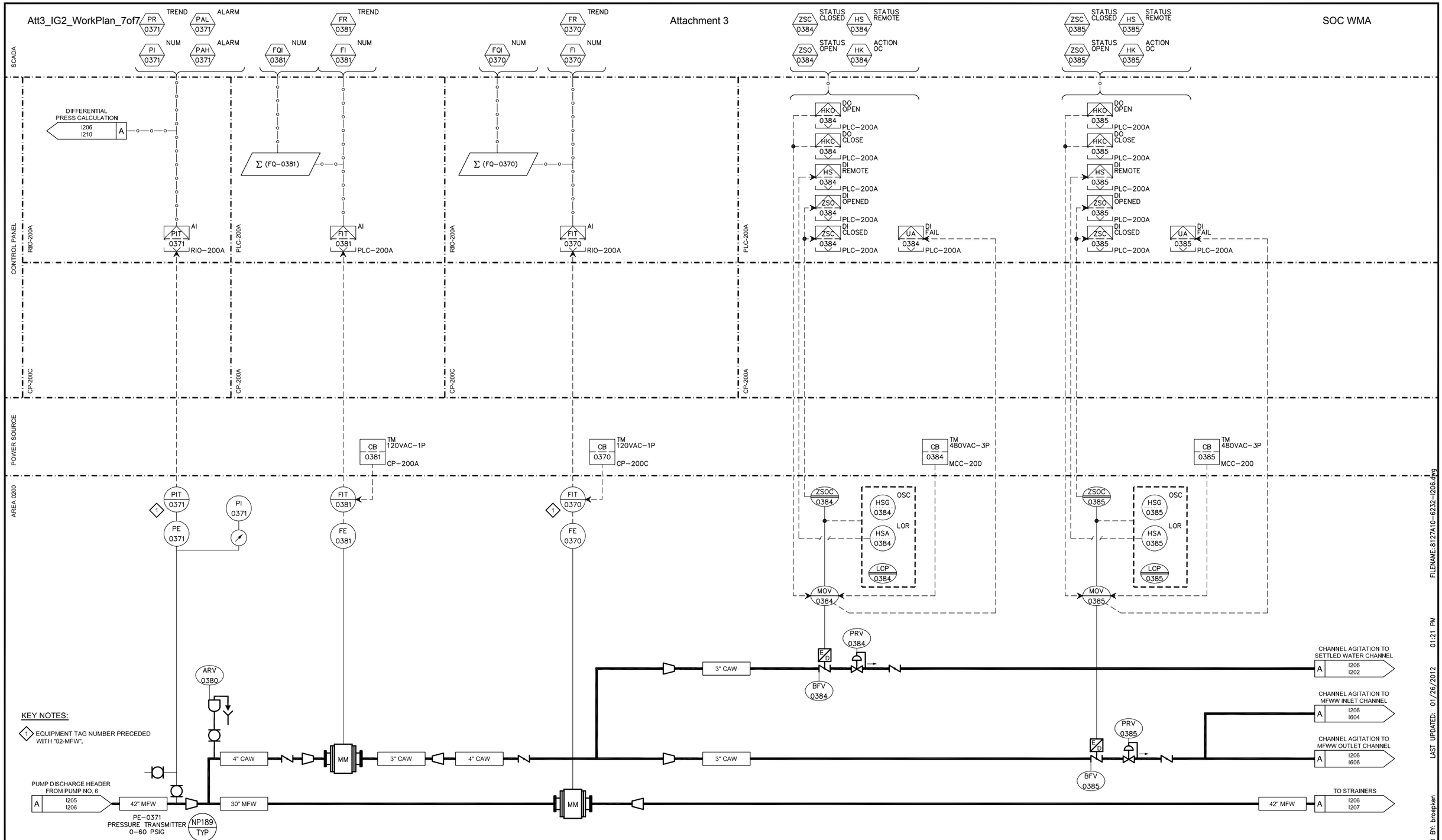

No.	DATE	REVISIONS	APPROVED

DESIGNED: MGH
DRAWN: DKI
CHECKED: TAH

RBF CONSULTING
carollo
IRVINE RANCH WATER DISTRICT

JIM MEYERHOFER	RCE NO. 48451	PROJECT MANAGER	DATE
CINDY MILLER	RCE NO. 58116	PROJECT MANAGER	DATE
PATRICIA UEMATSU	RCE NO. 36762	PRINCIPAL ENGINEER	DATE

IRVINE RANCH WATER DISTRICT
BAKER WATER TREATMENT PLANT
PROJECT NO. 11218

P&ID
FEED WATER PUMP STATION-4

DRAWING I206

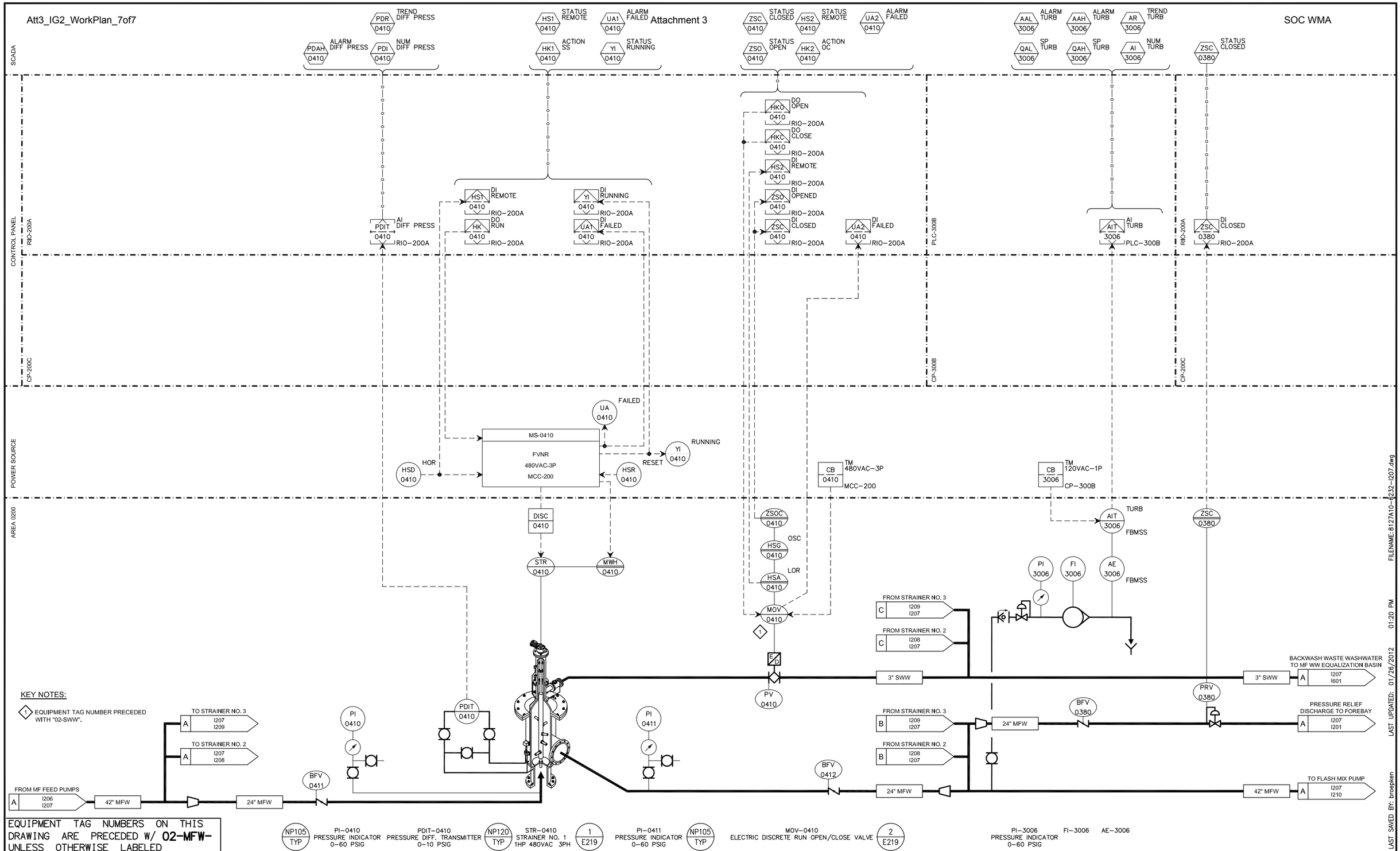

No.	DATE	REVISIONS	APPROVED

DESIGNED: MGH
DRAWN: DKI
CHECKED: TAH

RBF CONSULTING

carollo

IRVINE RANCH WATER DISTRICT

JIM MEYERHOFER	RCE NO. 48451	PROJECT MANAGER	DATE
CINDY MILLER	RCE NO. 58116	PROJECT MANAGER	DATE
PATRICIA UEMATSU	RCE NO. 36762	PRINCIPAL ENGINEER	DATE

IRVINE RANCH WATER DISTRICT
BAKER WATER TREATMENT PLANT
PROJECT NO. 11218

P&ID
STRAINERS-1

DRAWING I207

SHEET 591 OF 632

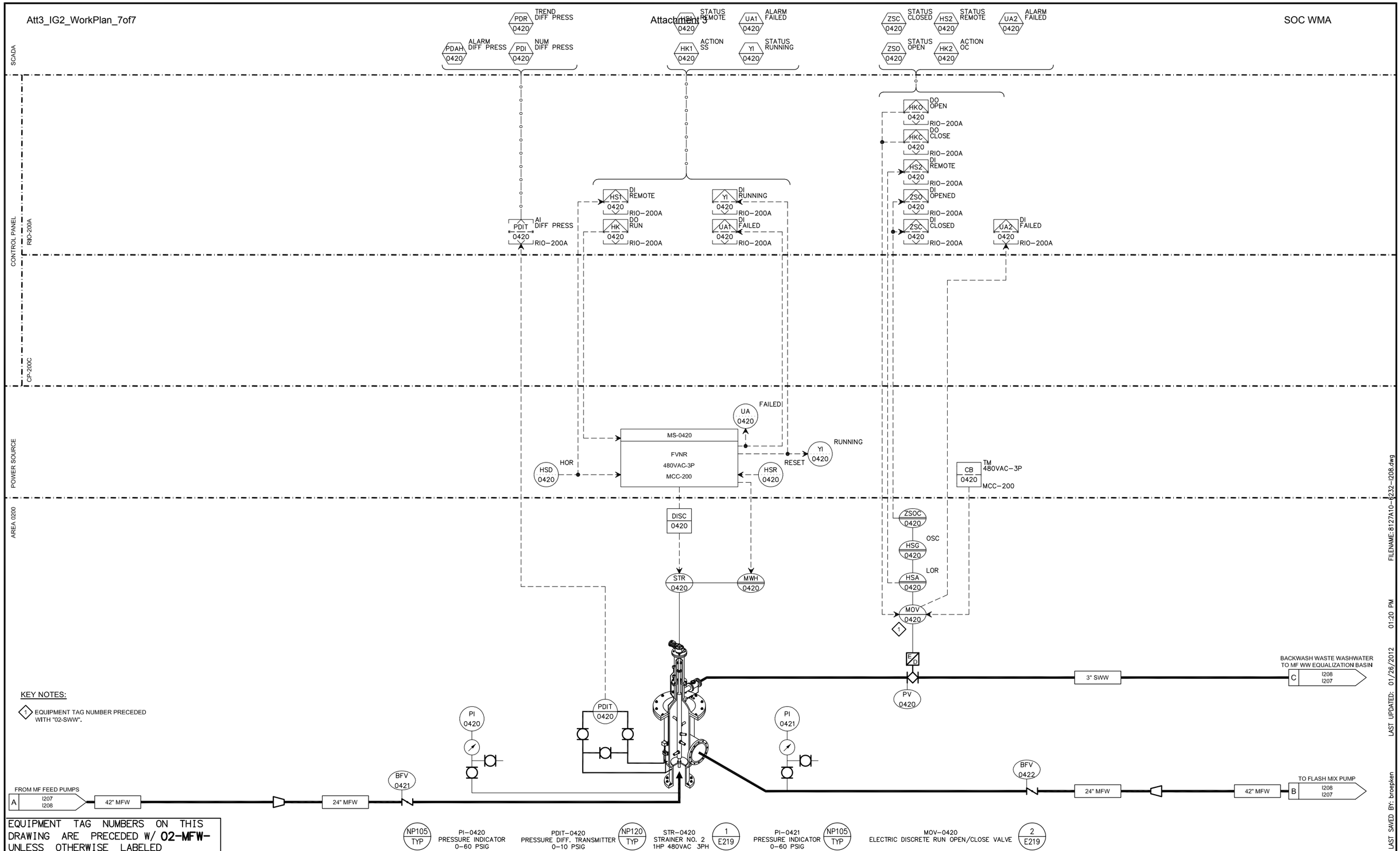

No.	DATE	REVISIONS	APPROVED

DESIGNED: MGH
DRAWN: DKI
CHECKED: TAH

RBF CONSULTING

carollo

IRVINE RANCH WATER DISTRICT

JIM MEYERHOFER	RCE NO. 48451	PROJECT MANAGER	DATE
CINDY MILLER	RCE NO. 58116	PROJECT MANAGER	DATE
PATRICIA UEMATSU	RCE NO. 36762	PRINCIPAL ENGINEER	DATE

IRVINE RANCH WATER DISTRICT
BAKER WATER TREATMENT PLANT
PROJECT NO. 11218

P&ID
STRAINERS-2

DRAWING I208

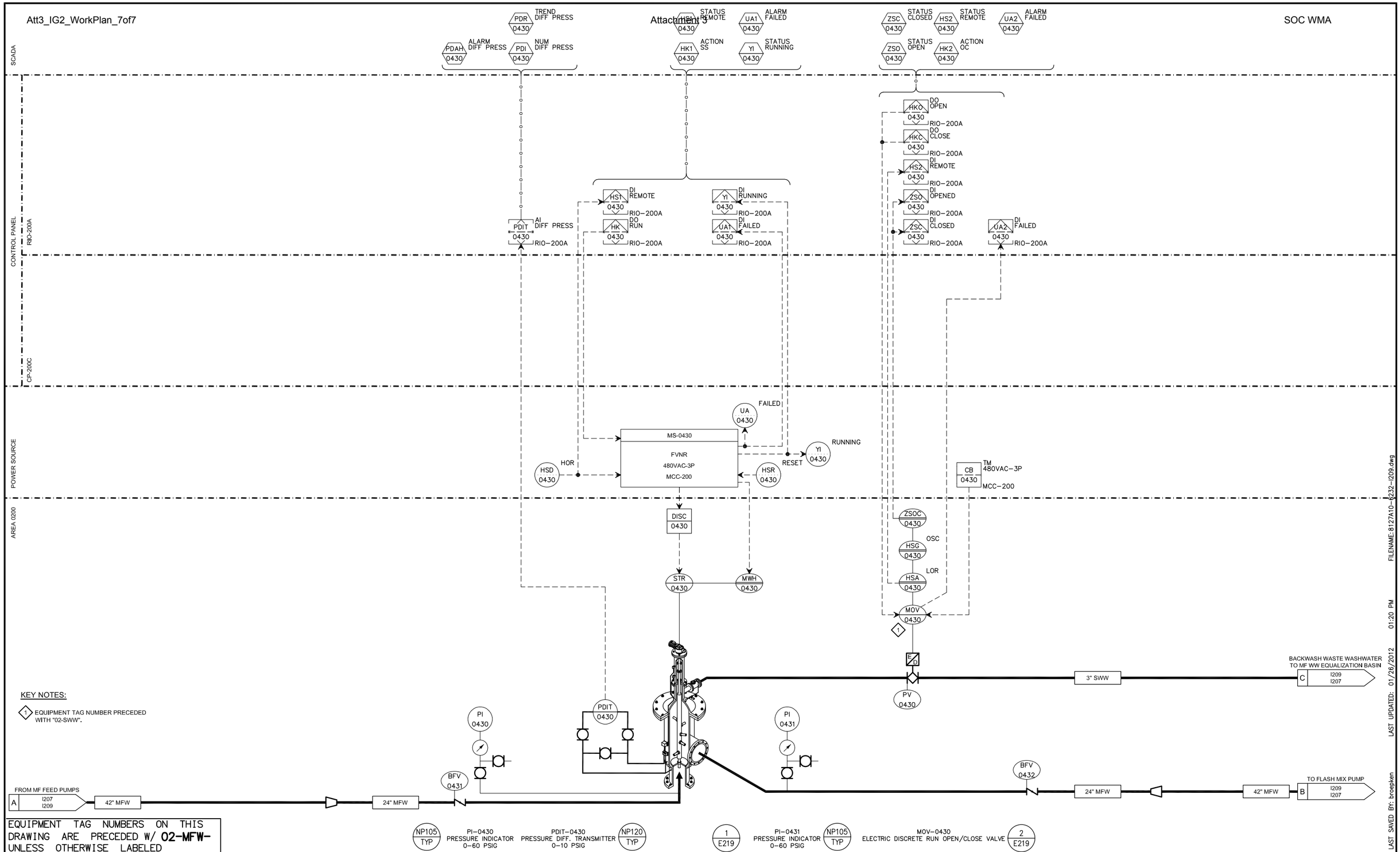

No.	DATE	REVISIONS	APPROVED

DESIGNED: MGH
DRAWN: DKI
CHECKED: TAH

RBF CONSULTING

carollo

IRVINE RANCH WATER DISTRICT

JIM MEYERHOFER	RCE NO. 48451	PROJECT MANAGER	DATE
CINDY MILLER	RCE NO. 58116	PROJECT MANAGER	DATE
PATRICIA UEMATSU	RCE NO. 36762	PRINCIPAL ENGINEER	DATE

IRVINE RANCH WATER DISTRICT
BAKER WATER TREATMENT PLANT
PROJECT NO. 11218

P&ID
STRAINERS-3

DRAWING I209

SHEET 593 OF 632

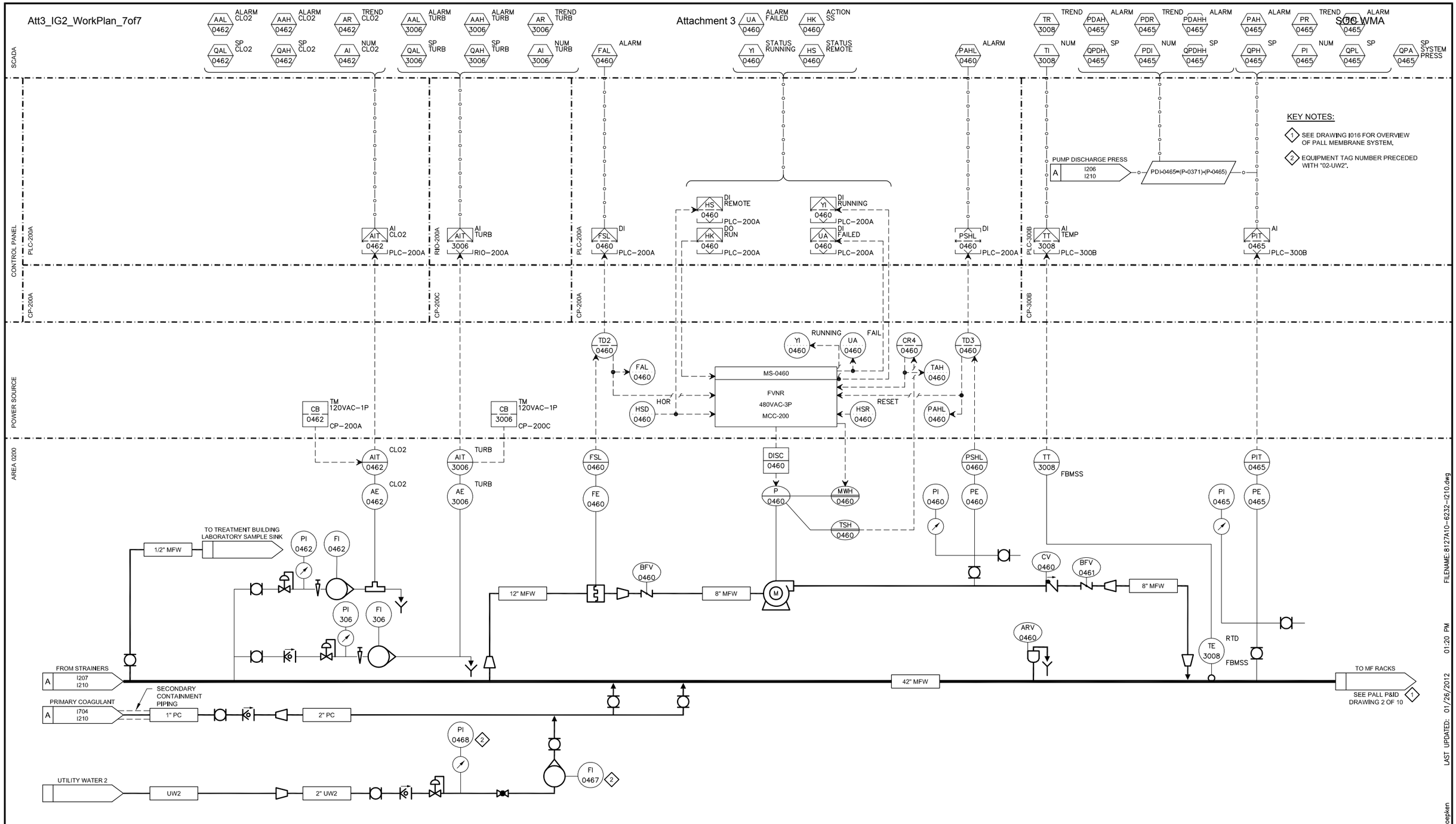

PI-0462 PRESSURE INDICATOR 0-100 PSIG

FI-0462 ROTAMETER 0-1.0 GPM

AE-0462 CLO2 ANALYZER 0-2 mg/L — 1 / I023

AE-3006 TURB ANALYZER 0-10NTU

PI-0468 PRESSURE INDICATOR 0-100 PSIG

FI-0467 ROTAMETER 0-50 GPM

FE-0460 THERMAL FLOW SWITCH 500 GPM OPEN — NF111 / TYP

P-0460 FLASH MIX PUMP 20HP 480VAC 3PH 1100 GPM @ 35 FT TDH — 1 / E218

PI-0460 PRESSURE INDICATOR 0-100 PSIG

PE-0460 PRESSURE SWITCH HIGH-LOW 5 PSIG OPEN AND 80 PSIG OPEN — NP147 / TYP

PI-0465 PRESSURE INDICATOR 0-100 PSIG

PE-0465 PRESSURE TRANSMITTER 0-100 PSIG — NP189 / TYP

EQUIPMENT TAG NUMBERS ON THIS DRAWING ARE PRECEDED W/ **02-MFW-** UNLESS OTHERWISE LABELED

No.	DATE	REVISIONS	APPROVED

DESIGNED: MGH
DRAWN: TLF
CHECKED: TAH

RBF CONSULTING

carollo

IRVINE RANCH WATER DISTRICT

JIM MEYERHOFER	RCE NO. 48451	PROJECT MANAGER	DATE
CINDY MILLER	RCE NO. 58116	PROJECT MANAGER	DATE
PATRICIA UEMATSU	RCE NO. 36762	PRINCIPAL ENGINEER	DATE

IRVINE RANCH WATER DISTRICT
BAKER WATER TREATMENT PLANT
PROJECT NO. 11218

P&ID
FLASH MIX

DRAWING I210

SHEET 594 OF 632

FILENAME: 8127A10-6232-I210.dwg
LAST UPDATED: 01/26/2012 01:20 PM
LAST SAVED BY: broepken

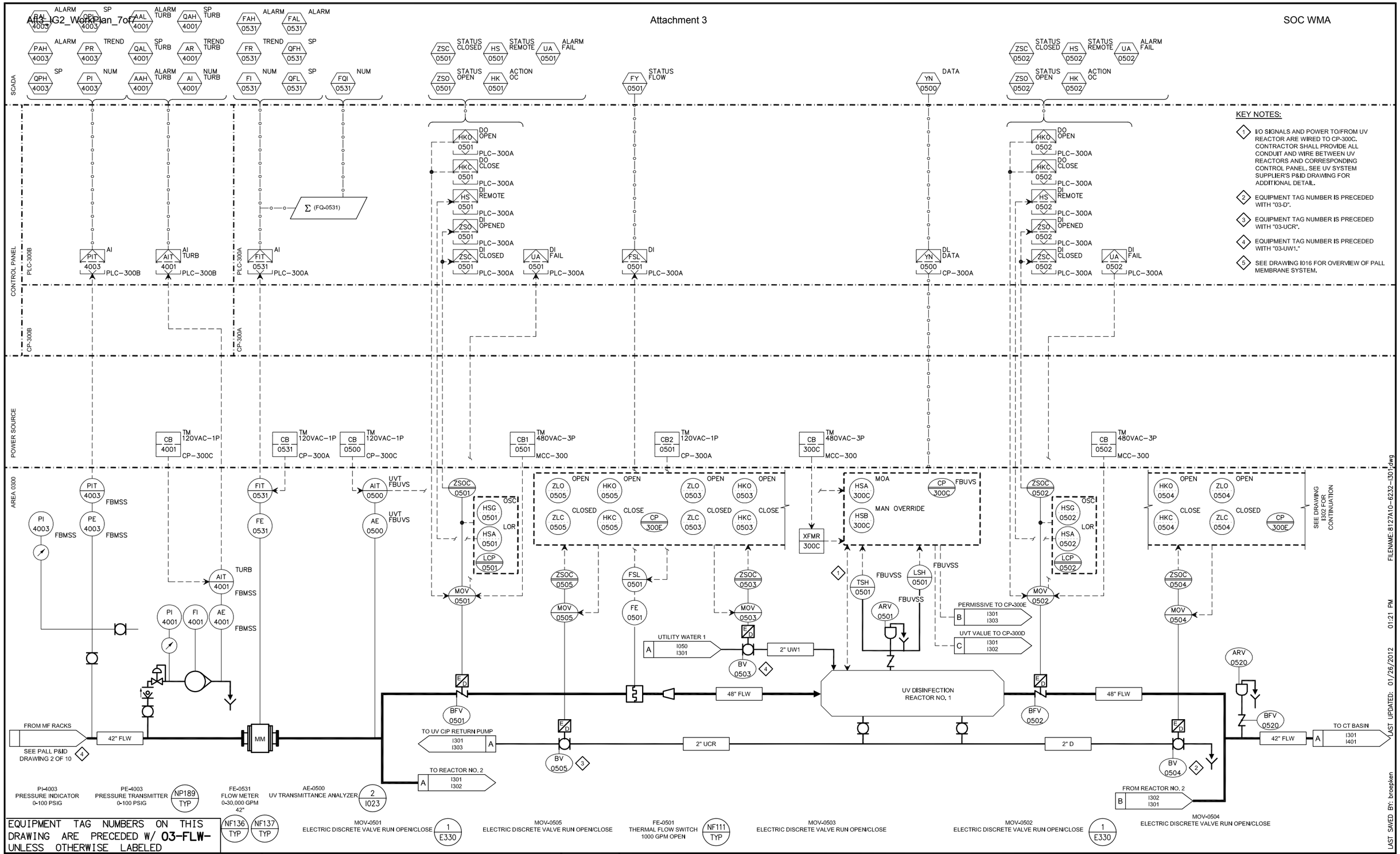

No.	DATE	REVISIONS	APPROVED

DESIGNED: MGH
DRAWN: TLF
CHECKED: TAH

RBF CONSULTING
carollo
Integrated 3 IRVINE RANCH WATER DISTRICT

JIM MEYERHOFER	RCE NO. 48451	PROJECT MANAGER	DATE
CINDY MILLER	RCE NO. 58116	PROJECT MANAGER	DATE
PATRICIA UEMATSU	RCE NO. 36762	PRINCIPAL ENGINEER	DATE

IRVINE RANCH WATER DISTRICT
BAKER WATER TREATMENT PLANT
PROJECT NO. 11218

P&ID
UV DISINFECTION
REACTOR NO. 1

DRAWING I301
SHEET 595 OF 632

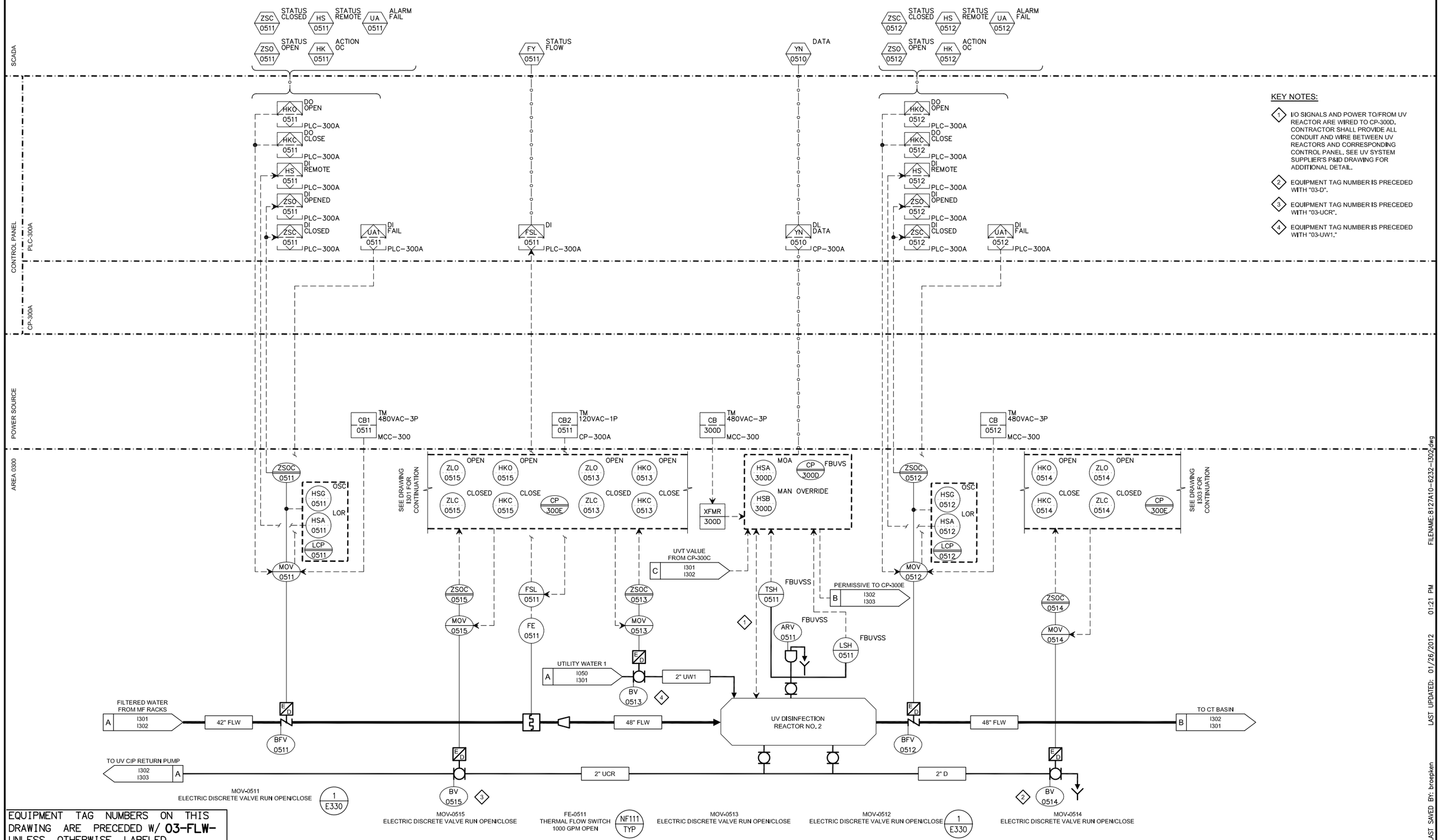

KEY NOTES:

1. I/O SIGNALS AND POWER TO/FROM UV REACTOR ARE WIRED TO CP-300D. CONTRACTOR SHALL PROVIDE ALL CONDUIT AND WIRE BETWEEN UV REACTORS AND CORRESPONDING CONTROL PANEL. SEE UV SYSTEM SUPPLIER'S P&ID DRAWING FOR ADDITIONAL DETAIL.
2. EQUIPMENT TAG NUMBER IS PRECEDED WITH "03-D".
3. EQUIPMENT TAG NUMBER IS PRECEDED WITH "03-UCR".
4. EQUIPMENT TAG NUMBER IS PRECEDED WITH "03-UW1."

EQUIPMENT TAG NUMBERS ON THIS DRAWING ARE PRECEDED W/ 03-FLW- UNLESS OTHERWISE LABELED

No.	DATE	REVISIONS	APPROVED

DESIGNED: MGH
DRAWN: TLF
CHECKED: TAH

RBF CONSULTING

carollo

IRVINE RANCH WATER DISTRICT

JIM MEYERHOFER	RCE NO. 48451	PROJECT MANAGER	DATE
CINDY MILLER	RCE NO. 58116	PROJECT MANAGER	DATE
PATRICIA UEMATSU	RCE NO. 36762	PRINCIPAL ENGINEER	DATE

IRVINE RANCH WATER DISTRICT
BAKER WATER TREATMENT PLANT
PROJECT NO. 11218

P&ID
UV DISINFECTION REACTOR NO. 2

DRAWING I302

SHEET 596 OF 632

FILENAME:8127A10-6232-I302.dwg
LAST UPDATED: 01/26/2012 01:21 PM
LAST SAVED BY: broepken

SCADA

CONTROL PANEL

PLC-300A

CP-300A

POWER SOURCE

AREA 0300

KEY NOTES:

1. EQUIPMENT TAG NUMBER IS PRECEDED WITH "03-UCR".

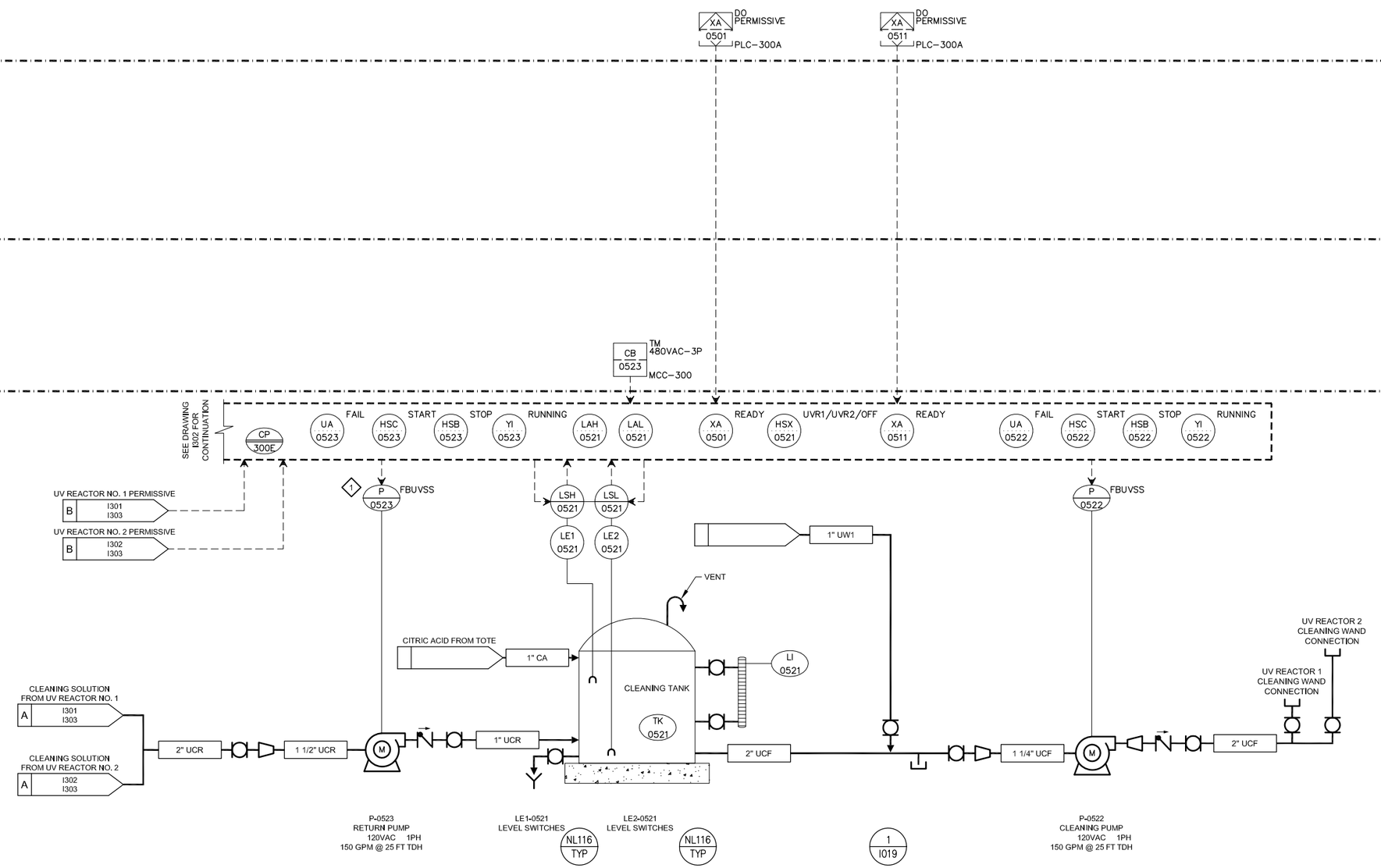

EQUIPMENT TAG NUMBERS ON THIS DRAWING ARE PRECEDED W/ **03-UCF-** UNLESS OTHERWISE LABELED

No.	DATE	REVISIONS	APPROVED

DESIGNED: MGH
DRAWN: TLF
CHECKED: TAH

RBF CONSULTING

carollo

IRVINE RANCH WATER DISTRICT

JIM MEYERHOFER	RCE NO. 48451	PROJECT MANAGER	DATE
CINDY MILLER	RCE NO. 58116	PROJECT MANAGER	DATE
PATRICIA UEMATSU	RCE NO. 36762	PRINCIPAL ENGINEER	DATE

IRVINE RANCH WATER DISTRICT
BAKER WATER TREATMENT PLANT
PROJECT NO. 11218

P&ID
UV DISINFECTION
REACTORS CIP SYSTEM

DRAWING I303

SHEET 597 OF 632

FILENAME: 8127A10-8232-I303.dwg
LAST UPDATED: 01/26/2012 01:21 PM
LAST SAVED BY: broepken

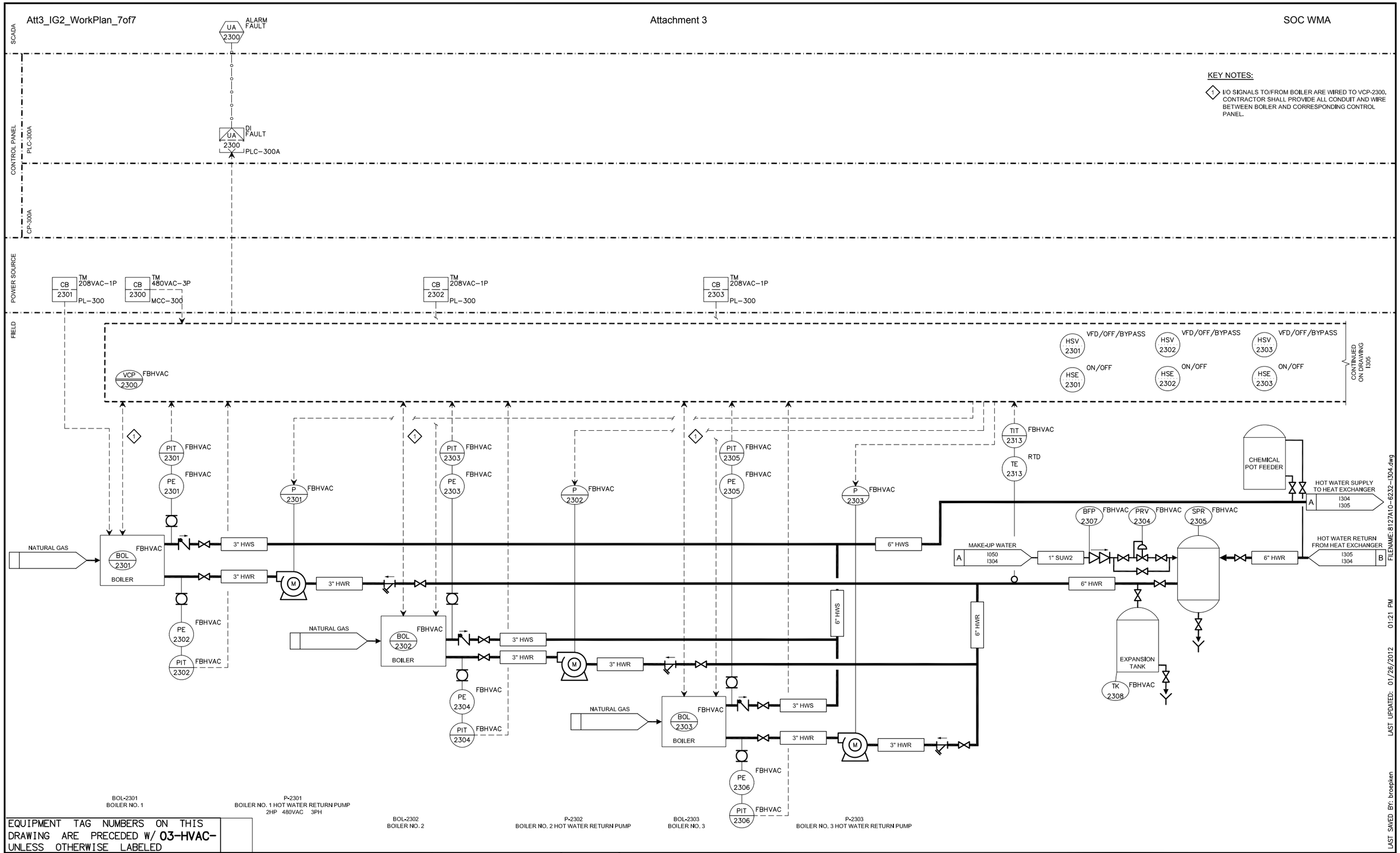

EQUIPMENT TAG NUMBERS ON THIS DRAWING ARE PRECEDED W/ **03-HVAC-** UNLESS OTHERWISE LABELED

No.	DATE	REVISIONS	APPROVED

DESIGNED: MGH
DRAWN: TLF
CHECKED: TAH

RBF CONSULTING

carollo

IRVINE RANCH WATER DISTRICT

JIM MEYERHOFER	RCE NO. 48451	PROJECT MANAGER	DATE
CINDY MILLER	RCE NO. 58116	PROJECT MANAGER	DATE
PATRICIA UEMATSU	RCE NO. 36762	PRINCIPAL ENGINEER	DATE

IRVINE RANCH WATER DISTRICT
BAKER WATER TREATMENT PLANT
PROJECT NO. 11218

P&ID
BOILER SYSTEM-1

DRAWING I304

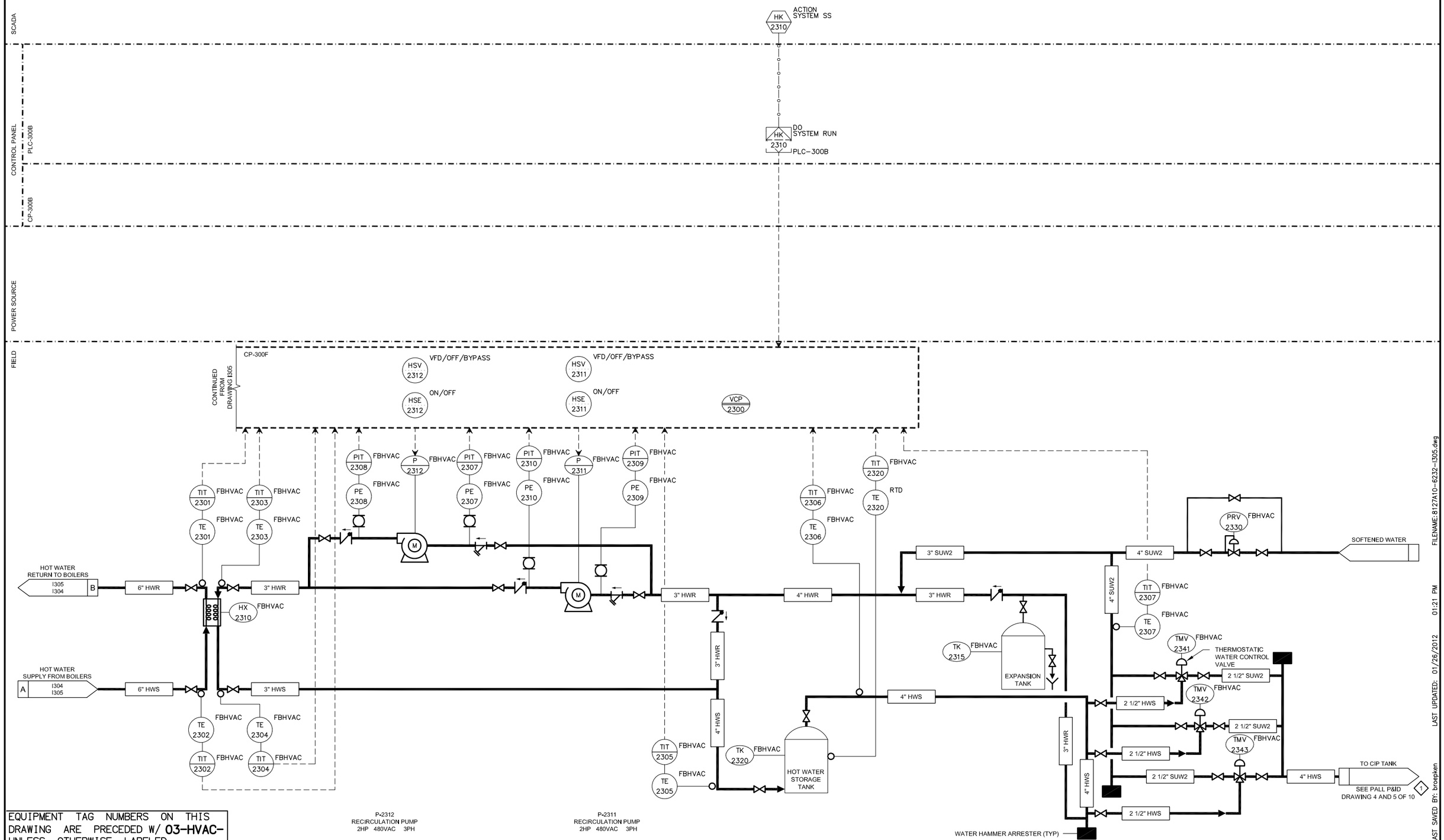

EQUIPMENT TAG NUMBERS ON THIS DRAWING ARE PRECEDED W/ **03-HVAC-** UNLESS OTHERWISE LABELED

No.	DATE	REVISIONS	APPROVED

DESIGNED: MGH
DRAWN: TLF
CHECKED: TAH

RBF CONSULTING

carollo

IRVINE RANCH WATER DISTRICT

JIM MEYERHOFER	RCE NO. 48451	PROJECT MANAGER	DATE
CINDY MILLER	RCE NO. 58116	PROJECT MANAGER	DATE
PATRICIA UEMATSU	RCE NO. 36762	PRINCIPAL ENGINEER	DATE

IRVINE RANCH WATER DISTRICT
BAKER WATER TREATMENT PLANT
PROJECT NO. 11218

P&ID
BOILER SYSTEM-2

DRAWING I305

SHEET 599 OF 632

FILENAME: 8127A10-6232-I305.dwg
LAST UPDATED: 01/26/2012 01:21 PM
LAST SAVED BY: broepken

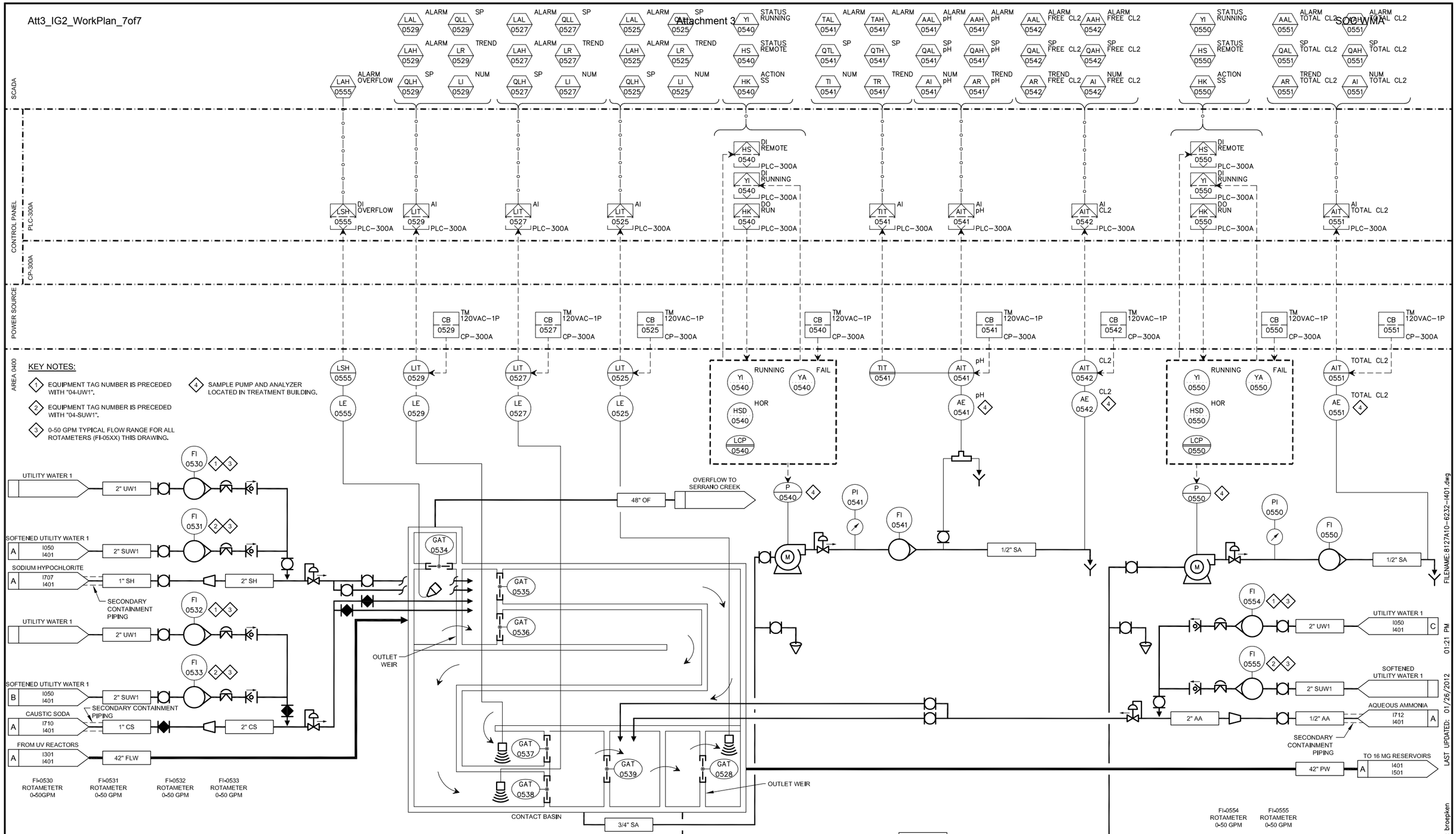

EQUIPMENT TAG NUMBERS ON THIS DRAWING ARE PRECEDED W/ **04-FLW-** UNLESS OTHERWISE LABELED

No.	DATE	REVISIONS	APPROVED

DESIGNED: MGH
DRAWN: TLF
CHECKED: TAH

RBF CONSULTING
carollo
IRVINE RANCH WATER DISTRICT

JIM MEYERHOFER	RCE NO. 48451	PROJECT MANAGER	DATE
CINDY MILLER	RCE NO. 58116	PROJECT MANAGER	DATE
PATRICIA UEMATSU	RCE NO. 36762	PRINCIPAL ENGINEER	DATE

IRVINE RANCH WATER DISTRICT
BAKER WATER TREATMENT PLANT
PROJECT NO. 11218

P&ID
CT BASIN

DRAWING I401
SHEET 600 OF 632

SOC WMA

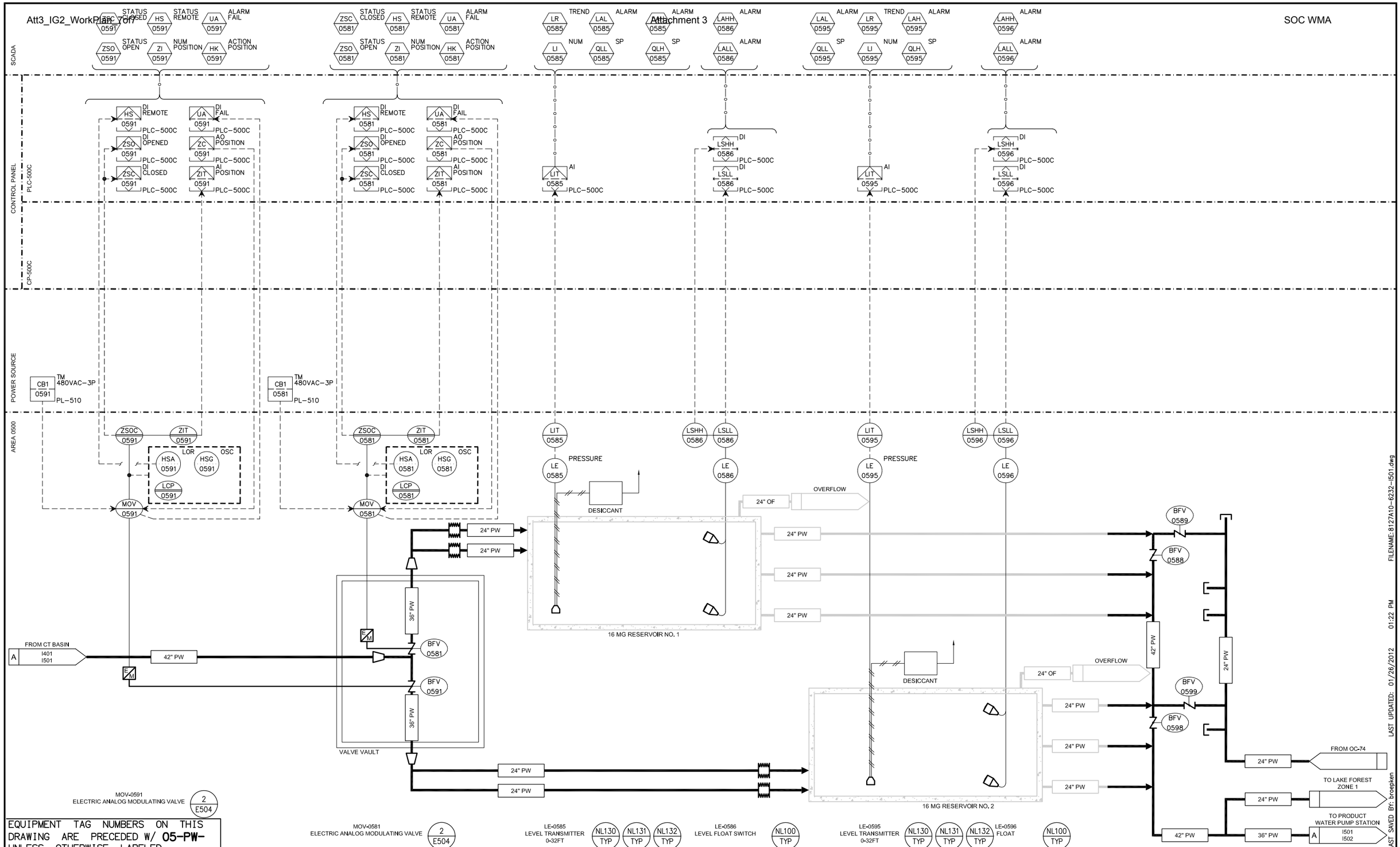

EQUIPMENT TAG NUMBERS ON THIS DRAWING ARE PRECEDED W/ **05-PW-** UNLESS OTHERWISE LABELED

No.	DATE	REVISIONS	APPROVED

DESIGNED: MGH
DRAWN: TLF
CHECKED: TAH

RBF CONSULTING
carollo
IRVINE RANCH WATER DISTRICT

JIM MEYERHOFER	RCE NO. 48451	PROJECT MANAGER	DATE
CINDY MILLER	RCE NO. 58116	PROJECT MANAGER	DATE
PATRICIA UEMATSU	RCE NO. 36762	PRINCIPAL ENGINEER	DATE

IRVINE RANCH WATER DISTRICT
BAKER WATER TREATMENT PLANT
PROJECT NO. 11218

P&ID
STORAGE RESERVOIRS

DRAWING
I501
SHEET
601 OF 632

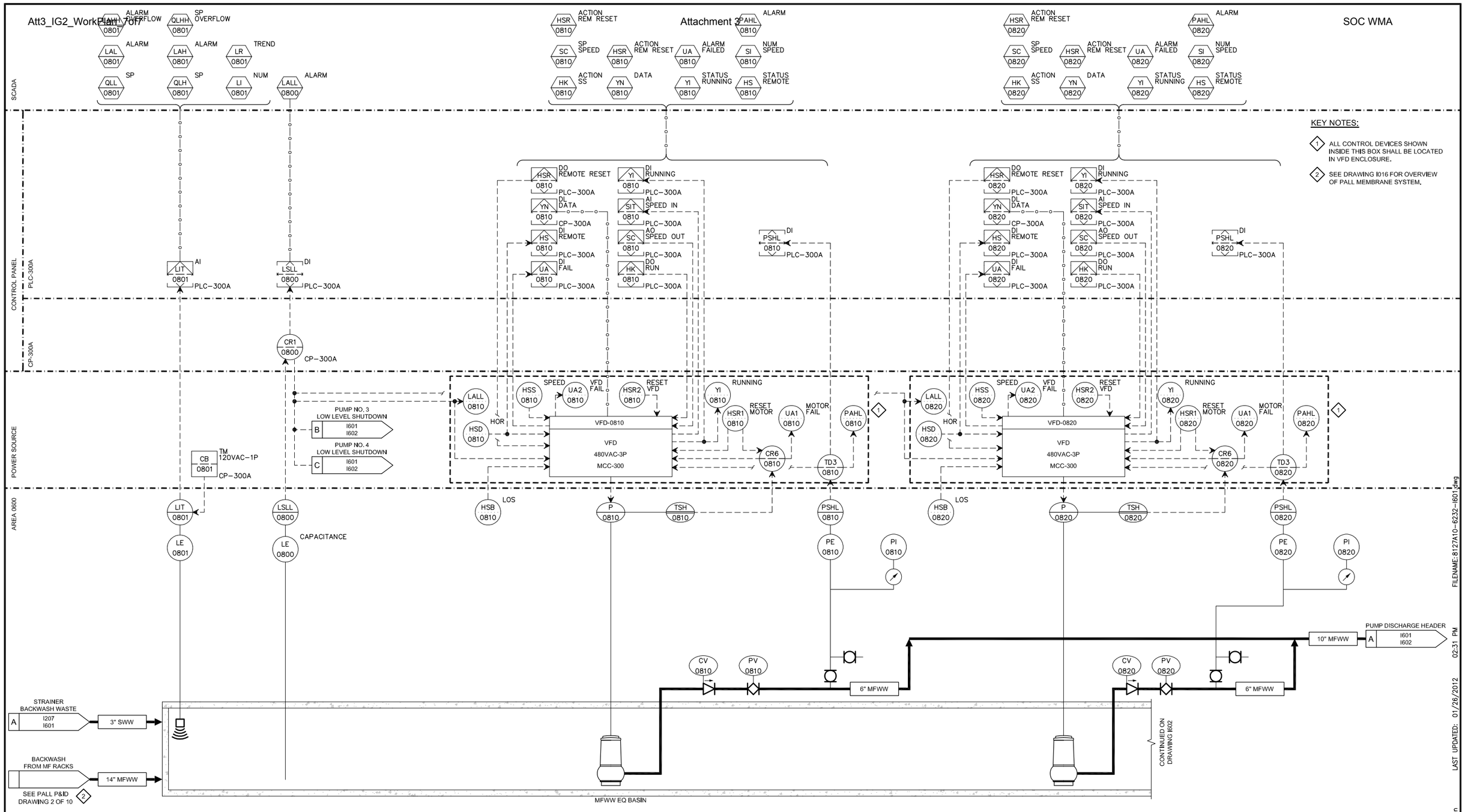

NL140 TYP — LE-0801 ULTRASONIC LEVEL METER 0-12 FT

LE-0800 LEVEL CAPACITANCE SWITCH LOW LOW — NL117 TYP

P-0810 MFWW TRANSFER PUMP NO. 1 10HP 480VAC 3PH 560 GPM @ 25 FT TDH — 1 E329

PE-0810 PRESSURE SWITCH HIGH-LOW 1 PSIG AND 10 PSIG OPEN — NP147 TYP

PI-0810 PRESSURE INDICATOR 0-20 PSIG

P-0820 MFWW TRANSFER PUMP NO. 2 10HP 480VAC 3PH 560 GPM @ 25 FT TDH — 1 E329

PE-0820 PRESSURE SWITCH HIGH-LOW 1 PSIG AND 10 PSIG OPEN — NP147 TYP

PI-0820 PRESSURE INDICATOR 0-20 PSIG

EQUIPMENT TAG NUMBERS ON THIS DRAWING ARE PRECEDED W/ **06-MFWW-** UNLESS OTHERWISE LABELED

No.	DATE	REVISIONS	APPROVED

DESIGNED: MGH
DRAWN: TLF
CHECKED: TAH

RBF CONSULTING — carollo — IRVINE RANCH WATER DISTRICT

JIM MEYERHOFER	RCE NO. 48451	PROJECT MANAGER	DATE
CINDY MILLER	RCE NO. 58116	PROJECT MANAGER	DATE
PATRICIA UEMATSU	RCE NO. 36762	PRINCIPAL ENGINEER	DATE

IRVINE RANCH WATER DISTRICT
BAKER WATER TREATMENT PLANT
PROJECT NO. 11218

P&ID
MF WASTE WASHWATER EQ BASIN-1

DRAWING I601
SHEET 606 OF 632

FILENAME: 8127A10-6232-I601.dwg
LAST UPDATED: 01/26/2012 02:31 PM
LAST SAVED BY: broepken

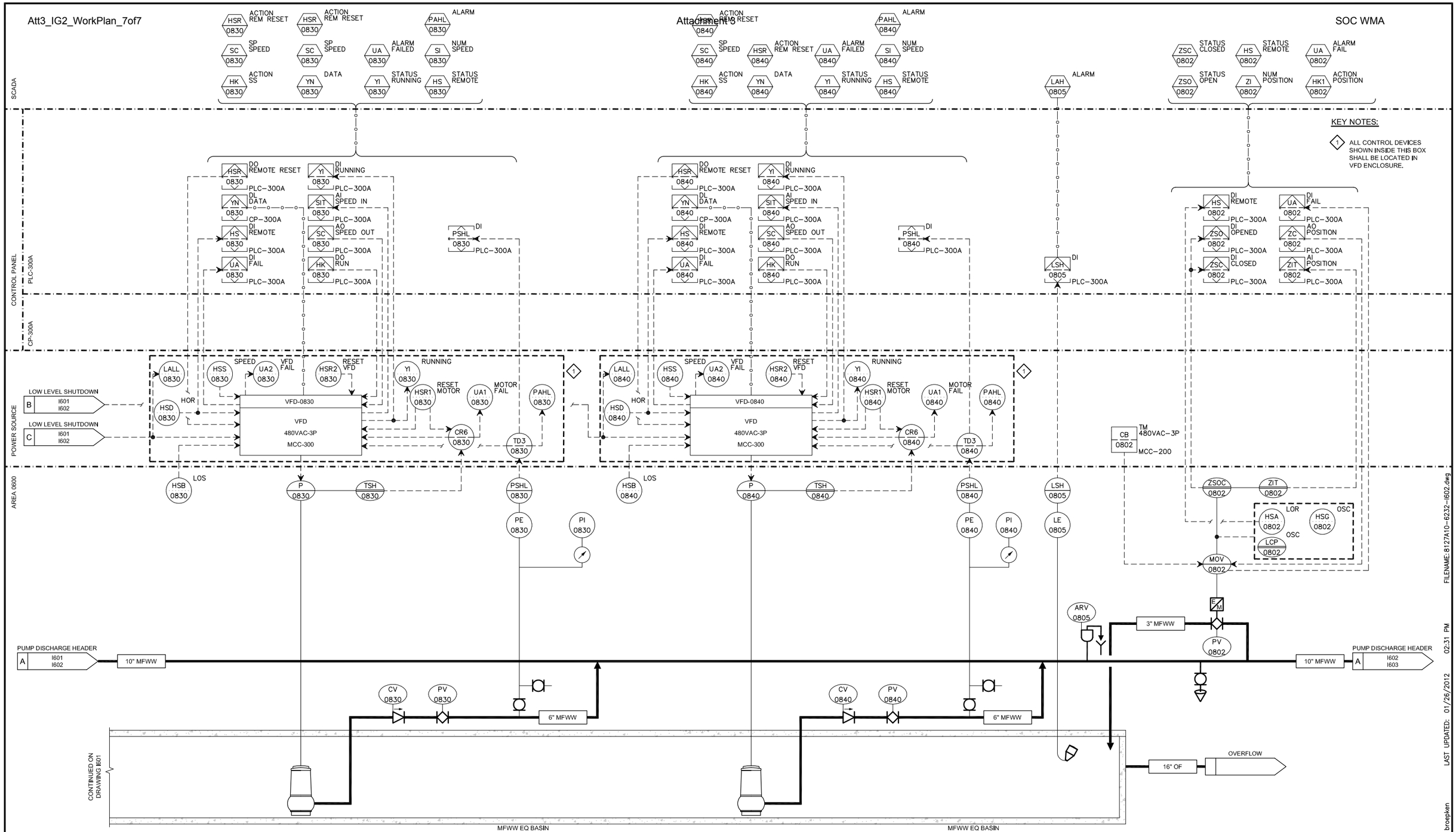

P-0830
MFWW TRANSFER PUMP NO. 3
10HP 480VAC 3PH
560 GPM @ 25 FT TDH
1 E329

PE-0830
PRESSURE SWITCH HIGH-LOW
1 PSIG AND 10 PSIG OPEN
NP147 TYP

PI-0830
PRESSURE INDICATOR
0-20 PSIG

P-0840
MFWW TRANSFER PUMP NO. 4
10HP 480VAC 3PH
560 GPM @ 25 FT TDH
1 E329

PE-0840
PRESSURE SWITCH HIGH-LOW
1 PSIG AND 10 PSIG OPEN
NP147 TYP

LE-0805
PRESSURE SWITCH HIGH-LOW
1 PSIG AND 10 PSIG OPEN

PI-0840
PRESSURE INDICATOR
0-20 PSIG

MOV-0802
ANALOG MODULATING VALVE
2 E322

EQUIPMENT TAG NUMBERS ON THIS DRAWING ARE PRECEDED W/ **06-MFWW-** UNLESS OTHERWISE LABELED

No.	DATE	REVISIONS	APPROVED

DESIGNED: MGH
DRAWN: TLF
CHECKED: TAH

RBF CONSULTING

carollo

IRVINE RANCH WATER DISTRICT

JIM MEYERHOFER	RCE NO. 48451	PROJECT MANAGER	DATE
CINDY MILLER	RCE NO. 58116	PROJECT MANAGER	DATE
PATRICIA UEMATSU	RCE NO. 36762	PRINCIPAL ENGINEER	DATE

IRVINE RANCH WATER DISTRICT
BAKER WATER TREATMENT PLANT
PROJECT NO. 11218

P&ID
MF WASTE WASHWATER EQ BASIN-2

DRAWING I602

SHEET **607** OF **632**

FILENAME: 8127A10-6232-I602.dwg
LAST UPDATED: 01/26/2012 02:31 PM
LAST SAVED BY: broepken

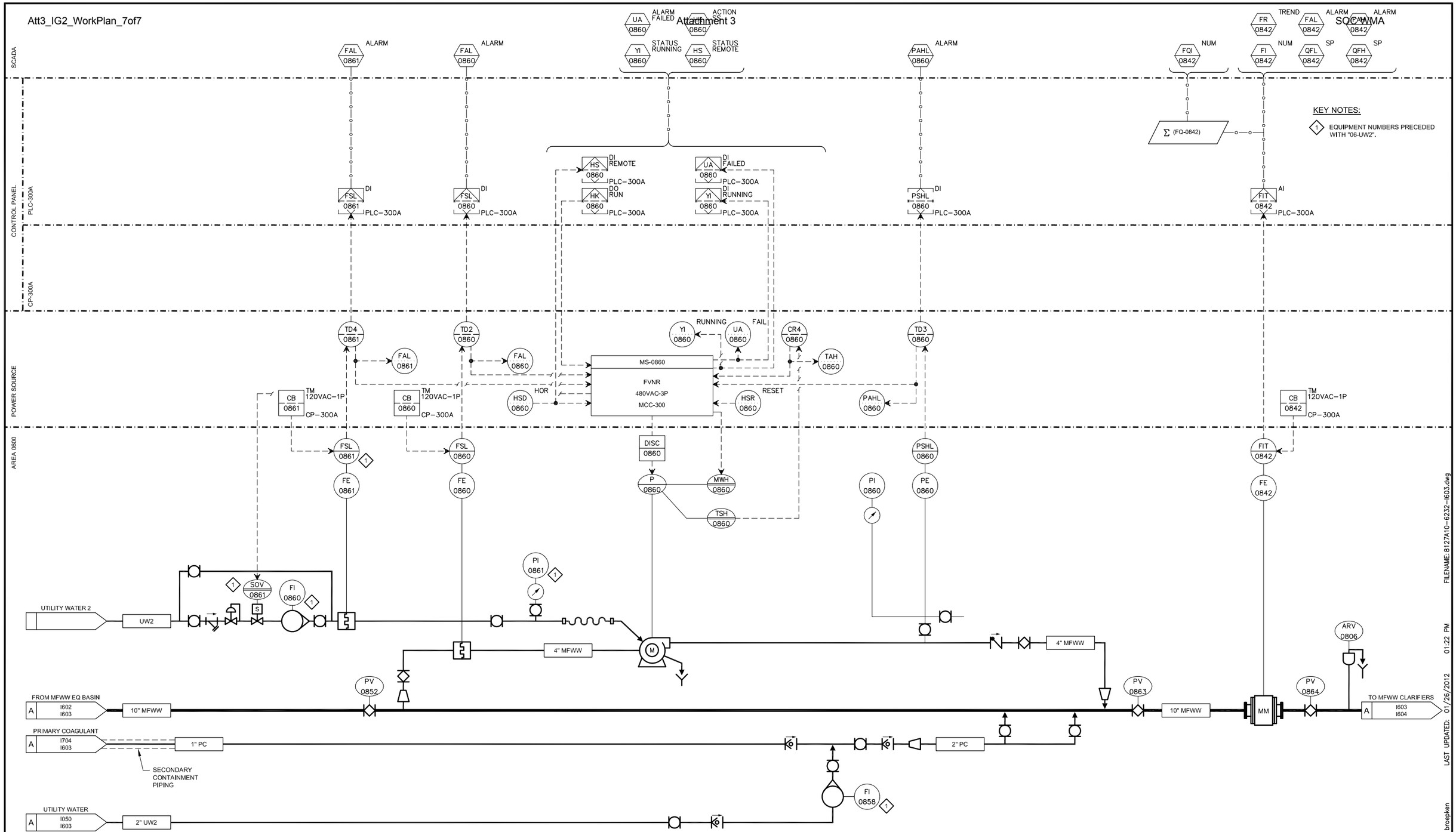

EQUIPMENT TAG NUMBERS ON THIS DRAWING ARE PRECEDED W/ **06-MFWW-** UNLESS OTHERWISE LABELED

FI-0860 ROTAMETER 0-10 GPM

FE-0861 THERMAL MASS FLOW SWITCH 0.5 GPM OPEN — NF111 TYP

FE-0860 THERMAL MASS FLOW SWITCH 75 GPM OPEN — NF111 TYP

PI-0861 PRESSURE INDICATOR 0-100 PSIG — NP105 TYP

P-0860 FLASH MIX PUMP 5HP 480VAC 1PH 150 GPM @ 25 FT TDH — 1 E328

FI-0858 ROTAMETER 0-100 GPM

PI-0860 PRESSURE INDICATOR 0-30 PSIG

PE-0860 PRESSURE SWITCH HIGH-LOW 5 PSIG AND 20 PSIG OPEN — NP147 TYP

FE-0842 MAGNETIC FLOW METER 0-2500 GPM 10" — NF136 TYP, NF137 TYP

LAST SAVED BY: broepken
LAST UPDATED: 01/26/2012 01:22 PM
FILENAME: 8127A10-6232-I603.dwg

No.	DATE	REVISIONS	APPROVED

DESIGNED: MGH
DRAWN: TLF
CHECKED: TAH

RBF CONSULTING
carollo
IRVINE RANCH WATER DISTRICT

JIM MEYERHOFER	RCE NO. 48451	PROJECT MANAGER	DATE
CINDY MILLER	RCE NO. 58116	PROJECT MANAGER	DATE
PATRICIA UEMATSU	RCE NO. 36762	PRINCIPAL ENGINEER	DATE

IRVINE RANCH WATER DISTRICT
BAKER WATER TREATMENT PLANT
PROJECT NO. 11218

P&ID
MF WASTE WASHWATER FLASH MIX

DRAWING I603

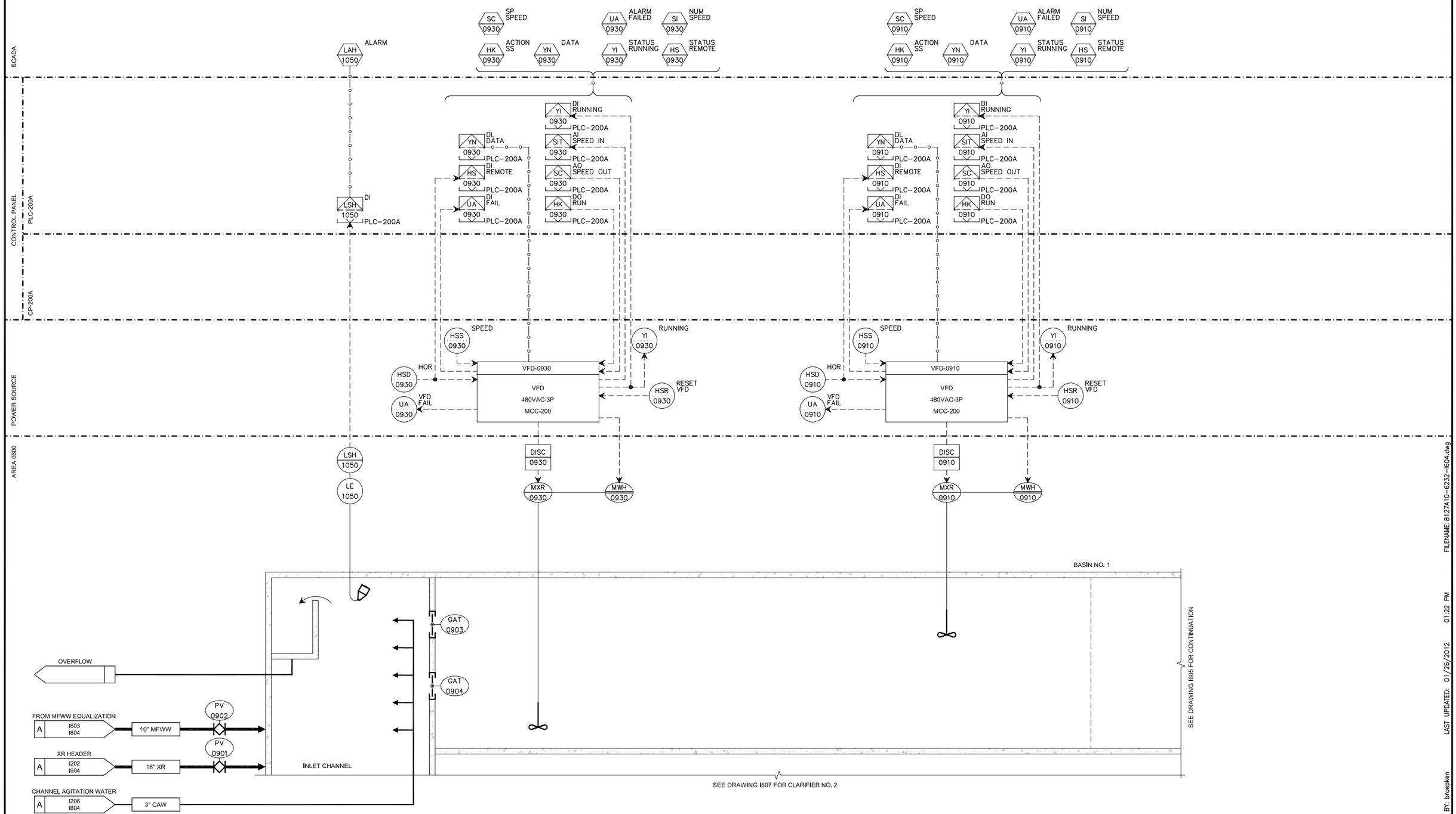

EQUIPMENT TAG NUMBERS ON THIS DRAWING ARE PRECEDED W/ **06-MFWW-** UNLESS OTHERWISE LABELED

No.	DATE	REVISIONS	APPROVED

DESIGNED: MGH
DRAWN: TLF
CHECKED: TAH

RBF CONSULTING

carollo

IRVINE RANCH WATER DISTRICT

JIM MEYERHOFER	RCE NO. 48451	PROJECT MANAGER	DATE
CINDY MILLER	RCE NO. 58116	PROJECT MANAGER	DATE
PATRICIA UEMATSU	RCE NO. 36762	PRINCIPAL ENGINEER	DATE

IRVINE RANCH WATER DISTRICT
BAKER WATER TREATMENT PLANT
PROJECT NO. 11218

P&ID
MF WASTE WASHWATER CLARIFIERS-1

DRAWING I604

SHEET 609 OF 632

FILENAME: 8127A10-6232-I604.dwg
LAST UPDATED: 01/26/2012 01:22 PM
LAST SAVED BY: broepken

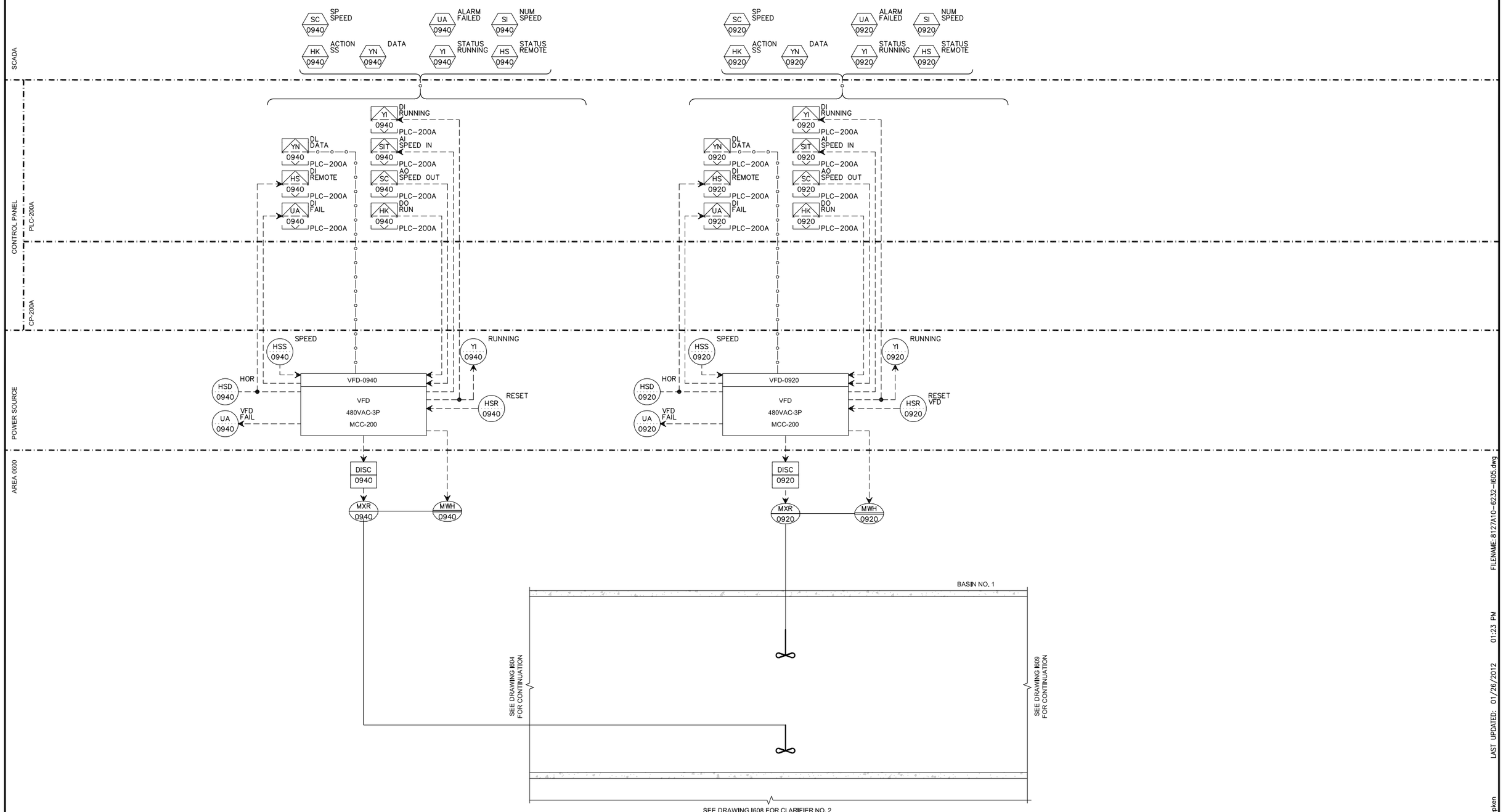

EQUIPMENT TAG NUMBERS ON THIS DRAWING ARE PRECEDED W/ **06-MFWW-** UNLESS OTHERWISE LABELED

No.	DATE	REVISIONS	APPROVED

DESIGNED: MGH
DRAWN: TLF
CHECKED: TAH

RBF CONSULTING

carollo

IRVINE RANCH WATER DISTRICT

JIM MEYERHOFER	RCE NO. 48451	PROJECT MANAGER	DATE
CINDY MILLER	RCE NO. 58116	PROJECT MANAGER	DATE
PATRICIA UEMATSU	RCE NO. 36762	PRINCIPAL ENGINEER	DATE

IRVINE RANCH WATER DISTRICT
BAKER WATER TREATMENT PLANT
PROJECT NO. 11218

P&ID
MF WASTE WASHWATER CLARIFIERS-2

DRAWING I605

SHEET 610 OF 632

FILENAME:8127A10-6232-I605.dwg
LAST UPDATED: 01/26/2012 01:23 PM
LAST SAVED BY: broepken

Attachment 3

SOC WMA

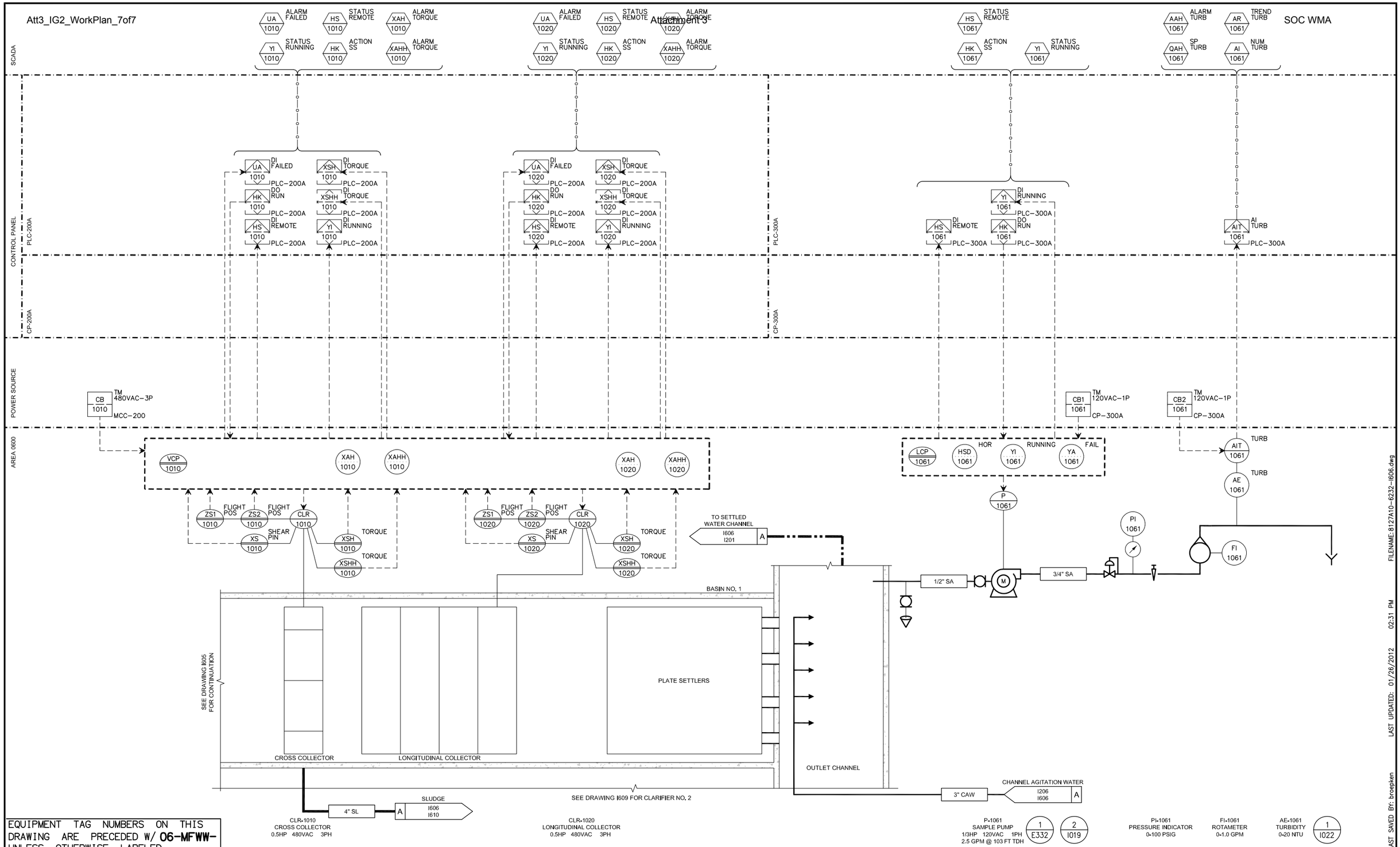

EQUIPMENT TAG NUMBERS ON THIS DRAWING ARE PRECEDED W/ **06-MFWW-** UNLESS OTHERWISE LABELED

No.	DATE	REVISIONS	APPROVED

DESIGNED: MGH
DRAWN: TLF
CHECKED: TAH

RBF CONSULTING

carollo

IRVINE RANCH WATER DISTRICT

JIM MEYERHOFER	RCE NO. 48451	PROJECT MANAGER	DATE
CINDY MILLER	RCE NO. 58116	PROJECT MANAGER	DATE
PATRICIA UEMATSU	RCE NO. 36762	PRINCIPAL ENGINEER	DATE

IRVINE RANCH WATER DISTRICT
BAKER WATER TREATMENT PLANT
PROJECT NO. 11218

P&ID
MF WASTE WASHWATER CLARIFIERS-3

DRAWING I606

SHEET 611 OF 632

FILENAME: 8127A10-6232-I606.dwg
LAST UPDATED: 01/26/2012 02:31 PM
LAST SAVED BY: broepken

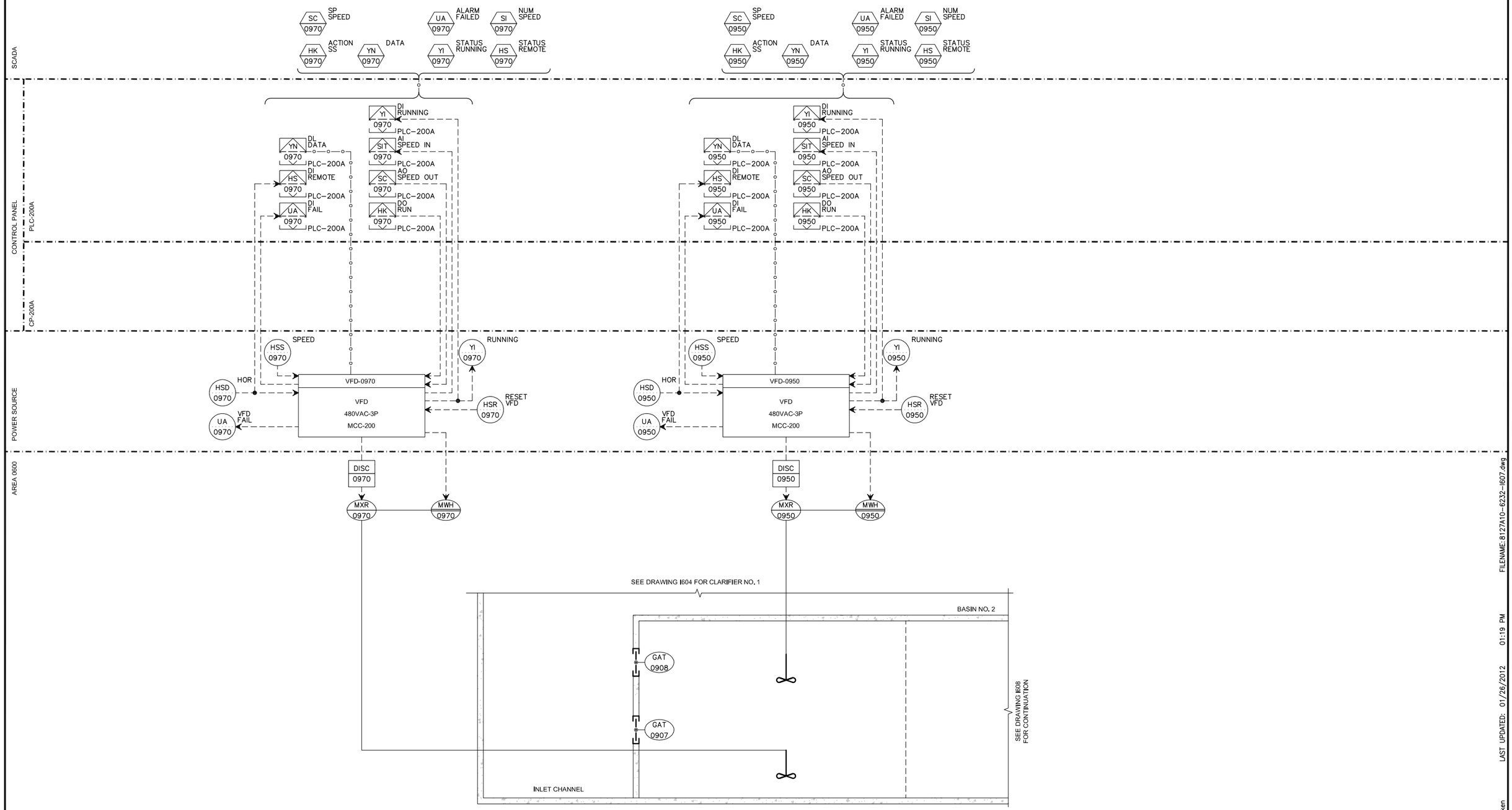

EQUIPMENT TAG NUMBERS ON THIS DRAWING ARE PRECEDED W/ **06-MFWW-** UNLESS OTHERWISE LABELED

No.	DATE	REVISIONS	APPROVED

DESIGNED: MGH
DRAWN: TLF
CHECKED: TAH

RBF CONSULTING

carollo

IRVINE RANCH WATER DISTRICT

JIM MEYERHOFER	RCE NO. 48451	PROJECT MANAGER	DATE
CINDY MILLER	RCE NO. 58116	PROJECT MANAGER	DATE
PATRICIA UEMATSU	RCE NO. 36762	PRINCIPAL ENGINEER	DATE

IRVINE RANCH WATER DISTRICT
BAKER WATER TREATMENT PLANT
PROJECT NO. 11218

P&ID
MF WASTE WASHWATER CLARIFIERS-4

DRAWING I607

SHEET 612 OF 632

FILENAME: 8127A10-6232-I607.dwg
LAST UPDATED: 01/26/2012 01:19 PM
LAST SAVED BY: broepken

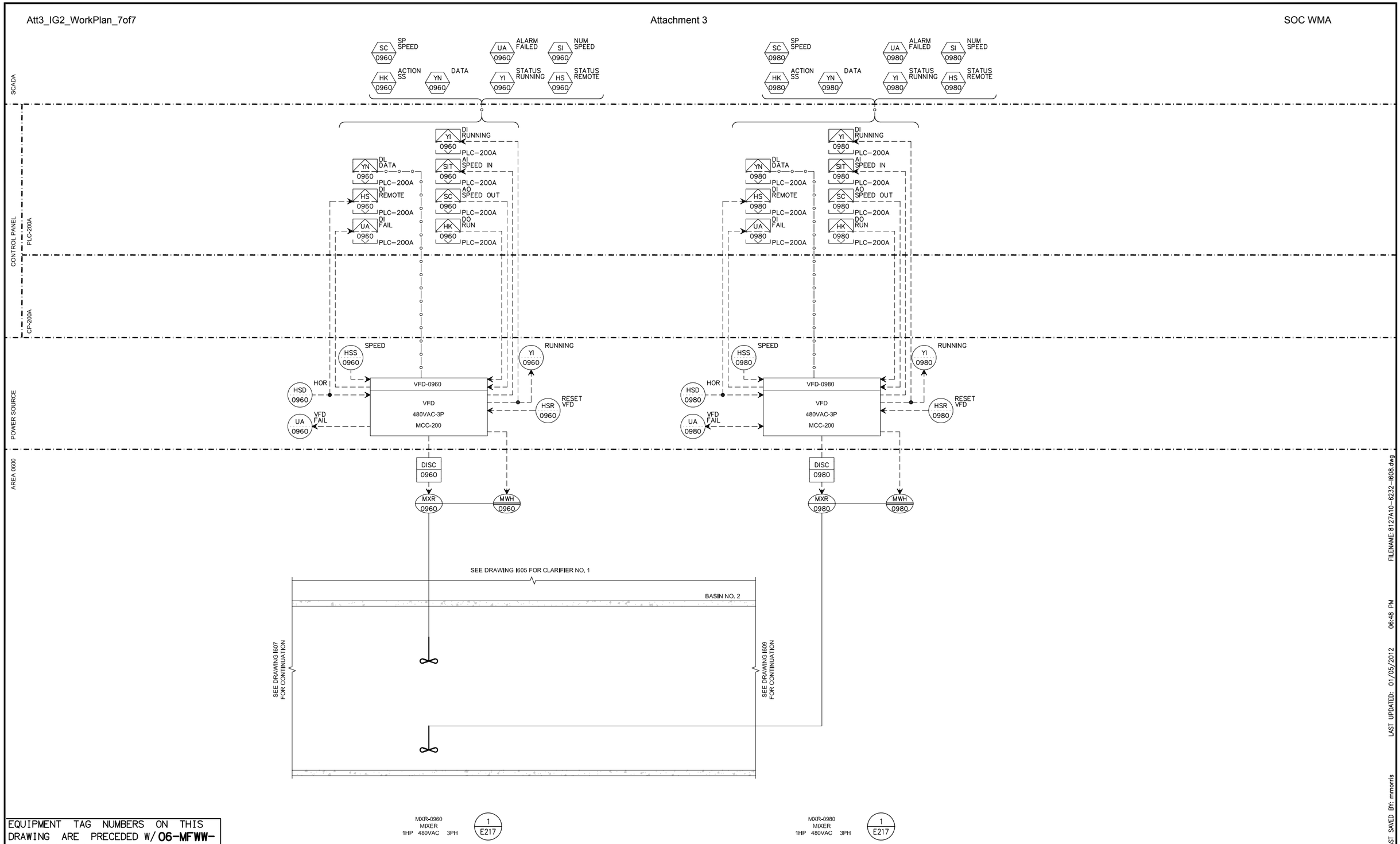

EQUIPMENT TAG NUMBERS ON THIS DRAWING ARE PRECEDED W/ **06-MFWW-** UNLESS OTHERWISE LABELED

No.	DATE	REVISIONS	APPROVED

DESIGNED: MGH
DRAWN: TLF
CHECKED: TAH

RBF CONSULTING

carollo

IRVINE RANCH WATER DISTRICT

JIM MEYERHOFER	RCE NO. 48451	PROJECT MANAGER	DATE
CINDY MILLER	RCE NO. 58116	PROJECT MANAGER	DATE
PATRICIA UEMATSU	RCE NO. 36762	PRINCIPAL ENGINEER	DATE

IRVINE RANCH WATER DISTRICT
BAKER WATER TREATMENT PLANT
PROJECT NO. 11218

P&ID
MF WASTE WASHWATER CLARIFIERS-5

DRAWING I608

SHEET 613 OF 632

FILENAME: 8127A10-6232-I608.dwg
LAST UPDATED: 01/05/2012 06:48 PM
LAST SAVED BY: mmorris

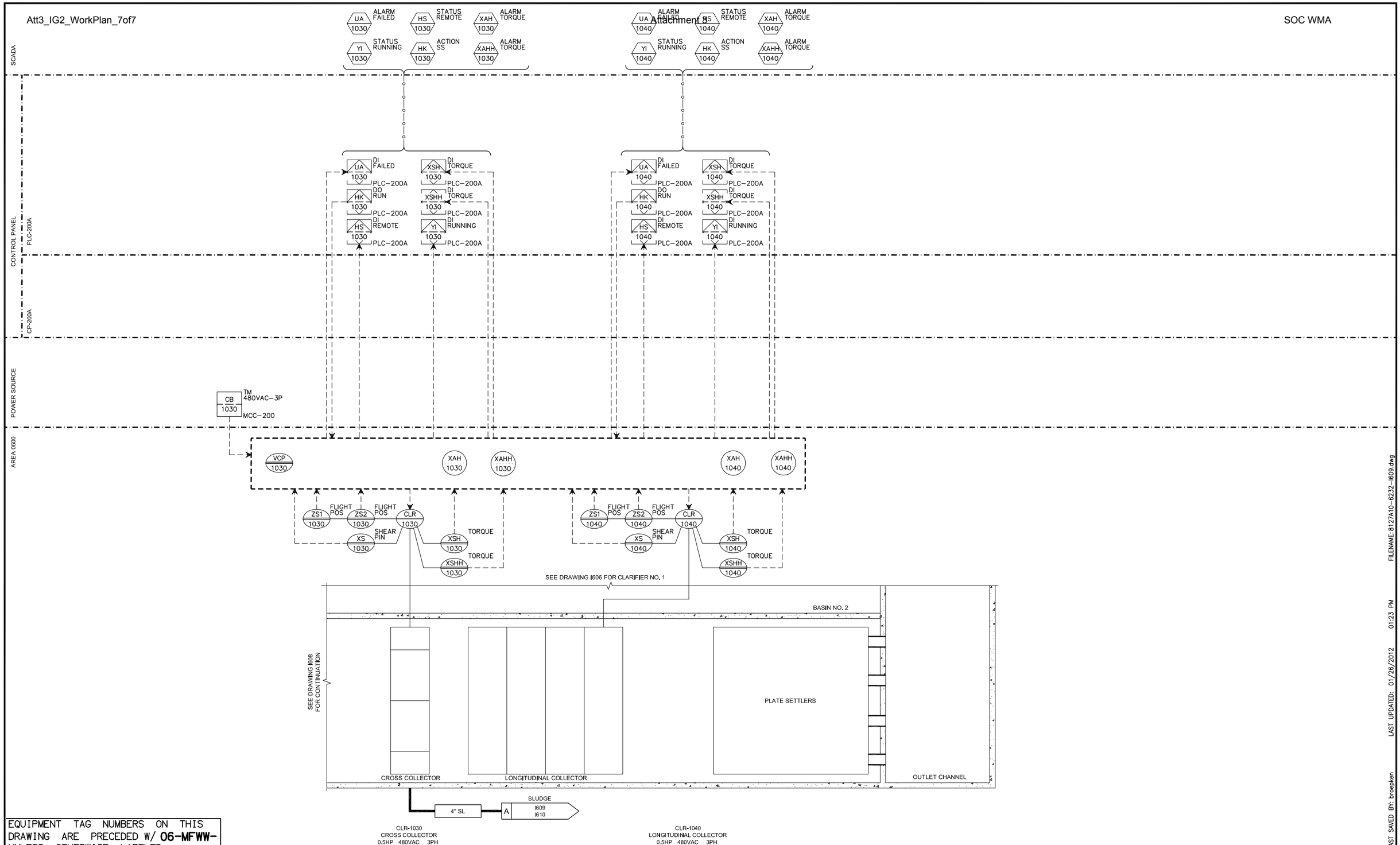

EQUIPMENT TAG NUMBERS ON THIS DRAWING ARE PRECEDED W/ **06-MFWW-** UNLESS OTHERWISE LABELED

No.	DATE	REVISIONS	APPROVED

DESIGNED: MGH
DRAWN: TLF
CHECKED: TAH

RBF CONSULTING

carollo

IRVINE RANCH WATER DISTRICT

JIM MEYERHOFER	RCE NO. 48451	PROJECT MANAGER	DATE
CINDY MILLER	RCE NO. 58116	PROJECT MANAGER	DATE
PATRICIA UEMATSU	RCE NO. 36762	PRINCIPAL ENGINEER	DATE

IRVINE RANCH WATER DISTRICT
BAKER WATER TREATMENT PLANT
PROJECT NO. 11218

P&ID
MF WASTE WASHWATER CLARIFIERS-6

DRAWING I609

SHEET 614 OF 632

FILENAME: 8127A10-6232-I609.dwg
LAST UPDATED: 01/26/2012 01:23 PM
LAST SAVED BY: broepken

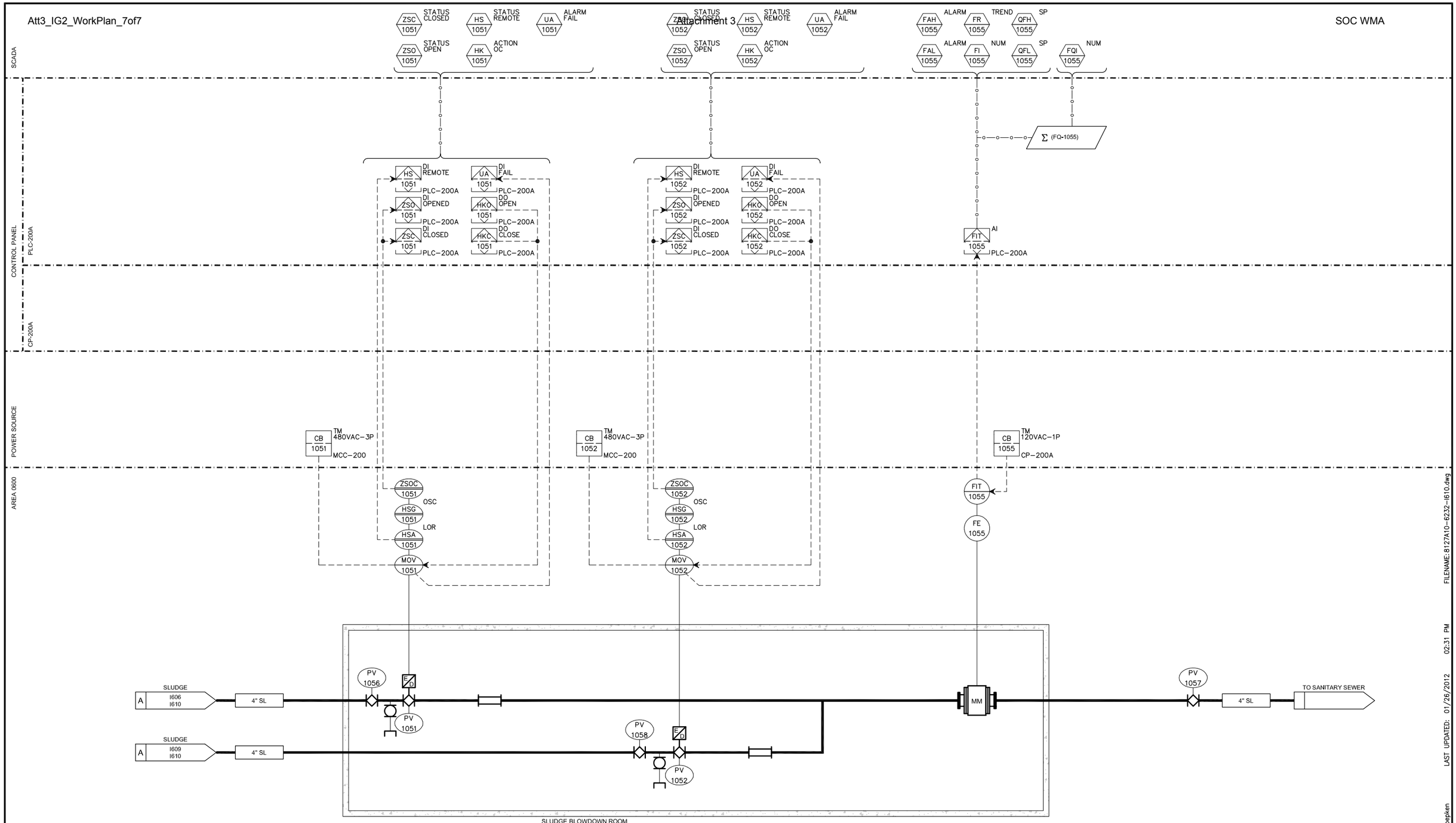

EQUIPMENT TAG NUMBERS ON THIS DRAWING ARE PRECEDED W/ **06-SL-** UNLESS OTHERWISE LABELED

MOV-1051
ELECTRIC DISCRETE RUN OPEN/CLOSE VALVE
2 / E218

MOV-1052
ELECTRIC DISCRETE RUN OPEN/CLOSE VALVE
2 / E218

FE-1055
FLOW METER
0-300 GPM
4"
NF136 / TYP
NF137 / TYP

No.	DATE	REVISIONS	APPROVED

DESIGNED: MGH
DRAWN: TLF
CHECKED: TAH

RBF CONSULTING
carollo
IRVINE RANCH WATER DISTRICT

JIM MEYERHOFER	RCE NO. 48451	PROJECT MANAGER	DATE
CINDY MILLER	RCE NO. 58116	PROJECT MANAGER	DATE
PATRICIA UEMATSU	RCE NO. 36762	PRINCIPAL ENGINEER	DATE

IRVINE RANCH WATER DISTRICT
BAKER WATER TREATMENT PLANT
PROJECT NO. 11218

P&ID
MF WASTE WASHWATER
CLARIFIER SLUDGE VALVES

DRAWING I610
SHEET 615 OF 632

FILENAME: 8127A10-6232-I610.dwg
LAST UPDATED: 01/26/2012 02:31 PM
LAST SAVED BY: broepken

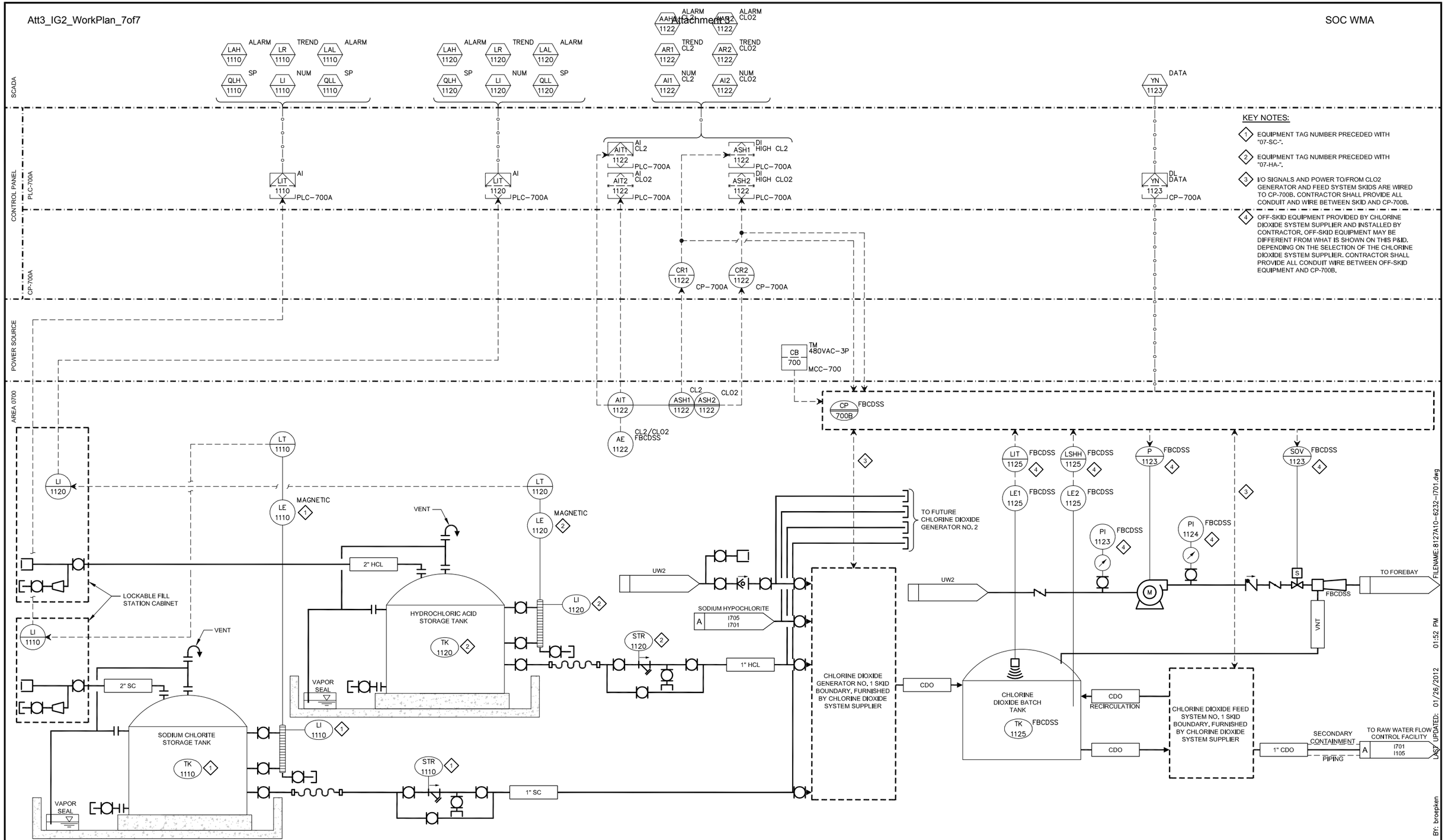

EQUIPMENT TAG NUMBERS ON THIS DRAWING ARE PRECEDED W/ **07-CDO-** UNLESS OTHERWISE LABELED

LE-1110 MAGNETIC LEVEL TRANSMITTER 0-12 FT — 1 / I020

LE-1120 MAGNETIC LEVEL TRANSMITTER 0-12 FT — 2 / I020

AE-1122 AMBIENT GAS DETECTOR — NA001 / TYP

No.	DATE	REVISIONS	APPROVED

DESIGNED: MGH
DRAWN: TLF
CHECKED: TAH

RBF CONSULTING
carollo
IRVINE RANCH WATER DISTRICT

JIM MEYERHOFER	RCE NO. 48451	PROJECT MANAGER	DATE
CINDY MILLER	RCE NO. 58116	PROJECT MANAGER	DATE
PATRICIA UEMATSU	RCE NO. 36762	PRINCIPAL ENGINEER	DATE

IRVINE RANCH WATER DISTRICT
BAKER WATER TREATMENT PLANT
PROJECT NO. 11218

P&ID
CHLORINE DIOXIDE FEED SYSTEM

DRAWING I701

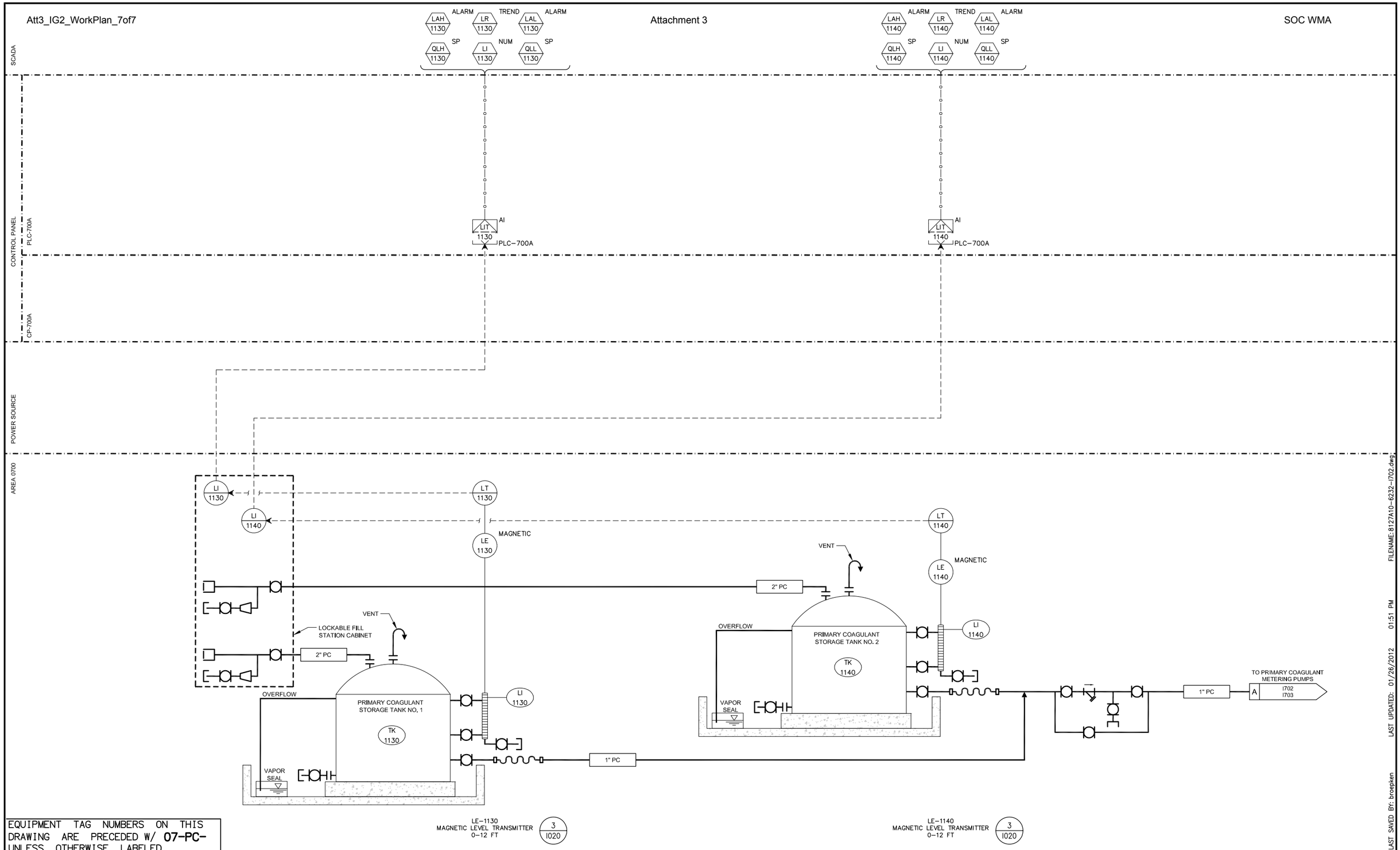

EQUIPMENT TAG NUMBERS ON THIS DRAWING ARE PRECEDED W/ **07-PC-** UNLESS OTHERWISE LABELED

No.	DATE	REVISIONS	APPROVED

DESIGNED: MGH
DRAWN: TLF
CHECKED: TAH

RBF CONSULTING

carollo

IRVINE RANCH WATER DISTRICT

JIM MEYERHOFER	RCE NO. 48451	PROJECT MANAGER	DATE
CINDY MILLER	RCE NO. 58116	PROJECT MANAGER	DATE
PATRICIA UEMATSU	RCE NO. 36762	PRINCIPAL ENGINEER	DATE

IRVINE RANCH WATER DISTRICT
BAKER WATER TREATMENT PLANT
PROJECT NO. 11218

P&ID
PRIMARY COAGULANT FEED SYSTEM-1

DRAWING I702

SHEET 617 OF 632

FILENAME: 8127A10-6232-I702.dwg
LAST UPDATED: 01/26/2012 01:51 PM
LAST SAVED BY: broepken

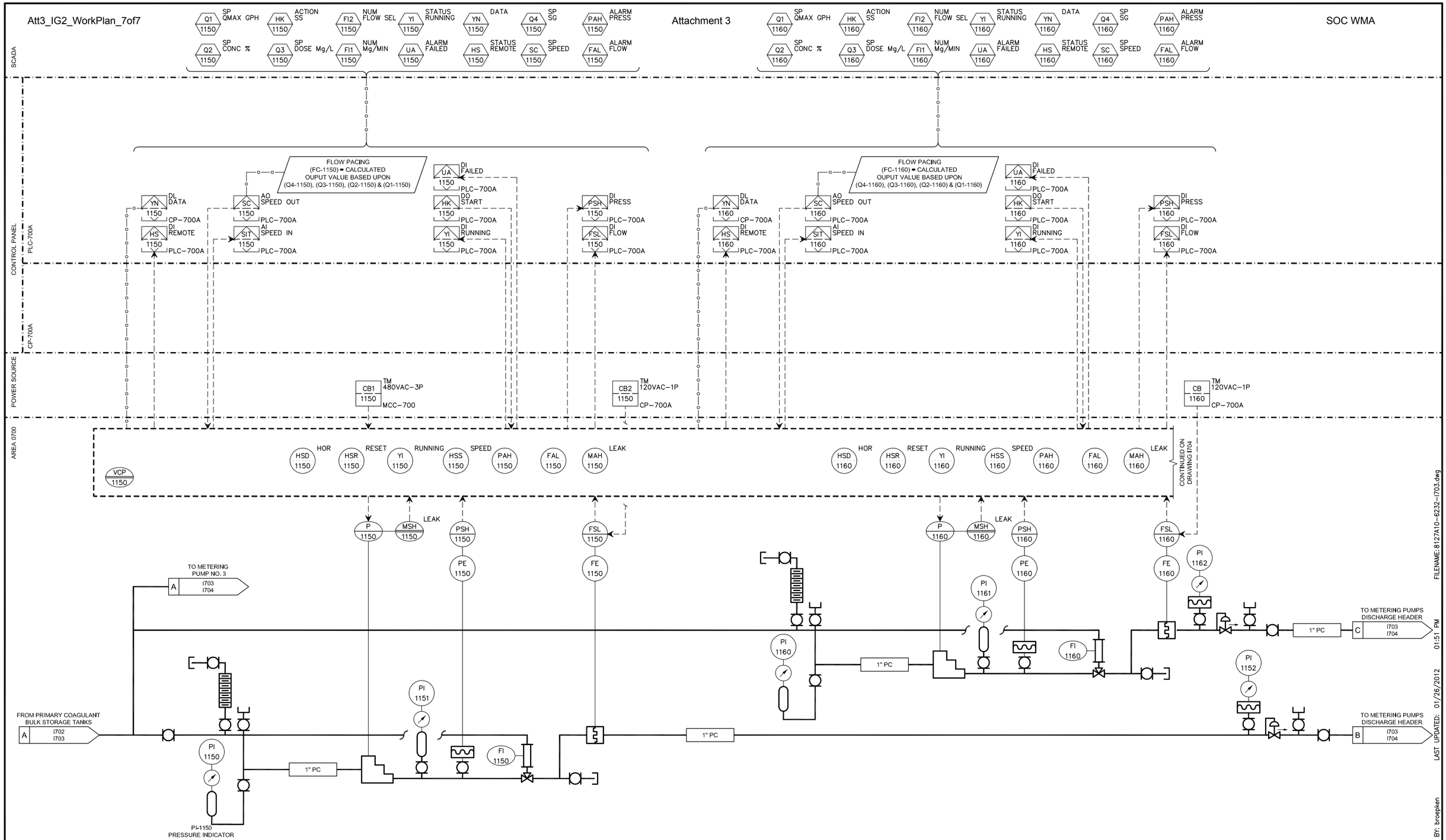

EQUIPMENT TAG NUMBERS ON THIS DRAWING ARE PRECEDED W/ **07-PC-** UNLESS OTHERWISE LABELED

No.	DATE	REVISIONS	APPROVED

DESIGNED: MGH
DRAWN: TLF
CHECKED: TAH

RBF CONSULTING

carollo

IRVINE RANCH WATER DISTRICT

JIM MEYERHOFER	RCE NO. 48451	PROJECT MANAGER	DATE
CINDY MILLER	RCE NO. 58116	PROJECT MANAGER	DATE
PATRICIA UEMATSU	RCE NO. 36762	PRINCIPAL ENGINEER	DATE

IRVINE RANCH WATER DISTRICT
BAKER WATER TREATMENT PLANT
PROJECT NO. 11218

P&ID
PRIMARY COAGULANT FEED SYSTEM-2

DRAWING I703

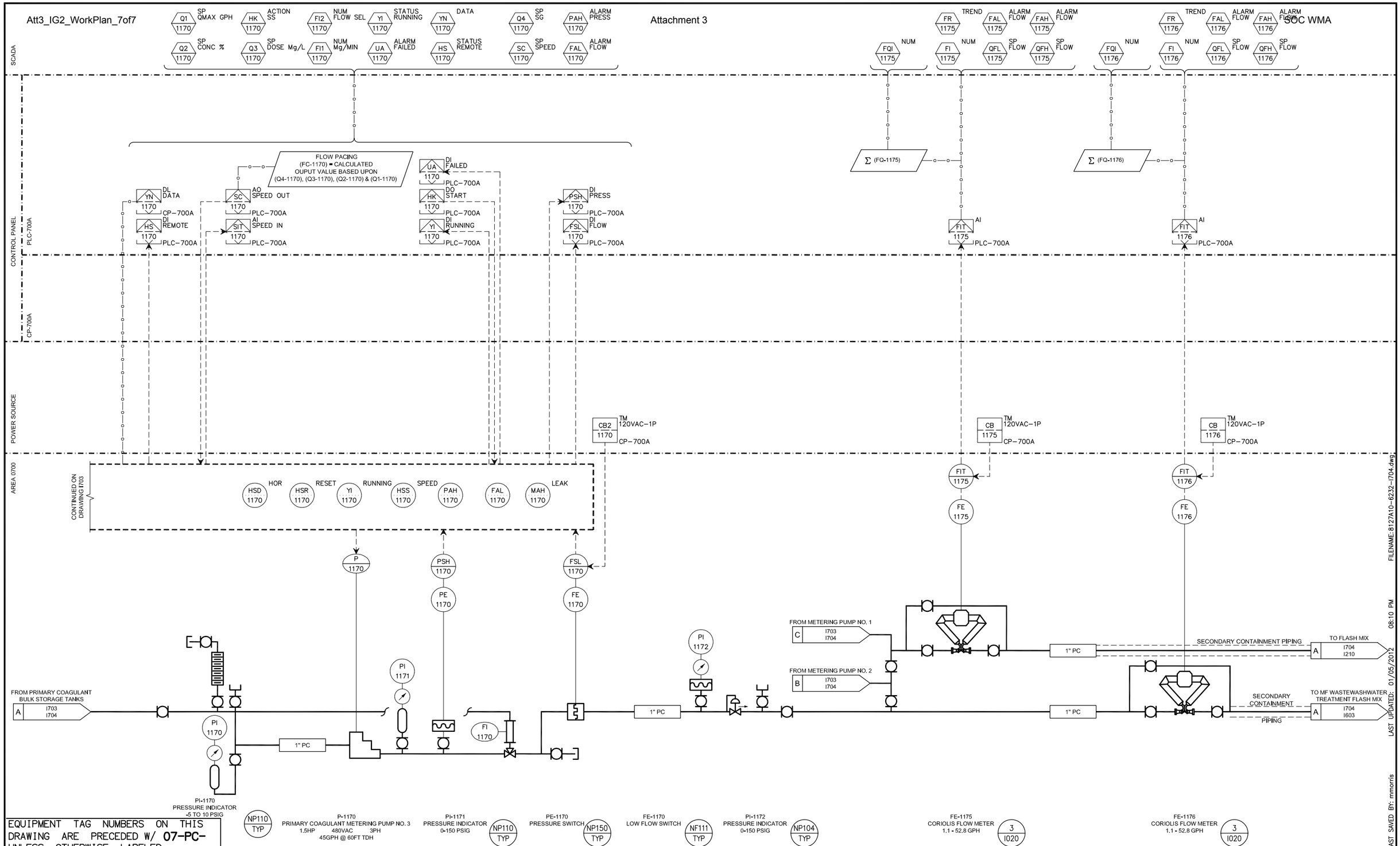

EQUIPMENT TAG NUMBERS ON THIS DRAWING ARE PRECEDED W/ **07-PC-** UNLESS OTHERWISE LABELED

No.	DATE	REVISIONS	APPROVED

DESIGNED: MGH
DRAWN: TLF
CHECKED: TAH

RBF CONSULTING

carollo

IRVINE RANCH WATER DISTRICT

JIM MEYERHOFER	RCE NO. 48451	PROJECT MANAGER	DATE
CINDY MILLER	RCE NO. 58116	PROJECT MANAGER	DATE
PATRICIA UEMATSU	RCE NO. 36762	PRINCIPAL ENGINEER	DATE

IRVINE RANCH WATER DISTRICT
BAKER WATER TREATMENT PLANT
PROJECT NO. 11218

P&ID
PRIMARY COAGULANT
FEED SYSTEM-3

DRAWING I704

SHEET 619 OF 632

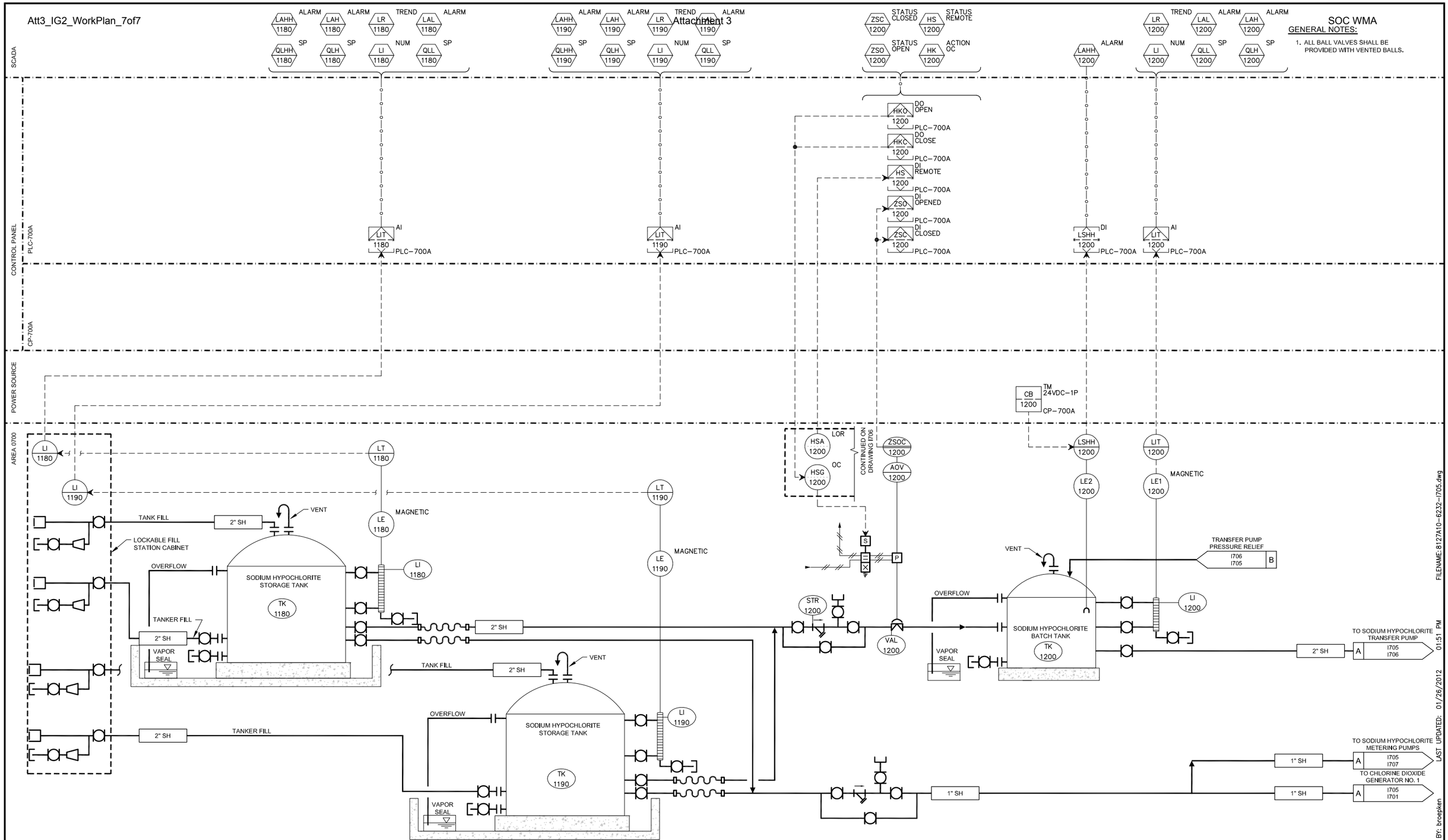

SOC WMA

GENERAL NOTES:

1. ALL BALL VALVES SHALL BE PROVIDED WITH VENTED BALLS.

EQUIPMENT TAG NUMBERS ON THIS DRAWING ARE PRECEDED W/ **07-SH-** UNLESS OTHERWISE LABELED

LE-1180 MAGNETIC LEVEL TRANSMITTER 0-11 FT — 4 / I020

LE-1190 MAGNETIC LEVEL TRANSMITTER 0-11 FT — 4 / I020

AOV-1200 PNEUMATIC DISCRETE VALVE RUN OPEN/CLOSE

LE2-1200 LEVEL SWITCH — NL116 / TYP

LE1-1200 MAGNETIC LEVEL TRANSMITTER 0-3 FT — 4 / I020

No.	DATE	REVISIONS	APPROVED

DESIGNED: MGH
DRAWN: DKI
CHECKED: TAH

RBF CONSULTING

carollo

IRVINE RANCH WATER DISTRICT

JIM MEYERHOFER	RCE NO. 48451	PROJECT MANAGER	DATE
CINDY MILLER	RCE NO. 58116	PROJECT MANAGER	DATE
PATRICIA UEMATSU	RCE NO. 36762	PRINCIPAL ENGINEER	DATE

IRVINE RANCH WATER DISTRICT
BAKER WATER TREATMENT PLANT
PROJECT NO. 11218

P&ID
SODIUM HYPOCHLORITE FEED SYSTEM-1

DRAWING I705

SHEET 620 OF 632

FILENAME: 8127A10-6232-I705.dwg
LAST UPDATED: 01/26/2012 01:51 PM
LAST SAVED BY: broepken

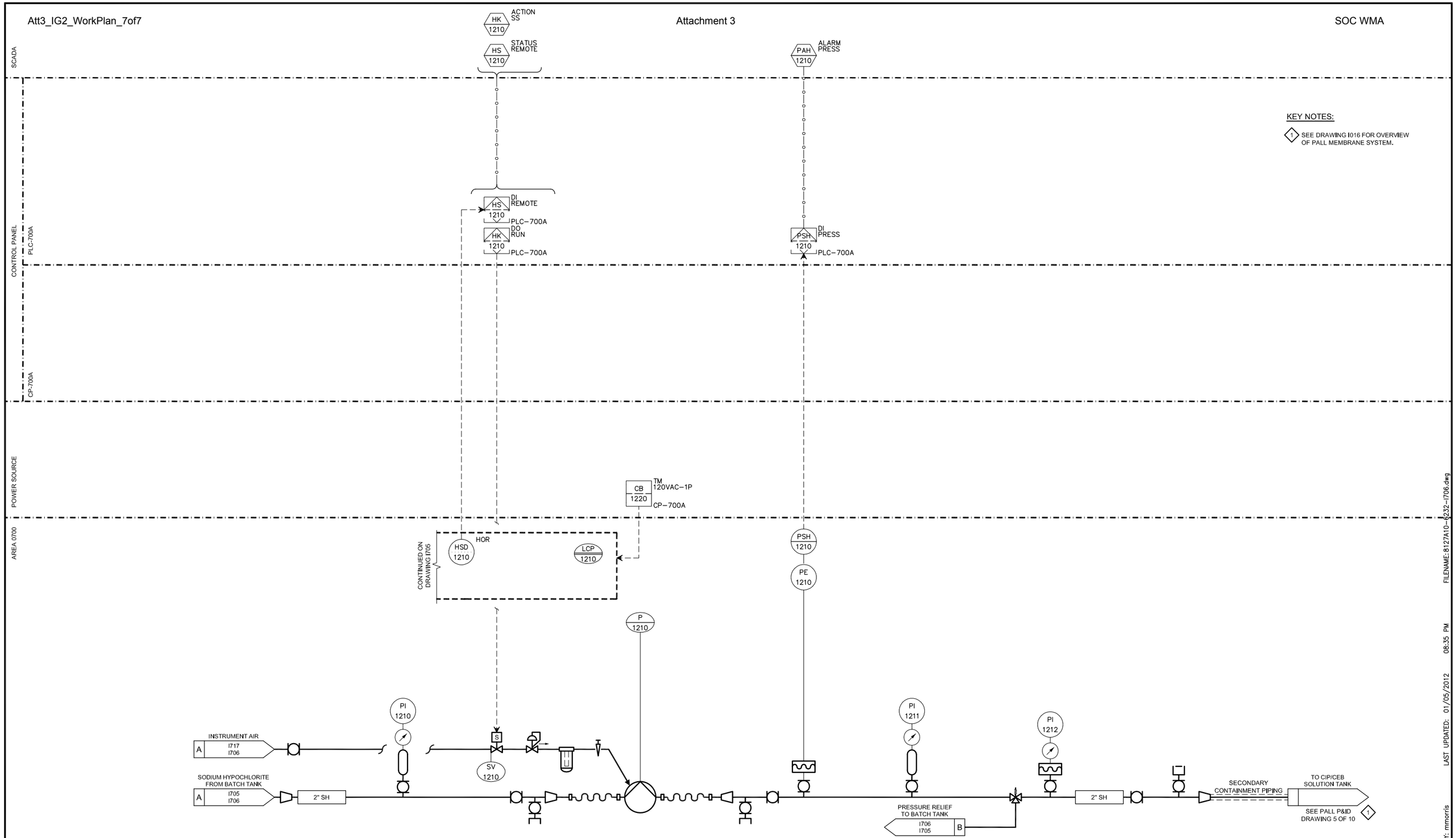

KEY NOTES:

1. SEE DRAWING I016 FOR OVERVIEW OF PALL MEMBRANE SYSTEM.

EQUIPMENT TAG NUMBERS ON THIS DRAWING ARE PRECEDED W/ **07-SH-** UNLESS OTHERWISE LABELED

No.	DATE	REVISIONS	APPROVED

DESIGNED: MGH
DRAWN: DKI
CHECKED: TAH

RBF CONSULTING

carollo

IRVINE RANCH WATER DISTRICT

JIM MEYERHOFER	RCE NO. 48451	PROJECT MANAGER	DATE
CINDY MILLER	RCE NO. 58116	PROJECT MANAGER	DATE
PATRICIA UEMATSU	RCE NO. 36762	PRINCIPAL ENGINEER	DATE

IRVINE RANCH WATER DISTRICT
BAKER WATER TREATMENT PLANT
PROJECT NO. 11218

P&ID
SODIUM HYPOCHLORITE FEED SYSTEM-2

DRAWING I706

SHEET **621** OF **632**

FILENAME:8127A10-6232-I706.dwg
LAST UPDATED: 01/05/2012 08:35 PM
LAST SAVED BY: mmorris

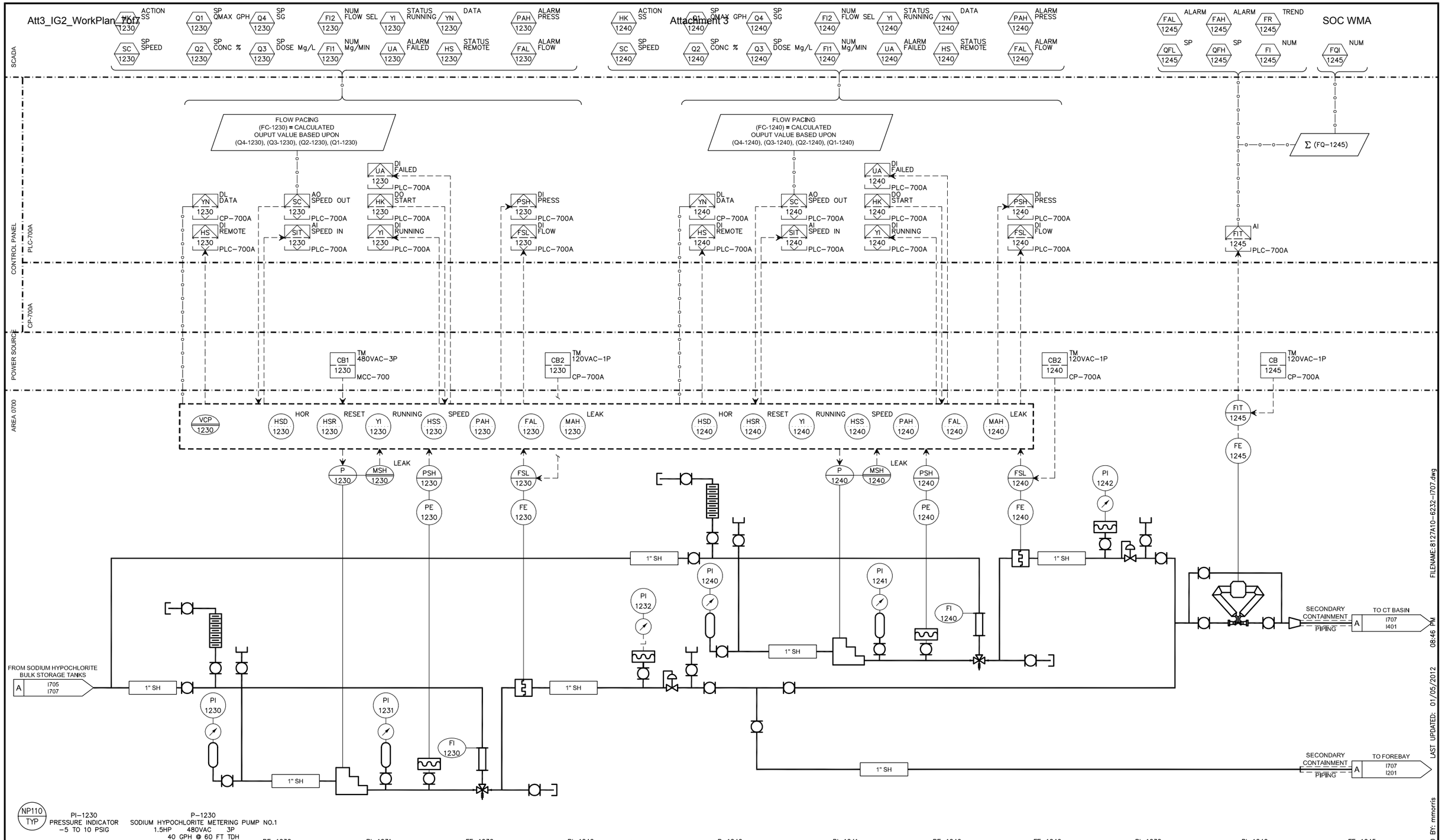

EQUIPMENT TAG NUMBERS ON THIS DRAWING ARE PRECEDED W/ **07-SH-** UNLESS OTHERWISE LABELED

No.	DATE	REVISIONS	APPROVED

DESIGNED: MGH
DRAWN: DKI
CHECKED: TAH

RBF CONSULTING
carollo
IRVINE RANCH WATER DISTRICT

JIM MEYERHOFER	RCE NO. 48451	PROJECT MANAGER	DATE
CINDY MILLER	RCE NO. 58116	PROJECT MANAGER	DATE
PATRICIA UEMATSU	RCE NO. 36762	PRINCIPAL ENGINEER	DATE

IRVINE RANCH WATER DISTRICT
BAKER WATER TREATMENT PLANT
PROJECT NO. 11218

P&ID
SODIUM HYPOCHLORITE FEED SYSTEM-3

DRAWING I707

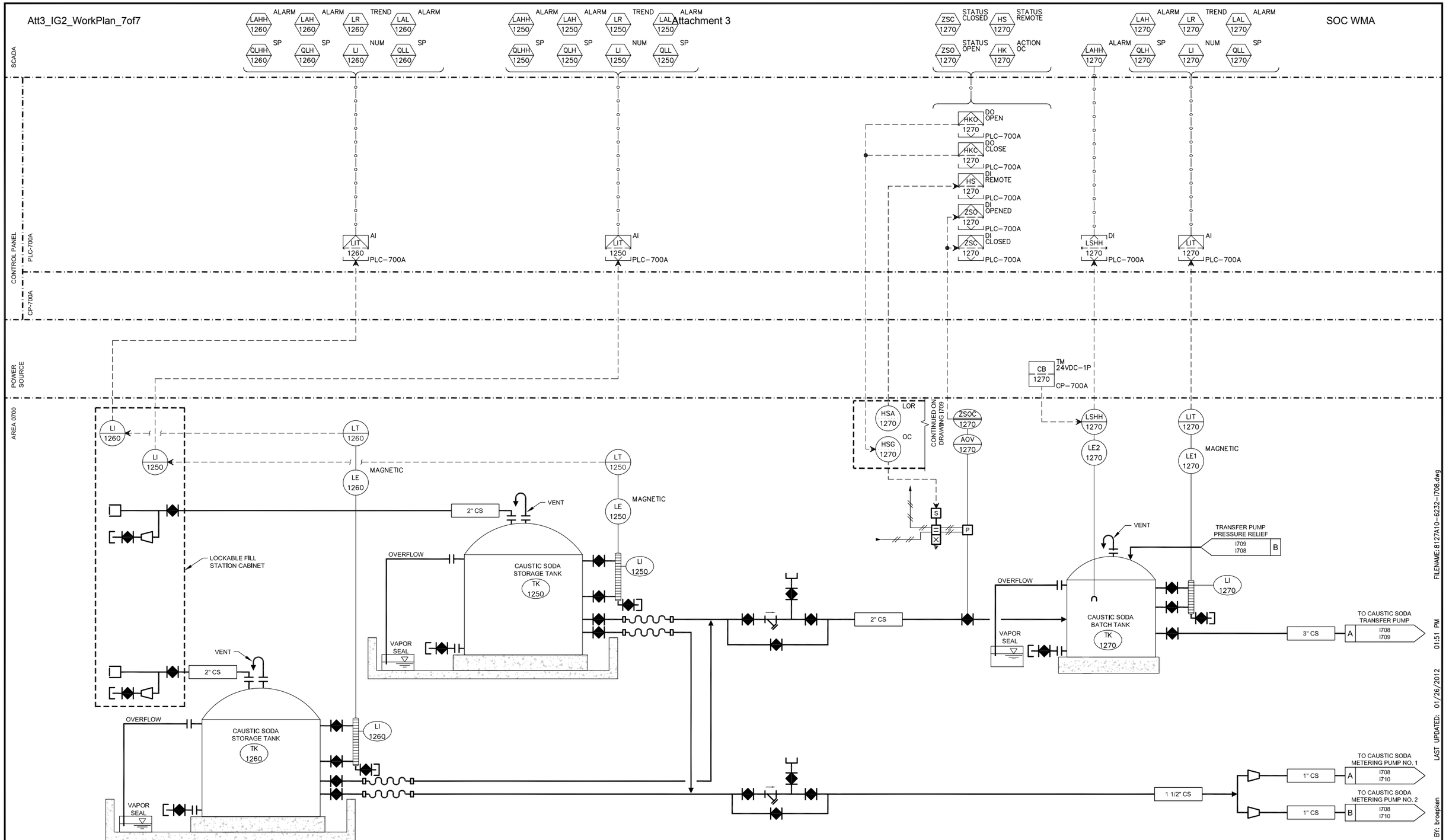

EQUIPMENT TAG NUMBERS ON THIS DRAWING ARE PRECEDED W/ **07-CS-** UNLESS OTHERWISE LABELED

No.	DATE	REVISIONS	APPROVED

DESIGNED: MGH
DRAWN: DKI
CHECKED: TAH

RBF CONSULTING

carollo

IRVINE RANCH WATER DISTRICT

JIM MEYERHOFER	RCE NO. 48451	PROJECT MANAGER	DATE
CINDY MILLER	RCE NO. 58116	PROJECT MANAGER	DATE
PATRICIA UEMATSU	RCE NO. 36762	PRINCIPAL ENGINEER	DATE

IRVINE RANCH WATER DISTRICT
BAKER WATER TREATMENT PLANT
PROJECT NO. 11218

P&ID
CAUSTIC SODA FEED SYSTEM-1

DRAWING
I708

SHEET
623 OF 632

FILENAME:8127A10-6232-I708.dwg
LAST UPDATED: 01/26/2012 01:51 PM
LAST SAVED BY: broepken

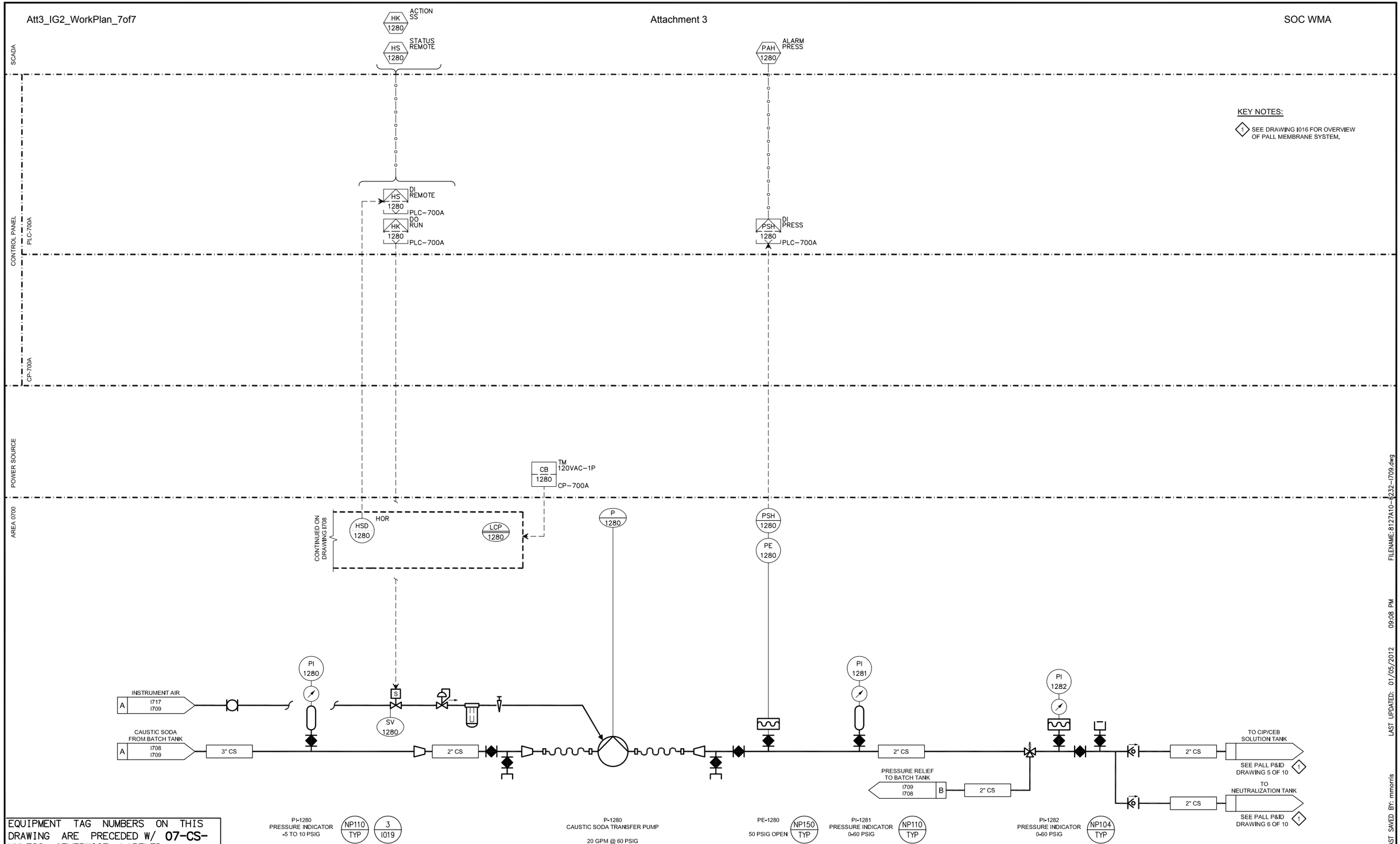

EQUIPMENT TAG NUMBERS ON THIS DRAWING ARE PRECEDED W/ **07-CS-** UNLESS OTHERWISE LABELED

FILENAME: 8127A10-6232-I709.dwg

LAST UPDATED: 01/05/2012 09:08 PM

LAST SAVED BY: mmorris

No.	DATE	REVISIONS	APPROVED

DESIGNED: MGH

DRAWN: TLF

CHECKED: TAH

RBF CONSULTING

carollo

IRVINE RANCH WATER DISTRICT

JIM MEYERHOFER	RCE NO. 48451	PROJECT MANAGER	DATE
CINDY MILLER	RCE NO. 58116	PROJECT MANAGER	DATE
PATRICIA UEMATSU	RCE NO. 36762	PRINCIPAL ENGINEER	DATE

IRVINE RANCH WATER DISTRICT
BAKER WATER TREATMENT PLANT
PROJECT NO. 11218

P&ID
CAUSTIC SODA FEED SYSTEM-2

DRAWING I709

SHEET 624 OF 632

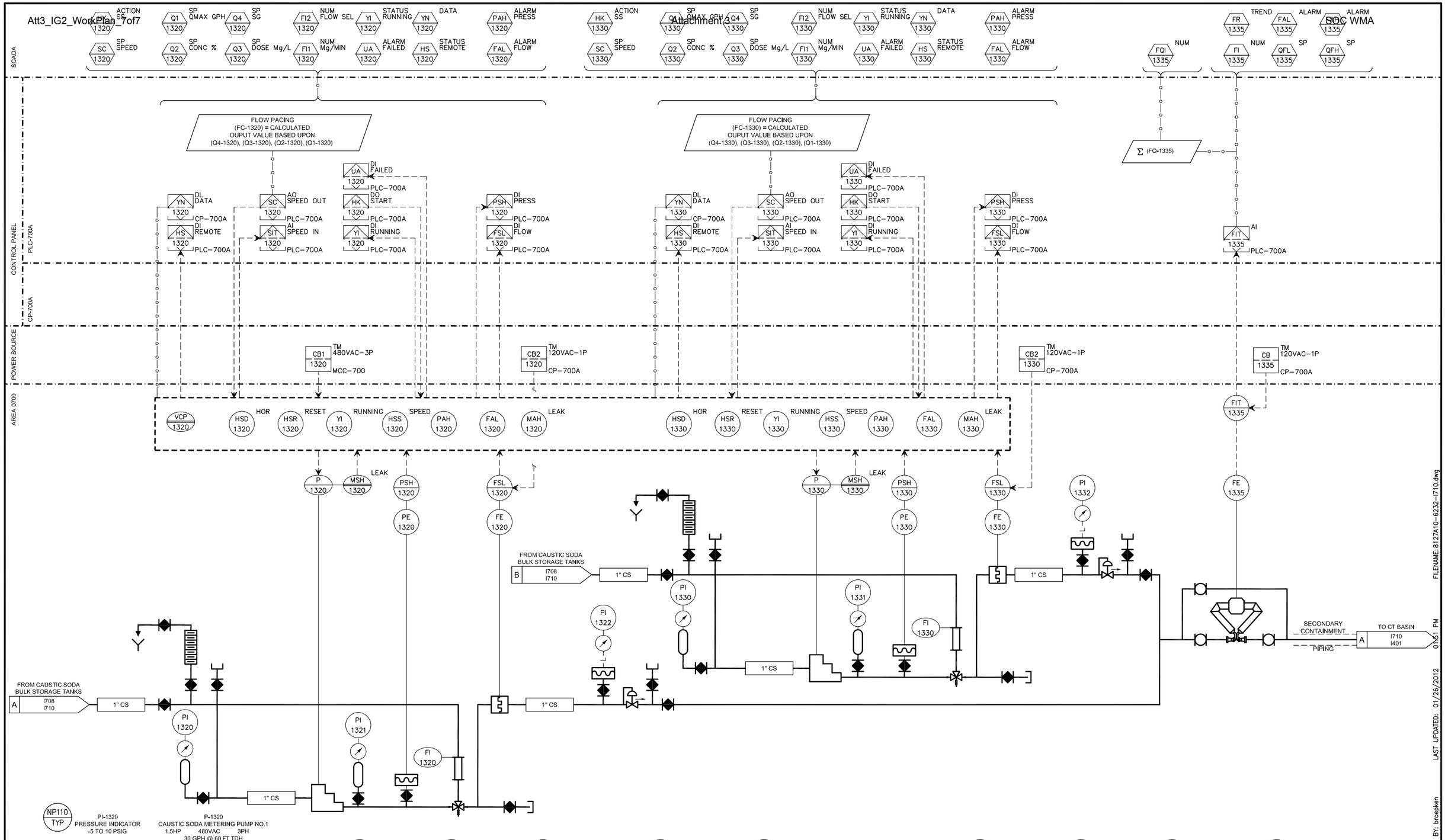

EQUIPMENT TAG NUMBERS ON THIS DRAWING ARE PRECEDED W/ "07-CS-" UNLESS OTHERWISE LABELED

No.	DATE	REVISIONS	APPROVED

DESIGNED: MGH
DRAWN: TLF
CHECKED: TAH

RBF CONSULTING
carollo
IRVINE RANCH WATER DISTRICT

JIM MEYERHOFER	RCE NO. 48451	PROJECT MANAGER	DATE
CINDY MILLER	RCE NO. 58116	PROJECT MANAGER	DATE
PATRICIA UEMATSU	RCE NO. 36762	PRINCIPAL ENGINEER	DATE

IRVINE RANCH WATER DISTRICT
BAKER WATER TREATMENT PLANT
PROJECT NO. 11218

P&ID
CAUSTIC SODA FEED SYSTEM-3

DRAWING I710
SHEET 625 OF 632

FILENAME: 8127A10-6232-I710.dwg
LAST UPDATED: 01/26/2012 01:51 PM
LAST SAVED BY: broepken

SOC WMA

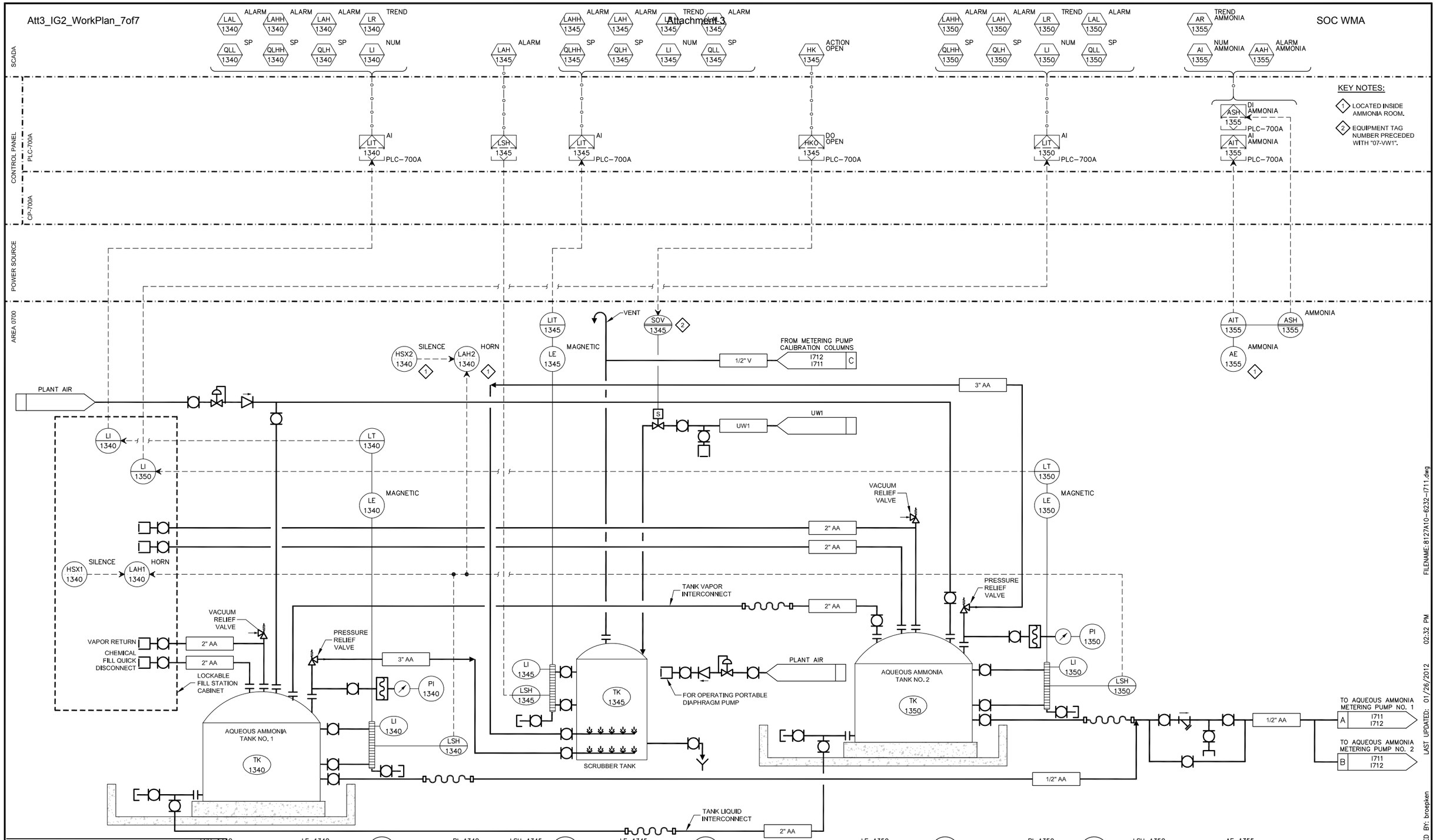

EQUIPMENT TAG NUMBERS ON THIS DRAWING ARE PRECEDED W/ **07-AA-** UNLESS OTHERWISE LABELED

LSH-1340 LEVEL SWITCH HIGH
LE-1340 MAGNETIC LEVEL TRANSMITTER 0-9 FT (2 / I021)
PI-1340 PRESSURE INDICATOR 0-50 PSIG
LSH-1345
LE-1345 MAGNETIC LEVEL TRANSMITTER 0-9 FT (2 / I021)
LE-1350 MAGNETIC LEVEL TRANSMITTER 0-9 FT (2 / I021)
PI-1350 PRESSURE INDICATOR 0-50 PSIG (NP104 / TYP)
LSH-1350 LEVEL SWITCH HIGH
AE-1355 AMBIENT AMMONIA DETECTOR

FILENAME: 8127A10-6232-I711.dwg
LAST UPDATED: 01/26/2012 02:32 PM
LAST SAVED BY: broepken

No.	DATE	REVISIONS	APPROVED

DESIGNED: MGH
DRAWN: DKI
CHECKED: TAH

RBF CONSULTING
carollo
IRVINE RANCH WATER DISTRICT

JIM MEYERHOFER RCE NO. 48451 PROJECT MANAGER DATE
CINDY MILLER RCE NO. 58116 PROJECT MANAGER DATE
PATRICIA UEMATSU RCE NO. 36762 PRINCIPAL ENGINEER DATE

IRVINE RANCH WATER DISTRICT
BAKER WATER TREATMENT PLANT
PROJECT NO. 11218

P&ID
AQUEOUS AMMONIA FEED SYSTEM-1

DRAWING I711

SOC WMA

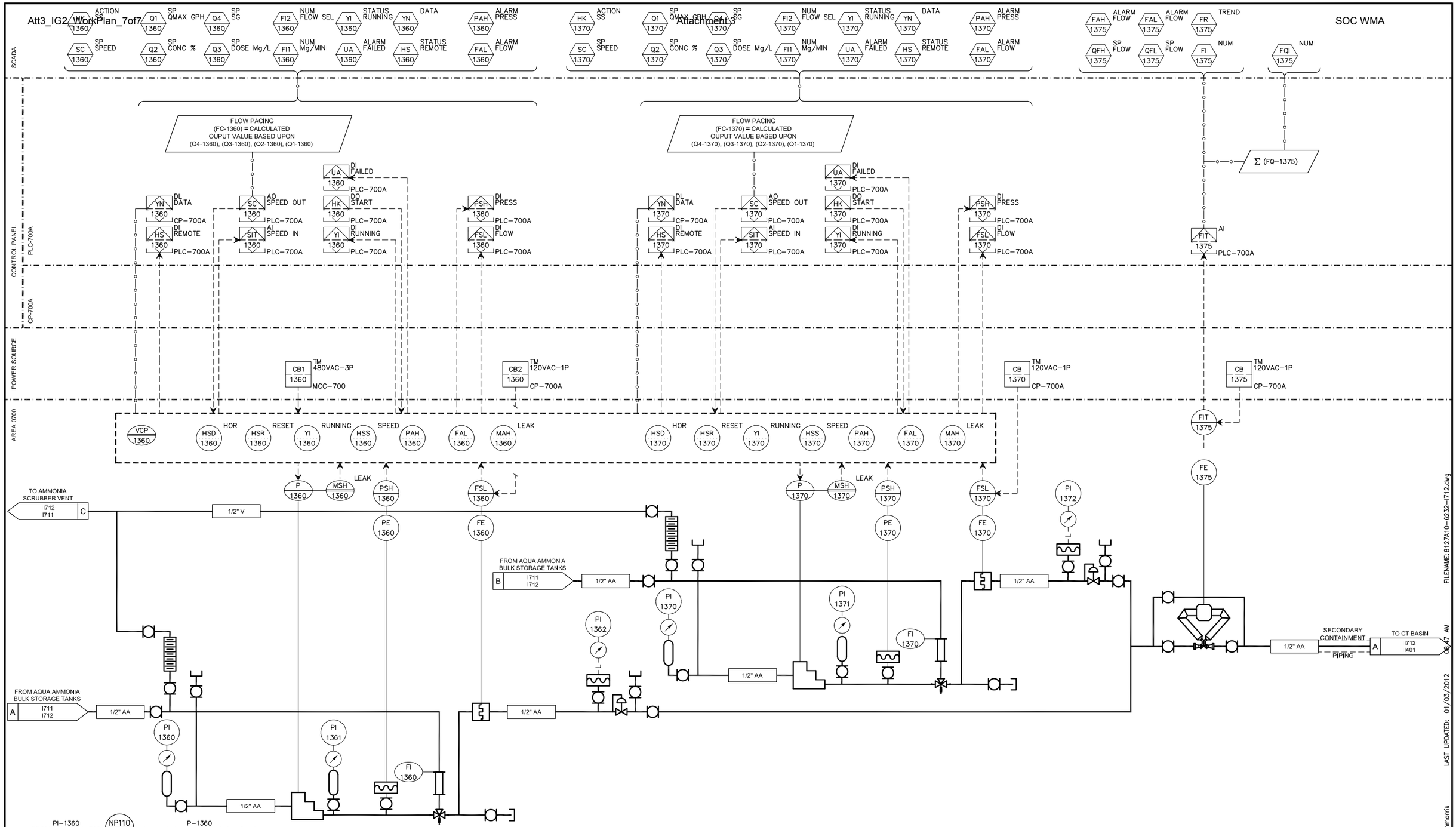

EQUIPMENT TAG NUMBERS ON THIS DRAWING ARE PRECEDED W/ **07-AA-** UNLESS OTHERWISE LABELED

No.	DATE	REVISIONS	APPROVED

DESIGNED: MGH
DRAWN: DKI
CHECKED: TAH

RBF CONSULTING
carollo
IRVINE RANCH WATER DISTRICT

JIM MEYERHOFER	RCE NO. 48451	PROJECT MANAGER	DATE
CINDY MILLER	RCE NO. 58116	PROJECT MANAGER	DATE
PATRICIA UEMATSU	RCE NO. 36762	PRINCIPAL ENGINEER	DATE

IRVINE RANCH WATER DISTRICT
BAKER WATER TREATMENT PLANT
PROJECT NO. 11218

P&ID
AQUEOUS AMMONIA FEED SYSTEM-2

DRAWING I712
SHEET 627 OF 632

FILENAME: 8127A10-6232-I712.dwg
LAST UPDATED: 01/03/2012 08:47 AM
LAST SAVED BY: mmorris

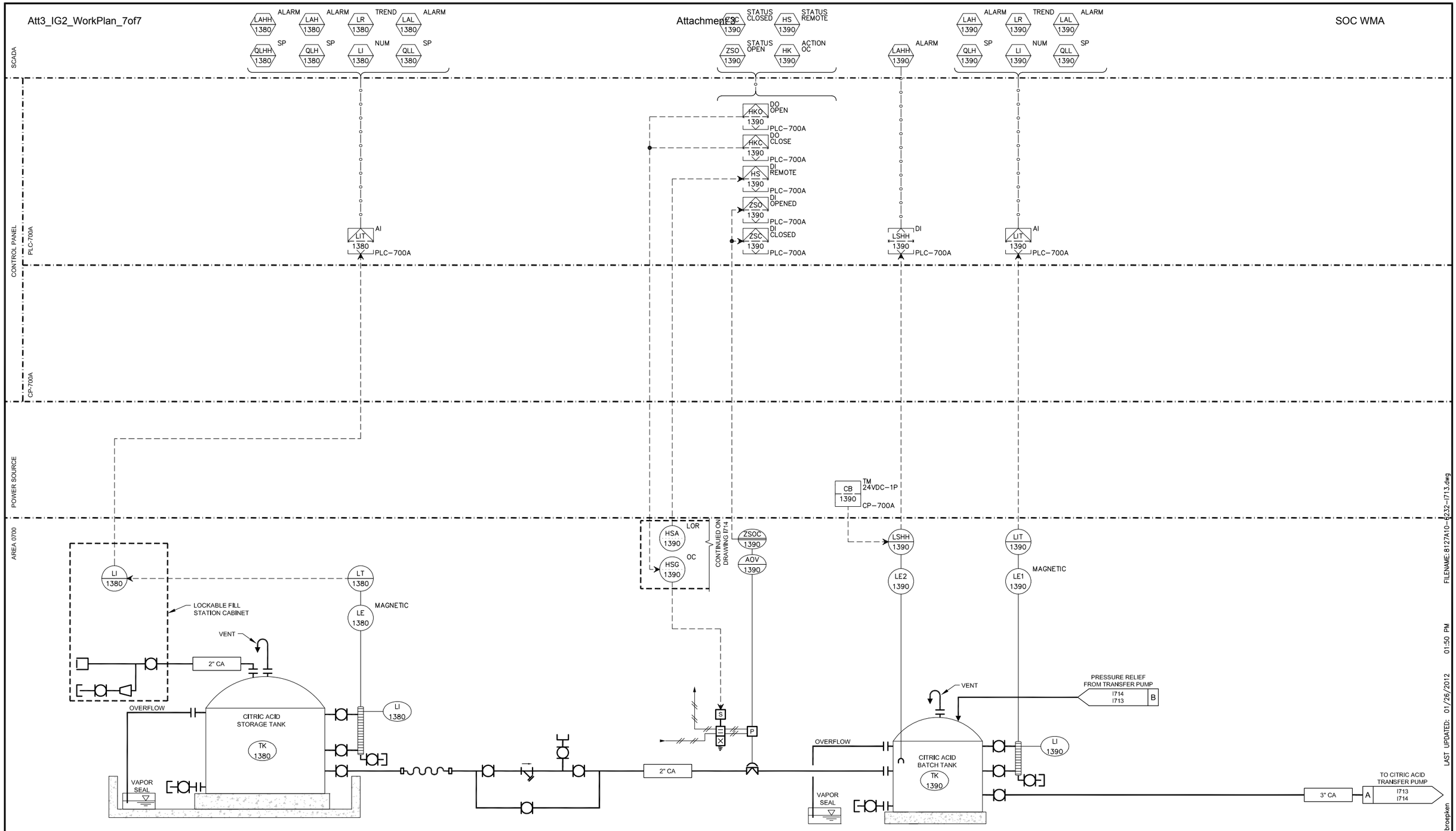

EQUIPMENT TAG NUMBERS ON THIS DRAWING ARE PRECEDED W/ **07-CA-** UNLESS OTHERWISE LABELED

LE-1380 MAGNETIC LEVEL TRANSMITTER 0-12 FT — 3 / I021

AOV-1390 ELECTRIC DISCRETE VALVE RUN OPEN/CLOSE

LE2-1390 LEVEL SWITCH — NL116 / TYP

LE1-1390 MAGNETIC LEVEL TRANSMITTER 0-3 FT — 3 / I021

FILENAME: 8127A10-R232-I713.dwg

LAST UPDATED: 01/26/2012 01:50 PM

LAST SAVED BY: broepken

No.	DATE	REVISIONS	APPROVED

DESIGNED: MGH
DRAWN: DKI
CHECKED: TAH

RBF CONSULTING

carollo

IRVINE RANCH WATER DISTRICT

JIM MEYERHOFER	RCE NO. 48451	PROJECT MANAGER	DATE
CINDY MILLER	RCE NO. 58116	PROJECT MANAGER	DATE
PATRICIA UEMATSU	RCE NO. 36762	PRINCIPAL ENGINEER	DATE

IRVINE RANCH WATER DISTRICT
BAKER WATER TREATMENT PLANT
PROJECT NO. 11218

P&ID
CITRIC ACID FEED SYSTEM-1

DRAWING I713

SHEET 628 OF 632

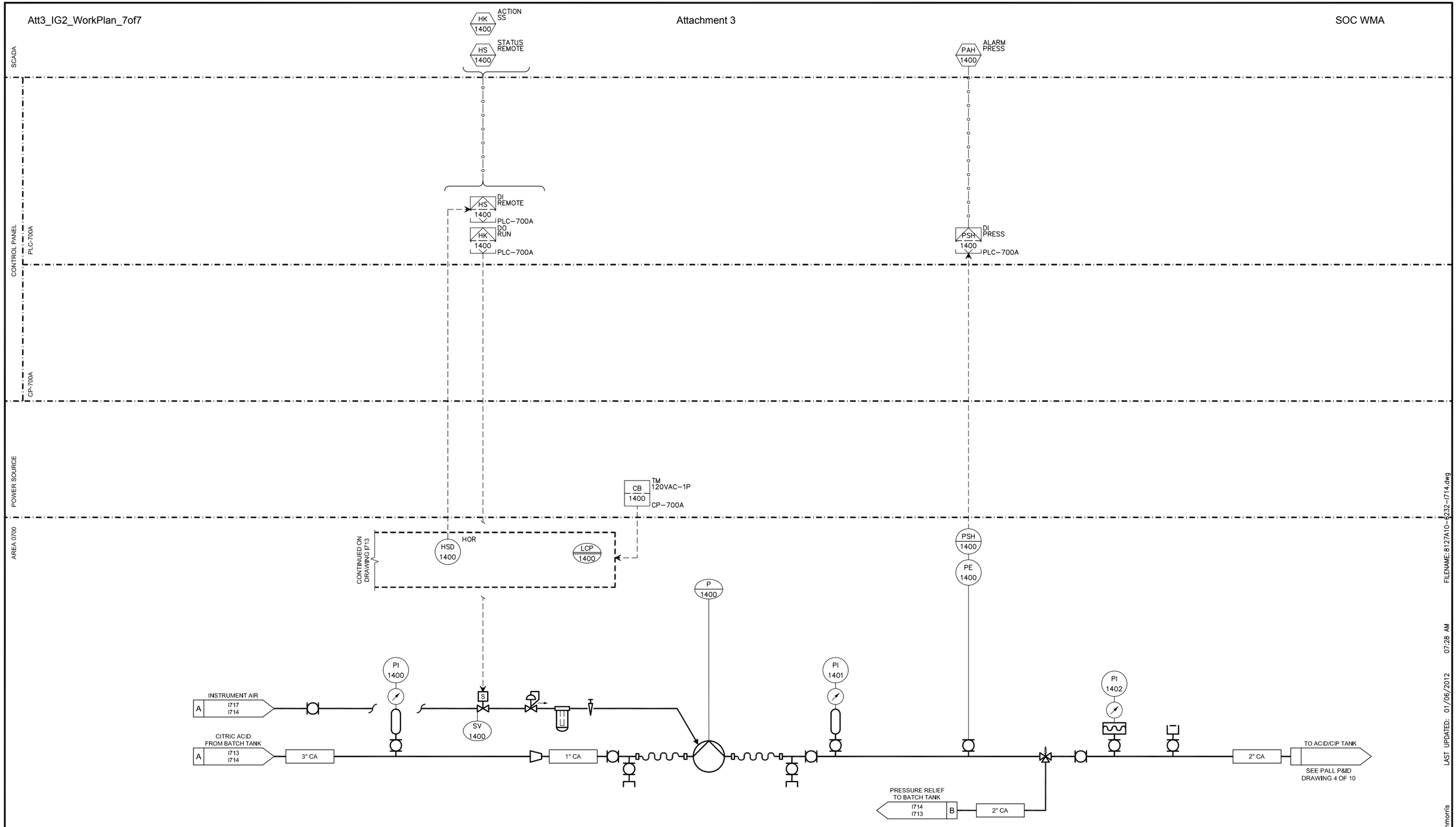

EQUIPMENT TAG NUMBERS ON THIS DRAWING ARE PRECEDED W/ **70-CA-** UNLESS OTHERWISE LABELED

PI-1400 PRESSURE INDICATOR -5 TO 10 PSIG NP110 TYP 3 I019

P-1400 CITRIC ACID TRANSFER PUMP 20 GPM @ 60 PSIG

PI-1401 PRESSURE INDICATOR 0-60 PSIG NP110 TYP

PE-1400 PRESSURE SWITCH 50 PSIG OPEN NP150 TYP

PI-1402 PRESSURE INDICATOR 0-60 PSIG NP104 TYP

No.	DATE	REVISIONS	APPROVED

DESIGNED: MGH
DRAWN: DKI
CHECKED: TAH

RBF CONSULTING

carollo

IRVINE RANCH WATER DISTRICT

JIM MEYERHOFER	RCE NO. 48451	PROJECT MANAGER	DATE
CINDY MILLER	RCE NO. 58116	PROJECT MANAGER	DATE
PATRICIA UEMATSU	RCE NO. 36762	PRINCIPAL ENGINEER	DATE

IRVINE RANCH WATER DISTRICT
BAKER WATER TREATMENT PLANT
PROJECT NO. 11218

P&ID
CITRIC ACID FEED SYSTEM-2

DRAWING I714

SHEET 629 OF 632

LAST SAVED BY: mmorris LAST UPDATED: 01/06/2012 07:28 AM FILENAME:8127A10-6232-I714.dwg

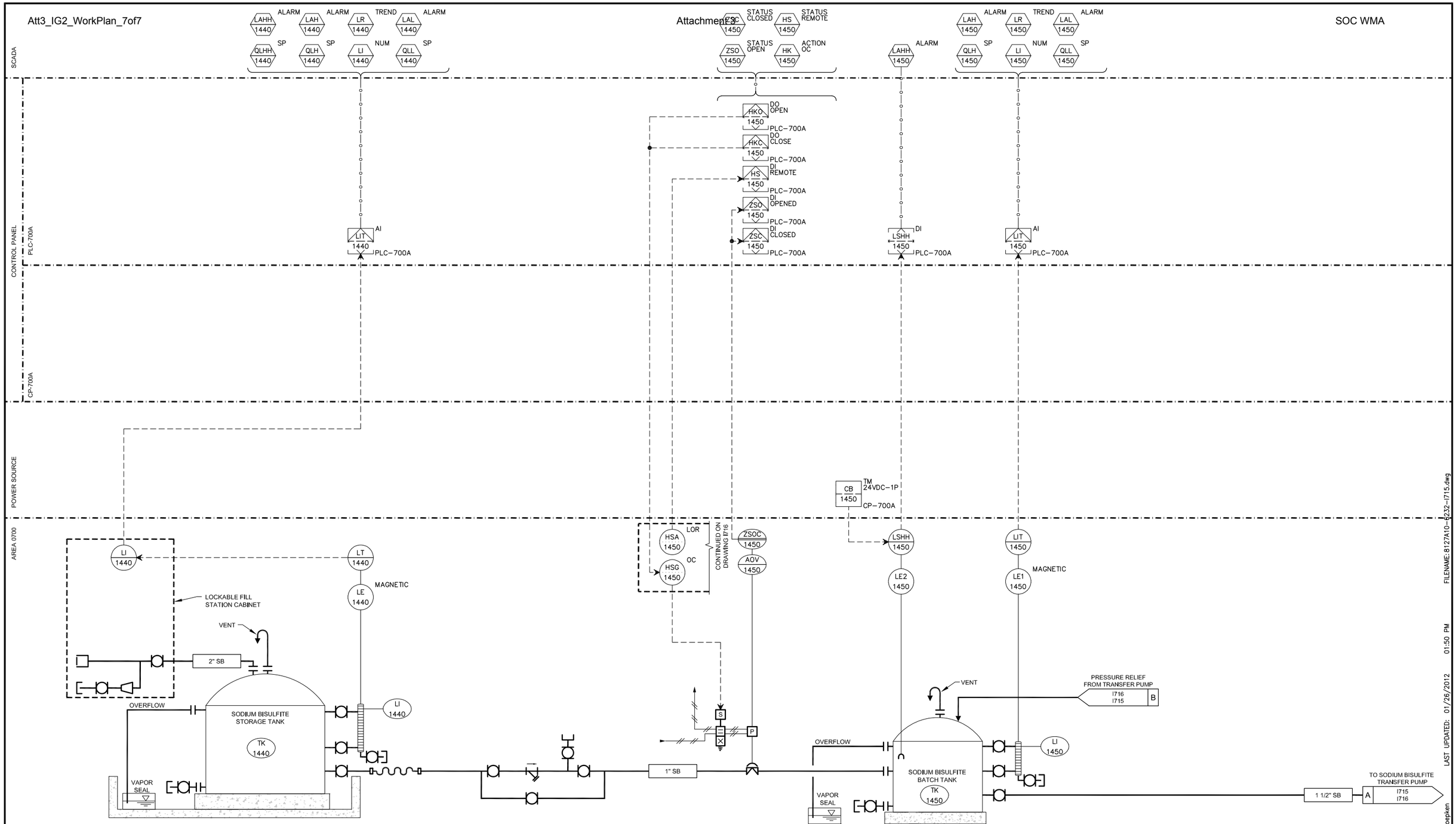

EQUIPMENT TAG NUMBERS ON THIS DRAWING ARE PRECEDED W/ **07-SB-** UNLESS OTHERWISE LABELED

LE-1440 MAGNETIC LEVEL TRANSMITTER 0-11 FT (4 / I021)

AOV-1450 ELECTRIC DISCRETE VALVE RUN OPEN/CLOSE

LE2-1450 LEVEL SWITCH (NL116 / TYP)

LE1-1450 MAGNETIC LEVEL TRANSMITTER 0-3 FT (4 / I021)

FILENAME: 8127A10-6232-I715.dwg

LAST UPDATED: 01/26/2012 01:50 PM

LAST SAVED BY: broepken

No.	DATE	REVISIONS	APPROVED

DESIGNED: MGH
DRAWN: DKI
CHECKED: TAH

RBF CONSULTING

carollo

IRVINE RANCH WATER DISTRICT

JIM MEYERHOFER	RCE NO. 48451	PROJECT MANAGER	DATE
CINDY MILLER	RCE NO. 58116	PROJECT MANAGER	DATE
PATRICIA UEMATSU	RCE NO. 36762	PRINCIPAL ENGINEER	DATE

IRVINE RANCH WATER DISTRICT
BAKER WATER TREATMENT PLANT
PROJECT NO. 11218

P&ID
SODIUM BISULFITE FEED SYSTEM-1

DRAWING I715

SHEET 630 OF 632

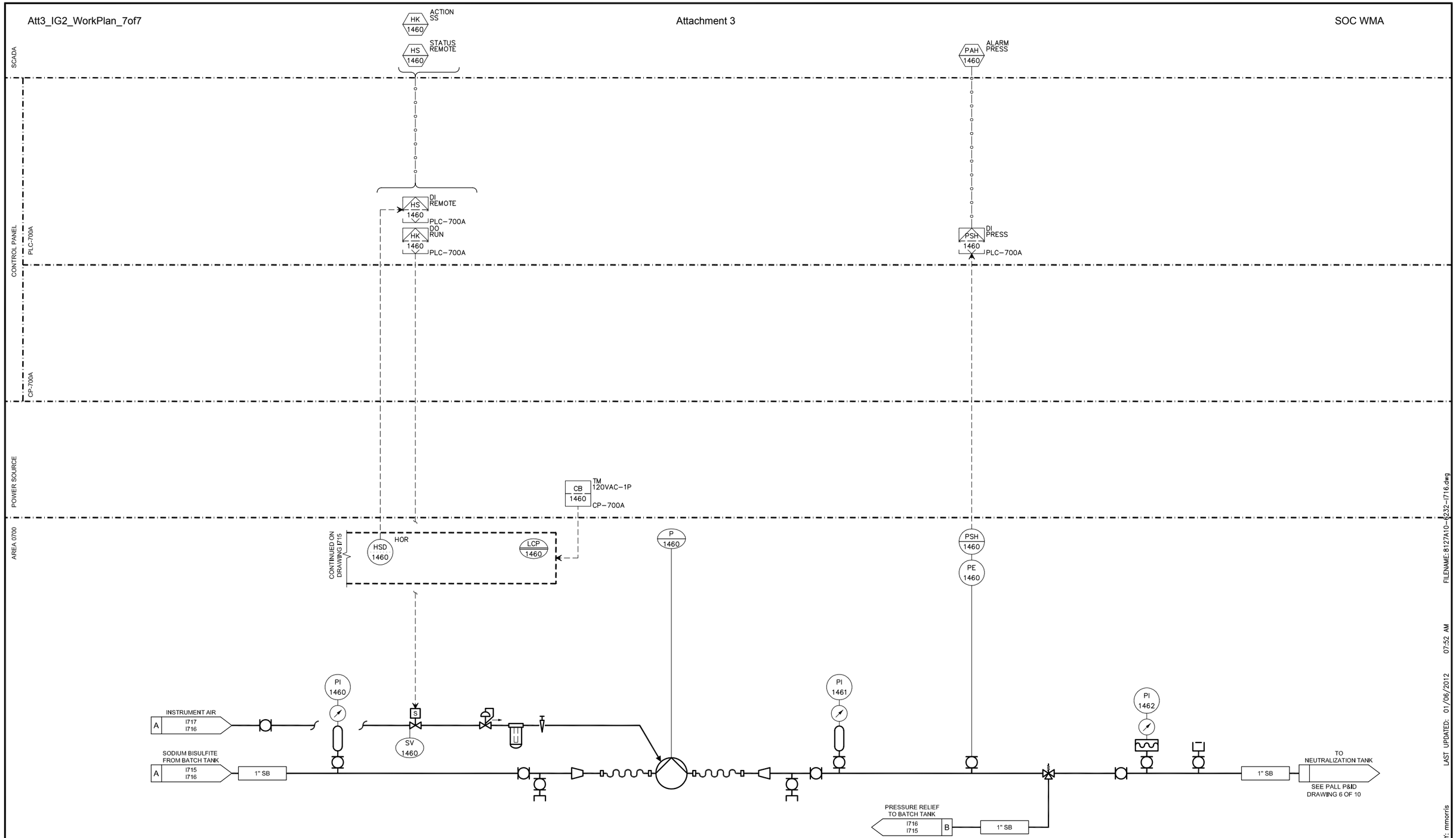

EQUIPMENT TAG NUMBERS ON THIS DRAWING ARE PRECEDED W/ **07-SB-** UNLESS OTHERWISE LABELED

PI-1460
PRESSURE INDICATOR
-5 TO 10 PSIG
NP110 / TYP
3 / I019

P-1460
SODIUM BISULFITE TRANSFER PUMP
2 GPM @ 60 PSIG

PI-1461
PRESSURE INDICATOR
0-60 PSIG
NP110 / TYP

PE-1460
PRESSURE SWITCH
50 PSIG OPEN
NP150 / TYP

PI-1462
PRESSURE INDICATOR
0-60 PSIG
NP104 / TYP

FILENAME:8127A10-6232-I716.dwg

LAST UPDATED: 01/06/2012 07:52 AM

LAST SAVED BY: mmorris

No.	DATE	REVISIONS	APPROVED

DESIGNED: MGH
DRAWN: DKI
CHECKED: TAH

RBF CONSULTING

carollo

IRVINE RANCH WATER DISTRICT

JIM MEYERHOFER	RCE NO. 48451	PROJECT MANAGER	DATE
CINDY MILLER	RCE NO. 58116	PROJECT MANAGER	DATE
PATRICIA UEMATSU	RCE NO. 36762	PRINCIPAL ENGINEER	DATE

IRVINE RANCH WATER DISTRICT
BAKER WATER TREATMENT PLANT
PROJECT NO. 11218

P&ID
SODIUM BISULFITE FEED SYSTEM-2

DRAWING I716

SHEET 631 OF 632

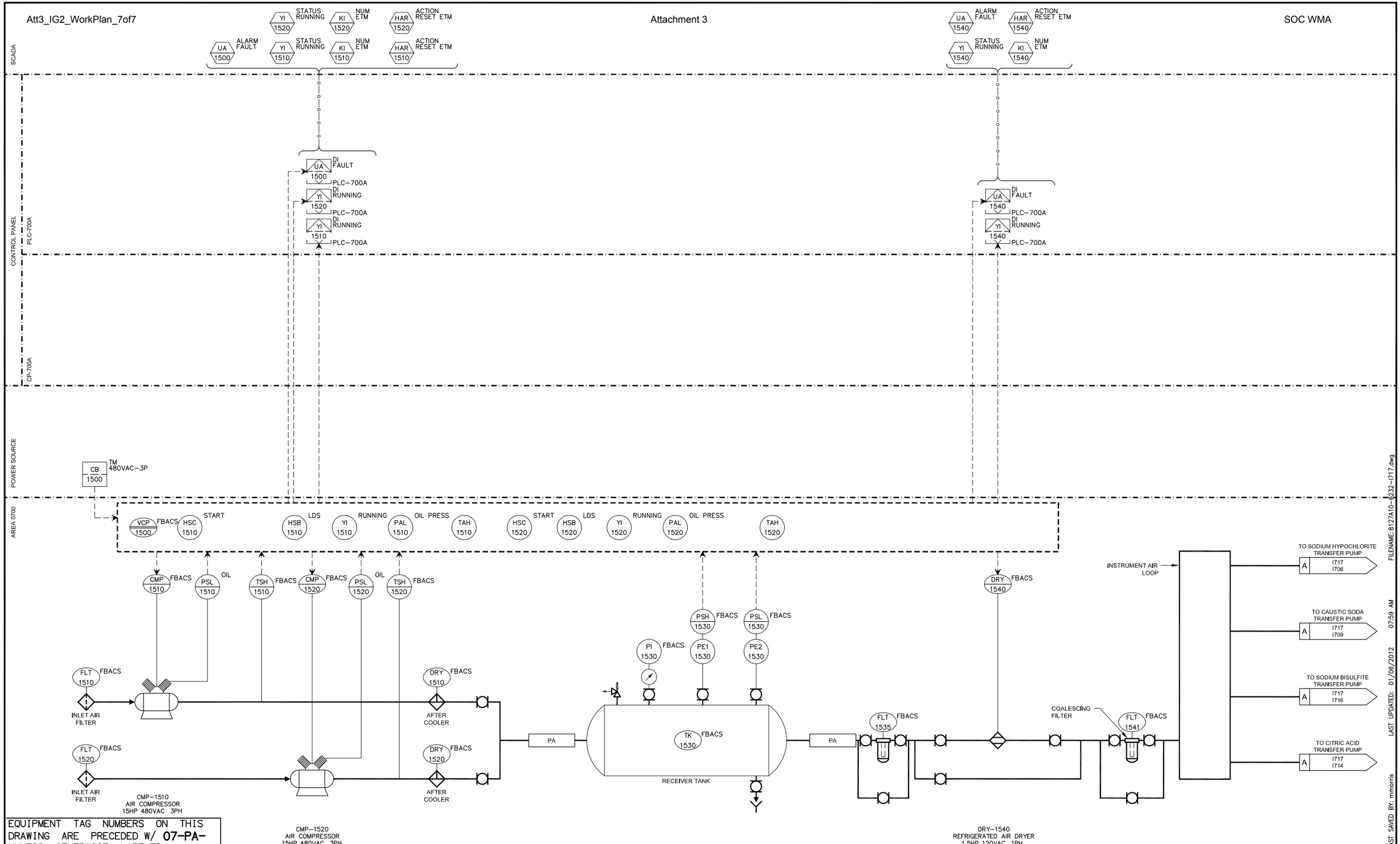

EQUIPMENT TAG NUMBERS ON THIS DRAWING ARE PRECEDED W/ **07-PA-** UNLESS OTHERWISE LABELED

No.	DATE	REVISIONS	APPROVED

DESIGNED: MGH
DRAWN: TLF
CHECKED: TAH

RBF CONSULTING

carollo

IRVINE RANCH WATER DISTRICT

JIM MEYERHOFER	RCE NO. 48451	PROJECT MANAGER	DATE
CINDY MILLER	RCE NO. 58116	PROJECT MANAGER	DATE
PATRICIA UEMATSU	RCE NO. 36762	PRINCIPAL ENGINEER	DATE

IRVINE RANCH WATER DISTRICT
BAKER WATER TREATMENT PLANT
PROJECT NO. 11218

P&ID
CHEMICAL CLEANING TRANSFER PUMP AIR SYSTEM

DRAWING I717

SHEET 632 OF 632