Municipal Water District of Orange County
18700 Ward St • Fountain Valley, CA 92708

DRAFT
2010 Regional Urban Water Management Plan

April 2011

DRAFT

Report Prepared By:

Malcolm Pirnie, Inc.

8001 Irvine Center Drive
Suite 1100
Irvine, CA 92618

Contents

Executive Summary 1

1. Introduction 1-1

1.1. Urban Water Management Plan Requirements ... 1-1
1.2. Municipal Water District of Orange County ... 1-3
1.3. Service Area ... 1-6

2. Water Demand 2-1

2.1. Overview ... 2-1
2.2. Factors Affecting Demand ... 2-3
2.2.1. Climate Characteristics ... 2-3
2.2.2. Demographics ... 2-4
2.3. Direct and Indirect Water Use ... 2-5
2.3.1. Direct Use – Municipal/Industrial and Agricultural Demands ... 2-6
2.3.2. Indirect Use – Replenishment and Barrier Demands ... 2-6
2.4. SBx7-7 Requirements ... 2-7
2.4.1. Overview ... 2-7
2.4.2. Orange County 20x2020 Regional Alliance ... 2-8
2.4.3. Steps to Calculate Regional Target ... 2-9
2.5. Demand Projections ... 2-13
2.5.1. 25 Year Projections ... 2-13
2.5.2. Low Income Household Projections ... 2-14

3. Water Sources and Supply Reliability 3-1

3.1. Overview ... 3-1
3.2. Metropolitan Water District of Southern California ... 3-3
3.2.1. Metropolitan's 2010 Regional Urban Water Management Plan ... 3-5
3.2.2. Colorado River Aqueduct ... 3-6
3.2.3. State Water Project ... 3-10
3.2.4. Central Valley/SWP Storage and Transfer Programs ... 3-15
3.2.5. Supply Reliability ... 3-18
3.2.6. MWDOC's Imported Water Supply Projections ... 3-22
3.3. Groundwater ... 3-22
3.3.1. Lower Santa Ana River Groundwater Basin ... 3-22
3.3.2. San Juan Basin ... 3-27
3.3.3. La Habra Basin ... 3-29
3.3.4. Main San Gabriel Basin (California Domestic Water Company) ... 3-29
3.3.4.1. Main San Gabriel Basin Judgment ... 3-31
3.3.5. San Mateo Basin ... 3-32
3.3.6. Laguna Canyon Basin ... 3-32
3.3.7. Impaired Groundwater ... 3-33
3.3.8. Recharge Facilities for OCWD Basin ... 3-34
3.3.9. Metropolitan Groundwater Replenishment Program ... 3-35
3.3.10. Metropolitan Conjunctive Use Program ... 3-35
3.3.11. Historical Groundwater Production ... 3-36

3.3.12. Projections of Groundwater Production ... 3-36
3.4. Surface Water ... 3-37
3.5. Recycled Water ... 3-37
3.6. Transfer and Exchange ... 3-38
3.7. Supply Reliability ... 3-38
3.7.1. Overview ... 3-38
3.7.2. Factors Contributing to Reliability ... 3-40
3.7.2.1. Water Quality ... 3-41
3.7.3. Normal-Year Reliability Comparison ... 3-42
3.7.4. Single Dry-Year Reliability Comparison ... 3-42
3.7.5. Multiple Dry-Year Reliability Comparison ... 3-43

4. Demand Management Measures 4-1

4.1. Overview ... 4-1
4.2. BMP Implementation in MWDOC Service Area ... 4-3
4.2.1. DMM 1: Water Survey Programs for Single-Family Residential and Multi-Family Residential Customers ... 4-3
4.2.2. DMM 2: Residential Plumbing Retrofit ... 4-6
4.2.3. DMM 3: System Water Audits, Leak Detection and Repair ... 4-6
4.2.4. DMM 4: Metering with Commodity Rates ... 4-7
4.2.5. DMM 5: Large Landscape Conservation Programs and Incentives ... 4-7
4.2.6. DMM 6: High-Efficiency Washing Machine Rebate Programs ... 4-9
4.2.7. DMM 7: Public Information Programs ... 4-10
4.2.8. DMM 8: School Education Programs ... 4-11
4.2.9. DMM 9: Conservation Programs for Commercial, Industrial and Institutional Accounts ... 4-13
4.2.10. DMM 10: Wholesale Agency Programs ... 4-15
4.2.11. DMM 11: Conservation Pricing ... 4-15
4.2.12. DMM 12: Water Conservation Coordinator ... 4-18
4.2.13. DMM 13: Water Waste Prohibition ... 4-18
4.2.14. DMM 14: Residential Ultra-Low-Flush Toilet Replacement Programs ... 4-18

5. Water Shortage Contingency Plan 5-1

5.1. Overview ... 5-1
5.2. Shortage Actions ... 5-1
5.2.1. Metropolitan's Water Supply Allocation Plan ... 5-1
5.2.2. MWDOC's Water Supply Allocation Plan ... 5-3
5.3. Three-Year Minimum Water Supply ... 5-5
5.4. Catastrophic Supply Interruption ... 5-7
5.4.1. Metropolitan ... 5-8
5.4.2. Water Emergency Response Organization of Orange County ... 5-8
5.5. Prohibitions, Penalties and Consumption Reduction Methods ... 5-12
5.5.1. Mandatory Water Use Prohibitions ... 5-12
5.5.2. Consumption Reduction Methods ... 5-12
5.6. Impacts to Revenue ... 5-13
5.6.1. MWDOC Incremental Water Rate ... 5-13
5.6.2. Metropolitan Tiered Supply Rate and MWDOC Melded Supply Rate ... 5-13
5.7. Reduction Measuring Mechanism ... 5-14

6. Recycled Water 6-1

6.1. Agency Coordination ... 6-1
6.2. Wastewater Description and Disposal ... 6-1
6.2.1. Overview ... 6-1
6.2.2. Orange County Sanitation District ... 6-2
6.2.3. South Orange County Wastewater Authority ... 6-3
6.3. Current Recycled Water Uses ... 6-4
6.4. Potential Recycled Water Uses ... 6-8
6.4.1. Direct Non-Potable Reuse ... 6-10
6.4.2. Indirect Potable Reuse ... 6-11
6.5. Optimization Plan ... 6-11

7. Future Water Supply Projects and Programs 7-1

7.1. Water Management Tools ... 7-1
7.2. Transfer or Exchange Opportunities ... 7-1
7.3. Planned Water Supply Projects and Programs ... 7-2
7.4. Desalination Opportunities ... 7-4
7.4.1. Groundwater Desalination ... 7-5
7.4.2. Ocean Water ... 7-6

8. UWMP Adoption Process 8-1

8.1. Overview ... 8-1
8.2. Public Participation ... 8-2
8.3. Agency Coordination ... 8-2
8.4. UWMP Submittal ... 8-4
8.4.1. Review of Implementation of 2005 UWMP ... 8-4
8.4.2. Adoption and Filing of 2010 UWMP ... 8-5

List of Tables

Table 2-1: Climate Characteristics ... 2-4
Table 2-2: Current and Projected MWDOC Service Area Population ... 2-5
Table 2-3: MWDOC Service Area Demographics ... 2-5
Table 2-4: Historical Water Demands for Direct Consumption in MWDOC's Service Area (AFY) ... 2-6
Table 2-5: Historical Water Demands for Indirect Water Use in MWDOC's Service Area (AFY) ... 2-7
Table 2-6: Members of Orange County 20x2020 Regional Alliance ... 2-8
Table 2-7: Calculation of Regional Urban Water Use Targets for Orange County 20x2020 Regional Alliance ... 2-11
Table 2-8: Urban Water Use Targets for Orange County 20x2020 Regional Alliance ... 2-11
Table 2-9: Calculation of Annual Deductable Volume of Indirect Recycled Water Entering Distribution System ... 2-13
Table 2-10: Current and Projected Water Demands in MWDOC Service Area (AFY) ... 2-14
Table 2-11: MWDOC's Demand Projections Provided to its Member Agencies (AFY) ... 2-14

Table 3-1: Metropolitan Colorado River Aqueduct Program Capabilities..... 3-10
Table 3-2: Metropolitan California Aqueduct Program Capabilities 3-15
Table 3-3: Metropolitan Central Valley/State Water Project and Transfer Programs 3-17
Table 3-4: Metropolitan Average Year Projected Supply Capability and Demands for 2015 to 2035..... 3-19
Table 3-5: Metropolitan Single-Dry Year Projected Supply Capability and Demands for 2015 to 2035..... 3-20
Table 3-6: Metropolitan Multiple-Dry Year Projected Supply Capability and Demands for 2015 to 2035..... 3-21
Table 3-7: Wholesaler Identified & Quantified Existing and Planned Sources of Water (AFY) . 3-22
Table 3-8: Current Basin Production Percentage..... 3-25
Table 3-9: Amount of Groundwater Pumped in the Past 5 Years (AFY)..... 3-36
Table 3-10: Amount of Groundwater Projected to be Pumped (AFY)..... 3-37
Table 3-11: Projected Surface Water Production in MWDOC's Service Area (AFY)..... 3-37
Table 3-12: Wholesaler Supply Reliability in Meeting Full Service Demands- % of Normal AFY 3-39
Table 3-13: Basis of Water Year Data..... 3-39
Table 3-14: Factors Resulting in Inconsistency of Supply 3-41
Table 3-15: Water Quality – Current and Projected Water Supply Impacts (AFY) 3-42
Table 3-16: Projected Normal Water Supply and Demand (AFY)..... 3-42
Table 3-17: Projected Single-Dry Year Water Supply and Demand (AFY)..... 3-43
Table 3-18: Projected Multiple Dry Year Period Supply and Demand (AFY)..... 3-43
Table 4-1: BMP Implementation Responsibility and Regional Programs in Orange County 4-2
Table 4-2: Retrofit Improvement Designations..... 4-4
Table 4-3: California Friendly Landscape Training Program Residential Participation Summary4-6
Table 4-4: Landscape Performance Certification Program in MWDOC's Service Area 4-8
Table 4-5: California Friendly Landscape Training Program Commercial Participation Summary 4-9
Table 4-6: Retrofit Devices and Rebate Amounts Available Under Save Water Save a Buck Program..... 4-13
Table 4-7: Summary of Rate Structure Types Used in Orange County..... 4-15
Table 4-8: List of Participating Agencies..... 4-18
Table 5-1: Metropolitan Three-Year Analysis..... 5-7
Table 5-2: Three-Year Estimated Minimum Water Supply..... 5-7
Table 5-3: WEROC Preparation Actions for a Catastrophe 5-10
Table 6-1: Wastewater Collection and Treatment (AFY) 6-2
Table 6-2: Disposal of Wastewater (Non-Recycled) (AFY)..... 6-2
Table 6-3: Current Recycled Water Uses (AFY) 6-8
Table 6-4: Projected Future Use of Recycled Water in Service Area (AFY)..... 6-10
Table 6-5: Projected Recycled Water Uses (AFY)..... 6-10
Table 6-6: Recycled Water Uses – 2005 Projections compared with 2010 Actual (AFY)..... 6-10
Table 7-1: Specific Planned Water Supply Projects and Programs..... 7-4
Table 7-2: Opportunities for Desalinated Water..... 7-5
Table 8-1: External Coordination and Outreach..... 8-1
Table 8-2: Coordination with Appropriate Agencies..... 8-3

List of Figures

Figure 1-1: Regional Location of Urban Water Supplier..... 1-8
Figure 1-2: Water Service Organization in MWDOC's Service Area 1-9
Figure 2-1: Historical Demand and Population in MWDOC's Service Area..... 2-2
Figure 3-1: Schematic of Water Supply Sources in Orange County..... 3-1
Figure 3-2: Current and Projected Water Supplies for MWDOC Service Area (AFY) 3-2
Figure 3-3: Major Aqueducts Bringing Water to Southern California..... 3-4
Figure 3-4: Metropolitan Feeders and Transmission Mains Serving Orange County..... 3-5
Figure 3-5: Lower Santa Ana Groundwater Basin..... 3-23
Figure 3-6: San Juan Basin..... 3-27
Figure 3-7: Main San Gabriel Basin 3-31

Appendices

A. Urban Water Management Planning Act of 1983, as amended
B. Basis of Water Year Data for Single Dry and Multiple Dry Year Hydrologies
C. California Urban Water Conservation Council BMP Implementation Report 2009-10 for MWDOC
D. Urban Water Management Plan Checklist
E. MWDOC Water Shortage Allocation Plan
F. Letters of Notification of Intent to Update UWMP sent to member agencies
G. Notice of Public Hearing
H. Records of the Public Hearing
I. Resolution of Adoption of MWDOC 2010 RUWMP

Acronyms Used in the Report

ABC	Full text equivalent of the acronym goes here

Message from the Board of Directors

Since the Municipal Water District of Orange County's (MWDOC) formation in 1951, MWDOC has remained steadfast in its commitment to provide a reliable supply of high-quality water for Orange County at a reasonable rate. Through leadership, representation at Metropolitan and collaboration with our member agencies, MWDOC seeks opportunities to improve Orange County's water resources and reliability. By integrating local planning challenges and regional stakeholder partnerships, MWDOC maximizes water system reliability and overall system efficiencies. MWDOC works to expand Orange County's water supply portfolio by providing planning and local resource development in the areas of recycled water, groundwater, ocean water, and water-use efficiency.

DIRECTORS

Division 1 Brett R. Barbre
Brea, Buena Park, La Habra, La Palma, Yorba Linda Water District, and portions of Golden State Water Company

Division 2 Larry D. Dick
Orange, Tustin, East Orange County Water District, portions of Golden State Water Company, Serrano Water District, portions of Garden Grove, and portions of Irvine Ranch Water District

Division 3 Ed Royce, Sr.
Fountain Valley, Westminster, portions of Golden State Water Company, and portions of Garden Grove

Division 4 Joan C. Finnegan
Huntington Beach, Seal Beach, and Mesa Consolidated Water District

Division 5 Wayne A. Clark
Newport Beach and portions of Irvine Ranch Water District and El Toro Water District

Division 6 Jeffery M. Thomas
Santa Margarita Water District, Trabuco Canyon Water District, and portions of Irvine Ranch Water District

Division 7 Susan Hinman
San Clemente, San Juan Capistrano, Moulton Niguel Water District, Laguna Beach County Water District, and South Coast Water District

Mission Statement
"To provide reliable, high-quality supplies from Metropolitan Water District of Southern California and other sources to meet present and future needs, at an equitable and economical cost, and to promote water use efficiency for all of Orange County."

Executive Summary

Background and Purpose

Enacted in 1983, the Urban Water Management Planning Act (Act) requires every urban water supplier providing water for municipal purposes either directly or indirectly to more than 3,000 customers or supplying more than 3,000 acre-feet of water annually to prepare and adopt an urban water management plan at least once every five years. The Municipal Water District of Orange County (MWDOC), a water wholesaler and regional planning agency, fits the defined criteria and has prepared its 2010 Regional Urban Water Management Plan (Plan) to address all the requirements set forth in the *State of California Water Code* Section 10610 through 10657.

Since its passage, many amendments have been added to the Act. These changes are intended to encourage increased regional planning and the cooperative management of California's most precious commodity – water. As a result, urban water management plans have evolved to become the following:

- Foundational documents and sources of information for Water Supply Assessments (*California Water Code* Section 10613) and Written Verifications of Water Supply (*California Water Code* Section 66473.7);
- Long-range planning documents for water supply;
- Long-range planning documents for water use efficiency;
- Source data for the development of regional water plans;
- Source documents for cities and counties preparing their General Plans;
- Key components of Integrated Regional Water Management Plans; and
- A condition of eligibility for receipt of certain State grant funds.

For MWDOC, the benefits of updating its Plan extend beyond legislative compliance. The regional approach of documenting water-service planning allows MWDOC to do all of the following:

- Evaluate supply-reliability goals for the region and provide a comprehensive assessment of water resource needs in its service area;
- Provide a regional perspective on current and proposed water use efficiency goals and programs, and identify cost-effective measures that can be accomplished;
- Provide assistance to maximize the beneficial use of recycled water and other local resource supplies that reduce the need for imported supplies; and

- Offer opportunities for public participation through publicly-noticed meetings and provide information that will allow the public to gain a better understanding of the region's comprehensive water planning.

The region served by MWDOC is located in Orange County, California and includes 26 cities and water districts, referred to as MWDOC member agencies. Since MWDOC is a wholesaler of imported water for the region, it has taken a regional approach in compiling this Plan for the purpose of providing a comprehensive assessment of the region's water services, sources and supplies. This Plan documents information on all sources of water supplies for the region – imported water, groundwater, surface water, recycled water, and wastewater – as a summary of information for regional planning.

MWDOC is a member agency of the Metropolitan Water District of Southern California. Metropolitan is a consortium of 28 cities and water districts that provides supplemental potable water supplies imported from the Colorado River Aqueduct (CRA) and State Water Project (SWP) to parts of Southern California. MWDOC purchases imported water from these sources from Metropolitan and distributes the water to its member agencies, which provide retail water services to the public. MWDOC currently only supplies imported water from Metropolitan Water District of Southern California (Metropolitan) as a source of water to the region. While MWDOC is not currently responsible for any of the projects or sources other than imported supply discussed in this Plan, it actively supports development of local water supply projects and sources.

Plan Findings

Water Service Reliability

Based on the preliminary information gathered, the Plan concludes that the MWDOC service area will have sufficient existing and planned supplies to meet full service demands under every water-year hydrologic scenario from 2015 through 2035. This does not necessarily mean that moving into water supply allocations to deal with specific water shortage situations will never be necessary. At times, water supply allocations may be necessary to preserve storage to meet demand over prolong periods of drought.

Retail consumptive demand is projected to grow at a slower rate of 0.5% per year compared to historical demand growth of 1.54% per year. Water demand for municipal and industrial use is projected to grow from approximately 485,000 acre-feet per year (AFY) at the present time to nearly 568,000 AFY in 2035.

The Water Conservation Bill of 2009 (SBx7-7), the water conservation component to the Delta legislative package, requires each urban retail water supplier to develop urban water use targets to help meet the goal to reduce the statewide average per capita daily water consumption by 20% by 2020 and the interim reduction goal of 10% by 2015. The

retail agency may choose to comply with SBx7-7 as an individual or as a region in collaboration with other water suppliers. MWDOC and 26 of its member agencies as well as the cities of Anaheim, Fullerton, and Santa Ana have created the Orange County 20x2020 Regional Alliance in an effort to help these agencies meet the water use reduction targets required by SBx7-7. With a regional alliance, the entire region is able to benefit from regional investments such as the Orange County Water District (OCWD) and Orange County Sanitation District's (OCSD) Groundwater Replenishment System (GWRS), recycled water, and water use efficiency. Under this approach, MWDOC estimates the interim regional target for Orange County would be 174.1 gallons per capita per day (GPCD) in 2015 and the final target would be 156.5 GPCD in 2020.

This Plan also evaluates each source of water in the region. The resource mix for meeting total demand includes local groundwater, recycled water, surface water, and imported water from Metropolitan. The Plan documents MWDOC's cooperative efforts with its member agencies in developing local supplies. In fact, the region anticipates that the percentage of its supply from each source will remain approximately the same for the next 25 years, with 45% of its supplies from imported water and 55% of its supplies from local sources in 2035, even with projected growth occurring.

Additionally, the Plan compares the region's supply and demand to determine water service reliability under different climatic conditions – types of water years. The Plan first establishes the hydrologic conditions that define the types of water years in the MWDOC region by considering a combination of the following three variables:

1. Total retail demand of the water year;
2. Local supply condition of the water year; and
3. Imported supply condition of the water year.

Imported-supply demand typically increases during dry years when the weather is hot and there is a decrease in local runoff. Furthermore, in its Regional Urban Water Management Plan (RUWMP), Metropolitan demonstrated it has developed flexible water supplies through transfers and storage programs designed to increase its resources during dry water year conditions. As a result, the water year is defined by the net difference of total retail demand less local supplies. The greater the net difference, the more critical it is for MWDOC to depend on imported supply. Using this approach, types of water years in the region are defined as follows:

- Normal Water Year: average of 83 years, representing the historical hydrology from 1922 to 2004;
- Single Dry Water Year: 1977 hydrology (yields the highest one year demand for imported supply); and
- Multiple Dry Water Years: 1990 to 1992 (a sequence that yields the highest three-year demand for imported supply).

When comparing supply and demand under these defined water years, the region is projected to maintain full service demand under each type of water year. Under single dry water years, retail demand is expected to increase by 6.6%. Local supplies are expected to remain consistent in a single dry year, while imported supply is expected to increase to compensate for the wide gap between retail demand and local supply. When assessing the water supply reliability for the region, MWDOC used an inference approach to conclude that Metropolitan is capable of supplying imported water to meet the full service demand projected by MWDOC under various hydrologic conditions. In its 2010 Regional Urban Water Management Plan (November 2010), Metropolitan was able to demonstrate it can maintain reliability in meeting firm demands under a normal hydrologic year, the single-driest hydrologic year, and a series of multiple dry years from 2015 through 2035. By inference, MWDOC determined the availability of its imported supply should equate to its projected imported demand. Thus, MWDOC concludes Metropolitan will meet imported demand for direct consumption projected by MWDOC under this 2010 Plan.

The Plan also discusses potential sources of water supply that are being investigated by MWDOC and its member agencies to diversify the region's water supply portfolio. Water transfers and exchange and ocean water desalination are two potential sources of supply that are discussed as part of MWDOC's long-term resource evaluation. MWDOC and some of its member agencies are now developing long-term relationships with water suppliers in Northern California. These relationships may lead to mutually beneficial transfer agreements in the near future. The Plan also discusses potential ocean desalination projects in the region: the Huntington Beach Seawater Desalination Project; the South Orange Coastal Ocean Desalination Project; and the Camp Pendleton Seawater Desalination Project.

Impact of Water Quality on Water Service Reliability

Water quality evaluation is based on known contaminants applicable to local and imported supplies by three levels of standards:

- Primary Drinking Water Standards (health)
- Secondary Drinking Water Standards (aesthetics)
- Notification Levels (not yet regulated contaminants)

After evaluating the water quality in the region, the Plan concludes that current management strategies have accounted for all known and foreseeable water quality impacts. The region does not anticipate that any water quality issues would either reduce supply availability or could not be handled through existing management strategies.

Water Conservation Program

As a wholesaler, MWDOC is committed to developing and implementing regional water use efficiency and water conservation programs on behalf of its retail water agencies and their customers. This regional approach enables economies of scale, ensures a consistent message to the public, and assists in the acquisition of grant funding for program implementation.

To facilitate the implementation of Best Management Practices (BMPs) throughout Orange County, MWDOC focuses its effort on the following three areas:

- Regional Program Implementation: MWDOC develops, obtains funding for, and implements regional BMP programs on behalf of all retail water agencies in its service area.
- Local Program Assistance: Upon request, MWDOC assists retail agencies in developing and implementing local programs within their individual service areas. MWDOC provides assistance with a variety of local programs including, but not limited to: Home Water Surveys, Landscape Workshops (residential and commercial), Public Information, School Education, Conservation Pricing, and Water Waste Prohibitions.
- Research and Evaluation: An integral component of any water use efficiency program is the research and evaluation of potential and existing programs. In the past five years, MWDOC has conducted research that allows agencies to measure the water-savings benefits of a specific program and then compare those benefits to the costs of implementing the program. This cost/benefit analysis enables individual agencies to evaluate the economic feasibility of a program prior to its implementation.

Wastewater Management and Water Recycling

Currently, the region collects nearly 345,000 acre-feet of wastewater per year; 12% of that wastewater is used for recycled water supply. The remainder is disposed through ocean outfalls. However, the Plan projects the amount of recycled water supply will increase in the future. The amount of wastewater is expected to grow to approximately 440,000 AFY in 2035, with 37% expected to be treated for recycled use and the rest disposed through ocean outfalls.

Recycled water is a significant, reliable source of supply and its expanded use in the future is examined. The mechanisms encouraging recycled water use include the following:

- Assisting retail agencies to secure funding from local, state, and federal agencies;
- Promoting partnerships to encourage water recycling projects (e.g., the GWRS);

- Encouraging regulatory agencies to streamline permitting requirements;
- Lobbying for state and federal assistance for the construction of brine lines to offset the cost of brine disposal; and
- Supporting research that addresses public concerns on recycled water use, develops new technology for cost reduction, and assesses health effects to protect the public.

Water Shortage Contingency Plan

During water shortages, MWDOC works with its member agencies to manage the water supply in the region to ensure it meets the demands of its member agencies. Water shortages may result from variations in weather, natural disasters, or unanticipated situations (e.g., system failures, acts of terror). During a severe water shortage (Stage 7 supply reduction as defined in Metropolitan's Water Surplus and Drought Management [WSDM] Plan), the MWDOC Board is responsible for allocating imported water from Metropolitan. The Metropolitan Water Shortage Allocation Plan (WSAP) includes the specific formula for calculating member agency supply allocations and the key implementation elements needed for administering an allocation should Metropolitan be unable to meet the "firm demands" (non-interruptible demands) of its member agencies. MWDOC's WSAP uses the same principles as identified in Metropolitan's WSAP for the allocation of imported water to its member (retail) water agencies, subject to any locally developed principles which would be developed in consultation with the retail agencies.

In the early 1980s, three regional water agencies – MWDOC, Coastal Municipal Water District (later merged with MWDOC), and OCWD – jointly formed the Water Emergency Response Organization of Orange County (WEROC) to coordinate emergency response through Orange County water and wastewater agencies. Details of a catastrophic supply interruption plan developed through WEROC are discussed in Section 5.4 of the Plan.

Coordination

It is important to note that Metropolitan and many of MWDOC's retail member agencies are also required to prepare urban water management plans on the same schedule. As a result, MWDOC recognizes that close coordination among its wholesale agency and MWDOC's retail member agencies is a key to the success of its Plan.

The MWDOC Plan is meant to aggregate the planning information in a meaningful way so the public can better understand water resource planning on the regional level. Every effort has been made to coordinate information with local retail agencies' plans to avoid any significant discrepancies in facts, figures, and estimates contained in each local urban water management plan. To that end, much of the information presented the MWDOC

Plan is based on the best available information at the time of drafting. To the extent that any discrepancies exist, the local retail agency urban water management plan governs.

Plan Summary and Adoption

Based on the data compiled in this Plan, water service in the MWDOC region is expected to meet full service demands from 2015 through 2035. The Plan also finds that the region is continuing to improve its water reliability by designing programs to protect and ensure water quality, maximize local supplies, promote conservation, encourage recycled water use, and meet its demands during shortages.

In compliance with *California Water Code* Section 10644(b), MWDOC is required to file this Plan with the Department of Water Resources (DWR) on or before December 31, 2010. However, both retail and wholesale water agencies have been provided an extension to adopt the Plan by July 1, 2011 and submit it to DWR within 30 days of adoption to allow sufficient time to develop water use targets and an interim water use target to increase water use efficiency as required by SBx7-7.

1. Introduction

1.1. Urban Water Management Plan Requirements

Water Code Sections 10610 through 10656 of the Urban Water Management Planning Act (Act) requires "every urban water supplier providing water for municipal purposes to more than 3,000 customers or supplying more than 3,000 acre-feet of water annually" to prepare, adopt, and file an urban water management plan (UWMP) with the California Department of Water Resources (DWR) every five years in the years ending in zero and five. A copy of the Act is included in Appendix A. The Water Conservation Bill of 2009 (SBx7-7) provided a 6-month extension for the 2010 UWMPs to allow time for DWR to prepare information related to target methodology for the goal to reduce the statewide average per capita daily water consumption by 20% by 2020 and for retail water agencies to respond to this requirement. Therefore, the 2010 UWMP updates are to be adopted no later than July 1, 2011 and are due to DWR within 30 days of adoption.

This Municipal Water District of Orange County (MWDOC) 2010 Regional Urban Water Management Plan (Plan) provides information on the present and future water resources and demands in MWDOC's service area and provides an assessment of MWDOC's water resource needs. Specifically, this Plan provides water supply planning for a 25-year planning period in 5-year increments. The Plan identifies water supplies for existing and future demands, quantifies water demands during normal year, single-dry year, and multiple-dry years, and identifies supply reliability under the three hydrologic conditions. The MWDOC 2010 Plan update revises the 2005 Plan. This Plan has been prepared in compliance with the requirements of the Act as amended in 2009, and includes the following discussions:

- Water Service Area and Facilities
- Water Sources and Supplies
- Water Use by Customer Type
- Demand Management Measures
- Water Supply Reliability
- Planned Water Supply Projects and Programs
- Water Shortage Contingency Plan
- Recycled Water

Since its passage in 1983, several amendments have been added to the Act. The most recent changes affecting the 2010 UWMP include SBx7-7 as part of the Seventh Extraordinary Session and SB 1087. SBx7-7, enacted in 2009, is part of the Delta package. It stemmed from the Governor's vision to achieve a 20% statewide reduction in urban per capita daily water use by 2020. SBx7-7 requires each urban retail water

supplier to develop urban water use targets to help meet the 20% goal by 2020 and an interim 10% goal by 2015. Each urban retail water supplier must include in its 2010 UWMPs the following information from its target-setting process:

- Baseline daily per capita water use
- 2020 Urban water use target
- 2015 Interim water use target
- Compliance method being used along with calculation method and support data
- An implementation plan to meet the targets

Wholesale water suppliers such as MWDOC are required to include an assessment of present and proposed future measures, programs, and policies that would help achieve the 20% water use reduction by 2020 goal.

In effort to assist retail agencies in Orange County to meet the requirement of SB7x7, the MWDOC 2010 Plan will describe the Orange County Regional Alliance and methodology used to calculate the regional targets for 2015 and 2020.

The other recent amendment made to the Act is set forth in SB 1087, Water and Sewer Service Priority for Housing Affordable to Low-Income Households. SB 1087 requires water and sewer providers to grant priority for service allocations to proposed developments that include low income housing. SB 1087 also requires UWMPs to include projected water use for single- and multi-family housing needed for low-income households.

This 2010 Plan update also incorporates MWDOC's current and planned water use efficiency efforts pursuant to the *Memorandum of Understanding Regarding Urban Water Conservation in California* (MOU).[1] MWDOC became a signatory and adopted the MOU in 1991.

An UWMP may serve as a foundational document and source of information for a Water Supply Assessment, (Water Code Section 10613), and a Written Verification of Water Supply, (Water Code Section 66473.7). Both statutes require detailed information regarding water supply availability to be provided to city and county decision makers prior to approval of specified large development projects. Additionally, an UWMP also serves as a:

- Long-range planning document for water supply;

[1] The *Memorandum of Understanding Regarding Urban Water Conservation in California* (MOU) was adopted in September 1991 by a large number of water suppliers, public advocacy organizations and other interested groups. It created the *California Urban Water Conservation Council* and established 16 Best Management Practices (BMPs) for urban water conservation, recently refined to 14 BMPs.

- Long-range planning documents for water use efficiency;
- Source data for development of a regional water plan;
- Source document for cities and counties, as they prepare their General Plans;
- Key component of an Integrated Regional Water Management Plan; and
- Condition to qualify for receipt of certain State grant funds.

For MWDOC, the activities associated with the update of its Plan and the benefits the Plan ultimately affords its local retailers extend far beyond the implied or stated supply-reliability goals. The regional approach allows MWDOC to do the following:

- Provide a comprehensive assessment of water resource needs in its service area;
- Provide guidance to coordinate implementation of water conservation programs in a cost-effective manner;
- Provide assistance to maximize the beneficial use of recycled water and local groundwater supplies, providing the region with new sources of local water to reduce the need for imported supplies from the Metropolitan Water District of Southern California (described in the next section); and
- Offer opportunities for public participation through publicly noticed meetings, and provide information that will allow the public to gain further understanding of the region's comprehensive water planning.

The sections in this Plan correspond to the outline of the Act, specifically Article 2, Contents of Plans, Sections 10631, 10632, and 10633. The sequence used for the required information, however, differs slightly in order to present information in a manner reflecting the unique characteristics of MWDOC's water utility. The UWMP Checklist has been completed, which identifies the location of Act requirements in this Plan and is included as Appendix D.

1.2. Municipal Water District of Orange County

Formation and Purpose

Orange County was settled around areas of surface water. San Juan Creek supplied the mission at San Juan Capistrano. Santa Ana River supplied the early cities of Anaheim and Santa Ana. The Santa Ana River also provided water to a large aquifer underlying the northern half of the county, enabling settlers to move away from the river's edge and still obtain water by drilling wells.

By the early 1900s, Orange County residents understood that their water supply was limited, the rivers and creeks did not flow all year long, and the aquifer would eventually be degraded or even dry up if the water was not replenished on a regular basis.

In 1928, the cities of Anaheim, Santa Ana, and Fullerton joined with 10 other Southern California cities to form the Metropolitan Water District of Southern California (Metropolitan). Their objective was to build an aqueduct to the Colorado River to provide the additional water necessary to sustain the growing Southern California economy and its enviable lifestyle.

The Orange County Water District (OCWD) was formed in 1933 to protect the County's water rights on the Santa Ana River. Later that mission was expanded to manage the underground aquifer, making optimum use of local supplies and augmenting those with imported supplies provided through the Metropolitan member agencies in Orange County.

It was not long before other parts of Orange County also saw the need for supplemental supplies. A severe drought in the late 1940s further emphasized this need for coastal communities from Newport Beach to San Clemente. In 1948, coastal communities from Newport Beach south to the San Diego county line formed the Coastal Municipal Water District as a way to join in the benefits provided by Metropolitan.

MWDOC was formed by Orange County voters in 1951 under the Municipal Water District Act of 1911. Today, MWDOC is Metropolitan's third largest member agency, providing and managing the imported water supplies used within its service area.

The Coastal Municipal Water District became a part of MWDOC in January 2001, a move that streamlined local government and allowed MWDOC to more efficiently provide wholesale water services at a reduced cost for the benefit of residents living throughout the service area.

Relationship to Metropolitan Water District of Southern California

MWDOC became a member agency of Metropolitan in 1951 to bring supplemental imported water supplies to parts of Orange County. Metropolitan is a consortium of 26 cities and water agencies that provides supplemental water supplies to parts of Los Angeles, Orange, San Diego, Riverside, San Bernardino, and Ventura Counties. Metropolitan's two main sources of supply are the Colorado River and Sacramento-San Joaquin Bay-Delta. Supplies from these sources are delivered to Southern California via the Colorado River Aqueduct (CRA) and State Water Project (SWP). MWDOC purchases imported water from these sources from Metropolitan and distributes the water to its member agencies, which provide retail water services to the public.

MWDOC Board of Directors

MWDOC is governed by an elected seven-member Board of Directors, each board member representing a specific area of the County. Each director is elected to a four-year

term by voters who reside within one of the seven divisions within the MWDOC service area.

Each director is a member of at least one of the following three standing committees: Planning and Operations; Administration and Finance; and Public Affairs and Legislation. Each committee meets monthly. The full board convenes for its regular monthly meeting on the third Wednesday of the month, and holds a Board workshop on Metropolitan issues the first Wednesday of the month.

The president of the board, vice president, and immediate past president also comprise the Executive Committee, which meets monthly with the general manager, assistant general manager, and board secretary.

Goals and Objectives

MWDOC's Mission Statement: *To provide reliable, high-quality supplies from Metropolitan Water District of Southern California and other sources to meet present and future needs, at an equitable and economical cost, and to promote water use efficiency for all of Orange County.*

Related water management goals and objectives include:

- Represent the interests of the public within its jurisdiction;
- Appoint its representative directors to the Board of Metropolitan;
- Inform its directors and its member agencies about Metropolitan issues;
- Guide Metropolitan in its planning efforts and act as a resource of information and advocacy for member agencies;
- Purchase of water from Metropolitan and advocacy representation of the member agencies at Metropolitan;
- Work together with Orange County water agencies and others to focus on solutions and priorities for improving Orange County's future water supply reliability;
- Cooperate with and assist OCWD and other agencies in coordinating the balanced use of the area's imported and native surface and groundwater;
- Plan and manage the allocation of imported water to its member agencies during periods of shortage;
- Coordinate and facilitate the resolution of water issues and development of joint water projects among its member agencies;
- Represent the public and assist its member agencies in dealing with other governmental entities at the local, regional, state, and federal levels on water-related issues; and
- Inform its member agencies and inform and educate the general public on matters affecting present and future water use and supply.

As a regional wholesaler, MWDOC's most significant roles are broadly applicable to all of its member agencies. A key goal of MWDOC is to provide services and programs that are broad-reaching that the retail agencies cannot reasonably provide as single entities.

One major area in which MWDOC works with other agencies to manage Orange County's water supply is water use efficiency. In terms of water management, MWDOC became a signatory to the Memorandum of Understanding (MOU) in 1991, monitored by the California Urban Water Conservation Council (CUWCC), which outlines 14 Best Management Practices (BMP) for urban water use efficiency. The urban water use efficiency practices are intended to reduce long-term urban demands from what they would have been without implementation of these practices, and are in addition to programs that may be instituted during occasional water supply shortages.

For more than 30 years, MWDOC's Public Information and Water Education programs have reached thousands of consumers and nearly 90,000 Orange County students annually. The programs are performed on behalf of, and in coordination with, MWDOC's member agencies and are designed to facilitate a student's understanding of current water issues, as well as the challenges, opportunities, and costs involved in securing a reliable supply of high quality water.

In 2004, MWDOC formed a partnership with the Discovery Science Center to bring the School Education Program to even more students and provide them with even greater educational experiences in the areas of water and science.

1.3. Service Area

MWDOC is a regional water wholesaler and resource planning agency, managing all of Orange County's imported water supply with the exception of water imported to the cities of Anaheim, Fullerton, and Santa Ana. MWDOC serves more than 2.3 million residents in a 600-square-mile service area (see Figure 1-1 below). Its commitment is to ensure water reliability for the communities it serves. To that end, MWDOC focuses on sound planning and appropriate investments in water supply, regional delivery infrastructure and emergency preparedness.

MWDOC serves imported water in Orange County to 28 retail water agencies. These entities, comprised of cities and water districts, are referred to as MWDOC member agencies and provide water to approximately 2.3 million customers, including:

- City of Brea
- City of Buena Park
- City of Fountain Valley
- City of Garden Grove
- City of Huntington Beach
- City of La Habra
- City of La Palma
- City of Newport Beach
- City of Orange
- City of San Clemente
- City of San Juan Capistrano
- City of Seal Beach
- City of Tustin
- City of Westminster
- East Orange County Water District
- El Toro Water District
- Emerald Bay Services District
- Irvine Ranch Water District
- Laguna Beach County Water District
- Mesa Consolidated Water District
- Moulton Niguel Water District
- Orange County Water District
- Santa Margarita Water District
- Serrano Water District
- South Coast Water District
- Golden State Water Company
- Trabuco Canyon Water District
- Yorba Linda Water District

Figure 1-1: Regional Location of Urban Water Supplier

Orange County relies on numerous sources of water and water purveyors to meet the needs of its growing population, including imported water, groundwater, surface water, and recycled water.

Imported water from Northern California and the Colorado River meet approximately half of the County's water needs. The water is provided by Metropolitan, which serves the needs of six counties – Ventura, Los Angeles, San Bernardino, Riverside, Orange, and San Diego.

South Orange County relies on imported water to meet approximately 95 percent of its water demand. The remaining five percent is provided by surface water, limited groundwater, and water recycling. Figure 1-2 illustrates the water service organization in the MWDOC service area.

OCWD manages the Orange County groundwater basin. The groundwater basin, which underlies north and central Orange County, provides approximately 62 percent of the water needed in that area; imported water meets the balance of the water demand. Groundwater is pumped by producers before being delivered to customers.

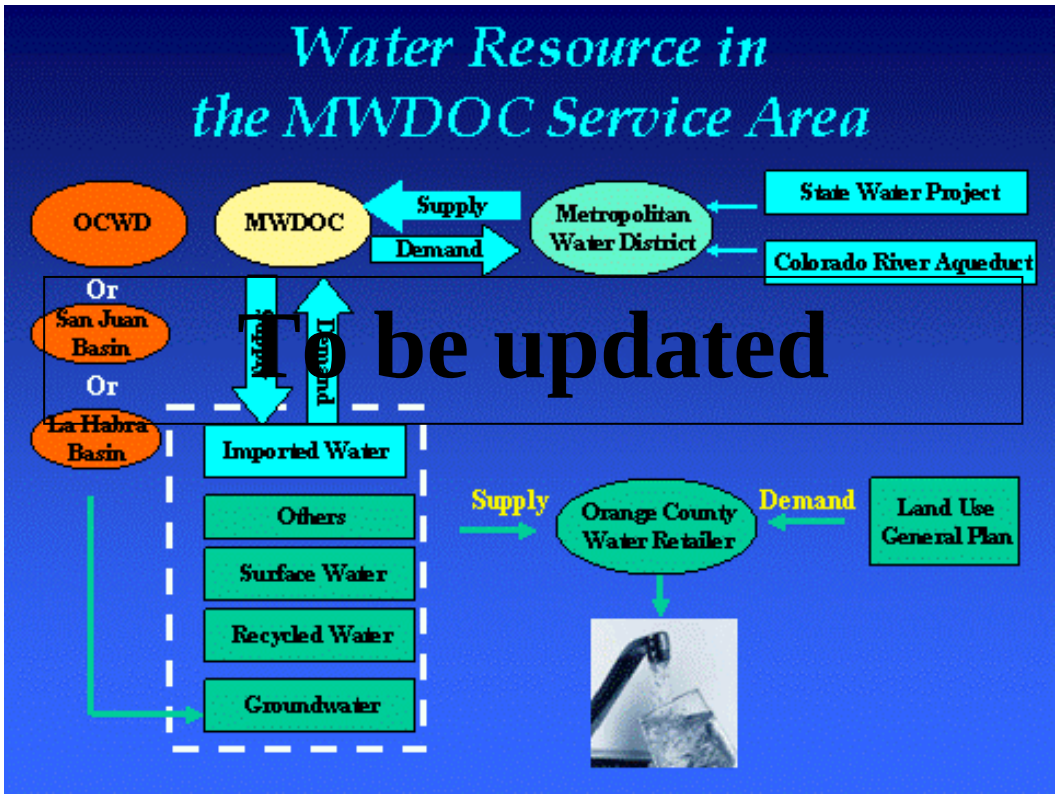

Figure 1-2: Water Service Organization in MWDOC's Service Area

2. **Water Demand**

2.1. Overview

MWDOC is the wholesale provider of imported water to 28 retail water suppliers in Orange County. Water demand in the MWDOC service area has increased approximately 70 percent since 1970. Water demand increased from 285,200 AFY in 1970 to 467,900 AFY in 1990 due to significant population growth within the service area. Demand began to decline in 1990, and by 1992 demand was 406,500 AFY. From that point on, demand began to increase again. By 2000, demand in the MWDOC service area was 524,000 AFY.

In 2010, the total water demand for MWDOC member agencies is approximately 485,311 AFY consisting of 220,132 acre-feet of imported water (treated and untreated), 220,052 acre-feet of local groundwater, 5,485 acre-feet of local surface water, and 39,642 acre-feet of recycled water. Overall, MWDOC's water demands will continue to increase, although not as rapidly as in the past. Future demand growth will average just under 0.5% per year, as compared to historical demand growth of about 1.54% per year. This is due to more limitations on new land development (e.g. cost, available space and environmental restrictions) and the continued commitment to water use efficiency in the region.

Figure 2-1 shows historical demands with service area population to further illustrate the growth in MWDOC's service area.

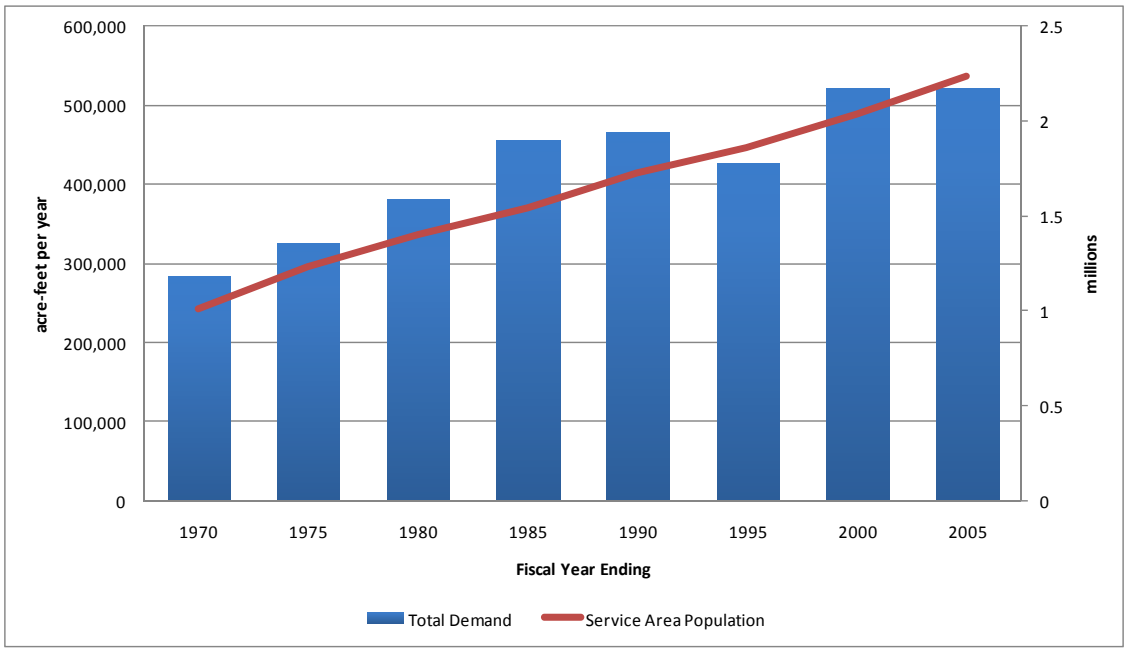

Figure 2-1: Historical Demand and Population in MWDOC's Service Area

Due to MWDOC's active role and leadership in promoting water use efficiency in the region, Orange County is projecting an inconsiderable 17% increase in water demand in the next 25 years accompanying a projected 15% population growth. This projection takes into account economic recovery in the service area that is projected to occur through 2035. This also includes the 20x2020 per capita water use compliance targets for the region. However, it is important to note that the region wide demand projection differs from the 20x2020 compliance target due to how some recycled water supplies are handled in the 20x2020 target calculations, consistent with allowable methodologies. These differences are further discussed in Section 2.5.

The passage of SBx7-7 – the Water Conservation Bill of 2009 - will increase efforts in Orange County to reduce the use of potable supplies in the future. This 2009 law requires all of California's *retail* urban water suppliers serving more than 3,000 AFY or 3,000 service connections to achieve a 20% reduction in per capita consumption (from a historical baseline) by 2020. While MWDOC, as a wholesaler, is not directly required to comply with the SBx7-7 water use targets, MWDOC is required to provide an assessment of its present and proposed future measures, programs, and policies to help its retail water users achieve the water use reductions. Due to the region's past and ongoing water use efficiency and recycled water efforts in the past decade, MWDOC member agencies are already on their way to meeting the required 20x2020 reduction.

Moreover, MWDOC, together with its member agencies and the cities of Anaheim, Fullerton, and Santa Ana, has established an Orange County 20x2020 Regional Alliance to assist in reducing the region's water demand and meet the 20% reduction by 2020. Additionally, Metropolitan has established a goal within its 2010 IRP Update of a 20% reduction in demands in its service area by 2020.

This section will identify the key factors affecting water demand, the types of water use within Orange County, and the perspective of expected future water demand for the next 25 years. In addition, this section will describe in detail the formation of the Orange County 20x2020 Regional Alliance, the steps upon how the regional targets for 2015 and 2020 were calculated, and the deduction of recycled water for indirect potable reuse was applied.

2.2. Factors Affecting Demand

Water consumption is influenced by many factors, from climate characteristics of a hydrologic region, to demographics, land use characteristics, and economics. The key factors affecting water demand in MWDOC's service area are discussed below.

2.2.1. Climate Characteristics

Orange County has a Mediterranean climate: a semi-arid environment with mild winters, warm summers, and moderate rainfall. The climate is consistent with coastal Southern California. The general region lies in the semi-permanent high-pressure zone of the eastern Pacific. As a result, the climate is mild, tempered by cool sea breezes. The usually mild climatological pattern is interrupted infrequently by periods of extremely hot weather, winter storms, or Santa Ana winds.

Orange County's average daily temperatures range from 58 ˚F in December and January to 74 ˚F in August in a typical year. The average annual precipitation is 14 inches, although the region is subject to significant variations in annual precipitation (Table 2-1). The average evapotranspiration (ET) is almost 50 inches per year which is four times the annual average rainfall. This translates to a high demand for landscape irrigation for homes, commercial properties, parks, and golf courses. A region with low rainfall like Southern California is also more prone to droughts.

Table 2-1: Climate Characteristics

	Standard Monthly Average ETo (inches)[1]	Annual Rainfall (inches) [2]	Average Temperature (˚F) [3]
Jan	2.18	3.18	58.0
Feb	2.49	3.05	59.1
Mar	3.67	2.78	60.2
Apr	4.71	0.67	63.0
May	5.18	0.25	65.7
Jun	5.87	0.11	69.3
Jul	6.29	0.02	72.9
Aug	6.17	0.12	74.3
Sep	4.57	0.34	73.2
Oct	3.66	0.36	68.9
Nov	2.59	1.17	62.4
Dec	2.25	1.79	57.9
Annual	**49.63**	**13.84**	**65.4**

[1] CIMIS Station #75, Irvine, California from October 1987 to Present
[2] NOAA, Santa Ana Fire Station, California 1971 to 2000, Mean Precipitation Total
[3] NOAA, Santa Ana Fire Station, California 1971 to 2000, Mean Temperature

The sources of MWDOC's imported water supplies, the State Water Project and Colorado River, are influenced by weather conditions in Northern California and throughout the Colorado River basin. Both regions have recently been suffering from multi-year drought conditions and record low rainfalls which directly impact demands and supplies to Southern California.

2.2.2. Demographics

Orange County has a population of more than 3 million people living in a 798-square-mile area. Comprised of 34 cities, from Brea in the north to San Clemente in the south, Orange County is recognized worldwide for its beaches, recreational facilities, and enviable quality of life. According to the Southern California Association of Governments (SCAG) Growth Forecast Report, Orange County is projected to grow by more than 500,000 people by 2030, bringing the total population in Orange County to 3.5 million.

Population is a key indicator of regional growth. The population of the MWDOC service area has been calculated by the California State University Fullerton (CSUF) Center for Demographic Research (CDR) using the California State Department of Finance population data. Based on this information, the MWDOC service area had a population of 1.01 million in 1970, 2.24 million by 2005, and 2.3 million in 2010. This represents an

average growth of approximately 2.3% per year. During the 1970s, the population growth averaged 3.3% per year; while during the 1990s growth averaged 1.7% per year. Many older cities, especially those in north and central Orange County, anticipate reaching build-out in the near-term and, therefore, their population growth will remain relatively flat over the next 25 years. This, when combined with a relatively young and growing south Orange County population, will result in nearly 2.65 million living in the MWDOC service area by 2035, representing an average growth of 0.66% annually. This slower rate of growth is attributed to the build-out of the MWDOC service area. Table 2-2 shows the current and projected population for the MWDOC service area.

Table 2-2: Current and Projected MWDOC Service Area Population

	2010	2015	2020	2025	2030	2035
Service Area Population [1]	2,300,021	2,370,931	2,441,838	2,512,752	2,583,659	2,654,569

[1] Center for Demographic Research, California State University, Fullerton 2010

As shown in Table 2-3, the number of households in the MWDOC service area is expected to increase by 9% in the next 25 years from 804,285 in 2010 to 873,605 in 2035. The number of persons per household is also projected to increase from 2.90 in 2010 to 3.03 in 2035. Urban employment in the MWDOC service is expected to rise by 15% in the next 25 years.

Table 2-3: MWDOC Service Area Demographics

Demographics	2010	2015	2020	2025	2030	2035
Occupied Housing Units	804,285	842,174	854,636	864,725	869,961	873,605
Single Family	536,435	560,356	567,525	573,263	575,950	577,546
Multi-Family	267,850	281,818	287,111	291,462	294,011	296,060
Persons Per Household	2.90	2.99	3.01	3.02	3.04	3.03
Urban Employment	1,289,152	1,358,247	1,409,430	1,438,507	1,462,847	1,482,076

Note: Growth projections are based on Southern California Association of Governments (SCAG) 2008 Regional Transportation Plan and San Diego Association of Governments (SANDAG) Series 12 Forecast.

2.3. Direct and Indirect Water Use

There are two types of water use in Orange County. “Direct use” is the consumption of water directly piped from treatment facilities or wells to homes, commercial, institutional, and industrial buildings, landscape, and agriculture. “Indirect use” is the use of water to replenish groundwater basins and to serve as a barrier against seawater intrusion. Water used to fill the groundwater basins or act as a seawater barrier will eventually become a source of supply for Orange County residents.

Integrating the two usages of water in the planning process can be confusing and misleading and does not truly reflect water demand in the region. In practice, the two types of water usage are often shown separately. The following subsections will discuss these two types of uses separately. However, the DWR Guidebook to Assist Urban Water Suppliers to Prepare a 2010 Urban Water Management Plan specifically instructs suppliers to present total water uses by summing both "direct use" and "indirect use." To comply with the requirement, this Plan also provides a table summing direct use and indirect use of water demand. However, a footnote is provided to caution the reader not to view the sum as the total water demand in the region for any given point of time.

2.3.1. Direct Use – Municipal/Industrial and Agricultural Demands

Direct water use in Orange County includes municipal, industrial, and agricultural use. Municipal and Industrial (M&I) demands represent the full spectrum of water use within a region, including residential and commercial, industrial, institutional (CII), as well as un-metered uses (e.g. hydrant flushing, fire-fighting). Demands for direct use are met through imported water, groundwater, local surface water, and recycled water. Direct use represents about 90% of MWDOC's total demands. M&I demands within MWDOC's service area are anticipated to grow, while agricultural demands are projected to decline through 2035. By 2035, agricultural demands are projected to represent less than 1% of the total direct use demand. Table 2-4 shows the amount of historical water used for direct consumption in MWDOC's service area.

Table 2-4: Historical Water Demands for Direct Consumption in MWDOC's Service Area (AFY)

	Fiscal Year Ending			
	1990	**1995**	**2000**	**2005**
Municipal & Industrial	447,100	417,700	500,800	504,997
Agriculture	20,800	10,700	20,600	16,781
Total Demand	**467,900**	**428,400**	**521,400**	**521,778**

2.3.2. Indirect Use – Replenishment and Barrier Demands

Indirect water use in Orange County includes the use of water to replenish groundwater basins and to serve as a barrier against seawater intrusion. The Orange County Water District (OCWD) is the entity responsible for managing and replenishing the Orange County Groundwater Basin. OCWD is a special district created by the state and governed by a ten-member Board of Directors to protect, manage, and replenish the basin with purchased imported water, storm water, and recycled water. OCWD further protects the groundwater basin from seawater intrusion through the injection of imported and recycled water along the coast, known as the Talbert Injection Barrier.

Since demands for replenishment for groundwater basin storage and seawater barriers are driven by the availability of supply to the groundwater basin in Orange County, the demand forecast for this type of use is based on the projection of the following supplies under normal conditions:

- Santa Ana River Flows;
- Incidental Recharge;
- Replenishment (surplus) supplies from Metropolitan; and
- Recycled Supplies for replenishment use.

Table 2-5 shows the historical amount used for indirect consumption in MWDOC's service area.

Table 2-5: Historical Water Demands for Indirect Water Use in MWDOC's Service Area (AFY)

	Fiscal Year Ending			
	1990	1995	2000	2005
Total Demand	168,000	193,000	228,000	161,000

2.4. SBx7-7 Requirements

2.4.1. Overview

SBx7-7, The Water Conservation Bill of 2009, was signed into law on February 3, 2010, as part of a comprehensive water legislation package. As discussed above, the bill sets a goal of achieving a 20% statewide reduction in urban per capita water use, and directs urban retail water suppliers to develop targets to meet a 20% reduction in per capita water use by 2020, and an interim 10% reduction by 2015. Water suppliers receive partial credit for past efforts in conservation and deductions for recycled water. As a result not all agencies need to reduce demand by 20% in order to comply with the legislation. A retail agency that does not comply with the requirements of SBx7-7 will not be eligible for a water grant or loan from the state on and after July 16, 2016.

As a wholesale water supplier, MWDOC is not required to establish and meet targets on its own. MWDOC's role implementing the legislation is to assist each retail water supplier in Orange County in analyzing the requirements and establishing their baseline and target water use, as guided by DWR under the Methodologies for Calculating Baseline and Compliance Urban Per Capita Water Use (Technical Methodologies), dated February 2011.

This section includes a description of the efforts by MWDOC to assist retail agencies in complying with the requirements of SBx7-7, including the formation of a Regional Alliance to provide additional flexibility to all water suppliers in Orange County in

meeting compliance under the legislation. This section also includes the documentation for calculations that will allow retail water suppliers to use recycled water for groundwater recharge to offset a portion of their potable demand when meeting the regional as well as individual water use targets for compliance purposes.

MWDOC is also required to include in its RUWMP a discussion of programs intended to be implemented to support retail agencies in achieving their per capita water reduction goals. This is covered in Section 4 – Demand Management Measures.

2.4.2. Orange County 20x2020 Regional Alliance

MWDOC in collaboration with all of its retail agencies as well as the cities of Anaheim, Fullerton, and Santa Ana, has created the Orange County 20x2020 Regional Alliance in an effort to create flexibility in meeting the per capita water use reduction targets required under SBx7-7. This Regional Alliance will allow all of Orange County to benefit from regional investments such as the GWRS, recycled water, and water use efficiency. The members of the Orange County 20x2020 Regional Alliance are shown below in Table 2-6.

Table 2-6: Members of Orange County 20x2020 Regional Alliance

Orange County 20x2020 Regional Alliance	
Anaheim	Moulton Niguel Water District
Brea	Newport Beach
Buena Park	Orange
East Orange County Water District	San Clemente
El Toro WD	San Juan Capistrano
Fountain Valley	Santa Ana
Fullerton	Santa Margarita Water District
Garden Grove	Seal Beach
Golden State Water Company	Serrano WD
Huntington Beach	South Coast Water District
Irvine Ranch Water District	Trabuco Canyon Water District
La Habra	Tustin
La Palma	Westminster
Laguna Beach County Water District	Yorba Linda Water District
Mesa Consolidated Water District	

Within a Regional Alliance, each retail water supplier will have an additional opportunity to achieve compliance under both an individual target and a regional water use target.

- If the Regional Alliance meets its water use target on a regional basis, all agencies in the alliance are deemed compliant.

- If the Regional Alliance fails to meet its water use target, each individual supplier will have an opportunity to meet their water use targets individually.

Individual water suppliers in the Orange County 20x2020 Regional Alliance will state their participation in the alliance, and include the regional 2015 and 2020 Urban Water Use Targets in their individual UWMPs.

As the reporting agency for the Orange County 20x2020 Regional Alliance, MWDOC has documented the calculations for the regional urban water use reduction targets. MWDOC will also provide annual monitoring and reporting for the region on progress toward the regional per capita water use reduction targets.

2.4.3. Steps to Calculate Regional Target

Water suppliers in a Regional Alliance are provided three options for calculating their regional targets[2]. To preserve maximum flexibility, the Orange County 20x2020 Regional Alliance has selected the first option. There are two steps under this approach. Under the first step, each water supplier in the Regional Alliance first calculates its individual target in its retail UWMP as if it were complying individually. Under the second step, the individual targets are weighted by each supplier's population and averaged over all members in the alliance to determine the regional water use target.

Step 1 - Retail Agency Compliance Targets

As described above, the first step in calculating a regional water use target is to determine each water supplier's individual target. DWR has established four target options for urban retail water suppliers to choose from in calculating their water use reduction targets under SBx7-7. The four options include:

- *Option 1* requires a simple 20% reduction from the baseline by 2020 and 10 percent by 2015.
- *Option 2* employs a budget-based approach by requiring an agency to achieve a performance standard based on three metrics
    - Residential indoor water use of 55 GPCD
    - Landscape water use commiserate with Model Landscape Ordinance
    - 10 percent reduction in baseline CII water use
- *Option 3* is to achieve 95% of the applicable state hydrologic region target as set forth in the State's 20x2020 Water Conservation Plan.
- *Option 4* uses a target calculator developed by DWR. This option is provisional and will be updated by DWR before 2014.

[2] Steps for calculating a Regional Alliance can be found in Methodology 9 from the Technical Methodologies.

MWDOC has analyzed each of these options, and has worked with all water suppliers in Orange County to assist them in selecting the most suitable option to document in their UWMPs.

Step 2 - Regional Water Use Reduction Targets Calculation

The regional water use targets for the Orange County 20x2020 Regional Alliance are calculated by weighting the individual water use targets by population and averaging them over all members of the alliance. This calculation is provided below in Table 2-6. Column (1) shows the 2010 population for each individual supplier. The individual targets for each supplier is provided in column (2) for the interim 2015 targets, and column (4) for the final 2020 targets.

To calculate the weighted averages for each retail water supplier, the population is multiplied by the individual targets to get a weighted total for each individual supplier. This is found in column (3) for the interim 2015 targets and in column (5) for the final 2020 targets. The regional targets for the Orange County 20x2020 Regional Alliance are then derived as the sum of the individual weighted averages divided by the total population for a regional alliance.

For example, the 2020 water use target for the city of Brea is 219.6 gpcd, and the 2010 population is 40,368. By multiplying this 2020 target by the population, the result is a weighted average of 8,864,740. The sum of the weighted averages for all members of the Orange County 20x2020 Regional Alliance is 491,343,822. By dividing this weighted total by the regional population of 3,139,017, the resulting regional 2020 water use target is 156.5 gpcd.

The source of the information in Table 2-7, including the population figures, is from within the individual UWMPs for each water supplier in the Orange County 20x2020 Regional Alliance.

Table 2-7: Calculation of Regional Urban Water Use Targets for Orange County 20x2020 Regional Alliance

Orange County 20x2020 Regional Alliance	(1) 2010 Population	(2) 2015 Target (GPCD)	(1) x (2) = (3) Weighted Total 2015	(4) 2020 Target (GPCD)	(1)x (4) = (5) Weighted Total 2020
Brea	40,368	247.0	9,972,833	219.6	8,864,740
Buena Park	84,557	177.4	15,000,082	157.7	13,333,406
East Orange CWD RZ	3,656	295.8	1,081,493	262.9	961,327
El Toro WD	52,019	181.0	9,414,193	160.9	8,368,172
Fountain Valley	59,227	155.6	9,216,257	141.6	8,383,582
Garden Grove	177,020	152.0	26,903,684	141.6	25,057,181
Golden State WC	169,944	156.1	26,521,400	141.6	24,055,573
Huntington Beach	204,831	148.4	30,388,941	137.4	28,136,871
Irvine Ranch WD	337,876	190.1	64,426,278	169.5	57,267,803
La Habra	63,118	150.4	9,495,180	141.6	8,934,353
La Palma	15,544	146.3	2,273,660	135.8	2,111,174
Laguna Beach CWD	21,718	180.4	3,917,328	160.3	3,482,069
Mesa Consolidated WD	111,166	161.1	17,905,542	143.2	15,916,038
Moulton Niguel WD	172,068	193.3	33,263,142	171.8	29,567,237
Newport Beach	67,030	228.1	15,292,411	202.8	13,593,254
Orange	141,107	201.3	28,409,066	179.0	25,252,503
San Clemente	55,398	167.0	9,250,401	148.4	8,222,579
San Juan Capistrano	40,262	198.9	8,008,531	176.8	7,118,694
Santa Margarita WD	155,229	189.2	29,371,222	168.2	26,107,753
Seal Beach	25,561	145.6	3,721,700	139.5	3,565,368
Serrano WD	6,651	421.1	2,800,933	374.3	2,489,718
South Coast WD	38,641	167.7	6,481,118	149.1	5,760,994
Trabuco Canyon WD	14,907	220.3	3,284,689	180.9	2,696,823
Tustin	69,010	170.6	11,772,844	151.6	10,464,750
Westminster	95,793	134.0	12,834,750	125.9	12,065,039
Yorba Linda WD	77,320	257.5	19,911,769	228.9	17,699,351
Anaheim	361,043	181.4	65,503,883	161.3	58,225,674
Fullerton	138,600	199.9	27,704,878	177.7	24,626,558
Santa Ana	358,136	118.6	42,457,305	108.9	39,015,239
Regional Alliance Total	3,139,017	**174.1**	546,585,513	**156.5**	491,343,822

Table 2-8 provides the regional urban water use targets for the Orange County 20x2020 Regional Alliance.

Table 2-8: Urban Water Use Targets for Orange County 20x2020 Regional Alliance

	2015 Target	2020 Target
Orange County 20x2020 Regional Alliance	174.1	156.5

These targets are subject to revisions, as retail water suppliers have an option to update their target in their 2015 UWMPs. Additionally, the population weightings used to calculate these targets will be revised in 2015 and 2020 based on the most recent compliance-year population data.

Deducting Recycled Water Used for Indirect Potable Reuse

SBx7-7 allows urban retail water suppliers to calculate a deduction for recycled water entering their distribution system indirectly through a groundwater source. Individual water suppliers within the OCWD Groundwater Basin have the option of choosing this deduction to account for the recharge of recycled water into the basin by OCWD historically through Water Factory 21, and more recently by GWRS. These deductions also benefit all members of the Orange County 20x2020 Regional Alliance.

MWDOC has provided the documentation for the calculations of this deduction to assist retail water suppliers if they choose to include recycled water for indirect potable reuse in their individual targets. This calculation is applied as a deduction from the water supplier's calculation of Gross Water Use[3].

Table 2-9 provides the calculation deducting recycled water for indirect potable reuse for OCWD Basin Agencies. Because year-to-year variations can occur in the amount of recycled water applied in a groundwater recharge operations, a previous five year average of recharge is used, as found in column (1). To account for losses during recharge and recovery, a factor of 96.5% was used in column (2)[4]. After accounting for these losses, the estimated volume of recycled water entering the distribution system is calculated in column (3).

In column (4), the annual deduction for recycled water for indirect potable reuse is expressed as a percentage of the total volume of water extracted from the basin in that year. This is the annual percentage of total OCWD basin production that is eligible for a deduction. For individual water suppliers the OCWD Basin, the annual deduction is calculated as their basin pumping in a given year multiplied by the value in column (5).

For example, if Agency A pumped 10,000 acre-feet of water from the OCWD Basin in Fiscal Year 2004/05, then 1.47% of that total production would be deducted from the agency's calculation of Gross Water Use for that year as found in column (5). This equates to a deduction of 147 acre-feet.

[3] The calculation is described in Step 8 of Methodology 1 from the Technical Methodologies.
[4] Figure based on in-basin losses to other groundwater basins, which averages 10,000 AF per year or 3.5% of average basin yield. The estimated FY 2090/10 basin losses of 9,315 acre-feet can be found in the *Fiscal Year 2009/10 Conjunctive Use Program (CUP) Account Activity and Losses.* Losses associated with treatment and recharge operations are negligible.

Table 2-9: Calculation of Annual Deductable Volume of Indirect Recycled Water Entering Distribution System

Fiscal Year Ending	(1) 5-Year Average Recharge (Acre-Feet)	(2) Loss Factor for Recharge & Recovery	(1) x (2) = (3) Volume Entering Distribution System (Acre-Feet)	(4) Percent of Total Basin Production
1990	6,498	96.7%	6,284	2.75%
1991	6,498	96.5%	6,271	2.65%
1992	6,566	96.5%	6,336	2.59%
1993	6,658	96.5%	6,425	2.62%
1994	7,034	96.5%	6,788	2.84%
1995	6,636	96.5%	6,403	2.32%
1996	5,884	96.5%	5,678	1.88%
1997	5,413	96.5%	5,224	1.68%
1998	4,922	96.5%	4,750	1.60%
1999	3,789	96.5%	3,657	1.13%
2000	3,479	96.5%	3,357	1.05%
2001	4,086	96.5%	3,943	1.22%
2002	3,643	96.5%	3,515	1.09%
2003	3,594	96.5%	3,468	1.26%
2004	3,868	96.5%	3,733	1.40%
2005	3,527	96.5%	3,404	1.47%
2006	3,203	96.5%	3,091	1.44%
2007	3,607	96.5%	3,481	1.23%
2008	2,822	96.5%	2,723	0.78%
2009	5,607	96.5%	5,411	1.73%
2010	16,103	96.5%	15,539	5.66%

The deductable amount of indirect recycled water is anticipated to increase to approximately 69,000 AF in 2015, after five years of full production from GWRS, which came online in 2008. OCWD has also designed the Phase 2 expansion for GWRS, which will further increase the deductable amount of indirect recycled water to approximately 98,000 AF within the timeframe of the 2020 UWMPs.

2.5. Demand Projections

2.5.1. 25 Year Projections

One of the main objectives of this RUWMP is to provide an insight into the MWDOC service area future water demand outlook. MWDOC's service area total retail water demand in 2010 was 485,311 acre-feet which is met through a combination of 45% groundwater, 45% imported water, 1% surface water and 8% recycled water. The current

water demands represent the sum of demands of MWDOC's 28 member agencies in FY 2009-10 as provided to MWDOC by the member agencies.

The most recent survey requested that member agencies provide demand projections for the period 2015- 2035 in five-year increments. Methodologies and assumptions underlying these projections vary from agency to agency, but all projections reflect an in-depth knowledge of the agencies' service areas. In most cases, the projections are closely correlated to the general plans prepared by the County of Orange or cities within MWDOC's service area. Additionally, MWDOC worked with OCWD to determine seawater barrier demands. MWDOC also worked with Metropolitan to obtain projections on employment and economic growth in the MWDOC service area, and this information was taken into account when developing the demand projections.

Table 2-10 below depicts the current and projected water demands within the MWDOC service area for a 25-year planning period.

Table 2-10: Current and Projected Water Demands in MWDOC Service Area (AFY)

Water Supply Sources	Fiscal Year Ending					
	2010	2015	2020	2025	2030	2035
Imported Water	220,132	225,697	234,454	243,853	247,545	250,519
Groundwater	220,052	243,032	246,514	248,933	250,553	251,754
Surface Water	5,485	6,100	6,100	6,100	6,100	6,100
Recycled Water	39,642	51,658	55,699	59,324	59,492	59,597
Total	**485,311**	**526,487**	**542,767**	**558,210**	**563,690**	**567,970**

Table 2-11 shows the projected demands for imported water MWDOC has provided to its member agencies.

Table 2-11: MWDOC's Demand Projections Provided to its Member Agencies (AFY)

	Fiscal Year Ending				
	2015	2020	2025	2030	2035
Member Agencies	225,697	234,454	243,853	247,545	250,519

2.5.2. Low Income Household Projections

The UWMP Act requires for retail water suppliers to include water use projections for single-family and multifamily residential housing needed for lower income and affordable households. This requirement is to assist the retail suppliers in complying with the requirement under Section 65589.7 of the Government Code that suppliers grant a

priority for the provision of service to housing units affordable to lower income households. Because MWDOC is a wholesale agency, the information on low income household projections can be found in each of the retail water supplier individual UWMPs.

3. **Water Sources and Supply Reliability**

3.1. Overview

Water supplies in MWDOC's service area come from both local and imported sources. As a member agency of Metropolitan, MWDOC purchases water from Metropolitan to deliver to its member agencies to supplement local supplies. In 2010, MWDOC supplied 220,132 AFY of imported water to its member agencies. Imported water represents approximately 45 percent of the total water supply in the MWDOC service area. Sources of Metropolitan's imported water include the Colorado River Aqueduct (CRA) and the State Water Project (SWP).

Local supplies developed by individual member agencies, primarily groundwater, presently account for about 55 percent of the service area's water supplies. Local supplies include groundwater, recycled wastewater, and surface water. The primary groundwater basin is located in the northern half of MWDOC's service area.

Figure 3-1 depicts Orange County's current water supply sources.

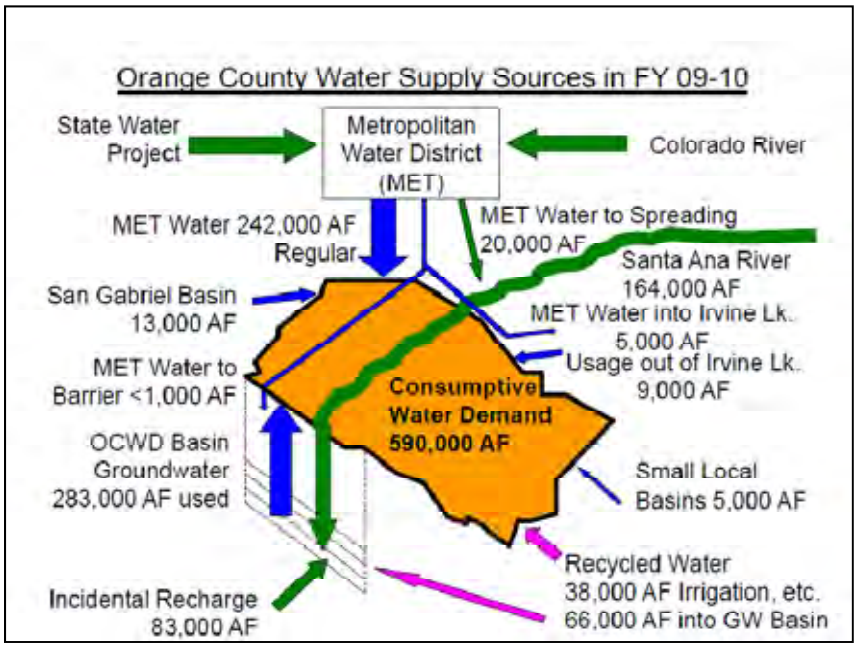

Figure 3-1: Schematic of Water Supply Sources in Orange County[5]

[5] This includes water supply sources for the entire County including the three cities of Anaheim, Fullerton, and Santa Ana

MWDOC and its member agencies are collectively working to improve the water reliability within the service area by continuously developing local supplies. MWDOC works together with two primary agencies – Metropolitan and OCWD to insure a safe and high quality water supply. Metropolitan's 2010 Integrated Water Resources Plan (IRP) update describes the core water resource strategy that will be used to meet full-service demands (non-interruptible agricultural and replenishment supplies) at the retail level under all foreseeable hydrologic conditions from 2015 through 2035. The water supply mix projected to meet MWDOC's service area demands through 2035 is depicted in Figure 3-2 below. The imported water supply numbers shown here represent only the amount of supplies projected to meet demands and not the full supply capacity, as only the amount of imported water needed to meet demands will be purchased from Metropolitan.

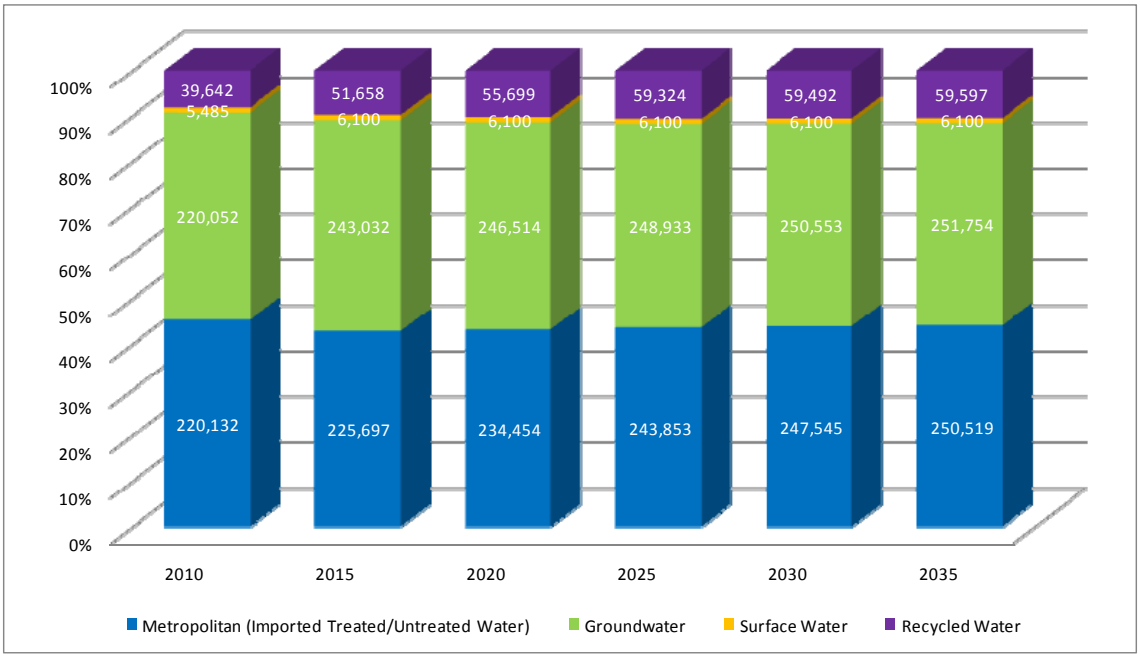

Figure 3-2: Current and Projected Water Supplies for MWDOC Service Area (AFY)

The following section provides a detailed discussion of the main sources of water within MWDOC's service area as well as projections of the region's future water supply portfolio for the next 25 years. This section also compares projected supply and demand under various hydrological conditions to determine MWDOC's supply reliability for the 25 year planning horizon. This section satisfies the requirements of § 10631 (b) and (c), and 10635 of the Water Code.

3.2. Metropolitan Water District of Southern California

Metropolitan is the largest water wholesaler for domestic and municipal uses in California. Approximately 19.1 million Southern Californians rely on Metropolitan for imported water. Metropolitan wholesales imported water supplies to 26 member cities and water districts in six Southern California counties. Since 1983, the total regional retail water demands within Metropolitan's service area have increased from about 2.9 million acre-feet to nearly 4.2 million acre-feet in 2007. Metropolitan has provided between 45 and 60 percent of the municipal, industrial, and agricultural water used in its nearly 5,200-squre-mile service area. The remaining supply comes from local wells, local surface water, recycled water supplies, and from the City of Los Angeles's aqueduct in the eastern Sierra Nevada.

Metropolitan is governed by a Board of Directors comprised of 37 appointed individuals with a minimum of one representative from each of Metropolitan's 26 member agencies. The allocation of directors and voting rights are determined by each agency's assessed valuation. Each member of the Board shall be entitled to cast one vote for each ten million dollars ($10,000,000) of assessed valuation of property taxable for district purposes, in accordance with Section 55 of the Metropolitan Water District Act. As of August 10, 2010, MWDOC has four directors on Metropolitan's Board, which represents 16.94% percent of the vote entitlement.

Metropolitan is responsible for importing water into the region through its operation of the CRA and its contract with the State of California for SWP supplies. Major imported water aqueducts bringing water to Southern California are shown in Figure 3-3. Over the past decade, supplies from the Colorado River have averaged 0.92 million acre-feet. Supplies from the State Water Project over the same period have averaged 1.40 million acre-feet of water. The future reliability of these supplies is increasingly uncertain; however, Metropolitan has increased its ability to supply water, particularly in dry years, through the implementation of storage and transfer programs.

Figure 3-3: Major Aqueducts Bringing Water to Southern California

In Orange County, MWDOC and the cities of Anaheim, Fullerton, and Santa Ana purchase imported water from Metropolitan. MWDOC purchases both treated potable and untreated water from Metropolitan. Figure 3-4 illustrates the Metropolitan feeders and major transmission pipelines that deliver water within the County.

Figure 3-4: Metropolitan Feeders and Transmission Mains Serving Orange County

3.2.1. Metropolitan's 2010 Regional Urban Water Management Plan

Metropolitan's 2010 Regional Urban Water Management Plan (Metropolitan RUWMP) reports on its water reliability and identifies projected supplies to meet the long-term demand within its service area. The Metropolitan RUWMP discusses the current water supply conditions and long-term plans for supply implementation and continued development of a diversified resource mix. It describes the programs being implemented such as: the CRA, SWP, and Central Valley storage/transfer programs, water use efficiency programs, local resource projects, and in-region storage that will enable the region to meet its water supply needs. The Metropolitan RUWMP also presents

Metropolitan's supply capacities from 2015 through 2035 under the three hydrologic conditions specified in the Act: single dry-year, multiple dry-years, and average year.

Information from Metropolitan's RUWMP, including the background, associated challenges, and long-term development programs for each of Metropolitan's supply sources and Metropolitan's supply capacities under various hydrologic conditions have been summarized and included herein. Additional information on Metropolitan can be found in the Metropolitan 2010 RUWMP.

3.2.2. Colorado River Aqueduct

The Colorado River was Metropolitan's original source of water after Metropolitan's establishment in 1928. The CRA, which is owned and operated by Metropolitan, transports water from the Colorado River approximately 242 miles to its terminus at Lake Mathews in Riverside County. After deducting for conveyance losses and considering maintenance requirements, up to 1.25 million acre-feet (MAF) of water per year may be conveyed through the CRA to Metropolitan's member agencies, subject to the availability of Colorado River water for delivery to Metropolitan as described below.

Water from the Colorado River or its tributaries is available to users in California, Arizona, Colorado, Nevada, New Mexico, Utah, and Wyoming, as well as to Mexico. California is apportioned the use of 4.4 MAF of water from the Colorado River each year plus one-half of any surplus that may be available for use collectively in Arizona, California, and Nevada. In addition, California has historically been allowed to use Colorado River water apportioned to but not used by Arizona or Nevada. Under the 1931 Seven Party Agreement that has formed the basis for the distribution of Colorado River water made available to California, Metropolitan holds the fourth priority right[6] to 550 thousand acre-feet (TAF) per year. Metropolitan also holds a fifth priority for an additional 662 TAF per year that exceeds California's 4.4 MAF per year basic apportionment, and another 180 TAF per year when surplus flows are available. Metropolitan can obtain water under the fifth priority from:

- Water unused by the California holders of priorities 1 through 3
- Water saved by the Palo Verde land management, crop rotation, and water supply program, or
- When the U.S. Secretary of the Interior makes available either or both:
    - Surplus water, and
    - Water apportioned to, but unused by, Arizona and/or Nevada

[6] The 1931 Seven Party Agreement provides the basis for the priorities among California's contractors to use of Colorado River water made available to California. The first four priorities total the 4.4 MAF per year available to California.

Background

Historically, Metropolitan's fifth priority rights under the Seven Party Agreement were satisfied with water allocated to Arizona and Nevada that these states did not use. Beginning in 1985, with the commencement of Colorado River water deliveries to the Central Arizona Project, year-to-year availability of Colorado River water to Metropolitan became uncertain. The Secretary of the Interior asserted that California's users of Colorado River water had to limit their use to a total of 4.4 MAF per year, plus any available surplus water. Under the auspices of the State's Colorado River Board, these users developed a draft plan to resolve the problems, which was known as "California's Colorado River Water Use Plan" (California Plan).

The California Plan characterized how California would develop a combination of programs to allow the state to limit its annual use of Colorado River water to 4.4 MAF per year plus any available surplus water. The 2003 Quantification Settlement Agreement (QSA) among Imperial Irrigation District (IID), Coachella Valley Water District (CVWD), and Metropolitan is a critical component of this plan. It established a baseline water use for each of these agencies and facilitates the transfer of water from agricultural agencies to urban uses, and specifies that IID, CVWD, and Metropolitan would forbear use of water to permit the Secretary of the Interior to satisfy the uses of the non-encompassed present perfected rights (PPRs). The PPR holders include certain Indian reservation, federal wildlife refuges, and other users, some but not all of which are encompassed by the Seven Party Agreement.

Current Conditions

On November 5, 2003, IID filed a validation action in Imperial County Superior Court, seeking a judicial determination that thirteen agreements associated with the IID/San Diego County Water Authority (SDCWA) water transfer and the QSA are valid, legal and binding. Other lawsuits also were filed challenging the execution, approval and subsequent implementation of the QSA on various grounds. One of the key issues was the constitutionality of the QSA Joint Powers Authority Agreement, pursuant to which IID, CVWD, and SDCWA agreed to commit $133 million toward certain mitigation costs associated with implementation of the transfer of 300 TAF of water conserved by IID pursuant to the QSA, and the State agreed to be responsible for any mitigation costs exceeding this amount. A final judgment was issued on February 11, 2010, holding that the State's commitment was unconditional in nature and, as such, violated the State's debt limitation under the California Constitution, and that eleven other agreements, including the QSA, also are invalid because they are inextricably interrelated with the QSA Joint Powers Authority Agreement and the funding mechanism it established to cover such mitigation costs.

Metropolitan, CVWD and SDCWA have filed appeals of the court's decision, which will stay the ruling pending outcome of the appeal. If the ruling stands, it could delay the implementation of programs authorized under the QSA or result in increased costs or other adverse impacts. The impact, if any, that the ruling might have on Metropolitan's water supplies cannot be adequately determined at this time.

Runoff in the Colorado River Basin above Lake Powell from 2000 through 2007 was the lowest eight-year runoff on record bringing Colorado River system storage down to 50 percent of capacity. Runoff returned to near normal during 2008 through 2010 but the system storage remained just slightly above 50 percent of capacity.

Colorado River Programs and Long-Term Planning

Metropolitan has identified a number of programs that could be used to achieve the regional long-term development targets for the CRA and has entered into or is exploring agreements with a number of agencies as discussed below. These programs are described in greater detail in Metropolitan's 2010 RUWMP.

Existing and proposed Colorado River Water Management Programs include:

- IID / Metropolitan Conservation Program- Under this program, Metropolitan has funded water efficiency improvements within IID's service area in return for the right to divert the water conserved by those investments.
- Palo Verde Land Management, Crop Rotation, and Water Supply Program- Under this program, participating farmers in Palo Verde Irrigation District (PVID) are paid to reduce their water use by not irrigating a portion of their land.
- Southern Nevada Water Authority (SNWA) and Metropolitan Storage and Interstate Release Agreement- Under this agreement, additional Colorado River supplies are made available to Metropolitan when there is space available in the CRA to receive the water. SNWA may call on Metropolitan to reduce is Colorado River water order to return this water no earlier than 2019, unless Metropolitan agrees otherwise.
- Lower Colorado Water Supply Project- Under this contract, Metropolitan receives, on an annual basis, Lower Colorado Water Supply Project water unused by the City of Needles and other entities with no rights or insufficient rights to use of Colorado River water in California.

- Lake Mead Storage Program- This program allows Metropolitan to storage "Intentionally Created Surplus"[7] conserved through extraordinary conservation in Lake Mead.
- Hayfield Groundwater Storage Program- This program will allow CRA water to be stored in the Hayfield Groundwater Basin in east Riverside County for future withdrawal and delivery to the CRA.

Available Supplies

Metropolitan's current CRA program capabilities under average year, single dry year, and multiple dry year hydrologies are shown below in Table 3-1.

[7] Lake Mead storage program included a provision that water left in Lake Mead must be conserved through extraordinary conservation measures ("Intentionally Created Surplus") and not simply not needed in the year stored.

Table 3-1: Metropolitan Colorado River Aqueduct Program Capabilities

Colorado River Aqueduct
Program Capabilities
Year 2030
(acre-feet per year)

Hydrology	Multiple Dry Years (1990-92)	Single Dry Year (1977)	Average Year (1922-2004)
Current Programs			
Basic Apportionment – Priority[4]	550,000	550,000	550,000
IID/MWD Conservation Program	85,000	85,000	85,000
Priority 5 Apportionment (Surplus)	0	0	13,000
PVID Land Management, Crop Rotation, and Water Supply Program	133,000	133,000	133,000
Lower Colorado Water Supply Project	5,000	5,000	5,000
Lake Mead Storage Program	400,000	400,000	400,000
Quechan Settlement Agreement Supply	7,000	7,000	7,000
Forbearance for Present Perfected Rights	(47,000)	(47,000)	(47,000)
CVWD SWP/QSA Transfer Obligation	(35,000)	(35,000)	(35,000)
DWCV SWP Table A Obligation	(77,000)	(60,000)	(155,000)
DWCV SWP Table A Transfer Callback	41,000	32,000	82,000
DWCV Advance Delivery Account	36,000	28,000	73,000
Drop 2 Reservoir Funding	22,000	25,000	25,000
SNWA Agreement	0	0	0
Expand SNWA Agreement	0	0	0
Subtotal of Current Programs	***1,120,000***	***1,123,000***	***1,136,000***
Programs Under Development			
Additional PVID Transfers (Crop Stressing/Fallowing)	62,000	62,000	62,000
Arizona Programs - CAP	50,000	50,000	50,000
California Indians / Other Ag	10,000	10,000	10,000
ICS Exchange	25,000	25,000	25,000
Agreements with CVWD	35,000	35,000	35,000
Hayfield Groundwater Extraction Project	0	0	0
Subtotal of Proposed Programs	***182,000***	***182,000***	***182,000***
Additional Non-Metropolitan CRA Supplies			
SDCWA/IID Transfer	200,000	200,000	200,000
Coachella & All-American Canal Lining			
To SDCWA	80,000	80,000	80,000
To San Luis Rey Settlement Parties1	16,000	16,000	16,000
Subtotal of Non-Metropolitan Supplies	***296,000***	***296,000***	***296,000***
Maximum CRA Supply Capability[2]	**1,598,000**	**1,601,000**	**1,614,000**
Less CRA Capacity Constraint (amount above 1.25 MAF)	*(348,000)*	*(351,000)*	*(364,000)*
Maximum Expected CRA Deliveries[3]	**1,250,000**	**1,250,000**	**1,250,000**
Less Non-Metropolitan Supplies[4]	*(296,000)*	*(296,000)*	*(296,000)*
Maximum Metropolitan Supply Capability[5]	**954,000**	**954,000**	**954,000**

[1] Subject to satisfaction of conditions specified in agreement among Metropolitan, the United States, and the San Luis Rey Settlement Parties
[2] Total amount of supplies available without taking into consideration CRA capacity constraint.
[3] The Colorado River Aqueduct delivery capacity is 1.250 MAF annually.
[4] Exchange obligation for the SDCWA-IID transfer and the Coachella and All American Canal Lining projects.
[5] The amount of CRA water available to Metropolitan after meeting its exchange obligations.

Source: Metropolitan 2010 RUWMP, Table 3-1

3.2.3. State Water Project

The SWP consists of a series of pump stations, reservoirs, aqueducts, tunnels, and power plants operated by DWR. This statewide water supply infrastructure provides water to 29 urban and agricultural agencies throughout California. The original State Water Contract

called for an ultimate delivery capacity of 4.2 MAF, with Metropolitan holding a contract for 1.911 MAF.

Much of the SWP water supply passes through the San Francisco-San Joaquin Bay-Delta (Bay-Delta). More than two-thirds of California's residents obtain some of their drinking water from the Bay-Delta system. For decades, the Bay-Delta has experienced water quality and supply reliability challenges and conflicts due to variable hydrology and environmental standards that limit pumping operations.

Background

The listing of several fish species as threatened or endangered under the federal or California Endangered Species Acts (respectively, the "Federal ESA" and the "California ESA" and, collectively, the "ESAs") have adversely impacted operations and limited the flexibility of the SWP. An annual environmental water account established under the Bay-Delta Program as a means of meeting environmental flow requirements and export limitations has helped to mitigate these impacts. In 2004 and 2005, the U.S. Fish and Wildlife Service (USFWS) and National Marine Fisheries Service (NMFS) issued biological opinions and incidental take statements that govern operations of the SWP and the Central Valley Project (CVP) with respect to the Delta smelt, the winter-run and spring-run Chinook salmon, and the Central Valley steelhead.

Litigation filed by several environmental interest groups alleged that the 2004 and 2005 biological opinions and incidental take statements inadequately analyzed impacts on listed species under the Federal ESA. On May 25, 2007, Federal District Judge Wanger issued a decision on summary judgment in NRDC v. Kempthorne, finding the USFWS biological opinion for Delta smelt to be invalid. On December 14, 2007, Judge Wanger issued his Interim Remedial Order requiring that the SWP and CVP operate according to certain specified criteria until a new biological opinion for the Delta smelt is issued. Under the Interim Remedial Order, SWP operations were constrained in the winter and spring of 2007-08 by prevailing conditions and the status of the Delta smelt, reducing SWP deliveries to Metropolitan by approximately 250 TAF, as water that otherwise could have been diverted for delivery through the California Aqueduct, which is owned by DWR and delivers water from the SWP to Metropolitan, bypassed the SWP pumps.

The USFWS released a new biological opinion on the impacts of the SWP and CVP on Delta smelt on December 15, 2008. Metropolitan and others filed lawsuits challenging the biological opinion. On April 16, 2008, the court invalidated the 2004 NMFS's biological opinion for the salmon and other fish species that spawn in rivers flowing into the Bay-Delta. The NFWS released its new biological opinion for salmonoid species on June 4, 2009. DWR estimated an average 10 percent water loss from the Bay-Delta, expected to begin in 2010, under this biological opinion. The impact on SWP deliveries attributable to the Delta smelt and salmonoid species biological opinions combined is

estimated to be 1.0 MAF in an average year, reducing SWP deliveries from approximately 2.3 MAF for the year under average hydrology.

DWR has altered the SWP operations to accommodate species of fish listed under the ESAs, and these changes have adversely impacted SWP deliveries. DWR's Water Allocation Analysis indicated that export restrictions could reduce deliveries to Metropolitan by 150 TAF to 200 TAF for 2010 under median hydrologic conditions.

Operational constraints likely will continue until a long-term solution to the problems in the Bay-Delta is identified and implemented. New biological opinions for listed species under the Federal ESA or by the California Department of Fish and Game's issuance of incidental take authorizations under the Federal ESA and California ESA might further adversely affect SWP and CVP operations. Additionally, new litigation, listings of additional species or new regulatory requirements could further adversely affect SWP operations in the future by requiring additional export reductions, releases of additional water from storage or other operational changes impacting water supply operations.

Current Conditions

The December 2009 draft of DWR's SWP Delivery Reliability Report shows that future SWP deliveries will be impacted by two significant factors: restrictions on SWP and CVP Delta pumping and climate change. The 2009 draft Reliability Report shows greater reductions in water deliveries on average when compared to the 2007 report. Over multiple-year dry periods, average annual "Table A" [8] deliveries vary from 32% to 34% of the maximum "Table A" amount, while average annual deliveries over multiple-year wet periods range from 72 to 94 percent of the maximum Table A amount. Under future conditions, annual SWP Article 21 deliveries average 62 TAF, ranging from 1 TAF to 550 TAF over the 82-year simulation period. The current "Table A" allocation as of April 25, 2011 is 80 percent of the maximum "Table A" allotment.

State Water Project Programs and Long-Term Planning

Metropolitan's implementation approach for the SWP depends on full use of the current State Water Contract provisions and successful implementation of a number of agreements, including the Sacramento Valley Water Management (Phase 8 Settlement Agreement and the Bay-Delta Conservation Plan (BDCP). The BDCP is being prepared

[8] [8] The term "Table A" refers to Table A in the contract between each of the 29 State Water Contractors and the California Department of Water Resources. Each Contractor's "Table A" amount represents a share of the project (the total amount of Table A for all contractors equals approximately 4.2M acre-feet) which entitles each contractor to a portion of the available water supply for a given year and also obligates each contractor to a share of the operations and debt financial obligations for the State Water Project.

through a collaboration of state, federal, and local water agencies, state and federal fish agencies, environmental organizations, and other interested parties with the ultimate goal of developing a set of actions that will provide for both species/habitat protection and improved reliability of water supplies. The Phase 8 Settlement Agreement was developed among Bay-Delta watershed users to determine how all Bay-Delta water users would bear some of the responsibility of meeting flow requirements.

Other programs and agreements that Metropolitan has implemented to improve management of SWP supplies include:

- Monterey Amendment – This settlement between SWP contractors and DWR altered the water allocation procedures such that both shortages and surpluses would be shared in the same manner for all contractors, eliminating the prior "agriculture first" shortage provision.
- SWP Terminal Storage – Metropolitan has contractual rights to 65 TAF of flexible storage at Lake Perris and Castaic Lake, which provides Metropolitan with additional options for maximizing yield from the SWP.
- Yuba Dry Year Water Purchase Program – Metropolitan entered into this agreement with DWR in 2007 to provide for Metropolitan's participation in the Yuba Dry Year Water Purchase Program, which provides transfers of water from the Yuba County Water Agency during dry years through 2025.
- Desert Water Agency/CVWD SWP Table A Transfer – Under this agreement, Metropolitan transferred 100 TAF of its SWP Table A contractual amount to Desert Water Agency/CVWD. Metropolitan is able to recall the SWP transfer water in years in which Metropolitan determines it needs the water to meet its water management goals. The main benefit of the agreement is to reduce Metropolitan's SWP fixed costs in wetter years when there are more than sufficient supplies to meet Metropolitan's water management goals, while at the same time preserving its dry-year SWP supply.
- Desert Water Agency/CVWD Advance Delivery Program – Under this program, Metropolitan delivers Colorado River water to the Desert Water Agency and CVWD in advance of the exchange for their SWP Contract Table A allocations. By delivering enough water in advance to cover Metropolitan's exchange obligations, Metropolitan is able to receive Desert Water Agency and CVWD's available SWP supplies in years in which Metropolitan's supplies are insufficient without having to deliver an equivalent amount of Colorado River water.
- Desert Water Agency/CVWD Other SWP Deliveries – Since 2008, Metropolitan has provided Desert Water Agency and CVWD written consent to take delivery from the SWP facilities non-SWP supplies separately acquired by each agency.
- Diamond Valley Lake – The completion and filling of Diamond Valley Lake between 1999 and 2003 marked the most important achievement with respect to protecting Southern California against a SWP system outage. The lake can hold

up to 810 TAF that provides Southern California with a six-month emergency water supply as well as carryover and regulatory storage.

- Inland Feeder Project – The Inland Feeder project is a high-capacity water delivery system designed to increase Southern California's water supply reliability. The project will take advantage of large volumes of water when available from northern California, depositing it in surface storage reservoirs, such as Diamond Valley Lake, and local groundwater basins for use during dry periods and emergencies.

In addition to those actions discussed above, Metropolitan adopted a Delta Action Plan in June 2007 which includes a long-term Delta plan. The Delta Action Plan provides a framework for staff to pursue actions with other agencies and stakeholders to build a sustainable Delta and reduce conflicts between water supply conveyance and the environment. The plan aims to prioritize immediate short-term actions to stabilize the Delta while an ultimate solution is selected, and mid-term steps to maintain the Bay-Delta while the long-term solution is implemented. Metropolitan also provided input to the Delta Vision Blue-Ribbon Task Force developed as part of the Governor's Delta Vision process. After delivery of the Delta Vision recommendations, a package of bills was signed by the legislature in 2009, including SB 1 x7, which reformed Delta policy and governance.

In evaluating the supply capabilities for the 2010 RUWMP, Metropolitan assumed a new Delta conveyance is expected to be operational by 2022 that would return supply reliability similar to 2005 condition, prior to supply restrictions imposed due to the Biological Opinions.

Available Supplies

Metropolitan's current State Water Project (also known as California Aqueduct) program capabilities under average year, single dry year, and multiple dry year hydrologies are shown below in Table 3-2.

Table 3-2: Metropolitan California Aqueduct Program Capabilities

California Aqueduct Program Capabilities
Year 2030
(acre-feet per year)

Hydrology	Multiple Dry Years (1990-92)	Single Dry Year (1977)	Average Year (1922-2004)
Current Programs			
MWD Table A	469,000	107,000	1,026,000
DWCV Table A	77,000	60,000	155,000
San Luis Carryover [1]	69,000	208,000	208,000
Article 21 Supplies	0	0	52,000
Yuba River Accord Purchase	0	0	0
Subtotal of Current Programs	*615,000*	*375,000*	*1,441,000*
Programs Under Development			
Delta Improvements	341,000	628,000	605,000
IRP SWP Target [2]	0	0	0
Subtotal of Proposed Programs	*341,000*	*628,000*	*605,000*
Maximum Supply Capability	**956,000**	**1,003,000**	**2,046,000**

[1] Includes DWCV carryover.
[2] Remaining supply needed to meet IRP target.

Source: Metropolitan 2010 RUWMP, Table 3-2

3.2.4. Central Valley/SWP Storage and Transfer Programs

Storage is a major component of Metropolitan's dry year resource management strategy. Metropolitan's likelihood of having adequate supply capability to meet projected demands, without implementing its Water Supply Allocation Plan (WSAP), is dependent on its storage resources. Metropolitan endeavors to increase the reliability of supplies received from the California Aqueduct by developing flexible Central Valley storage and transfer programs. Over the years, Metropolitan has developed numerous voluntary Central Valley storage and transfer programs, aiming to develop additional dry-year water supplies.

Background

Metropolitan's storage and transfer programs were established to augment SWP reliability in dry years. Metropolitan's Board determined that the criteria for operating the SWP did not provide sufficient reliability to meet Metropolitan's overall supply reliability objectives. Most recently, DWR's estimates of SWP reliability capability show that SWP reliability under conditions similar to 1977, the driest year on record, could be significantly worse than earlier modeling indicated. Metropolitan estimates that currently in a single dry year similar to 1977, SWP deliveries in its service area would be about 134 TAF rather than the 418 TAF of "Table A" water previously estimated. Metropolitan estimates that another 280 TAF of carryover storage could be delivered, for a total delivery of 414 TAF.

Metropolitan believes that it now has in place Central Valley/SWP storage and transfer programs capable of reaching its planning target, and it has several other programs under development.

Current Programs and Long-Term Planning

Metropolitan currently has several Central Valley/SWP storage programs in operation. Metropolitan is also pursuing a new storage program with Mojave Water Agency, and it is currently under development. In addition, Metropolitan pursues Central Valley water transfers on an as needed basis. Existing and planned storage and transfer programs include:

- ***Semitropic Storage Program***- Under this program, Metropolitan can store portions of its SWP entitlement water in excess of the amounds needed to meet its demands. The water is delivered to farmers in the Semitropic Water Storage District (SWSD) who use the water in lieu of pumping groundwater. During dry years, Metropolitan's previously stored water is returned to Metropolitan by direct groundwater pumping by the SWSD and the exchange of SWP entitlement water. The maximum storage capacity of the program is 350 TAF.
- ***Arvin-Edison Storage Program***- This program was amended in 2008 to include the South Canal Improvement Project, which increases reliability and improves the quality of water returned to the California Aqueduct. Metropolitan can use the program to store excess SWP Table A supplies during wet years. The water can either be directly recharged into the groundwater basin or delivered to farmers in the Arvin-Edison Water Storage District who use the water in-lieu of pumping groundwater. During dry years, the water is returned to Metropolitan by direct groundwater pumping or by exchange of surface water supplies. The program storage capacity is 350 TAF.
- ***San Bernardino Valley MWD Storage Program***- This program allows Metropolitan to purchase a portion of San Bernardino Valley Municipal Water District's SWP supply. The program has a minimum purchase provision of 20 TAF and can deliver up to 70 TAF, depending on hydrologic conditions. The agreement also allows Metropolitan to store up to 50 TAF of transfer water for use in dry years.
- ***Kern-Delta Water District Storage Program***- This program, currently under development, will allow Metropolitan to store up to 250 TAF of water and will be capable of providing 50 TAF of dry year supply. The water will be either directly recharged into the groundwater basin or delivered to Kern-Valley Water District farmers who use the water in-lieu of pumping groundwater. During dry years, MWDOC will return Metropolitan's previously stored water by direct groundwater pump-in return or by exchange of surface water supplies.

- ***Mojave Storage Program***- Currently operated as a demonstration program, the program will store SWP supply delivered in wet years for subsequent withdrawal during dry years. When fully developed, the program is expected to have a dry-year yield of 35 TAF depending on hydrologic conditions.
- ***Central Valley Transfer Programs***- Metropolitan expects to secure Central Valley water transfer supplies via spot markets and option contracts to meet its service area demands when necessary. Metropolitan secured water transfer supplies in 2003, 2005, 2008, and 2009 to fill anticipated supply shortfalls needed to meet service area demands. Metropolitan's recent water transfer activities in have demonstrated Metropolitan's ability to develop and negotiate water transfer agreements either working directly with the agricultural districts who are selling the water or through a statewide Drought Water Bank.

Available Supplies

Metropolitan's current Central Valley/SWP storage and transfer program supply capabilities under average year, single dry year, and multiple dry year hydrologies are shown below in Table 3-3. In developing the supply capabilities for the Metropolitan 2010 RUWMP, Metropolitan assumed a simulated median storage level going into each of the five-year increments based on the balances of supplies and demands.

Table 3-3: Metropolitan Central Valley/State Water Project and Transfer Programs

Source: Metropolitan 2010 RUWMP, Table 3-3

Central Valley/State Water Project Storage and Transfer Programs
Supply Projection
Year 2030
(acre-feet per year)

Hydrology	Multiple Dry Years (1990-92)	Single Dry Year (1977)	Average Year (1922-2004)
Current Programs			
San Bernardino Valley MWD Minimum Purchase	12,000	8,000	20,000
San Bernardino Valley MWD Option Purchase	12,000	11,000	29,000
Central Valley Storage and Transfers			
Semitropic Program	46,000	41,000	69,000
Arvin Edison Program	63,000	75,000	75,000
San Bernardino Valley MWD Program	16,000	49,000	49,000
Kern Delta Program	47,000	50,000	50,000
Subtotal of Current Programs	***196,000***	***234,000***	***292,000***
Programs Under Development			
Mojave Groundwater Storage Program	11,000	5,000	43,000
North of Delta/In-Delta Transfers	33,000	33,000	33,000
SBVMWD Central Feeder	5,000	5,000	5,000
Shasta Return	18,000	18,000	18,000
Semitropic Agricultural Water Reuse Demonstration	11,000	11,000	11,000
Subtotal of Proposed Programs	***78,000***	***72,000***	***110,000***
Maximum Supply Capability	**274,000**	**306,000**	**402,000**

3.2.5. Supply Reliability

In the Metropolitan RUWMP, Metropolitan evaluated supply reliability by projecting supply and demand conditions for the single- and multi-year drought cases based on conditions affecting the SWP (Metropolitan's largest and most variable supply). For this supply source, the single driest-year was 1977 and the three-year dry period was 1990-1992. The analyses also include Colorado River supplies under the same hydrologies. Metropolitan's analyses are illustrated in Tables 3-4, 3-5, and 3-6. These tables show that the region can provide reliable water supplies not only under normal conditions but also under both the single driest year and the multiple dry year hydrologies.

Table 3-4: Metropolitan Average Year Projected Supply Capability and Demands for 2015 to 2035

AverageYear
Supply Capability[1] and Projected Demands
Average of 1922-2004 Hydrologies
(acre-feet per year)

Forecast Year	2015	2020	2025	2030	2035
Current Programs					
In-Region Storage and Programs	685,000	931,000	1,076,000	964,000	830,000
California Aqueduct[2]	1,550,000	1,629,000	1,763,000	1,733,000	1,734,000
Colorado River Aqueduct					
Colorado River Aqueduct Supply[3]	1,507,000	1,529,000	1,472,000	1,432,000	1,429,000
Aqueduct Capacity Limit[4]	*1,250,000*	*1,250,000*	*1,250,000*	*1,250,000*	*1,250,000*
Colorado River Aqueduct Capability	1,250,000	1,250,000	1,250,000	1,250,000	1,250,000
Capability of Current Programs	3,485,000	3,810,000	4,089,000	3,947,000	3,814,000
Demands					
Firm Demands of Metropolitan	1,826,000	1,660,000	1,705,000	1,769,000	1,826,000
IID-SDCWA Transfers and Canal Linings	180,000	273,000	280,000	280,000	280,000
Total Demands on Metropolitan[5]	2,006,000	1,933,000	1,985,000	2,049,000	2,106,000
Surplus	1,479,000	1,877,000	2,104,000	1,898,000	1,708,000
Programs Under Development					
In-Region Storage and Programs	206,000	306,000	336,000	336,000	336,000
California Aqueduct	382,000	383,000	715,000	715,000	715,000
Colorado River Aqueduct					
Colorado River Aqueduct Supply[3]	187,000	187,000	187,000	182,000	182,000
Aqueduct Capacity Limit[4]	*0*	*0*	*0*	*0*	*0*
Colorado River Aqueduct Capability	0	0	0	0	0
Capability of Proposed Programs	588,000	689,000	1,051,000	1,051,000	1,051,000
Potential Surplus	2,067,000	2,566,000	3,155,000	2,949,000	2,759,000

[1] Represents Supply Capability for resource programs under listed year type.

[2] California Aqueduct includes Central Valley transfers and storage program supplies conveyed by the aqueduct.

[3] Colorado River Aqueduct includes water management programs, IID-SDCWA transfers and canal linings conveyed by the aqueduct.

[4] Maximum CRA deliveries limited to 1.25 MAF including IID-SDCWA transfers and canal linings.

[5] Firm demands are adjusted to include IID-SDCWA transfers and canal linings. These supplies are calculated as local supply, but need to be shown for the purposes of CRA capacity limit calculations without double counting.

Source: Metropolitan 2010 RUWMP, Table 2-11

Table 3-5: Metropolitan Single-Dry Year Projected Supply Capability and Demands for 2015 to 2035

Single Dry-Year
Supply Capability[1] and Projected Demands
Repeat of 1977 Hydrology
(acre-feet per year)

Forecast Year	2015	2020	2025	2030	2035
Current Programs					
In-Region Storage and Programs	685,000	931,000	1,076,000	964,000	830,000
California Aqueduct[2]	522,000	601,000	651,000	609,000	610,000
Colorado River Aqueduct					
Colorado River Aqueduct Supply[3]	1,416,000	1,824,000	1,669,000	1,419,000	1,419,000
Aqueduct Capacity Limit[4]	*1,250,000*	*1,250,000*	*1,250,000*	*1,250,000*	*1,250,000*
Colorado River Aqueduct Capability	1,250,000	1,250,000	1,250,000	1,250,000	1,250,000
Capability of Current Programs	**2,457,000**	**2,782,000**	**2,977,000**	**2,823,000**	**2,690,000**
Demands					
Firm Demands of Metropolitan	1,991,000	1,889,000	1,921,000	1,974,000	2,039,000
IID-SDCWA Transfers and Canal Linings	180,000	273,000	280,000	280,000	280,000
Total Demands on Metropolitan[5]	**2,171,000**	**2,162,000**	**2,201,000**	**2,254,000**	**2,319,000**
Surplus	**286,000**	**620,000**	**776,000**	**569,000**	**371,000**
Programs Under Development					
In-Region Storage and Programs	206,000	306,000	336,000	336,000	336,000
California Aqueduct	556,000	556,000	700,000	700,000	700,000
Colorado River Aqueduct					
Colorado River Aqueduct Supply[3]	187,000	187,000	187,000	182,000	182,000
Aqueduct Capacity Limit[4]	*0*	*0*	*0*	*0*	*0*
Colorado River Aqueduct Capability	0	0	0	0	0
Capability of Proposed Programs	**762,000**	**862,000**	**1,036,000**	**1,036,000**	**1,036,000**
Potential Surplus	**1,048,000**	**1,482,000**	**1,812,000**	**1,605,000**	**1,407,000**

[1] Represents Supply Capability for resource programs under listed year type.

[2] California Aqueduct includes Central Valley transfers and storage program supplies conveyed by the aqueduct.

[3] Colorado River Aqueduct includes water management programs, IID-SDCWA transfers and canal linings conveyed by the aqueduct.

[4] Maximum CRA deliveries limited to 1.25 MAF including IID-SDCWA transfers and canal linings.

[5] Firm demands are adjusted to include IID-SDCWA transfers and canal linings. These supplies are calculated as local supply, but need to be shown for the purposes of CRA capacity limit calculations without double counting.

Source: Metropolitan 2010 RUWMP, Table 2-19

Table 3-6: Metropolitan Multiple-Dry Year Projected Supply Capability and Demands for 2015 to 2035

Multiple Dry-Year
Supply Capability[1] and Projected Demands
Repeat of 1990-1992 Hydrology
(acre-feet per year)

Forecast Year	2015	2020	2025	2030	2035
Current Programs					
In-Region Storage and Programs	246,000	373,000	435,000	398,000	353,000
California Aqueduct[2]	752,000	794,000	835,000	811,000	812,000
Colorado River Aqueduct					
Colorado River Aqueduct Supply[3]	1,318,000	1,600,000	1,417,000	1,416,000	1,416,000
Aqueduct Capacity Limit[4]	*1,250,000*	*1,250,000*	*1,250,000*	*1,250,000*	*1,250,000*
Colorado River Aqueduct Capability	1,250,000	1,250,000	1,250,000	1,250,000	1,250,000
Capability of Current Programs	**2,248,000**	**2,417,000**	**2,520,000**	**2,459,000**	**2,415,000**
Demands					
Firm Demands of Metropolitan	2,056,000	1,947,000	2,003,000	2,059,000	2,119,000
IID-SDCWA Transfers and Canal Linings	180,000	241,000	280,000	280,000	280,000
Total Demands on Metropolitan[5]	**2,236,000**	**2,188,000**	**2,283,000**	**2,339,000**	**2,399,000**
Surplus	**12,000**	**229,000**	**237,000**	**120,000**	**16,000**
Programs Under Development					
In-Region Storage and Programs	162,000	280,000	314,000	336,000	336,000
California Aqueduct	242,000	273,000	419,000	419,000	419,000
Colorado River Aqueduct					
Colorado River Aqueduct Supply[3]	187,000	187,000	187,000	182,000	182,000
Aqueduct Capacity Limit[4]	*0*	*0*	*0*	*0*	*0*
Colorado River Aqueduct Capability	0	0	0	0	0
Capability of Proposed Programs	**404,000**	**553,000**	**733,000**	**755,000**	**755,000**
Potential Surplus	**416,000**	**782,000**	**970,000**	**875,000**	**771,000**

[1] Represents Supply Capability for resource programs under listed year type.

[2] California Aqueduct includes Central Valley transfers and storage program supplies conveyed by the aqueduct.

[3] Colorado River Aqueduct includes water management programs, IID-SDCWA transfers and canal linings conveyed by the aqueduct.

[4] Maximum CRA deliveries limited to 1.25 MAF including IID-SDCWA transfers and canal linings.

[5] Firm demands are adjusted to include IID-SDCWA transfers and canal linings. These supplies are calculated as local supply, but need to be shown for the purposes of CRA capacity limit calculations without double counting.

Source: Metropolitan 2010 RUWMP, Table 2-10

3.2.6. MWDOC's Imported Water Supply Projections

California Water Code section 10631 (k) requires Metropolitan to provide information to MWDOC for inclusion in its UWMP that identifies and quantifies the existing and planned sources of water available from the wholesale agency. Table 3-5 indicates Metropolitan's water availability projections by source for the next 25 years as provided to MWDOC. These supply projections include only the supply Metropolitan projects will be needed to serve MWDOC. Metropolitan's projected supplies to serve MWDOC are lower than MWDOC's projected demands on Metropolitan due to Metropolitan's assumption of a 20 percent reduction in demands by 2020.

Based on Metropolitan's supply projections, MWDOC will be able to meet demands under average year, single dry year, and multiple dry year scenarios. The water supply projections shown in Table 3-7 represent the amount of supplies projected to meet MWDOC demands, as MWDOC will only purchase the amount of water needed to meet demands from Metropolitan.

Table 3-7: Wholesaler Identified & Quantified Existing and Planned Sources of Water (AFY)

Wholesaler Sources	Fiscal Year Ending				
	2015	2020	2025	2030	2035
Imported Water from Metropolitan	225,697	234,454	243,853	247,545	250,519

3.3. Groundwater

Among all local supplies available to MWDOC's member agencies, groundwater supplies the most water. The water supply resources in MWDOC's service area are enhanced by the existence of four groundwater basins, which provide a reliable local source and, additionally, are used as reservoirs to store water during wet years and storage to draw on during dry years. This section describes the four groundwater basins utilized by MWDOC's member agencies and provides information on historical groundwater production as well as a 25-year projection of the service area's groundwater supply.

3.3.1. Lower Santa Ana River Groundwater Basin

The Lower Santa Ana Groundwater Basin, also known as the Orange County Groundwater Basin (Basin) underlies the north half of Orange County beneath broad lowlands. The Basin covers an area of approximately 350 square miles, bordered by the Coyote and Chino Hills to the north, the Santa Ana Mountains to the northeast, the Pacific Ocean to the southwest, and terminates at the Orange County line to the northwest, where its aquifer systems continue into the Central Basin of Los Angeles County. The aquifers comprising this Basin extend over 2,000 feet deep and form a

complex series of interconnected sand and gravel deposits. Figure 3-5 depicts the Lower Santa Ana Groundwater Basin.

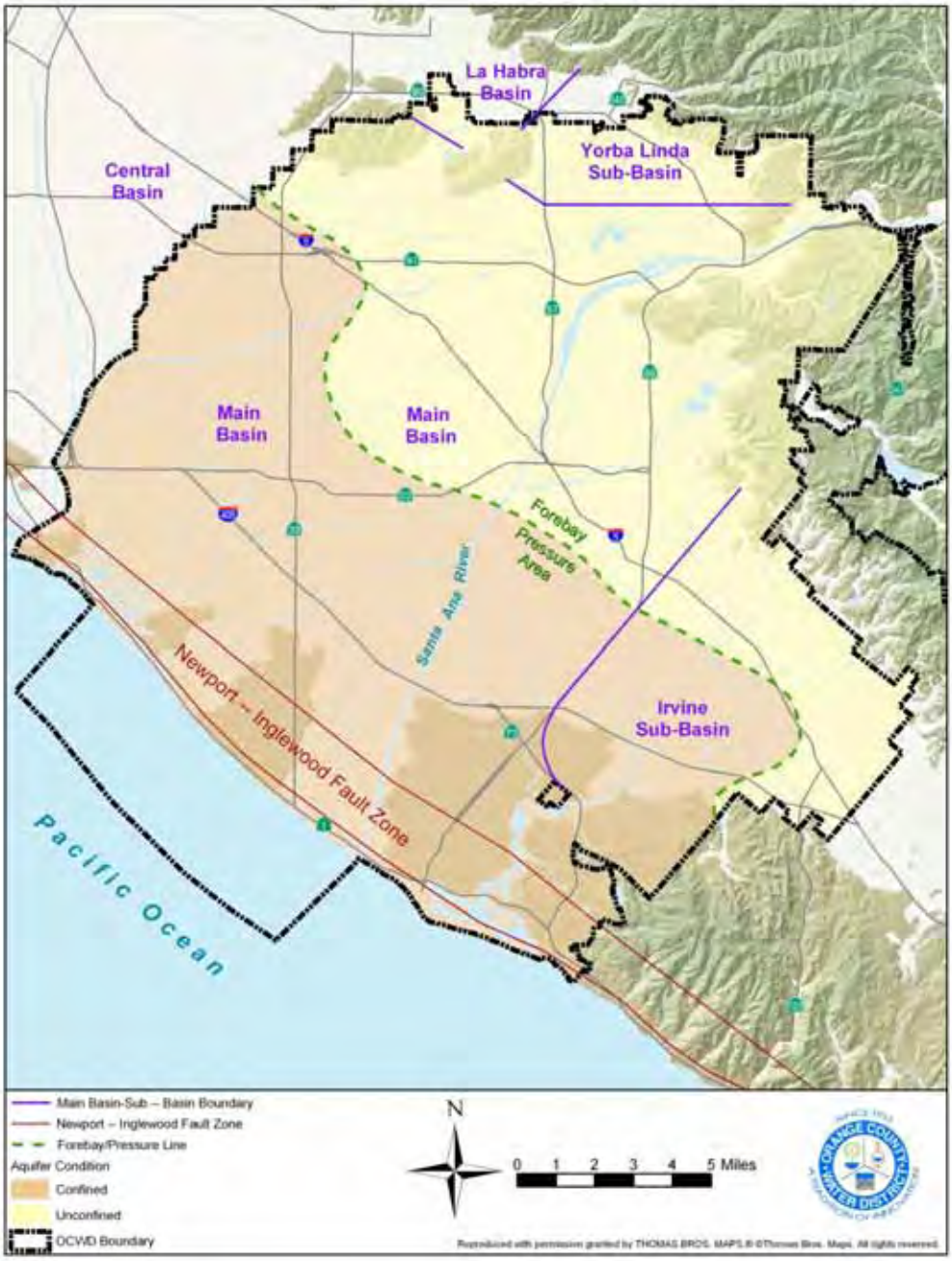

Figure 3-5: Lower Santa Ana Groundwater Basin

The OCWD was formed in 1933 by a special legislative act of the State of California Legislature to protect and manage the County's vast, natural, underground water supply with the best available technology and to defend its water rights to the Orange County

Groundwater Basin. This legislation is found in the State of California Statutes, Water – Uncodified Acts, Act 5683, as amended. The Basin is managed by OCWD under the Act, which functions as a statutorily-imposed physical solution. Section 77 of the Act states that, *'nothing in this act contained shall be so construed as to affect or impair the vested right of any person, association or corporation to the use of water.*

The Basin is managed by OCWD for the benefit of municipal, agricultural and private groundwater producers. The Basin meets approximately 60 to 70 percent of the water supply demand within the boundaries of OCWD. There are 19 major producers including cities, water districts, and private water companies, extracting water from the Basin serving a population of approximately 2.55 million.[9]

Groundwater levels are managed within a safe basin operating range to protect the long-term sustainability of the basin and to protect against land subsidence. In 2007, OCWD established a new methodology for calculating accumulated overdraft and establishing new full-basin benchmarks.[10] Based on OCWD's 2009 Groundwater Management Plan, the optimal accumulated overdraft is between 100,000 and 434,000 AF. At the top of the range, OCWD will be able to provide at least three years of drought supply. An accumulated overdraft condition minimizes the localized high groundwater levels and increases ability to recharge storm events from the Santa Ana River. At an accumulated overdraft of 200,000 AF, the Basin is considered 99.7 percent full. OCWD estimates that the Basin can safely be operated on a short-term emergency basis with a maximum accumulated overdraft of approximately 500,000 AF.

In an effort to eliminate long-term overdraft conditions, OCWD developed a comprehensive computer-based groundwater flow model to study and better understand the Basin's reaction to pumping and recharge. OCWD manages the Basin by establishing on an annual basis the appropriate level of groundwater production known as the Basin Production Percentage (BPP) as described below.

Basin Production Percentage

Since the Orange County Groundwater Basin is considered a "managed basin", no pumping right exists within the Basin. Total pumping from the basin is managed through a process that uses financial incentives to encourage groundwater producers to pump an aggregate amount of water that is sustainable without harming the Basin. The framework for the financial incentives is based on establishing the BPP which is the percentage of each Producer's total water supply that comes from groundwater pumped from the basin.

[9] MWDOC and Center for Demographics Research (2008)
[10] The *Report on Evaluation of Orange County Groundwater Basin Storage and Operational Strategy*, published in February 2007,

Groundwater production at or below the BPP is assessed the Replenishment Assessment (RA). While there is no legal limit as to how much an agency could pump from the Basin, there is a financial disincentive to pumping above the BPP. Pumping above the BPP is also assessed a Basin Equity Assessment (BEA), which is calculated so that the cost of groundwater production is equal to MWDOC's melded rate.

The BPP is set uniformly for all Producers by OCWD on an annual basis. The BPP for the 2008-2009 water year (July 1, 2008 to June 30, 2009) was established at 69 percent of a producer's total water demand. The overall BPP achieved within OCWD for non-irrigation use in the 2008-09 water year was equal to 72.5 percent. The BPP has recently been set at 62 percent for the 2010-2011 water year. For the purpose of this RUWMP, the BPP is assumed to be 62 percent for the entire 25-year planning horizon (Table 3-8).

Table 3-8: Current Basin Production Percentage

Basin Name	Basin Production Percentage
Orange County Groundwater Basin	62%
Total	**62%**

The BPP is set based on groundwater conditions, availability of imported water supplies, and Basin management objectives. The BPP is also a major factor in determining the cost of groundwater production from the Basin for that year. When Metropolitan has an abundance of water, it may choose to activate its Groundwater Replenishment Program or its In-Lieu Program, where imported water is purchased in-lieu of pumping groundwater.

In some cases, OCWD encourages the pumping and treatment of groundwater that does not meet drinking water standards (prior to treatment) in order to protect water quality. This is achieved by using a financial incentive called the BEA Exemption. A BEA Exemption is used to encourage pumping of groundwater that does not meet drinking water standards in order to clean up and contain the spread of poor quality water. OCWD uses a partial or total exemption of the BEA to compensate a qualified participating agency or Producer for the costs of treating poor-quality groundwater. When OCWD authorizes a BEA exemption for a project, it is obligated to provide the replenishment water for the production above the BPP and forgoes the BEA revenue that OCWD would otherwise receive from the producer.

Recharge Management

The Basin is recharged by multiple sources. These include artificial, i.e., man-made systems, and incidental or natural recharge. One of OCWD's core activities is refilling or replenishing the Basin to balance the removal of groundwater by pumping.

OCWD currently owns and operates more than 1,000 acres of recharge facilities in and adjacent to the Santa Ana River and Santiago Creek. Historical groundwater flow was generally toward the ocean in the southwest, but modern pumping has caused groundwater levels to drop below sea level inland of the Newport-Inglewood fault zone. This trough-shaped depression encourages sea water to migrate inland, which if unchecked, could contaminate the groundwater supply. Strategic lines of wells in the Alamitos and Talbert Gaps inject imported and reclaimed water to create a mound of water seaward of the pumping trough to protect the Basin from seawater intrusion. In addition to operating the percolation system, OCWD also operates the Talbert Barrier in Fountain Valley and Huntington Beach, and participates in the financing operation of the Alamitos Barrier in Seal Beach and Long Beach. The barriers help prevent seawater intrusion and also help refill the Basin.

Sources of recharge water include Santa Ana River (SAR) baseflow and storm flow, Santiago Creek Flows, imported supplies purchased from Metropolitan, supplemental supplies from the upper SAR Watershed, and purified water from recycled plants.

Imported Water from Metropolitan via MWDOC is one source of groundwater replenishment. OCWD is able to increase allowable pumping from the Basin, above the natural safe yield, via the purchase of replenishment water. Delivery of replenishment water is interruptible and is not always available. When surplus replenishment water is not available for extended periods, OCWD continues to allow pumping above the Groundwater Basin's natural safe yield. Under this operation, the Orange County Basin draws on stored water to sustain this level of pumping. Depending on the severity of the drought and local supply conditions, this operation can be sustained for two to three years before the Basin reaches significant overdraft (greater than 500,000 acre-feet storage level). OCWD must then cut back pumping until refill of the Basin occurs via heavy rainfall or when the replenishment supply becomes available from Metropolitan. This close coordination of the Basin's operation with the Metropolitan replenishment program benefits the local service area with enhanced pumping levels in most years. Metropolitan also sells treated non-interruptible water to OCWD for injection into the Talbert Seawater Barrier. This water assists in the protection of the Basin from seawater intrusion.

Direct replenishment water is received at OCWD's recharge facilities in the cities of Anaheim and Orange and is physically recharged into the Basin through percolation.

3.3.2. San Juan Basin

The San Juan Basin is located in southern Orange County within the San Juan Creek Watershed and is comprised of four sub-basins: Upper San Juan, Middle San Juan, Lower San Juan and Lower Trabuco. The basin is bounded on the west by the Pacific Ocean and otherwise by tertiary semi-permeable marine deposits. San Juan Creek drains the San Juan Valley, and several other creeks drain valley tributaries to the San Juan.

The primary water-bearing unit within the Basin is Quanternary alluvium - a heterogeneous mixture of sand, silt, and gravel in the eastern portion of the basin to coarse sand near the center to fine-grained lagoonal sediments in the western portion of the basin. Thickness of the alluvium average about 65 feet and may reach more than 125 feet. The total storage capacity has been estimated to be 90,000 AF. Wells typically yield from 450 to 1,000 gpm.

Recharge of the Basin is from flow in San Juan Creek, Oso Creek, and Arroyo Trabuco and precipitation to the valley floor. Water from springs flows directly from Hot Spring Canyon into San Juan Creek adding to recharge.

Figure 3-6 depicts the San Juan Basin.

Figure 3-6: San Juan Basin

Basin Management

The State Water Resources Control Board (SWRCB) has determined that the San Juan Creek watershed is not a groundwater basin, but a surface and underground flowing stream and, therefore, it is subject to SWRCB jurisdiction and its processes with respect to the appropriation and use of waters within the watershed. The San Juan Basin Authority (SJBA) is a joint powers agency, formed in 1971 to manage the watershed. Member agencies include the City of San Juan Capistrano, Moulton Niguel Water District, Santa Margarita Water District, and South Coast Water District. SJBA has SWRCB Permit for Diversion and Use of Water Permit No. 21074 for appropriation and diversion of up to 8,026 AFY, with the ability to increase to 10,702 AFY upon demonstration of sufficient availability of unappropriated water.

Groundwater Budget

A study by NBS Lowry (1994) investigated and modeled the Basin for 1979 through 1990. They determined a mean pump extraction capacity of 5,621 AFY and a mean subsurface inflow of 2,246 AFY. Average subsurface outflow to the ocean is estimated to be about 450 AFY.

SJBA approved the San Juan Basin Groundwater Management and Facility Plan (GMFP) in 1995. GMFP represents the first step in the implementation of the SJBA mission to develop and maintain a reliable, good quality and economical local water supply for the residents in the Basin by maximizing use of local ground and surface water, the San Juan Creek and its tributaries, with due consideration for the preservation and enhancement of the environment, including, but not limited to, natural resources, fish and wildlife, infrastructure improvements and the cultural heritage of the area.

Groundwater Production

The SJBA completed Phase I of San Juan Basin Desalter Project in December 2004. The current capacity of the plant is projected to reach 4,900 AFY. Depending on the condition of the basin after the implementation of the San Juan Basin Groundwater Management and Facility Plan, future expansion of the production may be possible. Additionally, SCWD constructed a 1 million gallons per day (MGD) Groundwater Recovery Facility (GRF) that came online in FY 2007-2008. The GRF was built initially for 1,300 AFY but production is currently limited to about 800 AFY by water rights restrictions and the capacity of a single well. The plant extracts and treats brackish groundwater using Reverse Osmosis and iron and manganese removal due to high mineral content. SCWD plans to expand the GRF facilities as well as adding another well. When complete, the project is expected to extract up to 2,000 AFY from the basin. Expansion of production requires either agreement with SJBA or confirmation of an additional water right by the State Water Resources Control Board.

3.3.3. La Habra Basin

No groundwater management plan is available for the La Habra Basin. However, the following sections are written, with assistance from the City of La Habra, to describe the basin.

La Habra Groundwater Basin Geology

From a structural geology standpoint, the La Habra Basin area is dominated by the northwest trending La Habra Syncline (a U–shaped down–fold) which is bounded on the north by the Puente Hills and on the south by the Coyote Hills. The fold is a naturally occurring trough, or valley, where significant quantities of groundwater have accumulated over the past 150,000 years. The La Habra Groundwater Basin consists of four major formations, which include bearing zones or aquifer units. These are the Alluvium, the La Habra Formation, the Coyote Hills Formation, and the San Pedro Formation.

Water levels of wells in the La Habra Formation have been measured between 100 and 200 feet below ground surface across the La Habra Basin area. Water levels in wells of the Coyote Hills Formation have been measured at about 120 feet below the ground surface. Pressure levels of confined groundwater in wells of the San Pedro aquifer zone range from about 100 to 200 feet below ground surface.

Currently, this non-adjudicated basin is serving the City of La Habra. The estimated long-term extraction supply is 4,500 AFY; however, the historical City of La Habra extraction rate is approximately 1,074 AFY (averaged over the past 15 years), which is considerably less than the potential yield. Thus, the La Habra Basin has not been identified to be in overdraft. In fact, the City plans to utilize the additional groundwater supply by increasing the capacity on the existing Idaho Street Well.

Full development of the La Habra Basin could eventually supply up to 40% of the City's current water demands. The City of La Habra currently plans to double production capacity for the Idaho Street Well from 1,200 to 2,400 AFY, which will increase reliance on local sources from 11% to 22% of total demands. Table 2-12 shows projections for water extracted from the La Habra Groundwater Basin.

3.3.4. Main San Gabriel Basin (California Domestic Water Company)

The Main San Gabriel Basin lies in eastern Los Angeles County. The hydrologic basin or watershed coincides with a portion of the upper San Gabriel River watershed, and the aquifer or groundwater basin underlies most of the San Gabriel Valley.

Surface area of the groundwater basin is approximately 167 square miles and has a fresh water storage capacity of the basin is estimated to be about 8.6 million acre-feet.

The physical groundwater basin is divided into two main parts, the Main Basin and the Puente Subbasin. The Puente Subbasin, lying in the southeast portion is hydraulically connected to the Main Basin. However, it is not the legal jurisdiction of the Main San Gabriel Basin Watermaster, and is thus considered a separate entity for management purposes.

The cities of Brea and La Habra obtain imported water from the Main San Gabriel Basin through the California Domestic Water Company (CDWC). The CDWC provides groundwater from the Main San Gabriel Basin to each of its member agencies who own or lease stock in the company. Each CDWC member agency receives a prescribed entitlement to water based upon the number of shares owned and the safe yield of the Main San Gabriel Basin. The member agency entitlement criterion per share varies year by year, based on CDWC's allotted percentage and the Basin Operating Safe Yield of the Main San Gabriel Basin. The Basin Operating Safe Yield is determined annually by the Main San Gabriel Basin Watermaster, the agency which was created by the Main San Gabriel Judgment to manage the Main San Gabriel Basin. Historically, this has been about 1.38 to 1.85 acre–feet per share. The voluntary adjudication of the Main San Gabriel Water Basin provided CDWC 5.60 percent of the basin's safe yield (with purchased water rights totaling 6.11 percent).

Figure 3-7 depicts the Main San Gabriel Basin.

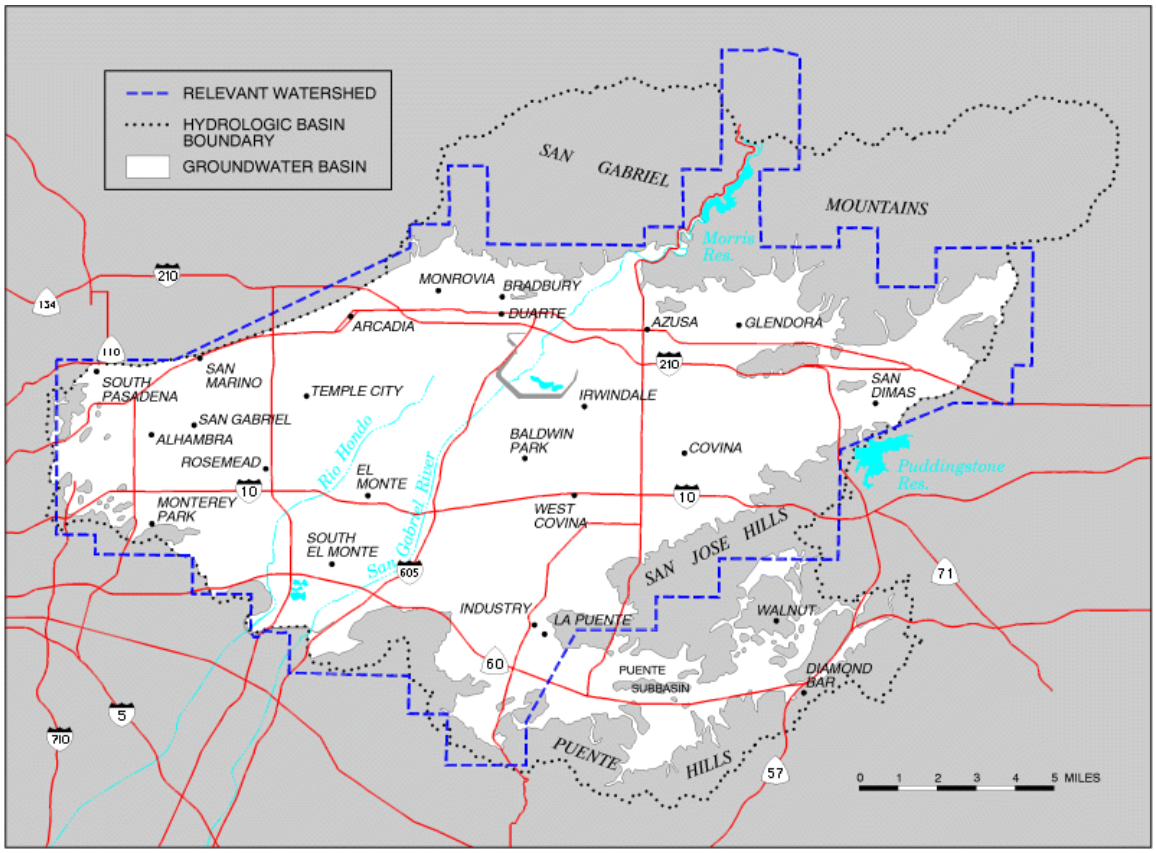

Figure 3-7: Main San Gabriel Basin

3.3.4.1. Main San Gabriel Basin Judgment

Rapid urbanization in the San Gabriel Valley in the 1940s caused an increased demand for groundwater drawn from the Main San Gabriel Basin from the Upper Area users. This resulted in the decrease in available water supply for the Lower Area and downstream users. In 1968, at the request of producers, the Upper San Gabriel Municipal Water District filed a complaint that would adjudicate water rights in the Basin and would bring all Basin producers under control of one governing body. The final result was the entry of the Main San Gabriel Basin Judgment in 1973.

The Judgment defined the water rights of 190 original parties to the legal action. It created a new governing body, the Main San Gabriel Basin Watermaster, and described a program for management of water in the Basin. The Main San Gabriel Basin Watermaster manages and controls the withdrawal and replenishment of water supplies in the Basin. It determines annually the Operating Safe Yield (the amount of groundwater

that can safely be extracted) for the succeeding fiscal year, and notifies the pumpers of their shares thereof.[11]

Under the terms of the Main San Gabriel Basin Judgment all rights to the diversion of surface water and production of groundwater within the Main Basin and its Relevant Watershed were adjudicated. The Main Basin Judgment does not restrict the quantity of water which Parties may extract from the Main Basin. Rather, it provides a means for replacing with Supplemental Water all annual extractions in excess of a Party's annual right to extract water. The Main Basin Watermaster annually establishes an Operating Safe Yield for the Main Basin which is then used to allocate to each Party its portion of the Operating Safe Yield which can be produced free of a Replacement Water Assessment. If a producer extracts water in excess of his right under the annual Operating Safe Yield, it must pay an assessment for Replacement Water, which is sufficient to purchase one acre-foot of Supplemental Water to be spread in the basin for each acre-foot of excess production. All water production is metered and is reported quarterly to the Main Basin Watermaster.

In addition to Replacement Water Assessments, the Main Basin Watermaster levies an Administration Assessment to fund the administration of the Main Basin management program under the Main Basin Judgment and a Make-up Obligation Assessment in order to fulfill the requirements for any make-up Obligation under the Long Beach Judgment and to supply fifty percent of the administration costs of the River Watermaster service. The Main Basin Watermaster levies an In-lieu Assessment and may levy special Administration Assessments.

Water rights under the Main Basin Judgment are transferable by lease or purchase so long as such transfers meet the requirements of the Judgment. There is also provision for Cyclic Storage Agreements by which Parties and non-parties may store imported supplemental water in the Main Basin under such agreements with the Main Basin Watermaster pursuant to uniform rules and conditions and Court approval.

3.3.5. San Mateo Basin

According to information provided by City of San Clemente, MWDOC concludes that no groundwater has been produced or projected to be produced from this basin.

3.3.6. Laguna Canyon Basin

No groundwater management plan is available for the Laguna Canyon Basin. However, the following is written, with assistance from Laguna Beach County Water District, to describe the basin.

[11] http://www.watermaster.org/projects.html

The Laguna Creek watershed lies in the San Joaquin Hills of southern Orange County. The drainage area of approximately 5,412 acres includes the Laguna Creek and Niguel Creek basins and is the largest stream basin to drain exclusively from the San Joaquin Hills into the ocean. The drainage basin is roughly 6.5 miles long and averages 1.5 miles wide between its boundaries. The upper or northern half of the basin is relatively wide with low subdued hills, whereas the lower half is narrow, with steep slopes forming Laguna Canyon. Elevations reach 1,000 feet above sea level in parts of the drainage basin.

The average annual rainfall is about 12 inches at Laguna Beach at the mouth of Laguna Creek and, at times, rainfall in the San Joaquin Hills is sufficient to cause sharp, damaging floods along Laguna Creek. In general, however, the drainage basin is dry with only sufficient water discharge to reflect losses from groundwater sources and urban runoff.

Historically, no groundwater has been produced from this basin. However, as augmenting local supply is becoming increasingly critical, Laguna Beach County Water District has proposed a project that will utilize the groundwater from this basin. Table 3-X shows the projected groundwater production from the basin provided by Laguna Beach County Water District.

3.3.7. Impaired Groundwater

The combined yield from the seven projects described below, was 17,864 acre-feet in 2010. This supply is expected to increase to 34,509 acre-feet at ultimate development of these projects. Since these projects are recovering groundwater, a similar amount must either be replenished on an average annual basis to maintain water balance or be salvaged from water that otherwise would flow into the ocean as subsurface outflow. The benefit of these projects is to provide a firm base supply, restore utilization of groundwater storage impaired by natural causes and/or agricultural drainage, improve conjunctive use storage operations, and provide a drought supply by the additional capacity to tap groundwater in storage.

Tustin Main Street Desalter - The City of Tustin currently operates two Desalter plants. The Main Street Treatment plant began operating in 1989 with a capacity of 2 MGD. The Main Street Desalter reduces nitrate levels from the groundwater produced by Tustin's Main Street wells. The untreated groundwater undergoes either Reverse Osmosis or Ion Exchange treatment.

Tustin 17th Street Desalter - The Tustin 17th Street Desalter began operating in 1996 with a capacity of 3 MGD. The Desalter plant reduces high nitrate and TDS concentrations from the groundwater pumped by Tustin's 17th Street wells. The 17th Street Desalter plant uses two Reverse Osmosis membrane trains to treat the groundwater.

Mesa Colored Water Treatment Facility **-** Mesa Consolidated Water District currently owns and operates a Colored Water Treatment Facility (CWTF) with a capacity of 5.8 MGD that removes color from the water using ozone treatment and biological filtration.

IRWD Deep Aquifer Treatment System **–** Irvine Ranch Water District's (IRWD) Deep Aquifer Treatment System (DATS) purifies drinking water from the lower aquifer of the Orange County Groundwater Basin. The water in this aquifer is very high quality, but has a brownish tint imparted from the remains of ancient vegetation. The DATS facility went on-line in 2002 and can treat up to 7.4 MGD from two wells that pump water from 2000 feet below ground level.

IRWD Irvine Desalter Project **-** The Irvine Desalter Project was completed in 2006 and purifies water found in the Irvine sub-basin of the larger Orange County groundwater basin. It is a two-part endeavor, with recycled water and drinking water components. The Irvine Desalter Potable Treatment Facility uses two reverse osmosis trains to produce 2.7 MGD by removing salts that are caused by natural geology and past agricultural use.

San Juan Basin Desalter **-** The Groundwater Recovery Plant (GWRP) came on-line in 2004, also known as the San Juan Basin Desalter, is a 5 MGD plant that is owned and operated by the City of San Juan Capistrano. The GWRP takes groundwater high in iron, manganese, and total dissolved solids using reverse osmosis and makes it suitable for potable water uses.

SCWD Capistrano Beach Desalter **-** SCWD currently owns and operates a 1 MGD GRF that came on-line in 2007, also known as the Capistrano Beach Desalter. The plant extracts brackish groundwater from an aquifer in the San Juan Basin and goes through iron and manganese removal due to high mineral content.

3.3.8. Recharge Facilities for OCWD Basin

Recharging water into the basin through natural and artificial means is essential to support pumping from the basin. Active recharge of groundwater began in 1949, in response to increasing drawdown of the basin and consequently the threat of seawater intrusion. In 1949, OCWD began purchasing imported Colorado River water from Metropolitan, which was delivered to Orange County via the Santa Ana River upstream of Prado Dam. The Basin's primary source of recharge is flow from the Santa Ana River. OCWD diverts river flows into recharge basins located in and adjacent to the Santa Ana River and its main Orange County tributary, Santiago Creek. Other sources of recharge water include natural infiltration and recycled water. Today OCWD owns and operates a network of recharge facilities that cover 1,067 acres. The recharge capacity has exceeded 10,000 AFY with the addition of the La Jolla Recharge Basin which came online in 2008. The La Jolla Recharge Basin is a 6-acre recharge basin.

One of OCWD's primary efforts has been the control of seawater intrusion into the Basin, especially via the Talbert and Alamitos seawater intrusion barriers. OCWD began addressing the Alamitos Gap intrusion by entering a partnership in 1965 with the Los Angeles County Flood Control District to operate injection wells in the Alamitos Gap. Operation of the injection wells forms a hydraulic barrier to seawater intrusion. To address seawater intrusion in the Talbert Gap, OCWD constructed Water Factory 21, a plant that treated secondary-treated water from the OCSD to produce purified water for injection. Water Factory 21 operated for approximately 30 years until it was taken off line in 2004. It was replaced by an advanced water treatment system, the GWRS.

The GWRS is a cooperative project between OCWD and OCSD that began operating in 2008. Secondary-treated wastewater from OCSD undergoes treatment consisting of microfiltration, reverse osmosis, and advanced oxidation with ultraviolet light and hydrogen peroxide. It is the largest water purification project of its kind, Phase 1 of the GWRS began operating in 2008 with a capacity of purifying 72,000 AFY of water. The GWRS provides recharge water for the Talbert Injection Barrier as well as to recharge basins in the City of Anaheim. The Expanded Talbert Injection Barrier included 8 new injection wells which operation began in 2008. The GWRS increased reliable, local water supplies available for barrier injection from 5 MGD to 30 MGD.

3.3.9. Metropolitan Groundwater Replenishment Program

In an effort to maximize local resources, Metropolitan has partnered with the cities of Anaheim, Fullerton, and Santa Ana, OCWD, and MWDOC and its member agencies who are groundwater producers in various programs to encourage the development of local resources. While MWDOC does not directly produce groundwater, it supports programs that maximize local resources to enhance reliability. OCWD, MWDOC, and Metropolitan have developed a successful and efficient groundwater replenishment program to increase storage in the Orange County Groundwater Basin. The Groundwater Replenishment Program allows Metropolitan to sell groundwater replenishment water to OCWD and make direct deliveries to agency distribution systems in lieu of producing water from the groundwater basin when surplus water is available. This program indirectly replenishes a basin by avoiding pumping. Because of the supply impacts from the recent drought conditions and Bay-Delta operational constraints, deliveries under the Replenishment Program were suspended in May 2007. Metropolitan is currently working with its member agencies on potential long-term revisions to the program.

3.3.10. Metropolitan Conjunctive Use Program

Since 2004, OCWD, MWDOC, and participating producers have participated in Metropolitan's Conjunctive Use Program (known as the Metropolitan Long-Term Groundwater Storage Program or Metropolitan CUP). This program allows for the storage of Metropolitan water into a Metropolitan storage account within the Orange County groundwater basin. The existing Metropolitan storage program provides for

Metropolitan to store up to 66,000 AF of water in the basin in exchange for Metropolitan's contribution to improvements in basin management facilities. These improvements included eight new groundwater production wells, improvements to the seawater intrusion barrier, construction of the Diemer Bypass Pipeline. This water can be withdrawn over a three-year time period.

3.3.11. Historical Groundwater Production

Table 3-9 shows MWDOC's service area recent groundwater production by the retail groundwater producers from all the Basins within the MWDOC service area in the past five years from 2005 to 2009. During certain seasons of 2005, 2006, and 2007, OCWD has operated the In-lieu Program with Metropolitan by purchasing water from Metropolitan to meet demands of member agencies rather than pumping water from the groundwater basin. In 2008 and 2009, OCWD did not utilize replenishment water because such water was not available to purchase from Metropolitan.[12]

Table 3-9: Amount of Groundwater Pumped in the Past 5 Years (AFY)

Basin Name(s)	Fiscal Year Ending				
	2005	2006	2007	2008	2009
Lower Santa Ana Basin	204,215	209,216	227,819	236,706	211,061
San Juan Basin	4,408	6,870	4,450	3,146	4,550
La Habra Basin	1,285	1,241	1,322	1,530	1,657
Main San Gabriel Basin (CDWC)	12,727	12,440	11,504	10,127	9,698
Total Groundwater	222,633	229,767	245,095	251,510	226,967
% of Total Water Supply	**47%**	**47%**	**46%**	**50%**	**47%**

3.3.12. Projections of Groundwater Production

Based on the annual MWDOC survey completed by each Producer in the spring of 2010, the estimated demand for groundwater in the OCWD boundary will increase from 519,000 AFY in 2015 to 558,000 AFY in 2035 representing a 7.5 percent increase over a 20 year period.

OCWD's estimated total annual groundwater production for the water year 2010-2011 is 295,000 AF based on a BPP of 62 percent and includes 22,000 AF of production from water quality improvement projects.

Table 3-10 shows the amount of groundwater projected to be pumped from all the Basins within MWDOC's service area in the next 25 years.

[12] *2008-2009 Engineer's Report on Groundwater conditions, Water Supply and Basin Utilization in the Orange County Water District*, February 2010

Table 3-10: Amount of Groundwater Projected to be Pumped (AFY)

Basin Name (s)	Fiscal Year Ending					
	2010	2015	2020	2025	2030	2035
Lower Santa Ana Basin	201,075	217,168	219,950	222,369	223,989	225,190
San Juan Basin	3,674	8,254	8,954	8,954	8,954	8,954
La Habra Basin	1,688	2,610	2,610	2,610	2,610	2,610
Main San Gabriel Basin (CDWC)	13,615	15,000	15,000	15,000	15,000	15,000
Total	220,052	243,032	246,514	248,933	250,553	251,754
% of Total Water Supply	**45%**	**46%**	**45%**	**45%**	**44%**	**44%**

3.4. Surface Water

MWDOC does not use surface water for its water supply. However, surface water provides an additional local source to some MWDOC member agencies, including IRWD, Serrano Water District, Trabuco Canyon Water District, and the City of Orange. Surface water supplies in Orange County are captured mostly from Santiago Creek into Santiago Reservoir (a.k.a. Irvine Lake) and some reclaimed from local streams and urban runoff in south Orange County (in the Santa Margarita Water District service area).

There are a few other dams located on the smaller streams throughout the County; however, these are generally only for flood control or local agricultural use. Effort has been made in exploring the opportunity for increasing utilization of water in San Juan Basin in south Orange County through the development of desalters and percolation basins.

Table 3-11 shows the projected surface supply in 5-year increments from 2010 to 2035.

Table 3-11: Projected Surface Water Production in MWDOC's Service Area (AFY)

	Fiscal Year Ending					
	2010	2015	2020	2025	2030	2035
Surface Water	5,485	6,100	6,100	6,100	6,100	6,100
% of Total Water Supply	**1%**	**1%**	**1%**	**1%**	**1%**	**1%**

3.5. Recycled Water

Orange County is the leader in water recycling in the State of California, in both quantity and innovation. Water supply and wastewater treatment agencies in Orange County have received well-deserved recognition in the field of water reclamation and reuse.

Recycled water is widely accepted as a water supply source throughout MWDOC's service area. In the past, recycled water was mainly used for landscape irrigation. IRWD, a MWDOC member agency, is also at the forefront of using recycled water not only for irrigation, but also for other uses such as toilet flushing and commercial needs. Recycled water in MWDOC's service area is treated to various levels dependent upon the ultimate end use and in accordance with Title 22 regulation.

Recycled water is an important source of local water for the region. Current use of recycled water within MWDOC's service area is approximately 40,000 acre-feet per year and is expected to increase to about 60,000 acre-feet per year by 2035, an increase of 50%. Recycled water programs in the region are more fully described in Section 6.

3.6. Transfer and Exchange

A few MWDOC member agencies have also expressed interests in pursuing transfers of water from outside of the region. MWDOC will continue to help its member agencies in developing these opportunities and ensuring their success. In fulfilling this role, MWDOC will look to help its member agencies navigate the operational and administrative issues of wheeling water through the Metropolitan water distribution system.

Santa Margarita Water District **-** SMWD has actively pursued additional water supply reliability through water transfers and successfully completed water transfers in the late 1990's through the Metropolitan system. At present the future of such transfers as a reliable and cost-effective means of providing the basic supply are uncertain, however, transfer with specific purposes, such as supplementing dry year supplies can be effective. SMWD will continue to pursue water transfers as an alternative water supply and is currently working with MWDOC and other agencies to investigate possible transfers. The Supplemental Dry Year Agreements are transfer agreements that are triggered under specific conditions when supplies from Metropolitan are limited. Cucamonga County Water District and Golden State Water Company (GSWC) will utilize groundwater in lieu of taking delivery of imported water from Metropolitan. SMWD has a transfer agreement with Cucamonga County Water District of 4,250 AFY, both short term and long term. SMWD also has a short term transfer agreement with GSWC of 2,000 AFY.

3.7. Supply Reliability

3.7.1. Overview

It is required that every water supplier assess the reliability to provide water service to its customers under normal, dry, and multiple dry water years. MWDOC's service area depends on a combination of imported and local supplies to meet its water demands and has taken numerous steps to ensure its member agencies have adequate supplies. Development of groundwater, groundwater recovery, recycled water systems,

desalination opportunities, and collection of urban return flows augment the reliability of the imported water system. There are various factors that may impact reliability of supplies such as legal, environmental, water quality and climatic which are discussed below. The water supplies are projected to meet full-service demands; Metropolitan's 2010 RUWMP finds that Metropolitan is able to meet with existing supplies, full-service demands of its member agencies starting 2015 through 2035 during normal years, single dry year, and multiple dry years.

Metropolitan's 2010 Integrated Water Resources Plan (IRP) update describes the core water resource strategy that will be used to meet full-service demands at the retail level under all foreseeable hydrologic conditions from 2015 through 2035. The foundation of Metropolitan's resource strategy for achieving regional water supply reliability has been to develop and implement water resources programs and activities through its IRP preferred resource mix. This preferred resource mix includes conservation, local resources such as water recycling and groundwater recovery, Colorado River supplies and transfers, SWP supplies and transfers, in-region surface reservoir storage, in-region groundwater storage, out-of-region banking, treatment, conveyance and infrastructure improvements. MWDOC is reliant on Metropolitan for all of its imported water. With the addition of planned supplies under development, Metropolitan's 2010 RUWMP finds that Metropolitan will be able to meet full-service demands from 2015 through 2035, even under a repeat of the worst drought. Table 3-12 shows the reliability of the wholesaler's supply for single dry year and multiple dry year scenarios.

Table 3-12: Wholesaler Supply Reliability in Meeting Full Service Demands- % of Normal AFY

		Multiple Dry Water Years		
Wholesaler Sources	**Single Dry**	**Year 1**	**Year 2**	**Year 3**
Metropolitan	100%	100%	100%	100%

In addition to meeting full-service demands from 2015 through 2035, Metropolitan projects reserve and replenishment supplies to refill system storage. Table 3-13 shows the basis of water year data used to predict drought supply availability.

Table 3-13: Basis of Water Year Data

Water Year Type	Base Year	Base Year	Base Year
Normal Water Year	Average 1922-2004		
Single-Dry Water Year	1977		
Multiple-Dry Water Years	1990	1991	1992

3.7.2. Factors Contributing to Reliability

The Act requires a description of the reliability of the water supply and vulnerability to seasonal or climatic shortage. MWDOC relies on import supplies provided by Metropolitan. The following are some of the factors identified by Metropolitan that may have an impact on the reliability of Metropolitan supplies.

Environment – Endangered species protection needs in the Sacramento-San Joaquin River Delta have resulted in operational constraints to the SWP system. The Bay-Delta's declining ecosystem caused by agricultural runoff, operation of water pumps and other factors has led to historical restrictions in SWP supply deliveries. SWP delivery restrictions due to the biological opinions resulted in the loss of about one-third of the available SWP supplies in 2008.

Legal – Listings of additional species under the Endangered Species Act and new regulatory requirements could impact SWP operations by requiring additional export reductions, releases of additional water from storage or other operational changes impacting water supply operations. Additionally, the Quantification Settlement Agreement has been challenged in courts and may have impacts on the Imperial Irrigation District and San Diego County Water Authority transfer. If there are negative impacts, San Diego could become more dependent on the Metropolitan supplies.

Water Quality –Water imported from the Colorado River Aqueduct (CRA) contains high level of salts. The operational constraint is that this water needs to be blended with SWP supplies to meet the target salinity of 500 mg/L of total dissolved solids (TDS). Another water quality concern is related to the quagga mussel. Controlling the spread and impacts of quagga mussels within the Colorado River Aqueduct requires extensive maintenance and results in reduced operational flexibility.

Climate Change – Changing climate patterns are expected to shift precipitation patterns and affect water supply. Unpredictable weather patterns will make water supply planning even more challenging. The areas of concern for California include the reduction in Sierra Nevada snowpack, increased intensity and frequency of extreme weather events, and rising sea levels causing increased risk of levee failure.

Legal, environmental, and water quality issues may have impacts on Metropolitan supplies. It is felt, however, that climatic factors would have more of an impact than the others. Climatic conditions have been projected based on historical patterns; however severe pattern changes may occur in the future. Table 3-14 shows the factors resulting in inconsistency of supply.

Table 3-14: Factors Resulting in Inconsistency of Supply

Name of Supply	Legal	Environmental	Water Quality	Climatic
State Water Project	X	X		
Colorado River			X	X

These and other factors are addressed in greater detail in Metropolitan's 2010 RUWMP.

3.7.2.1. Water Quality

Imported Water - Metropolitan is responsible for providing water of a high quality throughout its service area. The water that Metropolitan delivers is tested both for currently regulated contaminants and for additional contaminants of concern as over 300,000 water quality tests are conducted each year to regulate the safety of its waters. Metropolitan's supplies originate primarily from the Colorado River Aqueduct (CRA) and from the State Water Project (SWP). A blend of these two sources, proportional to each year's availability of the source, is then delivered throughout Metropolitan's service area.

Metropolitan's primary sources face individual water quality issues of concern. The CRA water source contains a higher level of total dissolved solids (TDS) and a lower level of organic material while the SWP contains a lower TDS level while its level or organic materials is much higher, lending to the formation of disinfection byproducts. To remediate the CRA's high level of salinity and the SWP's high level of organic materials, Metropolitan has been blending CRA water with SWP supplies as well as implementing updated treatment processes to decrease the disinfection byproducts. In addition, Metropolitan has been engaged in efforts to protect its Colorado River supplies from threats of uranium, perchlorate, and chromium VI while also investigating the potential water quality impact of emerging contaminants, N-nitrosodimethylamine (NDMA) and pharmaceuticals and personal care products (PPCPs). Metropolitan has assured its ability to overcome the above mentioned water quality concerns through its protection of source waters, implementation of improved treatment processes, and blending of its two sources. While unforeseeable water quality issues could alter reliability, Metropolitan's current strategies ensure the deliverability of high quality water.

Table 3-15 shows the amount in acre-feet per year that water quality would have on supply.

Table 3-15: Water Quality – Current and Projected Water Supply Impacts (AFY)

Water Source	Fiscal Year Ending					
	2010	2015	2020	2025	2030	2035
Metropolitan	0	0	0	0	0	0

3.7.3. Normal-Year Reliability Comparison

MWDOC's service area receives imported water from Metropolitan via the regional distribution system. Although pipeline capacity rights do not guarantee the availability of water, per se, they do guarantee the ability to convey water when it is available to the Metropolitan distribution system. All imported water supplies assumed in this section are available to MWDOC's service area from existing water transmission facilities. Table 3-16 shows supply and demand under normal year conditions. Water supplies are projected to be available from Metropolitan; however, it is not included here since projected supplies meet projected demands.

Table 3-16: Projected Normal Water Supply and Demand (AFY)

	Fiscal Year Ending				
	2015	2020	2025	2030	2035
Total Demand	**526,487**	**542,767**	**558,210**	**563,690**	**567,970**
Groundwater	243,032	246,514	248,933	250,553	251,754
Surface Water	6,100	6,100	6,100	6,100	6,100
Recycled Water	51,658	55,699	59,324	59,492	59,597
Imported	225,697	234,454	243,853	247,545	250,519
Total Supply	526,487	542,767	558,210	563,690	567,970

3.7.4. Single Dry-Year Reliability Comparison

MWDOC's service area has documented that it is 100% reliable for single dry year demands from 2015 through 2035 with a demand bump percentage of 6.6% using FY 2001-02 as the single dry year. Table 3-17 compiles supply and demand projections for a single dry water year. The available imported supply is greater than shown; however, it is not included because all demands are met.

Table 3-17: Projected Single-Dry Year Water Supply and Demand (AFY)

	Fiscal Year Ending				
	2015	2020	2025	2030	2035
Total Demand	**561,235**	**578,590**	**595,052**	**600,894**	**605,456**
Groundwater	243,032	246,514	248,933	250,553	251,754
Surface Water	6,100	6,100	6,100	6,100	6,100
Recycled Water	51,658	55,699	59,324	59,492	59,597
Imported	260,445	270,277	280,695	284,749	288,005
Total Supply	561,235	578,590	595,052	600,894	605,456

3.7.5. Multiple Dry-Year Reliability Comparison

MWDOC's service area is capable of providing their customers all their demands with significant reserves in multiple dry years from 2015 through 2035 with a demand bump percentage of 6.6% in each of the three years using FY 2001-02 as the multiple dry years. This is true even if the demand projections were to be increased by a large margin. Table 3-18 shows supply and demand projections under multiple dry year conditions.

Table 3-18: Projected Multiple Dry Year Period Supply and Demand (AFY)

		Fiscal Year Ending				
		2015	2020	2025	2030	2035
First Year Supply	**Total Demand**	**561,235**	**578,590**	**595,052**	**600,894**	**605,456**
	Groundwater	243,032	246,514	248,933	250,553	251,754
	Surface Water	6,100	6,100	6,100	6,100	6,100
	Recycled Water	51,658	55,699	59,324	59,492	59,597
	Imported	260,445	270,277	280,695	284,749	288,005
	Total Supply	561,235	578,590	595,052	600,894	605,456
Second Year Supply	**Total Demand**	**561,235**	**578,590**	**595,052**	**600,894**	**605,456**
	Groundwater	243,032	246,514	248,933	250,553	251,754
	Surface Water	6,100	6,100	6,100	6,100	6,100
	Recycled Water	51,658	55,699	59,324	59,492	59,597
	Imported	260,445	270,277	280,695	284,749	288,005
	Total Supply	561,235	578,590	595,052	600,894	605,456
Third Year Supply	**Total Demand**	**561,235**	**578,590**	**595,052**	**600,894**	**605,456**
	Groundwater	243,032	246,514	248,933	250,553	251,754
	Surface Water	6,100	6,100	6,100	6,100	6,100
	Recycled Water	51,658	55,699	59,324	59,492	59,597
	Imported	260,445	270,277	280,695	284,749	288,005
	Total Supply	561,235	578,590	595,052	600,894	605,456

4. **Demand Management Measures**

4.1. Overview

California's water is a valuable and limited natural resource. There is a continuing need to conserve and efficiently utilize existing water supplies. Interest in water use efficiency (conservation or demand management measures) has been heightened by the growing need for water throughout California. The growth in water demand will continue due to increases in population, income, and changes in commercial and industrial activity. Water use efficiency will help stretch existing water supplies to meet these growing needs.

MWDOC demonstrated its commitment to water use efficiency in 1991 by voluntarily signing the Memorandum of Understanding (MOU) Regarding Urban Water Conservation in California (CUWCC). The California Urban Water Conservation Council was formed through adoption of this MOU and is considered the "keeper" of the 14 Best Management Practices (BMPs), with the authority to add, change, or remove BMPs. The CUWCC also monitors implementation of the MOU. As a signatory to the MOU, MWDOC has committed to a good-faith-effort to implement all cost-effective BMPs.

An ethic of efficient use of water has been developing over the last 19 years of implementing water use efficiency programs. Retail water agencies throughout Orange County also recognize the need to use existing water supplies efficiently – implementation of BMP-based efficiency programs makes good economic sense and reflects responsible stewardship of the region's water resources. All retail water agencies in Orange County are actively implementing BMP-based programs; however, not all retail water agencies are signatory to the MOU.

As a signatory to the CUWCC MOU regarding urban water use efficiency, MWDOC's commitment to implement BMP-based water use efficiency program continues today. To help facilitate implementation of BMPs throughout Orange County, as a wholesaler MWDOC's efforts focus on the following three areas that both comply with and go beyond the basic BMP No. 10 - Wholesaler Assistance requirements.

Regional Program Implementation - MWDOC develops, obtains funding for, and implements regional BMP programs on behalf of all retail water agencies in Orange County. This approach minimizes confusion to consumers by providing, county-wide, the same programs with the same participation guidelines, and also maintains a consistent message to the public to use water efficiently.

Local Program Assistance - When requested, MWDOC assists retail agencies to develop and implement local programs within their individual service areas. This assistance includes collaboration with each retail agency to design a program to fit that agency's local needs, which may include providing staffing, targeting customer classes, acquiring grant funding from a variety of sources, and implementing, marketing, reporting, and evaluating the program. MWDOC provides assistance with a variety of local programs including, but not limited to, Home Water Surveys, Large Landscape, Public Information, School Education, Conservation Pricing, and Water Waste Prohibitions. These local programs have also been structured through Integrated Regional Water Management Planning processes in north, central and south Orange County.

Research and Evaluation - An integral component of any water use efficiency program is the research and evaluation of potential and existing programs. Research allows an agency to measure the water savings benefits of a specific program and then compare those benefits to the costs of implementing the program in order to evaluate the economic feasibility of the program when compared to other efficiency projects or existing or potential sources of supply.

Table 4-1 summarizes BMP implementation responsibilities of MWDOC as Orange County's wholesale supplier and responsibilities of MWDOC's retail agencies.

Table 4-1: BMP Implementation Responsibility and Regional Programs in Orange County

BMP #	Efficiency Measure	Applies to:		MWDOC Regional Program
		Retailer	MWDOC as a Wholesaler	
1	Home Water Surveys	√		√
2	Residential Plumbing Fixture Retrofits	75% Saturation goal achieved in 2001		
3	System Water Audits, Leak Detection and Repair	√	(1)	√
4	Metering With Commodity Rates	√	(1)	
5	Large Landscape Conservation Programs	√		√
6	High-Efficiency Washing Machine Rebate Programs	√		√
7	Public Information Programs	√	√	√
8	School Education Programs	√	√	√
9	Commercial, Industrial, and Institutional Programs	√		√
10	Wholesale Agency Assistance Programs		√	√
11	Conservation Pricing	√	√	√
12	Conservation Coordinator	√	√	√
13	Water Waste Prohibition	√		√
14	Residential ULFT Replacement Programs	75% Saturation goal achieved in 2009		

(1) MWDOC does not own or operate a distribution system; water wholesaled by MWDOC is delivered through the Metropolitan distribution system and meters.

4.2. BMP Implementation in MWDOC Service Area

4.2.1. DMM 1: Water Survey Programs for Single-Family Residential and Multi-Family Residential Customers

MWDOC assists its retail water agencies to implement this BMP by making available the following programs aimed at increasing landscape water use efficiency for residential customers.

Smart Timer Rebate Program - In FY 2004/05, MWDOC launched its program aimed at providing a rebate incentive for the purchase and installation of 'weather based irrigation controller' or as MWDOC calls them 'Smart-Timers'. Under this regional program, residential and small commercial properties are eligible for a rebate when they purchase and install a weather-based irrigation controller which has the potential to save 41 gallons per day per residence and can reduce runoff and pollution by 49 percent. While the commercial rebate MWDOC provides has been adjusted over time, the residential rebate has remained steady at $60 per active valve. Commercial rebates evolved from $630 per irrigated area in the beginning to $25 per station currently. Because it was a new landscape water management device, MWDOC has included a device installation verification step. Mission Resource Conservation District (MRCD) is involved in the program, providing post installation verification and any necessary Smart-Timer scheduling corrections. They also evaluate the site's irrigation system, measure the irrigated area, measure water pressure, place repair flags, and providing important educational advice on efficiency improvements.

The rebate program was initially funded by a grant from the State Water Resources Control Board (SWRCB). Since the initial program start, additional funding partners include the Department of Water Resources, the United State Bureau of Reclamation, the Natural Resources Conservation Service, the Metropolitan Water District of Southern California, and the local retail water agencies of Orange County. Because of the funding developed, MWDOC has been able to provide incentives for the installation of just under 2,400 residential smart timers and over 3,400 commercial smart timers.

Rotating Nozzle Rebate Program – This rebate program is offered to both residential and commercial customers. Through this program, site owners will purchase and install rotary nozzles in existing irrigation systems. The rebate, issues to participants by a rebate administration contractor, covers the cost of the devices and installation. The rebates will not exceed either of these two expenses. Following the submittal of a rebate application, water bill, and original purchase receipt, MWDOC will direct a third party installation verification contractor to perform installation verifications on up to 100% of the sites that installed devices. Verifications will be across both residential and commercial properties. As a final step in the Program, a qualitative and quantitative evaluation will be conducted on those rotary nozzles installed where there is sufficient time to gather consumption data

for a 12-month post-installation period. Since the program start date in 2007, overall water savings to date are over 2,500 acre feet of water. There have been a total of 146,855 nozzle installed in the MWDOC service area. The Program is anticipated to conclude in December of 2012.

South County SmartScape: Landscape Improvement Incentive Program **-** MWDOC has obtained grant funding from the SWRCB to implement this Program. The purpose of the Program is to retrofit existing high water-using landscapes with 'fixes' that will reduce the site's outdoor water consumption in single-family homes and small commercial properties. Each site, within each of the Program's eligible areas, will receive a menu-option of retrofit improvements, labeled as "A," "AB," or "ABC," indicating which specific set of improvements may be implemented.

The three different retrofit improvement designations are summarized in Table 4-2:

Table 4-2: Retrofit Improvement Designations

Retrofit Type	Improvement Description
A	Replacement of an existing conventional "dumb" irrigation timer with a weather-based "smart timer" irrigation controller. REQUIRED STEP (limit of 1 per site)
B	Replacement with a weather-based controller ***and*** implementation of specific irrigation distribution system improvements (may include both front and back yards).
C	Replacement with a weather-based controller, ***and*** implementation of irrigation distribution system improvements, ***and*** replacement of high water using plants, specifically turf grass with a choice of certain water-efficient landscape improvements from a Program Plant List of California Friendly® and native species (plant replacement retrofits in front yards only).

All sites that choose to participate in this Program must receive Retrofit Type A. Depending on the outcome of a pre-installation landscape audit performed by a third party contractor employed by MWDOC, sites may become eligible for Retrofit Types A and B, and/or Types A, B, and C. Participating sites may not receive Type B or C without having a smart timer (Type A) installed.

The south Orange County retrofit area is defined as the combined service territories of the following retail water agencies (Agencies) in the South Orange County Integrated Regional Watershed Management Plan (SOCIRWMP) Area:

- El Toro Water District
- Laguna Beach County Water District
- Moulton Niguel Water District
- City of San Clemente

- City of San Juan Capistrano
- Santa Margarita Water District
- South Coast Water District
- Trabuco Canyon Water District

Turf Removal Program – This program is a partnership between MWDOC, Metropolitan, and local retail water agency. Through this program, residential and small commercial customers of participating retail water agencies are eligible to receive $1 per square foot of turf removed for qualifying projects. The project estimated rebate funding for residential sites is $76,582 while for commercial sites rebate funding is estimated at $178,692. The goals of this program are to increase water use efficiency within Orange County, reduce runoff leaving the properties, and evaluate the effectiveness of water-saving practices.

The customer completes the program application and returns it to MWDOC for review and to determine whether the site will be approved or denied. Once the application is approved, the customer will be contacted within two weeks to schedule the mandatory pre-inspection. Once the customer's pre-inspection is complete, the results will be forwarded to the program staff. If the site qualifies, a follow-up letter and authorization to proceed will be mailed/emailed out within a few days. Upon receipt of this authorization to proceed, the customer may begin the turf removal project. The customer will have 60 days to complete the work. Once all work is complete, the customer contacts the Program Administrator to indicate that the work is completed and to schedule the mandatory post-inspection. After the final, mandatory site visit and verification of the amount of turf removed, the rebate check will be issued and mailed. All work performed in association with this Program must be completed by March 31, 2011.

California Friendly Landscape Training (Residential) - The California Friendly Landscape Training provides education to residential homeowners, property managers, and professional landscape contractors on a variety of landscape water efficiency practices they can employ. These classes are hosted by MWDOC and/or the retail agencies to encourage participation across the county. The residential training program consists of either a half-day Mini Class or individual, topic-specific, four-hour classes. The four topics presented include: 1) Basic Landscape Design, 2) California Friendly Plants, 3) Efficiency Irrigation Systems, and 4) Soils, Watering, Fertilizing.

These classes are now available on-line allowing Orange County residents to learn while sitting in the comfort of their own home.

Table 4-3: California Friendly Landscape Training Program Residential Participation Summary

	FY 2005-06	FY 2006-07	FY 2007-08	FY 2008-09	Total
Number of Participants	296	233	207	304	1040

4.2.2. DMM 2: Residential Plumbing Retrofit

Using the 2001 *Orange County Saturation Study* as a benchmark, saturation of low-flow showerheads was measured at 67% and 60% in single- and multi-family housing stock respectively. Today, low-flow showerhead saturation is estimated to be more than 90% in single- and multi-family homes. As a result, water agencies throughout Orange County have achieved the 75% saturation requirement for this BMP. No further low-flow showerhead distribution or installation activity has occurred.

4.2.3. DMM 3: System Water Audits, Leak Detection and Repair

With the sale of the Allen-McColloch Pipeline to Metropolitan in 1995, MWDOC no longer owns or operates a distribution system. Water purchased and sold by MWDOC is distributed through Metropolitan's system to the MWDOC retail agencies. As a result, implementation of BMP No. 3 is not applicable to MWDOC.

However, in an effort to assist its retail agencies, MWDOC publishes annually the *Orange County Water Agencies Water Rates, Water System Operations, and Financial Information* survey. This survey facilitates a pre-screening survey that estimates the volume and percent of unaccounted-for-water for each retail water agency in the county. In 2009, the percent of unaccounted-for-water for retail water agencies ranged from a low of 1.5% to a high of 7.5%, with an average of 3.8%

In addition to the survey, MWDOC was awarded a grant to implement a study titled "Water Loss Management Program Assessment: Potable Water System Audits." This study used the American Water Works Association and International Water Association Water Audit Methodology. The following retail water agencies participated in the study: City of Brea, City of Huntington Beach, Laguna Beach County Water District, Moulton Niguel Water District and City of Tustin.

The purpose of the study was to:

- Educate the agencies on the most current water loss control methods and technologies
- Performa system water audits for each agency to determine current water losses and areas for improvement

- Review each agency's leakage management program and recommend improvements
- Assist the agencies in achieving the California Urban Water Conservation Council Best Management Practice 1.2 compliance

Non-Revenue water ranged from 3 to 10 percent of volume of water supplied, which is very good and will within the range of efficient water utilities concerned about conservation and water loss management practices.

4.2.4. DMM 4: Metering with Commodity Rates

Metering with commodity rates by wholesale and retail agencies has been an industry standard throughout Orange County for many years. All customers are metered and billed based on commodity rates either monthly or bi-monthly.

4.2.5. DMM 5: Large Landscape Conservation Programs and Incentives

MWDOC offers several landscape water use efficiency program aimed at both residential and commercial customers as described under DMM 1. MWDOC also offers programs in Orange County to specifically assist retail agencies and their large landscape customers to use water efficiently as follows:

Water Smart Landscape Program - MWDOC has created a unique and innovative partnership linking landscape water management, green material management, and the non-point source pollution prevention goals of separate agencies into one program -- the Water Smart Landscape Program. This partnership includes MWDOC as lead agency, Metropolitan, Orange County Integrated Waste Management Department, U.S. Bureau of Reclamation, and all retail water agencies in Orange County. The Landscape Performance Certification Program is designed to do the following:

- Assist water agencies in meeting the landscape irrigation management requirements of the CUWCC's BMP #5;
- Assist cities and the County in meeting Integrated Waste Management Act goals (AB 979) to reduce the volume of waste and to recycle organic materials for the benefit of the landscape; and
- Assist cities and the County in identifying landscape run-off sites and providing site-by-site remedies.

Homeowner associations (HOAs) managing dedicated landscape irrigation meters are the primary target audience for participation in this program; however, city and school district landscapes also participate. There are more than 17,000 dedicated irrigation meters served by retail water agencies in Orange County, of which nearly 14,000 use potable water, while the remaining 3,000 use reclaimed water to irrigate urban landscapes. Table 4-4 identifies the total number of activated meters and associated AFY

water savings in the MWDOC service area. Water savings is based on the results of the "Evaluation of the Landscape Performance Certification Program" which include a 765 gallon per day savings rate.

Usually, three different parties are involved in managing landscapes associated with these meters: 1) the property owner (HOA board of directors), 2) the property manager, and 3) the landscape contractor. This program creates a "Loop of Accountability" by providing regular (monthly or bi-monthly) irrigation performance reports to all three parties via the program website, www.waterbudgets.com. Participants are sent an e-mail informing them that their Irrigation Performance Report has been updated and requesting that they log-on to the program website to view their latest reports.

Table 4-4: Landscape Performance Certification Program in MWDOC's Service Area

	Activated Meters	AFY of Water Savings
2001	629	539
2002	900	771
2003	1,489	1,277
2004	1,278	1,095
2005	1,925	1,650
2006	1,785	1,530
2007	1,969	1,687
2008	2,733	2,342
2009	4,395	3,766
2010	10,173	8,717
Total	**27,276**	**23,374**

***California Friendly Landscape Training (Professional)* -** The California Friendly Landscape Training provides education to residential homeowners, professional landscape contractors, property managers and HOA Board Members on a variety of landscape water efficiency practices they can employ. These classes are hosted by MWDOC and/or the retail agencies to encourage participation across the county. The Professional Training Program course consists of four consecutive classes in landscape water management, each building upon principles presented in the preceding class. Each participant receives a bound handbook containing educational materials for each class. These classes are offered throughout the year and taught in both English and Spanish languages. The following is a synopsis of each class in the course:

- **Irrigation Principles:** Topics include irrigation system types, sprinkler layouts, sprinkler components, sprinkler selection and spacing, and common sprinkler problems.
- **Irrigation System Troubleshooting:** This session focuses on an analytical approach to solving irrigation system failures. Three potential

problem areas are examined: (1) mechanical problems, 2) hydraulic problems, and 3) electrical problems. Workshop participants receive practical training in the use of electrical troubleshooting equipment.

- **Controller Programming:** A hands-on workshop where participants learn basic controller features by programming sample cases. Participants then move into advanced controller features as they input more complex schedules, taking into consideration temperature/seasonal changes, rain, landscape activities, and demands that limit irrigation times. Irrigation controllers are provided for in-class use.
- **Irrigation Scheduling:** This session focuses on two critical questions: 1) When to irrigate? 2) How much water to apply? A variety of field techniques and methods are presented, along with the technical aspects to be considered when scheduling irrigation run times. Each class participant is furnished with the tools needed to perform an irrigation scheduling assignment.

Upon completion of the course, participants receive a certificate listing all classes completed. Participants are eligible for 21 Continuing Education Units as certified by the Irrigation Association. Table 4-5 summarizes commercial participation in this program.

Table 4-5: California Friendly Landscape Training Program Commercial Participation Summary

	FY 2005-06	FY 2006-07	FY 2007-08	FY 2008-09	Total
Number of English Participants	63	31	53	38	**185**
Number of Spanish Participants	63	49	11	54	**177**

These classes are now available on-line to all residents in Orange County. These classes allow significantly more flexibility on how residents view the classes. Unfortunately, we do not have the ability to track the number of classes taken on-line at this time.

4.2.6. DMM 6: High-Efficiency Washing Machine Rebate Programs

MWDOC participates in the SoCal Water Smart residential rebate program offered by Metropolitan. This program offers financial incentives to single-family and multifamily residential customers through the form of a rebate.

Orange County residents are eligible to receive an $85 rebate when they purchase a new High Efficiency Clothes Washer (HECW). This program began in 2001 and is sponsored

by MWDOC, Metropolitan, and local retail water agencies. Rebates are available on a first-come, first-served basis, while funds last. Participants must be willing to allow an inspection of the installed machine for verification of program compliance. Machines must have a water factor of 4.0 or less. Depending on use, these machines can save 10,000 gallons of water per year. Participants are encouraged to contact their local gas and/or electric utility as additional rebates may be available. As of FY 2010-11, more than 68,379 HECWs have been installed in single and multi-family homes through this program. These retrofits are saving 1,900 acre feet of potable water each year.

4.2.7. DMM 7: Public Information Programs

MWDOC currently offers a wide range of public information programs in Orange County. Each program targets different water customer segments. For example, the O.C. Water Hero Program aims to encourage school children to use water wisely; MWDOC's electronic newsletter "ecurrents" is designed to keep residents and businesses, stakeholder groups, opinion leaders, and others apprised of MWDOC news and programs. MWDOC's current public information programs are described below.

Water Facility Inspection Trip Program - The inspection trip program is sponsored by MWDOC and Metropolitan. Each year, Orange County elected officials, residents, business owners, and community leaders are invited to attend educational inspection trips to tour key water facilities throughout the state of California. The goal is to educate members of our community about planning, procurement and management of southern California's water supply and the issues surrounding delivery and management of this vital resource. The inspection trips are specifically designed to address various water issues affecting the state, including water supply, delivery, treatment, sustainability, the environment, and water policy. All trips are hosted by a MWDOC/Metropolitan Director.

O.C. Water Hero Program - The O.C. Water Hero Program encourages Orange County's youngest water users to use water wisely and protect our water resources. The goal of this program is to engage children in water use efficiency activities while facilitating discussion with friends and family members about how to save water. Any Orange County child can become a Water Hero by pledging to save 20 gallons of water per day. In exchange for their pledge, they receive a free Water Hero kit, which includes a variety of fun, water-saving items like a 5-minute shower timer and "fix-it" ticket pad for busting water wasters. Water Heroes can then take their water-saving skills to the next level by becoming Water Superheroes. To become a Superhero, a student must get their parents to also pledge to save 20 gallons of water per day. All Superheroes receive a second free kit filled with items like a Superhero t-shirt and keychain. To date, more than 13,000 children in Orange County have become Water Heroes and more than 4,000 have become Superheroes.

eCurrents - *eCurrents* is the monthly electronic newsletter of the MWDOC. It is designed to keep MWDOC's 28 member agencies, residents and businesses, stakeholder groups, opinion leaders, and others apprised of MWDOC news, programs, events, and activities. The publication also serves to keep readers informed about regional, state, and federal issues affecting water supply, water management, water quality, and water policy and regulation.

Water Advisory Committee of Orange County (WACO) - WACO was formed in 1983 to facilitate the introduction, discussion, and debate of current and emerging water issues among Orange County policymakers and water professionals. It has also advocated the Orange County water community's position on issues affecting the provision and management of our water supplies with lawmakers, regulatory agencies, regional and state water organizations, and others.

The committee's membership has evolved during the past quarter century to include elected officials and management staff from Orange County cities and water districts, engineers, attorneys, consultants, and other industry professionals. The meetings are also attended from time-to-time by Orange County residents and community group members who share a common interest in water issues.

Monthly meetings are open to the public and are typically held on the first Friday of each month at 7:30 a.m. The meetings take place at the Fountain Valley headquarters of MWDOC and OCWD. The meetings are designed to provide attendees with an opportunity for professional networking and to receive informative presentations from water industry professionals, academics, economists, engineers, political officials, and industry experts about key water issues affecting Orange County.

4.2.8. DMM 8: School Education Programs

School water education has been part of MWDOC's activities for more than 30 years. It is MWDOC's goal to educate children about local water issues and help them understand the value of water and how they can protect our water resources and the environment. MWDOC's on-going school education programs are described below.

Water Education School Program - One of the most successful and well-recognized water education curriculums in southern California is MWDOC's Water Education School Program. For more than 30 years, School Program mascot "Ricki the Rambunctious Raindrop" has been educating students in grades K-5 about the water cycle, the importance and value of water, and the personal responsibility we all have as environmental stewards.

The School Program features assembly-style presentations that are grade-specific and performed on-site at the schools. The program curriculum is aligned with the science

content standards established by the State of California. Since its inception in 1973, nearly three million Orange County students have been educated through the School Program.

In 2004, MWDOC formed an exciting partnership with Discovery Science Center that has allowed both organizations to reach more Orange County students each year and provide them with even greater educational experiences in the areas of water and science. Discovery Science Center currently serves as the School Program administrator, handling all of the program marketing, bookings, and program implementation. During the 2010-11 school year, more than 70,000 students will be educated through the program.

Water Education Poster & Slogan Contest - Each year, MWDOC holds a Water Education Poster and Slogan Contest to increase water awareness. To participate, children in grades K-6 develop posters and slogans that reflect a water awareness message. The goal is to get children thinking about how they can use water wisely and to facilitate discussion about water between children and their friend, parents, and teachers. Each year, more than 1,500 poster and slogan entries are received through the contest.

During a special judging event, approximately 16 posters and 10 slogans are selected as the winners. All of our winners – and their parents, teachers, and principals – are invited to attend a special awards ceremony with Ricki the Raindrop at Discovery Science Center. At the awards ceremony, the winners are presented with their framed artwork as well as a custom t-shirt featuring their poster or slogan, a trophy, a certificate, and other fun water-saving prizes.

Children's Water Education Festival - The largest water education festival of its kind is the annual Children's Water Education Festival (Festival). The Festival is presented by OCWD, the National Water Research Institute, Disneyland Resort, and MWDOC. Each year, more than 5,000 students participate in the Festival over the course of this two-day event. The Festival is currently held at the Richard Nixon Library and Birthplace in Yorba Linda, California.

The Festival presents a unique opportunity to educate students in grades four through six about local water issues and help them understand how they can protect our water resources and the environment. Students attend the Festival with their teacher and classmates, visiting a variety of booths focused on different water-related topics throughout the day. Participating organizations (presenters) engage the students through interactive educational presentations that are aligned with the science content standards established by the State of California. Since its inception, more than 80,000 children from schools throughout Orange County have experienced the Festival and all it has to offer.

4.2.9. DMM 9: Conservation Programs for Commercial, Industrial and Institutional Accounts

MWDOC offers financial incentives under the Save Water Save A Buck Rebate Program which offers rebates for various water efficient devices to Commercial, Industrial and Institutional (CII) customers. MWDOC also administers the Water Smart Hotel Program and Industrial Process Water Use Reduction Program as described below.

Save Water Save a Buck – This program began in 2002 and offers rebates to assist CII customers in replacing high-flow plumbing fixtures with low-flow fixtures. Facilities where low-flow devices are installed must be located in Orange County. Rebates are available only on those devices listed in Table 4-6 below and must replace higher water use devices. Installation of devices is the responsibility of each participant. Participants may purchase and install as many of the water saving devices as is applicable to their site.

Table 4-6: Retrofit Devices and Rebate Amounts Available Under Save Water Save a Buck Program

Retrofit Device	Rebate Amount
High Efficiency Toilet	$50
Ultra-Low-Water or Zero Water Urinal	$200
Connectionless Food Steamers	$485 per compartment
Air-Cooled Ice Machines (Tier III)	$300
Cooling Tower Conductivity Controller	$625
pH / Conductivity Controller	$1,750
Dry Vacuum Pumps	$125 per HP
Water Pressurized Broom	$110

As of FY 2010/11, CII customers within MWDOC service area have installed a total of 36,568 water-saving fixtures representing a water savings of 16,789 acre-feet.

Water Smart Hotel Program – In 2008 and 2009, MWDOC received grants from DWR and the US Bureau of Reclamation to conduct the Water Smart Hotel Program, a program designed to provide Orange County hotels and motels with commercial and landscape water saving surveys, incentives for retrofits and customer follow-up and support. The goal of the program is to implement water use efficiency changes in hotels to achieve an anticipated water savings of 7,078 acre feet over 10 years.

The Program is offered to hotels in MWDOC's service area as identified by retail water agencies. It is anticipated that detailed survey of the indoor and outdoor water using aspects of up to 105 participating hotels will be performed. Participating hotels will receive survey reports that recommend indoor and outdoor retrofits, upgrades, and other changes that should, based on the survey, result in significant water savings. Quantities of each device and associated fixture and installation costs, water savings and payback information (based on rebate amount Incentives offered through the Save Water Save A Buck Rebate Program will be augmented using DWR and USBR Water Use Efficiency grant funds to bridge the gap between existing incentives and the actual costs of Hotel Water Survey recommendations. To date, over 24 surveys have been performed county-wide, and over 9,500 water-saving devices have been installed through the program. These devices are saving 351 acre feet per year or 3,510 acre feet over the ten year device life.

Industrial Process Water Use Reduction Program - The IPWURP provides engineering surveys to identify water saving process improvements in the Orange County industrial customer base. Additionally it provides Engineering Assistance and Financial incentives to help implement the recommendations from those surveys. This is done with funding from DWR, USBR, Metropolitan and MWDOC. To date the program has identified a water savings potential of 450 million gallons per year. The program water savings goal is 80 million gallons per year or 245 acre feet per year.

Focused on industrial process water only, the program targets, but is not limited to, the highest water use customers in the following sectors Textile, Metals, Electronics, Laundries, Food Processing, and Pharmaceuticals. The program offers two levels of surveys:

- A preliminary Focused Survey to ascertain the magnitude of water savings possible.
- A Comprehensive Survey which is a more detailed study of the customer's process and includes customized retrofit recommendations, estimated costs, savings in water and sewer discharge, and a simple ROI

Incentives are calculated via a "Pay for Performance" model based on water savings (monitored for 1 year). Qualified participants will receive the lesser of:

- $4.37 per 1,000 gallons of water saved, or
- Fifty (50) percent of the total amount of retrofit cost

The incentives are paid in two payments:

- The first payment after verification of equipment installation and startup
- The second payment after a one-year monitoring period to measure water savings

Types of projects have included treating and reusing water in manufacturing process or for cooling towers and new wash equipment with upgraded washers, nozzles and automated control systems.

4.2.10. DMM 10: Wholesale Agency Programs

MWDOC provides financial incentives, conservation-related technical support, and regional implementation of a variety of BMP-based programs. In addition, MWDOC conducts research projects to evaluate implementation of both existing programs and new pilot programs.

4.2.11. DMM 11: Conservation Pricing

MWDOC publishes annually the *Orange County Water Agencies Water Rates, Water System Operations, and Financial Information* survey. This survey documents the rates charged by each retail water agency, as well as the type of rate structure, i.e., a flat rate, inclined block, or seasonal rate structure. Table 4-7 provides a brief summary of the types of rates used by retail water agencies in Orange County and shows a slow progression away from uniform rates.

Table 4-7: Summary of Rate Structure Types Used in Orange County

To be completed

Types of Rate Structure	Number of Agencies Utilizing Different Rate Structure Types					
	1991	2005	2006	2007	2008	2009
Declining Block	0					
Uniform or Flat	22					
Inclined Block	13					
Seasonal Inclined Block	1					

MWDOC Budget Based Tiered Rate Study Grant with DWR - The purpose of the study is to concurrently assist 13 retail water agencies in examining the feasibility, approach and implementation of water budget rate structures or various aspects of water budget rate structures. The goal is to help urban communities cope with water shortages and drought conditions while at the same time provide the benefits of *achieving* water savings every year. Equitable allocation of indoor and outdoor water needs by account allows agencies to scientifically determine which accounts are over their allotment. Based on this information, a water agency can focus their resources on saving water from these accounts based on price and/or other complementary device based conservation programs. The flexibility of water budgets in this manner makes them the most equitable mechanism for water conservation.

Water budgets can alleviate the adverse effects of drought conditions with two primary mechanisms. First, it can reduce water *consumption* by sending a price signal specifically to those customers who are the least efficient with their water use. Further, water budgets address equity or fairness, by allocating water based on demographic and geographic factors such as household size, landscaped area, and plant type and weather

conditions. Documented water savings on the order of 20% and higher have been achieved via implementation of these types of rate structures.

Some of the challenges agencies face when evaluating and implementing a water budget are determining staff and billing system requirements, designing defensible water budget allocations based on scientific data, gathering public support and setting realistic conservation goals. These challenges are often compounded by lack of technical expertise and policy inexperience. This project proposes to assist the agencies in overcoming these types of obstacles.

Group workshops are held with all participating agencies and then each agency will conduct additional detailed work related to the policy and technical issues associated with water budgets in their service area. As the efforts progress, meetings within each agency are held with the appropriate policy-makers and senior staff to refine the implementation aspects. For some agencies, a billing system compatibility analysis will be conducted to determine if the existing billing system can handle budget based tiered rates and/or if changes or modifications are needed. Lastly, by channeling the energy of 13 neighboring communities to examine water budgets, it creates the political environment required for them to be adopted and increase the likelihood of success.

The Grant Study includes three specific phases, although not every agency participates in every phase. The phases are:

- Phase 1: Water Rate Development
- Phase 2: Use of Parcel Data for Water Budget Development
- Phase 3: Billing and Accounting System Needs (hardware and software)

For the Phase 2 work, MWDOC utilized the services of Digital Map Products to develop estimates of irrigable area for all parcels within the participating agencies using available infrared imagery from the State and overlaying it on the parcel maps in Orange County. This information is critical to the development of the irrigation water budget portion for each customer and provides the retail agencies with information that is not currently available. This information is then plugged into the modeling software to develop and test options for the rate structure tier width and make up. Even if the irrigation budgets are not incorporated directly into the billing systems, they can be integrated into the billing software to provide a comparison of actual water use compared to budgeted water use. This information is critical to identification of non-efficient water users for implementation of customer interventions.

The Grant Study also outlines the financial and political aspects of water budgets and positions the retail agencies to implement water budgets for equitable allocation of water under a continuing rationing scenario.

It is expected that at least 4 of the retail agencies will move all the way into the implementation phase with the other agencies moving closer to a state of readiness to implement various facets of budget based tiered rates or the ability to monitor and report on the efficiency of water use by existing customers via development of water budgets for their customers.

Other benefits of implementation of budget based tiered rates include:

- Provides a direct feedback mechanism at every billing cycle to measure how residents are doing compared to a scientifically based budget estimate.
- Based on the feedback mechanism, it allows agency customer service representatives to easily target high water users for education and intervention measures.
- Provides equity in that customers are measured against a scientific norm as compared to requests to "cutback, reduce or conserve additional water". Water conserving customers are rewarded by remaining within the budgets while non-water conscious customers are "penalized" through higher pricing tiers to let them know they are wasting a precious resource.
- Provides a tool and mechanism that can be used to manage water resources both during "drought" situations and on an on-going basis to result in permanent water using changes among the customers of the water agency.
- Provides a mechanism to flag problems with irrigation system or water system components that may need repair or adjustments that might otherwise go unseen.
- Provides environmental benefits by reducing water consumption and irrigation application to an appropriate level thus reducing water runoff and the transport of sediments and contaminants into waterways, streams and the ocean.
- Certain water budget rate structures are known to improve revenue instability, a financial concern when designing conservation rate structures.
- Produces a reduction in peak demand, which provides financial saving in future capital improvement cost

The participating agencies are listed below in Table 4-8:

Table 4-8: List of Participating Agencies

MWDOC Agencies Participating in Various Phases of Budget Based Tiered Water Rates Grant			
Participant	Phase 1 Rate Structure	Phase 2 Digital Mapping	Phase 3 IT Hardware Software
1. Garden Grove		YES	
2. Buena Park	YES		
3. Yorba Linda WD	YES		YES
4. South Coast WD	YES	YES	
5. El Toro WD	YES	YES	YES
6. Huntington Beach	YES		YES
7. Moulton Niguel	YES	YES	YES
8. SMWD		YES	
9. Newport Beach	YES		YES
10.San Juan Capistrano		YES	
11.East Orange County WD	YES	YES	YES
12.Mesa Consolidated WD		YES	
13.Fountain Valley	YES		
Total participants in each phase	9	8	6

4.2.12. DMM 12: Water Conservation Coordinator

All retail water agencies in Orange County have designated water conservation coordinators, regardless of signatory status to the MOU. The Municipal Water District of Orange County currently employs a staff of nearly six to develop, implement and evaluate a comprehensive water use efficiency program on behalf of its retail agencies. All retail water agencies in Orange County are actively implementing BMPs in their service areas.

4.2.13. DMM 13: Water Waste Prohibition

Due to our water supply situation, in 2009 Metropolitan and MWDOC partnered to develop a water waste prohibition template for adoption by retail water agencies.

4.2.14. DMM 14: Residential Ultra-Low-Flush Toilet Replacement Programs

Over the past 19 years, MWDOC has continuously implemented a regional ULFT Rebate and/or Distribution Program targeting single- and multi-family homes in Orange County. Since the end of distribution program in 2004, MWDOC's program has focused solely on providing rebate incentives for retrofitting non-efficient devices with either ULFTs or

High Efficiency Toilets (HETS) – toilets using 1.28 gallons per flush or less. The ULFT portion of this program concluded in June 2009, and over 360,000 ULFTs were replaced in single family and multi-family homes, with an overall program to date savings of approximately 138,457 acre feet of water. The HET rebate program, which concluded in 2010, has incentivized over 26,601 devices, with an overall program to date savings of approximately 3,416. Saturation of ULFTs (and HETs) is currently estimated to be more than 90% in single-family homes and 80% in multi-family homes.

5. Water Shortage Contingency Plan

5.1. Overview

Recent water supply challenges throughout the American Southwest and the State of California have resulted in the development of a number of policy actions that water agencies would implement in the event of a water shortage. In southern California, the development of such policies has occurred at both the wholesale and retail level. This section describes how new and existing policies that Metropolitan and MWDOC have in place to respond to water supply shortages, including a catastrophic interruption and up to a 50 percent reduction in water supply.

5.2. Shortage Actions

MWDOC is a wholesale water agency, and while it has broad powers to allocate or prohibit uses of water upon the declaration of a Water Shortage Emergency by its Board, MWDOC has not acted to directly mandate how water is used by its member (retail) water agencies in the past. However, MWDOC is responsible for how imported water will be allocated to each member agency, which will then determine specific stages of shortage actions in accordance with local ordinances. Thus, during past shortages, MWDOC has adopted Board Resolutions urging its retail agencies to develop and implement water shortage plans, calling upon each agency to adopt and enforce regulations prohibiting the waste of water, and implementing an allocation plan for available imported water consistent with reductions, incentives, and penalties imposed on MWDOC by Metropolitan.

5.2.1. Metropolitan's Water Supply Allocation Plan

As an importer of water from multiple sources, including both the Colorado River and Sierra Nevada, a number of water supply challenges have impacted the reliability of Metropolitan's imported supplies. In response to these challenges, Metropolitan has implemented existing policies as well as developed new ones.

The first action that Metropolitan implements in the event of a water shortage is the suspension and/or reduction of its interruptible supplies, which are supplies sold at a discount in return for the buyers agreeing to be the first to be cutback in the event of a shortage. Metropolitan currently has two interruptible programs for agricultural users and groundwater replenishment, under which supplies were either suspended or reduced in 2007.

In addition, in preparation for the possibility of being unable to the meet "firm demands" (non-interruptible supplies) of its member agencies, in February 2008, the Metropolitan's

Board of Directors (Board) adopted the Water Supply Allocation Plan (WSAP), which was subsequently updated in June 2009.

Metropolitan's WSAP includes the specific formula for calculating member agency supply allocations and the key implementation elements needed for administering an allocation. Metropolitan's WSAP is the foundation for the urban water shortage contingency analysis required under Water Code Section 10632 and is part of Metropolitan's 2010 RUWMP.

Metropolitan's WSAP was developed in consideration of the principles and guidelines described in Metropolitan's 1999 Water Surplus and Drought Management Plan (WSDM), with the objective of creating an equitable needs-based allocation. The plan's formula seeks to balance the impacts of a shortage at the retail level while maintaining equity on the wholesale level for shortages of Metropolitan supplies of up to 50 percent. The formula takes into account the following: impact on retail customers and the economy; growth and population; changes in supply conditions; investments in local resources; demand hardening aspects of non-potable recycled water use; implementation of conservation savings program; participation in Metropolitan's interruptible programs; and investments in facilities.

The formula is calculated in three steps: based period calculations, allocation year calculations, and supply allocation calculations. The first two steps involve standard computations, while the third section contains specific methodology developed for the WSAP.

Step 1: Base Period Calculations – The first step in calculating a water supply allocation is to estimate water supply and demand using a historical based period with established water supply and delivery data. The base period for each of the different categories of demand and supply is calculated using data from the three most recent non-shortage years, 2004-2006.

Step 2: Allocation Year Calculations – The next step in calculating the water supply allocation is estimating water needs in the allocation year. This is done by adjusting the base period estimates of retail demand for population or economic growth and changes in local supplies.

Step 3: Supply Allocation Calculations – The final step is calculating the water supply allocation for each member agency based on the allocation year water needs identified in Step 2. Each element and its application in the allocation formula are discussed in detail in Metropolitan's WSAP.

In order to implement the WSAP, the Metropolitan Board makes a determination on the level of the regional shortage, based on specific criteria, in April each year. If it is

determined allocations are necessary, they go into effect in July for that year and remain for a 12-month period, although the schedule is at the discretion of Metropolitan's Board.

Metropolitan's 2010 RUWMP forecasts that Metropolitan will be able to meet projected firm demands throughout the forecast period from 2015 to 2035. However, these projections do not mean that Metropolitan would not implement its WSAP during this period.

5.2.2. MWDOC's Water Supply Allocation Plan

To prepare for the potential allocation of imported water supplies from Metropolitan, MWDOC worked collaboratively with its 28 member agencies to develop its own Water Supply Allocation Plan (MWDOC WSAP), adopted January 2009, to allocate imported water supplies at the retail level. The MWDOC WSAP lays out the essential components of how MWDOC will determine and implement each member agency's allocation during a time of shortage.

The MWDOC WSAP uses a similar method and approach, when reasonable, to that of the Metropolitan's WSAP. However, MWDOC's plan remains flexible to use an alternative approach when Metropolitan's method produces a significant unintended result for the MWDOC member agencies. The MWDOC WSAP model follows five basic steps to determine a retail agency's imported supply allocation.

Step 1: Determine Baseline Information – The first step in calculating a water supply allocation is to estimate water supply and demand using a historical based period with established water supply and delivery data. The base period for each of the different categories of demand and supply is calculated using data from the last three non-shortage years – calendar years, 2004, 2005, and 2006.

Step 2: Establish Allocation Year Information – In this step, the model adjusts for each member agency's water need in the allocation year. This is done by adjusting the base period estimates for increased retail water demand based on growth and changes in local supplies.

Step 3: Calculate Initial Minimum Allocation Based on Metropolitan's Declared Shortage Level – This step sets the initial water supply allocation for each retail agency. After a regional shortage level is established, MWDOC will calculate the initial allocation as a percentage of adjusted Base Period Imported water needs within the model for each member agency.

Step 4: Apply Allocation Adjustments and Credits in the Areas of Retail Impacts, Conservation, and the Interim Agriculture Water Program – In this step, the model assigns additional water to address disparate impacts at the retail level caused by an across-the-board cut of imported supplies. It also applies a conservation credit given to those agencies that have achieved additional water savings at the retail level as a result of successful implementation of water conservation devices, programs and rate structures.

Step 5: Sum Total Allocations and Determine Retail Reliability – This is the final step in calculating a retail agency's total allocation for imported supplies. The model sums an agency's total imported allocation with all of the adjustments and credits and then calculates each agency's retail reliability compared to its Allocation Year Retail Demand.

The MWDOC WSAP includes additional measures for plan implementation, including the following:

- Appeal Process – An appeals process to provide member agencies the opportunity to request a change to their allocation based on new or corrected information. MWDOC anticipates that under most circumstances, a member agency's appeal will be the basis for an appeal to Metropolitan by MWDOC.
- Melded Penalty Rate Structure – At the end of the allocation year, MWDOC would only charge a penalty to each member agency that exceeded their allocation if MWDOC exceeds its total allocation and is required to pay a penalty to Metropolitan. Metropolitan enforces allocations to member agencies through a tiered penalty rate structure: penalty rates to a member agency that exceeds its total annual allocation at the end of the twelve-month allocation period, according to a specified rate structure. MWDOC's penalty would be assessed according to the member agency's prorated share (acre-feet over usage) of MWDOC penalty amount with Metropolitan. Penalty funds collected by Metropolitan will be invested in water conservation and local resource development.
- Tracking and Reporting Water Usage – MWDOC will provide each member agency with water use monthly reports that will compare each member agency's current cumulative retail usage to their allocation baseline. MWDOC will also provide quarterly reports on it cumulative retail usage versus its allocation baseline.
- Timeline and Option to Revisit the Plan – The allocation period will cover 12 consecutive months and the Regional Shortage Level will be set for the entire allocation period. MWDOC only anticipates calling for allocation when Metropolitan declares a shortage; and no later than 30 days from Metropolitan's declaration will MWDOC announce allocation to its member agencies.

Due to the complexity of calculating allocations and the potential for unforeseen circumstances that may occur during an allocation year, after one year of implementation,

MWDOC staff and member agencies have the opportunity to make recommendations to the MWDOC Board that will improve the method, calculation, and approach of the MWDOC WSAP.

5.3. Three-Year Minimum Water Supply

As a matter of practice, Metropolitan does not provide annual estimates of the minimum supplies available to its member agencies. As such, Metropolitan member agencies must develop their own estimates for the purposes of meeting the requirements of the Act.

Section 135 of the Metropolitan Water District Act declares that a member agency has the right to invoke its "preferential right" to water, which grants each member agency a preferential right to purchase a percentage of Metropolitan's available supplies based on specified, cumulative financial contributions to Metropolitan. Each year, Metropolitan calculates and distributes each member agency's percentage of preferential rights. However, since Metropolitan's creation in 1927, no member agency has ever invoked these rights as a means of acquiring limited supplies from Metropolitan.

As an alternative to preferential rights, Metropolitan adopted the Water Shortage Allocation Plan (WSAP) in February 2008. Under the WSAP, member agencies are allowed to purchase specified level of supplies without the imposition of penalty rates. The WSAP uses a combination of estimated total retail demands and historical local supply production within the member agency service area to estimate the firm demands on Metropolitan from each member agency in a given year. Based on a number of factors, including storage and supply conditions, Metropolitan then determines whether it has the ability to meet these firm demands or will need to allocate its limited supplies among its member agencies. Thus, implicit in Metropolitan's decision not to implement an allocation of its supplies is that at a minimum Metropolitan will be able to meet the firm demands identified for each of the member agencies.

In order to estimate the minimum available supplies from Metropolitan for the period 2011-2013, an analysis was performed to assess the likelihood that Metropolitan would re-implement mandatory water use restrictions in the event of a 1990-92 hydrology over this period. Specific water management actions during times of water shortage are governed by Metropolitan's Water Shortage and Drought Management Plan (WSDM Plan). Adopted by the Metropolitan Board in 1999, the WSDM Plan provides a general framework for potential storage actions during shortages, but recognizes that storage withdrawals are not isolated actions but part of a set of resource management actions along with water transfers and conservation. As such, there are no specific criteria for which water management actions to take at specific levels of storage. The implementation of mandatory restrictions is solely at the discretion of the Metropolitan Board and there are no set criteria that require the Board to implement restrictions. Given

these conditions, the analysis relies upon a review of recent water operations and transactions that Metropolitan has implemented during recent drought.

The first step in the analysis was a review of projected SWP allocations to Metropolitan, based on historical hydrologies. As with the recent drought, potential impacts to SWP supplies from further drought and the recently implemented biological opinions are anticipated to be among the biggest challenges facing Metropolitan in the coming three years.

A review of projected SWP allocations from the DWR's State Water Project Delivery Reliability Report 2009 (2009 SWP Reliability Report) was made to estimate a range of conservative supply assumptions regarding the availability of SWP supplies. The 2009 SWP Reliability Report provides estimates of the current (2009) and future (2029) SWP delivery reliability and incorporates regulatory requirements for SWP and CVP operations in accordance with USFWS and NMFS biological opinions. Estimates of future reliability also reflect potential impacts of climate change and sea level rise.

The analysis assumes a maximum SWP allocation available to Metropolitan of 2,011,500 AF and a Metropolitan storage level of 1,700,000 AF at 2010 year-end. The analysis also assumes a stable water supply from the Colorado River in the amount of 1,150,000 AF through 2015. Although the Colorado River watershed has also experienced drought in recent years, Metropolitan has implemented a number of supply programs that should ensure that supplies from this source are relatively steady for the next three years. Based on estimated "firm" demands on Metropolitan of 2.12 MAF, the annual surplus or deficit was calculated for each year of the three-year period.

A review of recent Metropolitan water management actions under shortage conditions was then undertaken to estimate the level of storage withdrawals and water transfers that Metropolitan may exercise under the 1990-92 hydrologies were identified. For this analysis, it was assumed that, if Metropolitan storage levels were greater than 2 MAF at the beginning of any year, Metropolitan would be willing to take up to 600 TAF out of storage in that year. Where Metropolitan storage supplies were between 1.2 MAF and 2 MAF at the beginning of the year, it was assumed that Metropolitan would be willing to take up to 400 TAF in that year. At storage levels below 1.2 MAF, it was assumed that Metropolitan would take up to 200 TAF in a given year.

It was also assumed that Metropolitan would be willing to purchase up to 300 TAF of water transfer in any given year. For years where demands still exceeded supplies after accounting for storage withdrawals, transfer purchases were estimated and compared against the 300 TAF limit.

Table 5-1: Metropolitan Three-Year Analysis

Study Year	Actual Year	SWP Allocation (%)	SWP (AF)	CRA (AF)	Total (AF)	Demand (AF)	Surplus/ Shortage (AF)	Storage at Year End (AF)	Transfers (AF)
2011	1990	30%	603,450	1,108,000	1,711,450	2,124,000	(400,000)	1,300,000	(12,550)
2012	1991	27%	542,820	1,108,000	1,650,820	2,123,000	(200,000)	1,100,000	(272,180)
2013	1992	26%	522,990	1,108,000	1,630,990	2,123,000	(200,000)	900,000	(292,010)

Based on the analysis above, Metropolitan would be able to meet firm demands under the driest three-year hydrologic scenario using the recent water management actions described above without re-implementing the WSAP for its member agencies. Given the assumed absence of an allocation, the estimated minimum imported water supplies available to MWDOC from Metropolitan is assumed to be equal to Metropolitan's estimate of demand for firm supplies for MWDOC, which Metropolitan uses when considering whether to impose mandatory restrictions. Thus, the estimate of the minimum imported supplies available to MWDOC is 261,577 AF[13].

MWDOC is expected to meet all retail consumption during a three-year dry period of 2011-2013 based on the three driest years on record. Metropolitan is expected to be able to supply all of MWDOC's imported water during the same period. Additionally, through a variety of groundwater reliability programs developed and operated by OCWD, local supplies are projected to be maintained at or above current levels. MWDOC is expected to fully meet retail demands for the next three years assuming Metropolitan is not in a shortage allocation and a BPP of 62% for local supplies for OCWD agencies.

Table 5-2: Three-Year Estimated Minimum Water Supply

Source	2010/2011	2011/2012	2012/2013
Local Water	227,487	227,487	227,487
Imported Water	261,577	261,577	261,577
Total	*489,064*	*489,064*	*489,064*

5.4. Catastrophic Supply Interruption

From a regional perspective, Orange County and all of Southern California is heavily dependent upon imported water supplies from Metropolitan. Imported water is conveyed through the SWP and CRA, which travel hundreds of miles to reach urban Southern California, and specifically to Orange County. Additionally, this water is distributed to

[13] Metropolitan 2010/11 Water Shortage Allocation Plan model (March 2011)

customers through an intricate network of pipes and water mains that are susceptible to damage from earthquakes and other disasters. Regional storage for Southern California and Orange County is provided by Metropolitan to mitigate an outage of either the SWP or CRA. Diamond Valley Lake, Metropolitan's newest reservoir located in Hemet, Riverside County is an 800,000 acre-foot reservoir, of which about 400,000 acre-feet of water is reserved for catastrophic emergencies. In fact, protection from catastrophic events such as earthquakes was a major reason for the construction of Diamond Valley Lake. Additionally, the Orange County Water purveyors have taken significant efforts to respond to emergencies through the formation of the Water Emergency Response Organization of Orange County (WEROC).

5.4.1. Metropolitan

Metropolitan has comprehensive plans for stages of actions it would undertake to address a catastrophic interruption in water supplies through its WSAP and WSDM Plans. Metropolitan also developed an Emergency Storage Requirement to mitigate against potential interruption in water supplies resulting from catastrophic occurrences within the southern California region, including seismic events along the San Andreas Fault. In addition, Metropolitan is working with the State to implement a comprehensive improvement plan to address catastrophic occurrences that could occur outside of the Southern California region, such as a maximum probable seismic event in the Delta that would cause levee failure and disruption of SWP deliveries. For greater detail on Metropolitan's planned responses to catastrophic interruption, please refer to Metropolitan's 2010 RUWMP.

5.4.2. Water Emergency Response Organization of Orange County

In 1983, the Orange County water community developed a Water Supply Emergency Preparedness Plan identified a need to develop a plan on how agencies would to respond effectively to disasters impacting the regional water distribution system. The collective efforts of these agencies resulted in the formation of the Water Emergency Response Organization of Orange County (WEROC) to coordinate emergency response with all Orange County water and wastewater agencies, develop an emergency plan to respond to disasters, and conduct disaster training exercises for the Orange County water community. WEROC was established with the creation of an indemnification agreement between its member agencies to protect each other against civil liabilities and to facilitate the exchange of resources. WEROC is unique in its ability to provide a single point of contact for representation of all water and wastewater utilities in Orange County during a disaster. This representation is to the county, state, and federal disaster coordination agencies. Within the Orange County Operational Area, WEROC is the recognized contact for emergency disaster response for the water community.

Each local water and wastewater utility is responsible for developing its own disaster preparedness and response plan to meet emergencies within their service area. WEROC

performs coordination of information and mutual-aid requests among water agencies, and with Metropolitan. WEROC provides assistance to utilities developing their plans and facilitates working groups when new best practices need to be examined or regulations come into effect. Additionally, WEROC supports the utilities efforts with training, exercise coordination, and representation to other emergency response agencies.

In the event of a major emergency or regional disaster WEROC would perform the following functions:

- Collect damage assessment reports from Orange County water and wastewater utilities;
- Assess the overall condition of the Orange County water supply system; including treatment, storage and distribution;
- Identify the information and resource needs of the impacted water and wastewater utilities;
- Quantify available resources, ;
- Determine optimal use of those resources and coordinate the exchange of those resources as mutual aid;
- Determine water supply needs, Establish repair priorities;
- Recommend water emergency allocations and coordinate water distribution as needed;
- Liaison with water utilities, Metropolitan, the Orange and County Operational Area and the California Emergency Management Agency; and
- Document remedial actions taken during the disaster operation and assist impacted agencies with the Federal Public Assistance process.

Two dedicated WEROC Emergency Operations Centers (EOCs) are located within Orange County. Both sites are maintained in a state of readiness in the event that they will be activated following a major emergency disaster. WEROC EOCs are staffed by trained volunteer personnel from the water community. WEROC's Emergency Radio Communication System consists of two mountain-top radio repeaters and several control stations. WEROC is a flexible and dynamic program that continues to make improvements to its emergency preparedness plan, emergency response facilities, and its training program to address new issues as they surface.

During a disaster, WEROC will work cooperatively with Metropolitan through their Member Agency Response System to facilitate the flow of information and requests for mutual-aid within Metropolitan's 5,100 square mile service area. WEROC also provides updated information to Metropolitan's EOC at Eagle Rock.

Day-to-day management of WEROC is provided by MWDOC. , Although MWDOC is a majority contributor to the WEROC budget, the program is also supported by the Orange County Water District, Orange County Sanitation District, South Orange County

Wastewater Authority and the three Cities of Anaheim, Fullerton and Santa Ana. Additionally, El Toro Water District and Metropolitan provide facility and maintenance support to the WEROC EOCs on a regular basis. Program oversight is conducted by the WEROC Executive Committee. The Executive Committee includes representatives from MWDOC and OCWD. A WEROC Steering Committee serves as an advisory group providing general guidance to the program, and includes representatives from member agencies, Metropolitan, the California Department of Public Health (CDPH), and the County Operational Area.

Additional emergency services mutual aid plans in the State of California include the Master Mutual Aid Agreement, and the California Water and Wastewater Agencies Agency Response Network (WARN), and Plan Bulldozer. The Master Mutual Aid Agreement includes all public agencies that have signed the agreement incorporated the Standardized Emergency Management System (SEMS), and is coordinated out by the California Office of Emergency Services Management Agency. WARN includes all public and private water and wastewater utilities that have signed the WARN agreement, and provides the opportunity for mutual aid assistance. WARN is managed coordinated by a State Steering Committee and can be activated by any signatory to the agreement. . Plan Bulldozer provides mutual aid for construction equipment to any public agency for the initial time of disaster when danger to life and property exists.

Table 5-3 summarizes possible catastrophe scenarios and actions that may be taken in response to a catastrophe. It should be noted that the summary of actions does not include actions that would be standard procedures that would normally occur to any catastrophe event, such as: information gathering and analysis; prioritizing damages and resource needs; coordinating water quality notices and public information; and determining if there is a need to reallocate water supply or to set up Point of Distribution sites for the public to receive drinking water.

Table 5-3: WEROC Preparation Actions for a Catastrophe

Possible Catastrophe	Summary of Actions[1]
Regional Power Outage	Coordinate communication with So. California Edison and Sempra Energy Co. for restoration of services. Provide contacts for vendors of rental generators and initiate mutual assistance between unaffected agencies for emergency backup power. Consult with the impacted utilities and the California Department of Public Health (CDPH) for water quality concerns and public notices.
Earthquake	Coordinate the resources necessary for repair of the Orange County water and wastewater agencies' infrastructure. Facilitate mutual aid from outside agencies through the Orange County Operational Area utilizing the above mentioned mutual aid agreements. Utilize WEROC Mutual Aid Directory and private vendor lists to identify available water

Possible Catastrophe	Summary of Actions[1]
	haulers, temporary water lines, piping, heavy equipment, etc.
Tsunami	If time allows, notify coastal agencies to take the appropriate actions for life safety; and if there is time protection of infrastructure. Request CDPH support in evaluating water contamination via salt water intrusion and backflow of raw sewer water. Support agency efforts to restore water flow in unique conditions of flooding (safety) and potentially lack of electricity. Continue support similar to an earthquake response.
Malicious Act	Since such an incident typically involves a long-term response with law enforcement. WEROC could support the agency with staff, communications with the County, and resources required for recovery of operational systems. In addition, coordination of WEROC water quality advisors, CDPH, and public information officers will be critical.
Flooding	Coordination with the Orange County Public Works Department for flood control support. Coordination of mutual assistance for repair of infrastructure.
Dam Failure	Identify impacts to water resources and resource management for the county during the current weather season and conditions. Evaluate the need and ability for accelerated reconstruction and/or restoration of services.
SONGS – Nuclear Release	Work with the CDPH and the Orange County retail water agencies that have open water sources to determine impacts to water quality and appropriate protective actions. Work with agencies within the fallout zone to determine current operational capabilities and future use of infrastructure in the affected area.
Wild Land Fire	Coordinate with Fire Unified Command Post to ensure that information and resource needs are being met. Ensure that fire protection is being provided to critical infrastructure and that responding agencies understand the impacts of losing infrastructure. Refer to actions in the "Regional Power Outage" for loss of power to pumps due to fire. Coordinate mutual aid as needed.
Water Contamination	Contamination can be from multiple sources: malicious, sewer leak, underground contaminated plume, etc. WEROC would provide information and resource coordination support to the impacted agency if requested. The WEROC Public Information Officer will work with the agency and the media to ensure proper information is provided to the public for their health and safety.
Hazardous Materials Spill/Release	Communicate with impacted agencies to determine the impact to water supply and quality. Provide coordination with responding agencies if necessary. The WEROC Public Information Officer will work with the agency and the media to ensure proper information is provided to the public for their health and safety. Coordinate with Environmental Health Services for cleanup.

Possible Catastrophe	Summary of Actions[1]
Pandemic	Communicate recommended health precautions from the County Public Health Officer. Advocate on behalf of the utilities for any medication that may be made available to first responders only. Assistant agencies in identifying critical functions, mandatory staffing and reduced staffing operations. Coordinate resource allocations if resources become sparse.
Severe Drought	Facilitate a coordinated public information campaign. Coordinate with other government agencies on severe conservation measures and ensure understanding of the impacts.

[1] MWDOC has no facilities of its own.

5.5. Prohibitions, Penalties and Consumption Reduction Methods

Working with its member agencies, MWDOC is able to reduce its demands on Metropolitan during water shortages. Although MWDOC may actually require more water during water shortages to offset losses of local supplies, it is able to maintain this demand at a lower level than would be possible if water reduction mechanisms were not implemented. A variety of mechanisms, such as mandatory prohibitions, consumption reductions, and penalties and charges has been and can be implemented during water shortages.

5.5.1. Mandatory Water Use Prohibitions

Because MWDOC's does not have power to enforce restriction on the use of water, as a practical matter, mandatory use prohibitions would be difficult for MWDOC to enforce given the different sources of water accessed by end users. The establishment of mandatory prohibitions on water usage during water shortages is therefore not part of MWDOC's Plan under Water Code Section 10620 (c). However, historically MWDOC has focused its activity in developing shortage allocation plans that include water purchase allocations and penalties. MWDOC has also worked with its agencies and others in communicating the conservation need to the general public and in coordinating development of messages and themes. In addition, MWDOC has urged its retail agencies to develop specific shortage management plans to meet targeted reduction in total water demand during a shortage. Retail agencies of MWDOC will address mandatory prohibitions during water shortages in their individual UWMPs.

5.5.2. Consumption Reduction Methods

As mentioned in Section 5.5.1, MWDOC does not have power to enforce restriction on the use of water. Therefore, it is more appropriate for water reduction methods to be applied to the public through the retail agencies. Reductions in water consumption by MWDOC's retail agencies during water shortages will ultimately reduce MWDOC's

overall demands on Metropolitan. MWDOC's Board has the authority to provide for a method of allocation for available supplies, as the Board may determine necessary, through adoption of a Water Shortage Management Plan for all classes of service. Each retail agency decides how it will allocate supplies it receives from MWDOC during water shortages. Retail agencies of MWDOC will address water reduction methods during water shortages in their individual UWMPs.

5.6. Impacts to Revenue

During water shortages, MWDOC's revenues and expenditures simultaneously increase as MWDOC purchases more water from Metropolitan to offset reductions in local supplies. There are two potential revenue related issues for which MWDOC must plan: loss of Incremental Rate Revenue due to reduced water sales in a shortage, and increased cost to purchase Tier 2 water during high demand episodes caused by drought conditions.

5.6.1. MWDOC Incremental Water Rate

MWDOC's operating budget is funded from two rate components. One is a fixed annual Retail Meter Charge collected from MWDOC's member agencies for each retail water meter in their service area. This charge provides a stable source of revenue that does not vary with weather or water sales. The other is a commodity Incremental Water Rate (per acre foot of water sold). Revenue from this Incremental Rate increases when water sales rise, and decreases when sales fall. To the extent a water shortage causes water sales to drop, the shortfall in revenue would be made up from reserves held by MWDOC for this purpose.

5.6.2. Metropolitan Tiered Supply Rate and MWDOC Melded Supply Rate

Metropolitan charges for its full service supply to MWDOC using a Tiered Rate. MWDOC has the ability to purchase up to 228,130 acre-feet at the Tier One supply rate. However, additional water purchased above the pre-determined Tier One demand is at Metropolitan's Tier Two water rate. Tier Two water is sold at a higher price than Tier One water. MWDOC sells water to its retail agencies at a Melded Supply rate. The Melded Supply rate is set each year based on the expected combined cost of Tier One and Tier Two purchases – plus or minus any adjustment to add or decrease from reserves.

In June of 2002, MWDOC adopted a resolution establishing a Tier Two Contingency Fund to offset any Tier Two costs that MWDOC may incur from Metropolitan. The goal of the Tier Two Contingency Fund is to maintain stable water rates regardless of whether variations or other unexpected increases in demand of imported water. The melded water supply rate is higher than Metropolitan's Tier One water supply rate. The revenue difference between MWDOC's Melded Supply rate and Metropolitan's Tier One rate is deposited into a restricted fund, the Tier Two Contingency Fund.

Uses of funds in the Tier Two Contingency Fund are restricted to the following:

- Payment of Tier Two costs if MWDOC's water purchases from Metropolitan exceed the Tier One level;
- Advances to the General Fund to pay charges imposed on MWDOC by Metropolitan, in which the revenues are collected in a period that is different than the payment date. All advances are repaid to the Fund when the charges are collected from the retail agencies; and
- If the funds are not immediately needed for the previous two items, the Board may utilize the funds to offset any increase in water rates or charges imposed by Metropolitan which would require a rate increase by MWDOC.

If the Board determines that any portion of the Tier Two Contingency Fund is no longer needed for the purposes they were designated, then the Board will declare those funds surplus. The Board may either adjust the melded rate to reflect the surplus or distribute the surplus to each retail water agency in proportion to the amount of the melded rate each water agency purchased in the preceding two fiscal years.

5.7. Reduction Measuring Mechanism

The establishment of a method to measure water consumption reductions during water shortages is necessary to determine the effectiveness of water reduction measures. Although MWDOC, as a wholesale supplier, would have difficulty enforcing water reduction measures upon end users, MWDOC does work closely with its member agencies to develop plans to meet targeted reductions. To monitor the effectiveness, MWDOC generally relies on monthly reading of Metropolitan's meter connection. Monthly reading would allow MWDOC to evaluate the trends of consumption at the retail agency level.

MWDOC's retail agencies will address methods to determine water consumption reductions in their individual UWMPs.

6. **Recycled Water**

6.1. Agency Coordination

MWDOC does not produce or manage recycled water, but does support, encourage and partner in recycled water efforts in its service area. Recycled water planning within MWDOC's service area requires close coordination with multiple agencies that, in many instances, have overlapping jurisdictional boundaries, leading to institutional hurdles. The Southern California Water Reclamation and Reuse Study (SCWRRS), a six-year study led by the U.S. was completed in 2002 help to identify short- and long-term recycled water implementation plans for areas throughout California, including four sub-regional plans within MWDOC's service area. Following that effort, the local agencies, including OCWD have continuing working to identify opportunities for the use of recycled supplies for both irrigation purposes, groundwater recharge and in some non-irrigation applications. MWDOC also facilitated discussions of opportunities in West Orange County, including looking to potential partners in Los Angeles County and in North Orange County in conjunction with the City of La Habra. These options are still potentially available, although the primary obstacle seems to be one of funding of the capital needs for the projects.

6.2. Wastewater Description and Disposal

6.2.1. Overview

Wastewater collection and treatment within MWDOC's service area is managed by multiple agencies ranging from local agencies handling both potable water and wastewater to large regional agencies.

Table 6-1 summarizes the past, current, and projected wastewater volumes collected and treated, and the quantity of wastewater treated to recycled water standards for treatment plants within MWDOC's service area. Table 6-2 summarizes the disposal method, and treatment level of discharge volumes.

Table 6-1: Wastewater Collection and Treatment (AFY)

Type of Wastewater	Fiscal Year Ending						
	2005	2010	2015	2020	2025	2030	2035
Wastewater Collected & Treated in Service Area	344,045	313,107	393,351	411,771	424,232	433,426	438,321
Volume that Meets Recycled Water Standards	41,860	111,653	149,168	155,431	163,414	163,820	164,071

Table 6-2: Disposal of Wastewater (Non-Recycled) (AFY)

Method of Disposal	Treatment Level	Fiscal Year Ending					
		2010	2015	2020	2025	2030	2035
Ocean Outfall	Secondary/Tertiary	201,454	244,183	256,340	260,818	269,606	274,250

6.2.2. Orange County Sanitation District

Orange County Sanitation District (OCSD) collects wastewater from residential, commercial, and industrial customers in 21 cities, three special districts, and portions of unincorporated Orange County, totaling 471 square miles serving approximately 2.4 million residents. Its wastewater system is the third largest west of the Mississippi River. OCSD treats an average daily flow of 264 MGD or approximately 266,472 AFY. These flows include dry weather urban runoff collected from 15 diversion points and discharged into the sewer system for treatment and Santa Ana Regional Interceptor (SARI) flows from the upper Santa Ana watershed. During the dry weather period, May through September, diverted flows range between 0.7 to 2.6 MGD. During wet months, diverted flows range from 0.4 to 1.4 MGD.

OCSD operates and maintains two treatment plants: Reclamation Plant No. 1, located in Fountain Valley with a capacity of 218 MGD, and Treatment Plant No. 2 located in Huntington Beach with a capacity of 168 MGD. OCSD also operates 650 miles of collection system, with pipelines ranging in size from 6 to 96 inches in diameter along with 20 pump stations. The treated wastewater is discharged to the Pacific Ocean via an ocean outfall in strict and consistent compliance with state and federal requirements as set forth in OCSD's National Pollutant Discharge Elimination System permit, while approximately 10 MGD is reclaimed at facilities operated by the OCWD. OCSD’s outfall is 120 inches in diameter and extends four miles into the ocean with an additional one mile long diffuser. Its high tide hydraulic capacity is 480 MGD. A 78-inch-diameter outfall extending one mile offshore is available for emergency situations. Two additional

outfalls are located at the Santa Ana River for use in extreme emergency overflow conditions only.

Biosolids are 100% land applied as an agricultural soil amendment, while grit and screenings are transported under contract for landfill disposal.

OCSD Reclamation Plant No. 1 - Reclamation Plant No. 1 treats raw wastewater conveyed from six major sewer lines. On average the plant treats approximately 120 MGD of wastewater. The maximum treatment capacity is 218 MGD. The plant provides advanced primary and secondary treatment and supplies secondary treated water to OCWD for further treatment to recycled water standards and distribution. This is the only OCSD treatment plant that provides water to OCWD for reclamation. An interplant pipeline allows flows to be conveyed to Treatment Plant No. 2. Management of interplant flows allows for minimum flow requirements for reclamation facilities to be met during off-peak hours.

OCSD Treatment Plant No. 2 - Treatment Plant No. 2 provides a mix of advanced primary and secondary treatment. Influent is received via five major sewers and Reclamation Plant No. 1. The average dry weather treatment flow rate is 144 MGD. The maximum treatment capacity is 168 MGD. All treated wastewater is discharged to the ocean through the ocean outfall.

6.2.3. South Orange County Wastewater Authority

SOCWA is a Joint Powers Authority created on July 1, 2001. It was formed as the legal successor to three agencies: Aliso Water Management Agency, South East Regional Reclamation Authority, and South Orange County Reclamation Authority. SOCRA Member agencies include: City of Laguna Beach, City of San Clemente, City of San Juan Capistrano, El Toro Water District, Emerald Bay Service District, Irvine Ranch Water District, Moulton Niguel Water District, Santa Margarita Water District, South Coast Water District, and Trabuco Canyon Water District. All of these service areas receive wholesale water through MWDOC. The service area encompasses approximately 220 square miles including the Aliso Creek, Laguna Canyon, and San Juan Creek Watersheds.

Within its service area, SOCWA operates four wastewater treatment plants, an additional eight wastewater treatment plants are operated by SOCWA member agencies. Wastewater in the service area is collected at the local and regional level through a series of interceptors that convey influent to the wastewater treatment plants. Treated effluent throughout the service area is conveyed to two gravity flow ocean outfalls, Aliso Creek Outfall and San Juan Creek Outfall, operated by SOCWA. These outfalls have a gravity flow capacity of 50 MGD and 24 MGD (80 MGD pumped), respectively. Aliso Creek outfall extends approximately 7,900 feet offshore near Aliso Creek. San Juan Creek

outfall extends 10,550 feet offshore near Doheny Beach and the mouth of San Juan Creek. Ultimately, the hydraulic capacity of the San Juan Creek Outfall will be expanded to 31.5 MGD. At a minimum, full secondary treatment is provided at wastewater treatment plants within the service area, with most plants exceeding this level of treatment.

SOCWA Coastal Treatment Plant - SOCWA's Coastal Treatment Plant (CTP) located in the City of Laguna Niguel has a maximum influent capacity of 6.7 MGD. Effluent has been treated to secondary or tertiary levels dependent upon disposal or reuse of the wastewater for recycling. Recycled water is treated to applicable Title 22 standards. Treated effluent that is not recycled is disposed through the Aliso Creek Outfall Ocean Outfall. In 2010, 4,400 acre-feet of dry weather flows were collected and treated on average of which 900 acre-feet was used as recycled water.

SOCWA Joint Regional Treatment Plant - The Joint Regional Treatment Plant (JRTP) with a maximum influent capacity of 12 MGD lies within the City of Laguna Niguel and is operated by SOCWA. Effluent has been treated to secondary or tertiary levels dependent upon disposal or reuse of the wastewater for recycling. Recycled water is treated to applicable Title 22 standards. Non-recycled effluent is conveyed to the Aliso Creek Ocean Outfall via the SOCWA Effluent Transmission Main. In 2010, the JRTP received and treated an average dry weather flow of 10,420 acre-feet with 6,721 acre-feet treated to recycled water standards.

SOCWA Plant 3A - Plant 3A is located within the City of Laguna Niguel and is operated by SOCWA. The maximum influent capacity is 6 MGD. Effluent has been treated to secondary or tertiary levels dependent upon disposal or reuse of the wastewater for recycling. Recycled water is treated to applicable Title 22 standards. Unused effluent is conveyed to the San Juan Creek Outfall via the 3A Effluent Transmission Main. On average, in 2010 Plant 3A received and treated 2,352 acre-feet of dry weather flows of which 1,266 acre-feet were treated to recycle water standards.

SOCWA J. B. Latham Treatment Plant - SOCWA's J. B. Latham Treatment Plant is the largest plant in the service area with a design capacity of 13 MGD. This plant is located in the City of Dana Point. Effluent is currently treated to secondary levels. Effluent is conveyed directly to the San Juan Creek Outfall. In 2010, the average dry weather flows collected and treated were 10,977 acre-feet. None of the treated effluent currently meets recycled water standards.

6.3. Current Recycled Water Uses

Recycled water is widely accepted as a source for direct use and indirect use of water supply throughout MWDOC's service area. In the past, recycled water was mainly used for landscape irrigation. Large recycled water projects include: the Green Acres Project,

IRWD's recycled water projects, and the GWRS. GWRS uses include injection for sea water barriers and groundwater recharge. Groundwater recharge will surpass landscape irrigation as the greatest consumer of recycled water in Orange County. IRWD is at the forefront of using recycled water not only for irrigation, but also for other uses such as toilet flushing and commercial uses. Other agencies in south Orange County, such as Moulton Niguel Water District and Santa Margarita Water District use a significant amount of recycled water. Recycled water in Orange County is treated to various levels dependent upon the ultimate end use and in accordance with Title 22 regulations.

OCWD Green Acres Project **-** The Green Acres Project (GAP) is a water recycling effort that provides recycled water for landscape irrigation at parks, schools and golf courses as well as for industrial uses, such as carpet dyeing.

GAP provides an alternate source of non-potable irrigation water to the cities of Fountain Valley, Huntington Beach, Newport Beach, Santa Ana, and Mesa Consolidated Water District. Current water users include Mile Square Park in Fountain Valley, Costa Mesa Golf Course, Home Ranch bean field and Chroma Systems carpet dyeing. Due to a growing demand for water in Orange County, it is sensible that recycled water be used whenever possible for irrigation and industrial uses to supplement groundwater. The GAP has the capacity to purify 7.5 MGD of reclaimed water from OCSD.

OCWD Groundwater Replenishment System **-** The GWRS, which has been operational since January 2008, takes treated wastewater from Orange County Sanitation District and purifies it to levels that meet state and federal drinking water standards. It uses a three-step process that includes reverse osmosis, microfiltration and ultraviolet light and hydrogen peroxide advanced oxidation treatment. The treated water is then injected into the seawater barrier to help prevent seawater intrusion into the groundwater basin and is percolated into deep aquifers where it eventually becomes part of Orange County's drinking water supply.

The design and construction of the GWRS was a project jointly-funded by OCWD and OCSD. These two public agencies have worked together for more than 30 years and began the GWRS planning in the mid-1990s. They have led the way in water recycling and providing a locally-controlled, drought-proof and reliable supply of high-quality water in an environmentally sensitive and economical manner.

The GWRS has a current production capacity of 70 MGD (23.5 billion gallons per year). Once the water has been treated with the three-step process at the GWRS, treatment facilities, approximately 35 MGD of GWRS water is pumped into injection wells where it serves as a seawater intrusion barrier. Another 35 MGD is pumped to recharge basins in the City of Anaheim, where GWRS water filters through sand and gravel to replenish the deep aquifers of north and central Orange County's groundwater basin.

ETWD Recycling Plant - El Toro Water District Water Recycling Plant is operated by El Toro Water District and is located in the City of Laguna Wood. The plant has a maximum influent capacity of 6 MGD. Wastewater is treated to a secondary to Title 22 standards depending upon the ultimate use of the effluent. In 2010, 4,220 acre-feet of secondary treated effluent is disposed via the SOCWA Effluent Transmission Main to the Aliso Creek Ocean Outfall and 430 acre-feet of effluent is treated to a tertiary level meeting Title 22 standards and is sent to the recycled water distribution system.

SMWD Chiquita Water Reclamation Plant - Chiquita Water Reclamation Plant (CWRP) is operated by Santa Margarita Water District and is located in Chiquita Canyon. Wastewater is treated to a tertiary level with recycled water treated to Title 22 standards. CWRP has a maximum design capacity of 8 MGD with plans to increase its size to 10 MGD by 2025. In 2010, approximately 2,511 acre-feet was recycled, with the majority of the effluent, 7,569 acre-feet, disposed via the Chiquita Land Outfall with a connection to the San Juan Creek Ocean Outfall.

SMWD Oso Creek Water Reclamation Plant - Oso Creek Water Reclamation Plant (OCWRP) is located along Oso Creek and is operated by Santa Margarita Water District. At this facility, wastewater is treated to a secondary level with recycled water treated to Title 22 standards. A bypass facility allows for excess wastewater to be sent to the previously discussed J.B. Latham Treatment Plant as OCWRP has no outfalls. Without the ability to discharge treated effluent, excess flows beyond recycled water demands are required to be sent to J.B. Latham Treatment Plant. OCWRP has a maximum design capacity of 3 MGD. In 2010, approximately 1,496 acre-feet, is treated and recycled. OCWRP is a clipping plant that removes wastewater from the main sewer trunk line.

SMWD Nichols Institute Water Reclamation Plant - The Nichols Institute Water Reclamation Plant is operated by Santa Margarita Water District and owned by a private company that owns property within SMWD's boundaries. This small facility treats approximately 34 AFY. No outfall is available for this facility. Therefore, all wastewater is treated to Title 22 standards for recycling purposes. Since this facility is remote from the existing water and wastewater facilities, SMWD is not obligated to provide an alternate source of water in the even the Nichols facility becomes inoperable or unusable.

San Clemente Water Reclamation Plant - The City of San Clemente owns and operates the San Clemente Water Reclamation Plant located within the city. The San Clemente Water Reclamation Plant has a design capacity of 7 MGD and treats wastewater to secondary or tertiary levels dependent upon if the water will be recycled or disposed. In 2010, approximately 900 acre-feet were recycled. Any water in excess of the plant's recycling limit is conveyed to the San Juan Creek Ocean Outfall via the San Clemente Land Outfall. Recycling capacity is currently 2.2 MGD with plans to expand to 4.4 MGD.

IRWD Los Alisos Water Reclamation Plant - Los Alisos Water Reclamation Plant (LAWRP) is operated by IRWD and is located in the City of Lake Forest. LAWRP has a capacity of 7.5 MGD. Wastewater is treated to a secondary or tertiary level dependent upon the ultimate use of the effluent. In 2010, approximately 1,470 acre-feet were recycled. When excess water beyond its tertiary treatment capacity is received, it is conveyed to the SOCWA Effluent Transmission Main for disposal via the Aliso Creek Ocean Outfall.

IRWD Michelson Water Reclamation Plant - Michelson Water Reclamation Plant (MWRP) is located in the city of Irvine and is operated by IRWD. MWRP currently has a maximum influent capacity of 18 MGD with plans to expand to 28 MGD by 2025 to meet non-potable demands. Wastewater is treated to a tertiary level with advanced treatment in the form of nitrification/denitrification. All effluent meets Title 22 standards for unrestricted use, except for potable water consumption. All effluent produced by the plant is conveyed to the recycled water distribution system. In 2010, approximately 20,150 acre-feet were recycled.

TCWD Robinson Ranch Water Reclamation Plant - Robinson Ranch Water Reclamation Plant (RRWRP) is operated by Trabuco Canyon Water District and is located in Trabuco Canyon, an unincorporated area of Orange County. RRWRP has a maximum capacity of 0.85 MGD. In 2010, average dry weather flows collected and treated were 809 acre-feet. Wastewater is treated to a secondary level and Title 22 standards. All of the wastewater is recycled as the plant is not permitted to have stream discharges, and it is unfeasible to connect to the existing outfalls in the SOCWA service area.

MNWD JRTP Advanced Wastewater Treatment Plants - MNWD's JRTP Advanced Wastewater Treatment (AWT) Plants are operated by SOCWA and are located in the City of Laguna Niguel. AWT No. 1 facility has a capacity of 2.4 MGD, and AWT No. 2 facility has a capacity of 9 MGD. Wastewater is treated to Title 22 standards. In 2010, approximately 6,721 acre-feet were recycled.

MNWD Plant 3A Advanced Wastewater Treatment Plant - MNWD's Plant 3A Advanced Wastewater Treatment (AWT) Plant is operated by SOCWA and is located within the City of Laguna Niguel. The Plant 3A AWT was placed on line in 1991 and has a capacity of 2.4 MGD. Wastewater is treated to Title 22 standards. In 2010, approximately 1,266 acre-feet were recycled.

SCWD CTP Advanced Wastewater Treatment Plant - SCWD's CTP Advanced Wastewater Treatment (AWT) Plant is operated by SOCWA and is located in the City of Laguna Niguel. The CTP AWT has a capacity of 2.6 MGD. Wastewater is treated to Title 22 standards. In 2010, approximately 900 acre-feet were recycled.

Table 6-3 below illustrates the current uses for recycled water within MWDOC's service area. The usage is limited to landscape irrigation with a secondary and tertiary treatment level.

Table 6-3: Current Recycled Water Uses (AFY)

User Type	Treatment Level	Fiscal Year Ending
		2010
Agriculture		
Landscape	Secondary/Tertiary	39,642
Wildlife Habitat		
Wetlands		
Industrial		
Total		**39,642**

6.4. Potential Recycled Water Uses

Potential recycled water use within MWDOC's service area hinges upon many variables including, but not limited to, economics of treatment and distribution system extension (as well as site retrofits), water quality, public acceptance, infrastructure requirements, and reliability. Recycled water quality, in combination with the tolerance of landscaping to high total dissolved solid levels, plays a large role in whether irrigation with recycled water is feasible. Recycled water that has TDS levels that constantly or occasionally exceed the tolerance level of specific landscape requirements will result in adverse impacts to the landscape. Therefore, some users are not able to utilize recycled water unless TDS levels are held below specific plant-based thresholds.

Even with high identified demands, it is not necessarily economically feasible to provide recycled water to all potential users. Expansion of recycled water systems eventually reaches a point where returns diminish and higher investments for expansion are not cost effective. Water recycling projects involve collecting and treating wastewater to applicable standards dependent upon the ultimate end use, storing recycled water for seasonal use, pipeline construction, pump station installation, and plumbing retrofits for existing end users or dual plumbing systems for new users. Creative solutions to secure funding, overcome regulatory requirements, institutional arrangements, and public acceptance are required to offset existing potable demands with potential recycled water demands.

OCWD Groundwater Replenishment System Expansion - At this time, OCWD has designed and approved proceeding with the Phase 2 expansion of GWRS, which will recycle approximately another 28 MGD of effluent. Investments beyond Phase 2 have not been approved by OCWD and would require further review before proceeding. If the further envisioned phase of the project is approved and developed, it is projected that up to 118 MGD of water will be produced.

IRWD Michelson Water Reclamation Plant Expansion - Michelson Water Reclamation Plant (MWRP) currently has a maximum influent capacity of 18 MGD. To keep up with a growing demand for potable water and a decreasing imported water supply, IRWD will increase the capacity from 18 MGD to 28 MGD by 2025. Design of this project started in September 2006 and was completed in March 2009. Construction began in September 2009 and is anticipated to be completed by July 2012.

San Clemente Water Reclamation Plant Expansion - The San Clemente Water Reclamation Plant located within the City currently has a capacity of 2.2 MGD. The City of San Clemente plans to expand the plant to 4.4 MGD. The expansion will include nearly 9 miles of pipelines, conversion of a domestic water reservoir to recycled water storage, and a pressure reducing station as well as an interconnection with SMWD. Design of this project was completed in spring 2010 and construction is estimated to begin in the fall of 2011 with the first phase of new recycled water customers to come online in 2013.

SMWD Chiquita Water Reclamation Plant Expansion - Chiquita Water Reclamation Plant (CWRP) currently has a capacity of 8 MGD. SMWD plans to expand the plant to 10 MGD by 2025. The expansion will increase total production and reduce dependency on imported water.

SCWD Aliso Creek Water Harvesting Project - SCWD has conducted a preliminary investigation of a project to intercept and treat a portion of the urban runoff in lower Aliso Creek to supplement the recycled water system. This would improve the quality of the recycled water supply to make it more attractive for irrigation users. Treatment would include filtration and reverse osmosis facilities near SOCWA's CTP. The plant would produce up to 0.5 MGD of low TDS water.

Tables 6-4 and 6-5 represent projected recycled water use within MWDOC's service area through 2035. Recycled water use will increase by 50% through the 25-year period, with landscape irrigation as its sole use.

Table 6-4: Projected Future Use of Recycled Water in Service Area (AFY)

User Type	Fiscal Year Ending					
	2010	2015	2020	2025	2030	2035
Projected Use of Recycled Water	39,642	51,658	55,699	59,324	59,492	59,597

Table 6-5: Projected Recycled Water Uses (AFY)

User Type	Treatment Level	Fiscal Year Ending				
		2015	2020	2025	2030	2035
Agriculture						
Landscape	Secondary/Tertiary	51,658	55,699	59,324	59,492	59,597
Wildlife Habitat						
Wetlands						
Industrial						
Total		**51,658**	**55,699**	**59,324**	**59,492**	**59,597**

Table 6-6 compares the recycled water use projections from MWDOC's 2005 RUWMP with actual 2010 recycled water use.

Table 6-6: Recycled Water Uses – 2005 Projections compared with 2010 Actual (AFY)

User Type	2005 Projection for 2010	2010 Actual Use
Agriculture		
Landscape	51,388	39,642
Wildlife Habitat		
Wetlands		
Industrial		
Groundwater Recharge		
Total	**51,388**	**39,642**

6.4.1. Direct Non-Potable Reuse

Direct non-potable recycled water reuse totaled 39,642 acre-feet in the MWDOC service area in 2010. In 2035, direct non-potable recycled water usage is projected to reach nearly 59,597 acre-feet, an increase of 50% from 2010.

6.4.2. Indirect Potable Reuse

The indirect potable water reuse for groundwater recharge and seawater barriers is expected to reach 102,000 acre-feet by 2015, almost two times its current use. Such an increase is due to the GWRS. This single recharge project will ultimately supply 132,000 AFY if the further envisioned phase of the project are approved and developed.

6.5. Optimization Plan

Metropolitan and MWDOC supports research efforts to encourage development and use of recycled water. These include conducting studies and research to address public concerns, developing new technologies, and assessing health effects. Addressing public concerns is required to gain the support of stakeholders early in the planning process. Education is required to inform the public of treatment processes. Developing new technologies is a prerequisite to help reduce the cost of producing recycled water. Health effects assessments have a two-fold purpose of alleviating public concerns and ensuring the protection of public health and the environment. Further research supported by Metropolitan and others (such as the National Water Research Institute) will have the benefit of reducing risks for MWDOC's retail agencies.

Over the next 25 years, recycled water production is projected to increase to 164,071 AFY in 2035 including GWRS production. This means that 37% of the wastewater generated in the MWDOC service area will be recycled, becoming a significant and valuable resource. To assist in meeting these projections, MWDOC plans to take numerous actions to facilitate the use and production of recycled water within its service area. However, MWDOC is a wholesaler and, as such, cannot impose development requirements or enact ordinances that require the use of recycled water. Most recycled water projects that provide the greatest benefit for the cost have been developed or are planned. In many cases, additional recycled water production and use is economically unfeasible given the current cost of potable water supplies in comparison to recycled water costs. MWDOC has taken the following actions to facilitate further production and use of recycled water:

- Sponsoring member agencies in obtaining Local Resources Program (LRP) incentives from Metropolitan;
- Assisting and supporting member agencies in applications made for bond funds such as Proposition 84;
- Encouraging Metropolitan to participate in studies that will benefit recycled water production;
- Supporting Metropolitan in deriving solutions to regulatory issues;
- Participating in regional plan such as the South Orange County IRWMP;
- Working cooperatively with member agencies, Metropolitan and its member agencies, and other Orange County water and wastewater agencies to encourage

recycled water use and to develop creative solutions to increasing recycled water use.

Dealing with needed additional funding and other implementation barriers for recycled water at the state and regional level would assist in increasing recycled water production within MWDOC's service area. State funding assistance could reduce the overall cost per acre-foot of recycled water so that it is comparable to the cost of potable water would allow the development of more expensive recycled water projects in an earlier timeframe. There are numerous barriers to increasing water recycling that could be addressed at the State level These include establishment of uniform Regional Water Quality Control Board (RWQCB) requirements for recycled water, especially in areas where water and wastewater agency jurisdictions cross RWQCB jurisdictions resulting in varying requirements; partnering in health studies to illustrate the safety of recycled water; increasing public education; and establishing uniform requirements for retrofitting facilities to accept recycled water.

7. Future Water Supply Projects and Programs

7.1. Water Management Tools

MWDOC has worked closely with its member agencies to decrease dependence and/or increase their supply reliability by further developing local supplies. Additional local supplies improve both local and regional reliability.

Although MWDOC is not responsible for carrying out specific supply development projects in the region, it follows closely with those currently being developed by its member agencies.

7.2. Transfer or Exchange Opportunities

Metropolitan currently has a tiered unbundled rate structure. Tier 2 of this rate structure increases the cost of supply to a member agency in order to provide a price signal that encourages development of alternative supply sources. One alternative source of supply may be a transfer or exchange of water with a different agency.

The CALFED Bay-Delta Program has helped to develop an effective market for water transactions in the Bay-Delta region. This market is demonstrated by the water purchases made by the Environmental Water Account and Metropolitan in recent years. MWDOC and its member agencies plan to evaluate selected transfer or exchange opportunities in the future. These opportunities can help ensure supply reliability in dry years and avoid the higher Tier 2 cost of supply from Metropolitan. The continued development of a market for water transactions under CALFED will only increase the likelihood of MWDOC's participation in this market when appropriate opportunities arise.

Mesa Consolidated Water District - Mesa plans to expand their Colored Water Treatment Facility. With this expansion, Mesa is exploring opportunities that may develop into potential transfer or exchange opportunities. These would include the selling of excess pumped water from the expansion to purchasing groundwater-pumping capacity from neighboring cities.

IRWD Strand Ranch Water Banking Program - IRWD has completed negotiations with Metropolitan and MWDOC and prepared an agreement that will accommodate the recharge, storage and recovery of SWP water at the IRWD Strand Ranch Integrated Banking Project and the delivery by exchange of this water to the IRWD service area. IRWD will be securing and placing into storage water in the Strand Ranch project water that will come from multiple sources. The project involves 50,000 AF of storage capacity located in Kern County. Metropolitan's SWP supply contract with DWR prohibits the import of SWP water into Metropolitan's service area without Metropolitan's consent.

IRWD, MWDOC and Metropolitan authorized the execution of an Agreement on the negotiated final terms.

7.3. Planned Water Supply Projects and Programs

The following agencies are developing projects to meet the projected water use for the region as shown in Table 7-1 (further detail of these projects should be available in the UWMPs developed by each member agency):

Baker Water Treatment Plant - The Baker Pipeline Regional Water Treatment Plant is a 25 MGD proposed regional project that will be built at the existing IRWD Baker Filtration Plant site in the City of Lake Forest. The Plant will treat untreated water from the Santiago Lateral and Irvine Lake through the Baker Pipeline. The project is intended to provide increased water supply reliability to south Orange County by increasing local treatment capability from multiple water supply sources, including imported water and local surface water from Irvine Lake. Project partners include Irvine Ranch Water District, El Toro Water District, Moulton Niguel Water District, Santa Margarita Water District, and Trabuco Canyon Water District. The project is scheduled to begin construction in 2012 and expected to come online in 2013. The project will treat up to 28,000 AFY as shown in Table 7-1.

North Orange County Recycled Water Feasibility Study - MWDOC along with the City of La Habra conducted a study to determine the feasibility of a recycled water system in North Orange County. The potential customers include local and regional users; such as the cities of La Habra, Buena Park, and Fullerton. The project would include a 2 MGD treatment plant located in the City of La Habra and would use Membrane Biological Reactor (MBR) as the proposed treatment process. The distribution system would include a 1.23 MGD steel reservoir as well as a Booster Pumping Station at the plant. Next steps will be a detailed investigation and pursuit of project funding as well as pursuing additional recycled water users.

YLWD Recycled Water Study - Yorba Linda Water District (YLWD) is completing a Water Recycling Facilities Planning Study (WRFPS) which will investigate construction of a new 5 MGD water recycling facility. The water recycling facilities plan will investigate the diversion of raw wastewater from existing trunk sewer pipelines within YLWD into a new water recycling facility (i.e. scalping plant) to produce Title 22 recycled water within YLWD. The WRFPS will determine effectiveness of a future 5 MGD Wastewater Treatment Plant within YLWD's service area. The WRFPS should be completed by spring 2011, and if project is feasible a target completion date of 2014 is forecasted.

IRWD Interconnection Project - This project became operational in 2009 and involved construction of a permanent interconnection and pumping facilities between the IRWD

potable water distribution system and the Joint Regional Transmission Main (JRTM) and the Aufdenkamp Transmission Main (ATM) that conveys water into South Orange County. The project has the ability to transfer up to 30 cfs of supplies during emergency situations only.

SMWD Upper Chiquita Reservoir Project - SMWD is constructing the Upper Chiquita Reservoir with a capacity of 244 MG, near Oso Parkway and the 241 Toll Road. The reservoir will act as a large-scale emergency potable water supply during planned or unplanned service disruptions for South Orange County agencies. Construction began in 2009 and is expected to be completed in summer 2011. The project will provide 750 AFY as illustrated in Table 7-1.

SCWD Aliso Creek Streamflow Recovery Facilities Project - SCWD has conducted a preliminary investigation of a project to intercept and treat a portion of the urban runoff flows in Aliso Creek to supplement SCWD's potable water system. This would provide a significant quantity of locally produced potable water through the existing potable water distribution system. The proposed project can be done separately or in conjunction with the Aliso Creek Harvesting Project. The project would produce up to 2 MGD of product water to SCWD's potable water distribution system or for blending with the recycled water supply.

San Juan Capistrano Recycled Water – The City of San Juan Capistrano is currently working with its neighboring agencies SMWD and MNWD to make arrangements to use recycled water, when available from these agencies. Plans for a local recycled water treatment plant at SOCWA's Latham Plant have been indefinitely delayed.

ETWD Recycled Water Distribution Capacity Expansion – ETWD is currently in the planning stage of a significant expansion of its recycled water distribution capacity. The proposed project would construct a new recycled water distribution piping supplied by imported tertiary treated recycled water from MNWD and IRWD. The proposed project, expected to be in service by 2015 would increase ETWD's recycled water supply by as much as 750 AFY.

Table 7-1: Specific Planned Water Supply Projects and Programs

Project Name	Projected Start Date	Projected Completion Date	Normal-Year Supply to Agency (AF)	Single-Dry Year Yield (AF)	Multiple-Dry-Year 1 Yield (AF)	Multiple-Dry-Year 2 Yield (AF)	Multiple-Dry-Year 3 Yield (AF)
Baker Water Treatment Plant	2009	2013	28,000	28,000	28,000	28,000	28,000
Upper Chiquita Reservoir Project	2009	2011	750	750	750	750	750
ETWD Recycled Water Expansion		2015	750	750	750	750	750

7.4. Desalination Opportunities

Water treatment technology has continued to advance, and costs have continued to decrease, providing greater opportunities to develop previously unusable surface water, groundwater, wastewater, and ocean water for potable water supply. One of the great success stories in advanced water treatment technology since its invention in the mid-1960s at University of California Los Angeles has been the development and advancement of Reverse Osmosis (RO) membrane systems. Membrane systems have seen increasing application in water supply for removal of salts and other constituents, such as synthetic and natural organic compounds. In addition, many other advanced water treatment technologies, such as advanced oxidation and improved disinfection methods, have been developed and are continuing to be invented and further refined. These unit processes, including membrane systems, can be used in various arrays to meet particular water treatment needs for a given water source.

Today, membrane treatment with RO systems is considered by most practitioners to be the preferred cost-effective technology for desalination and natural organic compound removal (colored groundwater, etc). Most of the earlier ocean desalination projects have been built outside of the United States and were primarily thermal distillation systems. Today, most of the newer plants use RO membrane technology. In addition, a newer membrane technology, MF, is also seeing increased application in surface water treatment and for pretreatment in ocean water desalination projects using open intakes for feedwater supply and RO for desalination.

To accommodate long-term population and economic growth in Southern California, and to protect against uncertainty and more extreme variability in natural water supply, as

well as development and depletion of water resources outside of Southern California, continuing regional and local efforts in water resource management and supply development will be necessary. Application of desalination technology is increasingly being recognized as one important supply component to develop new sustainable water supplies and to bolster water system reliability. Overall supply shortage risks from drought, regulatory constraints on existing supplies and emergency outages can be lessened with a diversified and disaggregated water supply portfolio that incorporates appropriate desalination projects. The different opportunities for desalinated water in MWDOC's service area are shown in Table 7-2.

In Orange County, there are three proposed ocean desalination projects that could serve MWDOC and its member agencies with additional water supply. These are the Huntington Beach Seawater Desalination Project, the South Orange Coastal Ocean Desalination Project, and the Camp Pendleton Seawater Desalination Project.

Table 7-2: Opportunities for Desalinated Water

Sources of Water	Check if Yes
Ocean Water	X
Brackish Ocean Water	X
Brackish Groundwater	X

7.4.1. Groundwater Desalination

Metropolitan instituted its Groundwater Recovery Program in 1991 to provide financial incentives (up to $250 per acre-foot) to local agencies to develop brackish groundwater impaired from either natural causes or from agricultural drainage. The purpose of the program was to increase utilization of groundwater storage within the region for firm local production, conjunctive use storage, and drought supply. In MWDOC's service area, five groundwater recovery brackish water projects have contracts with Metropolitan.

Mesa Colored Water Treatment Facility Expansion - The Colored Water Treatment Facility (CWTF) is owned and operated by Mesa Consolidated Water District (Mesa). The CWTF pumps colored water from a deep colored water aquifer and removes the color using ozone treatment and biological filtration. Due to the increase in color and bromide in the source water, Mesa has embarked on a project to replace the ozone and biological filtration treatment with nanofiltration membrane treatment and increase the capacity from 5.8 MGD to 8.6 MGD. Design and construction of the technology replacement and expansion began September 2009 and is anticipated to be completed April 2012.

SCWD Capistrano Beach Groundwater Recovery Facility Expansion - SCWD constructed a 1 MGD Groundwater Recovery Facility (GRF) that came on-line in FY 07-08 in Capistrano Beach. SCWD plans to expand the GRF with the addition of new wells. The SJBA is performing a study to evaluate the potential new well sites. SCWD will need to construct a second well in order to reach the permitted limit and construction of additional wells will be required to reach the proposed 2,000 AFY goal. Treating in excess of 1,300 AFY will require expansion of the GRF and agreement with San Juan Basin Authority or confirmation of water rights from the State Water Resources Control Board. The expansion is anticipated to begin in 2012 and completed by 2014.

Garden Grove Nitrate Blending Project - The Garden Grove Nitrate Blending Project was active during the years of 1990 to 2005. The project is located at the Lampson Reservoir site, where groundwater pumped from two wells is blended in order to meet the maximum contaminant level for nitrate. The blending project has been shut down since 2005, but the City is currently retrofitting Well 28 with a variable frequency drive and intends to reinstate the blending operation in 2012.

San Juan Desalter Groundwater Recovery Plant Expansion – The GWRP has been impacted by Methyl Tert-Butyl Ether (MTBE), cutting production in half to about 2 MGD or less since the spring of 2008. The installation of a Granular Activated Carbon Filter (GAC) is expected to allow the full 5.1 MGD by winter of 2011 and is expected to increase the treatment capacity expansion to 7 MGD by winter 2011 when the GWRP expansion and GAC systems are complete.

7.4.2. Ocean Water

Desalination of ocean water provides a potentially unlimited supply of water if it can be desalinated and delivered at competitive costs. This section addresses current proposals for developing a desalinated ocean water supply in Orange County.

In 2001, the Metropolitan Water District of Southern California developed a Seawater Desalination Program (SDP) to provide incentives for development of new seawater desalination projects in Metropolitan's service area. Under the SDP, Metropolitan provides incentives up to $250 per acre-foot for locally produced seawater desalination projects that reduce the need for imported supplies. To qualify for the incentive, proposed projects must replace an existing demand or prevent a new demand on Metropolitan's imported water supplies.

To date, there is one project, with a capacity of 56 TAF, within the Metropolitan service area that is currently under construction, which represents 37% of the 150 TAF desalination goal discussed in Metropolitan's 2004 Integrated Water Resources Plan (IRP) Update.

Given the increasing challenges associated with the delivery of water through San Francisco Bay/Sacramento-San Joaquin River Delta (Bay-Delta), State Water Project (SWP) supplies will remain as supplemental supplies for Southern California. Thus, any new local supply development that reduces the demand for imported supplies will result in a net reduction in SWP supplies or other supplies from Northern California.

The following projects, if developed, could result in a total net reduction in Metropolitan imported water deliveries to the Orange County.

Huntington Beach Seawater Desalination Project – Poseidon Resources (Surfside) LLC (Poseidon), a private company, is developing the Huntington Beach Seawater Desalination Project to be located adjacent to the AES Power Plant in the City of Huntington Beach along Pacific Coast Highway and Newland Street. The proposed project would produce up to 50 MGD (56,000 AFY) of drinking water and will distribute water to coastal and south Orange County to provide approximately 8% of Orange County's water supply needs. The project supplies would be distributed to participating agencies through a combination of (1) direct deliveries through facilities including the East Orange County Feeder #2 (EOCF #2), the City of Huntington Beach's distribution system, and the West Orange County Water Board Feeder #2 (WOCWBF #2), and (2) water supply exchanges with agencies with no direct connection to facilities associated with the Project.

Poseidon has received non-binding Letters of Intent (LOI) from MWDOC and 17 retail water agencies to purchase a total of approximately 72 MGD (88,000 AFY) of project supplies.

The Project has received specific approvals from the Huntington Beach City Council, including the Coastal Development Permit, Tentative Parcel Map, Subsequent Environmental Impact Report and Conditional Use Permit and water delivery pipeline Franchise Agreement, which collectively provided for the construction and long-term operation of the desalination facility. The Project also has an approved National Pollutant Discharge Elimination System Permit (NPDES) issued by the Santa Ana Regional Water Quality Control Board in 2006, an approved lease amendment from the California State Lands Commission (SLC) authorizing Poseidon to use existing offshore seawater intake and discharge facilities utilized by the Huntington Beach Generating Station, and a conditional approval from the Department of Public Health.

In addition to final water purchase agreements with the participating agencies, the Project still needs approval from the California Coastal Commission before Poseidon can commence construction of the desalination facility in Huntington Beach.

South Orange Coastal Ocean Desalination Project – MWDOC is proposing a desalination project in joint participation with the Laguna Beach County Water District,

Moulton Niguel Water District, City of San Clemente, City of San Juan Capistrano, South Coast Water District, and Metropolitan. The project is to be located adjacent to the San Juan Creek in Dana Point just east of the transition road from PCH to the I-5. The project will provide 15 MGD (16,000 AFY) of drinking water and will provide up to 25% of the potable water supply to the participating agencies.

Phase 1 included drilling 4 test borings and installing monitoring wells. Phase 2 consisted of drilling, constructing and pumping a test slant well. Phase 3 consists of constructing a Pilot Test Facility to collect and assess water quality. Phases 1 and 2 have been completed and Phase 3 commenced in June 2010 and will last 18 months.

If results are favorable after the Phase 3 testing, a full-scale project description and EIR will be developed. If EIR is adopted and necessary permits are approved, the project could be operational by 2017.

Camp Pendleton Seawater Desalination Project– San Diego County Water Authority (SDCWA) is studying a desalination project to be located at the southwest corner of Camp Pendleton Marine Corps Base adjacent to the Santa Margarita River. The initial project would be a 50 or 100 MGD plant with expansions in 50 MGD increments up to a max of 150 MGD making this the largest proposed desalination plant in the US.

The project is currently in the study feasibility stage and SDCWA is conducting geological surveys, intake options, and studies of the effect on ocean life and examining routes to bring desalination water to SDCWA's delivery system. MWDOC and south Orange County agencies are maintaining a potential interest in the project, but at this time they are only pursuing limited fact finding and monitoring of the project.

8. UWMP Adoption Process

8.1. Overview

Recognizing that close coordination among other relevant public agencies is the key to the success of its Plan, MWDOC also worked closely with many other entities to develop and update this planning document. These agencies include representation from diverse social, cultural, and economic elements of the population within MWDOC's service area to assist in preparation of its plan.

This section provides the information required in Article 3 of the Water Code related to adoption and implementation of the UWMP. Table 8-1 summarizes external coordination and outreach activities carried out by MWDOC and their corresponding dates. The UWMP checklist to confirm compliance with the Water Code is provided in Appendix D.

Table 8-1: External Coordination and Outreach

External Coordination and Outreach	Date	Reference
Developed Joint Contract for 22 agencies to get their UWMP's completed under a single contract		
SB-7 20x2020 Workshop		
Encouraged public involvement (Public Hearing)		Appendix G
Notified city or county within supplier's service area that water supplier is preparing an updated UWMP (at least 60 days prior to public hearing)	February 28, 2011	Appendix F
Held public hearing	May 18, 2011	Appendix H
Adopted UWMP	June 15, 2011	Appendix I
Submitted UWMP to DWR (no later than 30 days after adoption)	July 15, 2011	
Submitted UWMP to the California State Library and cities and county within the supplier's service area (no later than 30 days after adoption)	July 15, 2011	
Made UWMP available for public review (no later than 30 days after filing with DWR)	August 15, 2011	

This RUWMP was adopted by the Board of Directors on MONTH DAY, YEAR. A copy of the adopted resolution is provided in Appendix I.

8.2. Public Participation

MWDOC encouraged community and public interest involvement in the plan update through a public hearing and inspection of the draft document. Public hearing notifications were advertised via our normal methods by sending notices to our Member Agencies and other interested parties. Individual letters were also sent to potential stakeholders as to the development of our plan and public review hearing. A copy of the Notice of Public Hearing is included in Appendix G. The hearing provided an opportunity for all residents and employees in the service area to learn and ask questions about their water supply. Copies of the draft plan were made available for public inspection at MWDOC's office.

A Public Hearing for MWDOC's Draft Plan was held May 18, 2011. The hearing was conducted during a regularly scheduled meeting of the MWDOC Board of Directors at MWDOC's offices in Fountain Valley.

A staff report and presentation reviewed the information-gathering process, the data obtained from MWDOC member agencies and other resource planning agencies, and the conclusions that served as the basis of the Draft Plan. The President of the Board of Directors then opened the Public Hearing where all comments were recorded in their entirety.

8.3. Agency Coordination

Recognizing that close coordination among other relevant public agencies is the key to the success of its Plan, MWDOC worked closely with many other entities to develop and update this planning document. MWDOC's coordinated efforts with the relevant agencies are summarized in Table 8-2.

Table 8-2: Coordination with Appropriate Agencies

	Participated in Plan Development	Commented on Draft	Attended Public Meetings	Contacted for Assistance	Sent Copy of Draft Plan	Sent Notice of Public Hearing	Not Involved/No Information
MWDOC 28 Member Agencies	√	√	√	√	√	√	√
Cities within MWDOC service area			√		√	√	√
County of Orange			√		√	√	√
Orange County Water District	√			√	√	√	√
San Juan Basin Authority	√			√	√		
Metropolitan Water District of Southern California	√			√	√	√	√
Orange County Sanitation District	√			√	√		
South Orange County Wastewater Authority	√			√	√		
Public Library					√	√	
General Public					√	√	

MWDOC Member Agencies - MWDOC worked cooperatively with its 28 member agencies on descriptions of any planned development of local supplies. Methodologies and assumptions underlying these projections vary from agency to agency, but all projections reflect an in-depth knowledge of the individual agencies' service areas.

Cities and County - As described earlier, General Plans are source documents for water suppliers as they assess their own water resource needs. When completed, an UWMP also serves as a source document for cities and counties as they prepare their General Plans. General Plans and UWMPs may be linked, as their accuracy and usefulness are interdependent.

California Water Code Section 10621(b) requires urban water suppliers to notify cities and counties in their service area of the opportunity to submit comments during the UWMP update process. A change from the 2004 legislative session to the 2009 legislative session required MWDOC to notify any city or county within its service area at least 60 days prior to the public hearing. A Letter of Notification was sent to the County of Orange and all cities within the MWDOC service area on February 28, 2011 to inform that MWDOC is in the process of preparing an updated UWMP (Appendix F).

Groundwater Management Agencies - MWDOC also worked with the following five agencies to obtain information for the five groundwater basin resources in its service area: OCWD for Lower Santa Ana River Basin, SJBA for San Juan Basin, City of La Habra for La Habra Basin, City of San Clemente for San Mateo Basin, and LBCWD for Laguna Canyon Basin. Details of the basin information are described in Section 2.2.1.

Metropolitan Water District of Southern California - As a member agency of Metropolitan, MWDOC participated in workshops hosted by Metropolitan to facilitate the information exchange for the development of this Plan.

MWDOC also worked with Metropolitan staff to develop demand projections using data from SCAG.

Wastewater Management Agencies - To meet the requirements of the Act in the preparation of this Plan, MWDOC contacted individual wastewater collection and treatment providers and other water agencies within MWDOC's service area for data on recycled water and associated projects in the region. The information MWDOC obtained was then combined with a review of several completed Orange County studies. MWDOC also reviewed operating information and interviewed staff from individual agencies. The information MWDOC obtained from wastewater collection and treatment providers allows the Plan to describe wastewater disposal methods, treatment levels, discharge volumes, and recycled use in the region.

8.4. UWMP Submittal

8.4.1. Review of Implementation of 2005 UWMP

As required by California Water Code, MWDOC summarizes the implementation of the Water Conservation and Water Recycling Programs to date, and compares the implementation to those as planned in its 2005 UWMP.

Comparison of 2005 Planned Water Conservation Programs with 2010 Actual Programs

As a wholesaler, MWDOC did not contain a specific implementation plan its 2005 UWMP. However, as a signatory to the MOU regarding urban water use efficiency, MWDOC's commitment to implement BMP-based water use efficiency program continues today. For MWDOC's specific achievements in the area of conservation, please see Section 4 of this Plan.

Comparison of 2005 Projected Recycled Water Use with 2010 Actual Use

Current recycled water projections for 2010 for MWDOC's service area are about 25% less than previously forecasted for 2010 in the 2005 UWMP, as illustrated in Table 6-6.

8.4.2. Adoption and Filing of 2010 UWMP

Members of the Board of Directors reviewed the Final Draft Plan in June 2011 at the Planning and Operations Committee meeting. The Committee recommended that the Board of Directors approve the 2010 RUWMP at its June 15, 2011 meeting. The seven-member MWDOC Board of Directors approved the 2010 RUWMP at its DATE meeting. See Appendix I for the resolution approving the Plan.

By August 1, 2011, the Adopted 2010 MWDOC RUWMP was filed with DWR, California State Library, County of Orange, and cities within MWDOC's service area.

Long Range Finance Plan 2010 Update

Rate Issues

October 4, 2010

Agenda

- Rate issues
  - Treated Water Peaking Charge
  - Growth Charge
  - Purchase Order
- Moving Forward

LRFP Rate Structure Workgroup

- Prior LRFP Rates Workgroup presentations are posted on MWD website
- Meetings during 2007-2008 used a structured process:
  - Background
  - Analysis
  - Impacts
  - Options-decisions
- Inform Board
- Unanimous consent not required; alternative views and perspectives adequately described and presented

Outstanding Rates Issues

- Treated Water Fixed Cost Recovery
  - Several workshops discussed the options regarding fixed costs and cost recovery
  - Possible outcomes:
    - "do nothing"
    - Recommend set of options or one option to the Board

Outstanding Rates Issues (cont'd)

- Growth-related Infrastructure cost recovery
  - Workshops on options, identification and ranking of criteria
  - White Paper discussing options and criteria
  - Possible outcomes:
    - "do nothing"
    - Recommend set of options or one option to the Board
- Purchase Order commitment

Treatment Cost Recovery

Water Treatment Plant Usage and Peaking

Calendar Year 2008 through Sep.27, 2010

Facility	Design Capacity (cfs)	Average Demand (cfs)	Peak Day average flow (cfs)	Capacity Factor	Peaking Factor
Diemer	803	421	779	52%	1.85
Jensen	1163	327	1,136	28%	3.47
Mills	505	106	283	21%	2.67
Skinner	930	291	840	31%	2.89
Weymouth	803	367	680	46%	1.85
Total	4,204				

Treatment Cost Drivers

- Major Treatment Capital Investments (e.g. ozone retrofit)
- Rising O&M costs
  - Chemicals
  - Electric Power

Treatment Peaks and Rate Equity

- Infrastructure must be designed to meet peak demand.
- Relying on MWD for peaking/standby capacity drives capital costs higher.
- Current rate structure recovers peaking costs uniformly through a volumetric charge paid by all member agencies.

Features of the Current Treatment Surcharge in 2011

- Uniform rate
- $217/AF Full Service, $205 /AF Agricultural, $192/AF Replenishment
- Constant charge throughout the year (peaking cost impact not assessed)
- Treatment cost classifications*
  - Fixed Demand $66.2M
  - Fixed Commodity $153.2M
  - Variable Commodity $31.5M

*FY2010/11 budget

Recovery of Treatment Costs

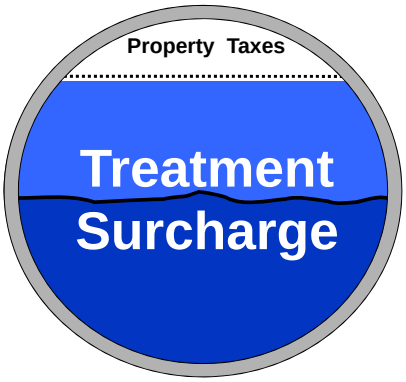

Offset to Costs

Peak Demand Costs

Average Demand Costs

Treated Water Cost Recovery Considerations

- Infrastructure must be built to accommodate peak demand.
- Higher peaks result in higher costs.
- These costs are currently shared by all users uniformly.
- Each user contributes differently to system peaks.
- A peaking/standby charge could impact monthly and seasonal bills.
- Equity principle implies that each member agency should pay costs of service.
- Charges should encourage more efficient use of system treatment resources.

Option 1: Treated Water Capacity Charge

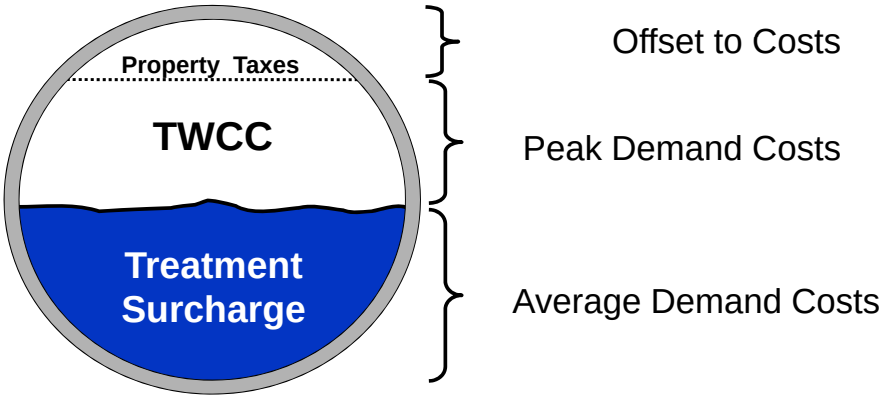

TWCC Design

- Review historical usage patterns for each user.
- Determine three-year summer season peak day use.
- Calculate costs related to serving peak/standby demand.
- Develop a fixed capacity charge that will recover peaking/standby costs.
- Estimate the impact of new charges on member agencies.
- Phase in new charges as appropriate.

TWCC Design

- Revenue neutral for Metropolitan – does not result in additional revenues
- Based on a three-year trailing maximum peak day treated flow
- Calculated with a one-year lag to allow for certifications
- Volumetric Treatment Surcharge adjusted for reduced revenue requirement

TWCC Advantages/Disadvantages

Advantages

- Patterned after the existing capacity charge.
- Better revenue stability to Metropolitan and cost predictability to Member Agencies.
- More equitably allocates costs of service.
- Sends a strong signal to manage peaks.
- No change to bundled/unbundled rate structure

Disadvantages

- Total treatment charge not influenced as strongly by short-term changes in demand.
- Substantial rate impacts on some member agencies.
- Agency concerns regarding 3-year look back.

Option 2: Treated Water Peaking Charge

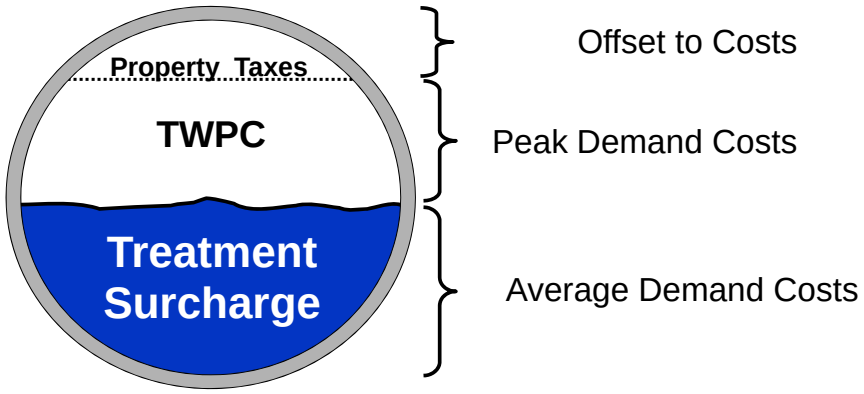

Treated Water Peaking Charge Design

- Calculate costs related to serving peak/standby demand.
- Establish baseline for each Member Agency and calculate over-baseline amounts.
- Calculate system-wide volume rates for both average demand usage and peaking charge for peak demand usage.
- Estimate the impact of new charges on member agencies.
- Phase in new charges as appropriate.

TWPC Design

- Revenue neutral for Metropolitan – does not result in additional revenues
- Baseline calculation includes Basic, Agricultural, and CUP sales
  - Does not include Replenishment or Supplemental Storage Program
  - Based on three-year trailing average winter use
- Calculated with a one-year lag to allow for certifications
- Over Baseline calculated for May through September timeframe

Peaking Charge Advantages and Disadvantages

Advantages

- Sends a signal to manage summer peaks
- Only applies to the extent that members exceed baseline
- More equitably allocates costs of service

Disadvantages

- Substantial rate impacts on some member agencies
- More volatility to revenues
- Seasonality to Treatment Surcharge
- Affects some bundled rate structures

Treated Water Fixed Cost Recovery

MWD rate principles	Existing structure	Peaking Charge	TWCC
Fairness (equitable)	0	+	+
Provide stable revenues adequate to cover costs	0	0	+
Provides certainty and predictability	0	0	+
Provides a level economic playing field	0	+	+
Reasonably simple, understandable rate structure	+	+	+

Rating Key

0 Meets requirements

+ Exceeds requirements

- Does not meet requirements

Treated Water Fixed Cost Recovery (cont'd)

Other possible rate principles	Existing structure	Peaking Charge	TWCC
Treatment system reliability	0	+	+
Efficiency	-	+	+
Environmental stewardship	0	+	+
Defensibility	0	+	+
Consistent with industry practice and guidelines	0	0	0

Rating Key

0 Meets requirements

+ Exceeds requirements

- Does not meet requirements

Issues

- How to most appropriately allocate and recover fixed costs of treatment facilities
  - Volumetric recovery of all costs subsidizes intermittent use of capacity, particularly during summer season
  - Capacity of treatment plants "standing by" is not recovered through a fixed charge, like the RTS

Growth Cost Recovery

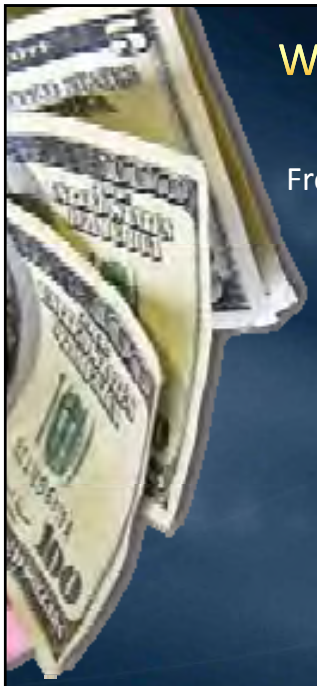

Why Consider a Growth Charge?

From October 16, 2001 Board Letter p.3

"Addressing New Demands. The Proposal addresses the impact of new demands on the cost of water supply through the tiered rate structure. Agencies that have increasing demands on Metropolitan would pay more, since they would purchase a greater share of the water sold at the higher Tier 2 rate. **In addition, the Proposal provides that a mechanism to recover costs for Metropolitan's infrastructure associated with increasing system demands will be developed and in place by 2006."** (Emphasis added)

Background

- 1993 – Board approved rate structure including New Demand Charge (NDC)
  - NDC authorized in FY1995-96
  - Assessed if the Agency's current four-year water sales average exceeded an established baseline
  - The first Member Agency to pay would have done so due solely to reduction in it's groundwater supplies; not due to an increase in total demand

Growth Charge evaluation criteria

Encourages Local Stewardship	Local agencies meet needs with local resources and infrastructure to the greatest extent possible
Local Agency Choice	Each agency has a choice in how it recovers the cost of growth-related infrastructure
Rate Equity and Price Signal	Allocate a proportionate share of additional costs to those agencies requiring additional system capacity
Metropolitan Administrative Burden	No excess burden on Metropolitan Staff
Member Agency Administrative Burden	No excess burden on Member Agency Staff
Legal Authority	Metropolitan should have the legal authority to assess the growth-related cost recovery mechanism
Cost of the Fee	Cost should not be less economical to the Member Agencies than if the Member Agency constructed the facilities needed to provide additional capacity itself
Ease of Update	Simple, predictable and not overly complicated to update
Public Understanding	Easily understood by Member Agencies, retail agencies and the public

Growth Charge evaluation criteria (cont'd)

Revenue Stability	Should not create more instability in Metropolitan's revenue stream and should help produce predictable rates for Member Agencies
Consistent with Metropolitan Philosophy	Consistent with prior principles, such as being a regional provider and encouraging projects that have regional benefits

Issues

- What is growth?
  - CIP drivers are Supply & Delivery Reliability, Infrastructure Reliability, Water Quality, Cost/Efficiency/Productivity, Stewardship,
- What is the nexus?
- How to collect?

Growth Related Cost Recovery Options

1. Status Quo
2. Negotiated Contracts
3. New Water Demands
4. Connection Fee Assessed at the Member Agency
5. Connection Fee Assessed at the Retail Level

Evaluation of Options

CRITERION	Status Quo	Negotiated Contracts	New Water Demands	Connection Fee Assessed at the Member Agency	Connection Fee Assessed at the Retail Level
Encourages Local Stewardship	+	+	+	--	--
Local Agency Choice	--	+	--	+	--
Rate Equity and Price Signal	--	+	+	+	+
Metropolitan Administrative Burden	+	--	+	--	--
Member Agency Administrative Burden	+	--	+	+	--
Ease of Update	+	--	+	+	+
Legal Authority	+	?	?	?	--
Public Understanding	+	?	--	+	+
Consistent with Metropolitan Philosophy	+	--	+	+	+
Revenue Stability	+	+	--	--	--

Purchase Order Commitment

- Commitment to cover Metropolitan's fixed costs while protecting regional reliability for all
  - Voluntary
  - Offered price incentives to member agencies by increasing the volume of water purchased at the lower-priced Tier 1 supply rate
  - Level of financial commitment to Metropolitan
  - Not tied to reliability

Purchase Order Commitment

- Existing purchase order expires Dec. 2012
  - Ten year term 2003-2012
  - Initial Base Demand is maximum firm demand, FY89/90 through FY01/02
  - PO commitment is 10 years x 60% x IBD
  - Base Firm Demand = Max (IBD, Ten-Year Rolling Average Firm Demands)
  - Tier 1 limit is 90% of BFD with PO, or 60% without
  - 1.95 MAF total member agency Tier 1 limit

Purchase Order Structure

- PO Commitments provided that member agencies are to inform Metropolitan by Dec.31, 2010 if they want to submit a new purchase order
- Current process to address

Purchase Order Structure

- If no PO Commitment, how does Metropolitan structure the Tier 1 limit?
  - Current Tier 2 price is based on the cost of transfers
  - In 2009, 84 TAF of Tier 2 sales
- If retain Purchase Orders, what should the structure be?
  - Status Quo
  - Limit aligned with WSAP 2004-2006 adjusted average retail demand
  - Recovery of Metropolitan's fixed costs in Tier 1

Discussion

Starr Ranch Sanctuary
Habitat Restoration

Goal
At Starr Ranch, Audubon California protects and restores the last remaining wild habitats of Orange County. Starr Ranch serves as a regional model for groundbreaking non-chemical methods of restoration enacted by both community volunteers and highly qualified field crews. Our goal is to actively restore 1,600 acres of degraded habitat, representing approximately 40% of Starr Ranch's total acreage, by 2020.

About Starr Ranch
Starr Ranch is a 4,000-acre Audubon Sanctuary in Southern California's highly suburbanized Orange County. All native habitats and wildlife are becoming rare in California, and the Ranch protects some especially endangered vegetation types such as coastal sage scrub, needlegrass grassland, and riparian woodland as well as species such as the federally threatened California Gnatcatcher (a songbird) and orange-throated whiptail (a lizard). The Southern Californian wild landscape has been subjected to development, repeated fire, and now faces the uncertain impacts of climate change. Additionally, invasive plants damage habitats across all of California's native landscapes. After invasive species control, restoration of native habitat is the second essential step towards bringing back the remarkable wild Mediterranean-climate landscapes of Southern California.

Starr Ranch protects some of the last pristine (i.e. undeveloped and unburned since 1980) wild landscapes in Orange County, and the management of these critical habitats begins with abating the threat of invasive species. At Starr Ranch, we take an innovative approach to invasive species control and rare habitat restoration that is both research-based and done completely without the use of toxic herbicides. Our goal is to serve as a model for the southern Californian region of a rigorous, sustainable approach to land management. Starr Ranch's restoration work has received state and national recognition and is praised as "unique and cutting edge" by the U.S. Fish and Wildlife Service. Our restoration work focuses on three rare California native habitats on Starr Ranch: coastal sage scrub, needlegrass grassland and creek-side habitat (known as riparian habitat.) As of 2011, a total of 485 acres are under active management.

Coastal Sage Scrub Project
Coastal sage scrub (CSS) restoration at Starr Ranch began in 2001 using unique methods that were developed onsite by Audubon staff and are now used by other preserves and parks throughout Southern California. Restoration sites follow a documented trajectory of invasive species control, native planting, and establishment with follow-up treatments until they reach a functional state close to a natural system. The field crew that works in the uplands uses physical methods to control targeted invasive plants in project sites. We use experiments to develop and refine restoration techniques. Currently 172 acres of coastal sage scrub are being restored of the 485 total upland invasive control acres the crew covers, and 15-30 acres will be added each year until the ultimate goal of 250 acres is reached.

Needlegrass Grassland Project
In 1999, Starr Ranch initiated a carefully designed, experiment-driven, non-chemical removal of a high priority invasive species, artichoke thistle, in 270 acres of our best needlegrass grasslands out of a total 700 acres of infested sites on the Ranch. After only one year of treatment, thistle

populations are reduced by 95%. Native grassland enhancement will eventually occur in 450 acres of the 700. As of 2011, the Starr Ranch field crew is controlling invasive species and testing methods of enhancing existing native grasses in 298 acres of needlegrass grassland. The last remaining native grasslands are slated for invasive control and enhancement during the 2013-14 season.

Riparian Project

Creek-side habitat – known as a riparian zone – is the vegetation along a stream or river. The Starr Ranch riparian restoration project has been ongoing since 2003. Two seasonal interns mapped invasive plants during the first years of the project and now recruit community volunteers for the Weed Warriors program. In 2007, the Ranch began a cooperative riparian invasive control project with the Orange County Conservation Corps (OCCC), who serve at risk young adults, to remove invasive plants along Bell Creek, a riparian corridor that is almost 5 miles long. As of 2011, interns and Weed Warrior volunteers worked in a total of 4.4 acres of an 11 acre intensive management area that outlines the extent of a high priority invasive species (periwinkle) along the main riparian corridor of Bell Creek. Riparian work acreages are relatively low since only two interns and volunteers do most of the work, using hand tools for safety. We add about 0.5 – 2.0 new invasive control acres per season, and monitor and restore in all work acreage. Interns walk the Bell Canyon riparian corridor (232 acres), each season to map and control rapidly spreading invasive plants. It is our expectation that we will eventually add Crow Canyon to this project, a second major riparian zone representing 129 acres for which we have completed the mapping of invasive plants. Projection for riparian project completion is less certain than in uplands since annual numbers of volunteers and OCCC crew funding are highly variable. Additionally, degraded (i.e. dominated by invasive species) stream banks are much less discrete and measurable than are the upland sites that occur in patchy mosaics. Generally, we hope to have most degraded stream banks with priority invasives under control by 2020.

Summary of Long-term Project Goals

In total, it is our goal to actively restore 1,600 acres, representing approximately 40% of Starr Ranch's total acreage. At our current rate, we can expect to reach this goal by 2020.

Needs

To achieve our restoration goals, Starr Ranch is dependent on the seven young temporary staff, recent college graduates, hired each season. Since the staff lives in historic Ranch buildings, salaries can be kept relatively low, totaling $82,000 per year (CSS restoration in southern California can cost $60,000-120,000 per acre). Annual costs over the next five years will remain stable since older restoration sites require less staff time. With additional support services charges, the current annual budget for restoration, including equipment and supplies, is $145,465. Restoration is an ongoing, long term process. The threat of new invasive species, repeated fire, and climate change require continual and persistent management and monitoring, in an approach advocated by the Ecological Society of America. To maintain rare habitat work at Starr Ranch in such a manner would require $727,325 over the next five years.

Summary of Long-term Project Goals

Riparian – 361 acres *
Needlegrass grassland – 450 acres
Coastal Sage Scrub – 250 acres

Total of 1,601 acres

* Note: these total acreages for riparian based on GIS estimates of creek area. Using a standardized definition of riparian (100 feet from creek center line onto both banks), Bell Creek was estimated at 125 acres and Crow Creek at 84 acres.

From: Ingrid Chlup [ichlup@wetlandpermitting.com]
Sent: Tuesday, January 12, 2010 10:38 AM
To: DESIMONE, Sandy
Subject: RE: Starr Ranch Costs

FYI - The minimum unit available from the Riverside County Mitigation Bank was actually 0.5 acre ($21,000). I believe that the cost for them to implement and monitor the mitigation themselves is also in that range. Hope that helps.

From: Sandy DeSimone [mailto:sdesimone@audubon.org]
Sent: Monday, January 11, 2010 4:13 PM
To: ichlup@wetlandpermitting.com
Subject: RE: Starr Ranch Costs

Thanks!

Sandy DeSimone, Ph.D.
Director - Research and Education
Starr Ranch Sanctuary
Audubon California
100 Bell Canyon Road
Trabuco Canyon, CA 92679
Phone: 949-858-0309
Fax: 949-858-1013
www.starr-ranch.org

From: Ingrid Chlup [mailto:ichlup@wetlandpermitting.com]
Sent: Monday, January 11, 2010 4:10 PM
To: DESIMONE, Sandy
Subject: RE: Starr Ranch Costs

Hi Again Sandy,

Although not necessarily required for the Del Obispo mitigation, I thought you might find a sample of a more detailed Habitat Mitigation and Monitoring Plan useful for future endeavors. Again, please feel free to call if you have any questions.

Ingrid Chlup
Regulatory Specialist/Biologist
Glenn Lukos Associates
(949) 837-0404 ext 35

From: Sandy DeSimone [mailto:sdesimone@audubon.org]
Sent: Saturday, January 09, 2010 9:54 AM
To: 'Nisha Patel'

Cc: 'DeSIMONE, Pete'; 'Ingrid Chlup'; 'Bill Ramsey'
Subject: RE: Starr Ranch Costs

OK! We figure that 0.03 acres is about an 11 X 11 meter area.

Sandy DeSimone, Ph.D.
Director - Research and Education
Starr Ranch Sanctuary
Audubon California
100 Bell Canyon Road
Trabuco Canyon, CA 92679
Phone: 949-858-0309
Fax: 949-858-1013
www.starr-ranch.org

From: Nisha Patel [mailto:NPatel@sanjuancapistrano.org]
Sent: Saturday, January 09, 2010 9:48 AM
To: DESIMONE, Sandy
Cc: DeSIMONE, Pete; Ingrid Chlup; Bill Ramsey
Subject: RE: Starr Ranch Costs

Sandy,

Yes, you would be within the nine month time frame, and so we would be okay.

Thanks,

Nisha A. Patel

From: Sandy DeSimone [mailto:sdesimone@audubon.org]
Sent: Saturday, January 09, 2010 9:41 AM
To: Nisha Patel
Cc: 'DeSIMONE, Pete'; 'Ingrid Chlup'; Bill Ramsey
Subject: RE: Starr Ranch Costs

Yes. Our seasonal interns and field crew will be gone during summer so if we don't get it done while our two riparian interns are here (by their last volunteer day on May 22, so they have some help), we'll have to wait until November. Assume that's ok since it's within the nine month period previously mentioned. Sandy

----
Sandy DeSimone, Ph.D.
Director - Research and Education
Starr Ranch Sanctuary
Audubon California
100 Bell Canyon Road
Trabuco Canyon, CA 92679
Phone: 949-858-0309
Fax: 949-858-1013
www.starr-ranch.org

From: Nisha Patel [mailto:NPatel@sanjuancapistrano.org]

Sent: Saturday, January 09, 2010 8:57 AM
To: DESIMONE, Sandy
Cc: DeSIMONE, Pete; Ingrid Chlup; Bill Ramsey
Subject: RE: Starr Ranch Costs

Sandy,

I will find out if any extra reporting is required. Will you do the work even if there isn't any extra paper work? If not, I will have to ask the Water Board to change the language on the certification to not specify a certain ranch or conservation area to use.

Thank you,

Nisha A. Patel

From: Sandy DeSimone [mailto:sdesimone@audubon.org]
Sent: Friday, January 08, 2010 1:35 PM
To: Nisha Patel
Cc: 'DeSIMONE, Pete'
Subject: Starr Ranch Costs

Hi Nisha,

Though we're still working on calculating costs for riparian work at Starr Ranch, below is a first effort:

To date, our interns and volunteers have spent 362 total person hours working in about 1.06 acres of Bell Creek. If we apply the rate we use to calculate upland work ($20/hour), then the cost for the 10.25 total person hours it would take to do 0.03 acres would be $205.

If this mitigation requires additional paper work or puts extra work on our staff, then it wouldn't be worth it for us. If we can do the work while our riparian interns are here, then we can do the mitigation work. Their last Weed Warrior volunteer day is May 22.

Thanks.
Sandy

Sandy DeSimone, Ph.D.
Director - Research and Education
Starr Ranch Sanctuary
Audubon California
100 Bell Canyon Road
Trabuco Canyon, CA 92679
Phone: 949-858-0309
Fax: 949-858-1013
www.starr-ranch.org

Starr Ranch Field Ecology Programs

Study Wildlife With Biologists

…field ecology is a branch of biology that focuses on the outdoor study of the relationships among animals, plants and their environment.

Experience nature hands-on with biologists during outdoor simulations of research on wild animals and their habitats at 4000-acre Starr Ranch, an Audubon Sanctuary in southeast Orange County.

Participants learn fascinating facts about animals and plants and how biologists use the scientific method to study wildlife. Choose one or more 1-2 hour field ecology programs (examples below) or nature walks. Instructors are field ecologists with graduate degrees. Minimum group size 15 (exceptions by special arrangement), maximum 150. We will create or modify programs to suit your home school needs. Some of our programs include:

BIRDS

Songbird Monitoring: Catch and Release
Hawk Research
Evening Owl Survey

STREAM ECOLOGY

Stream Biosurvey (aquatic insects)
Stream Water Chemistry
Stream Ecology

PLANTS

Weed Control and Native Habitat Restoration
Plant Communities of Starr Ranch
Native Plant/Wildflower Walks

OTHER WILDLIFE

Cougars, Bobcats, and Coyotes!
Invertebrate Research
Reptiles and Amphibians

FEES	PER PERSON
Nature Walks	$8 & $10
Half day, 1-2 ecology programs	$10
Full day, 3-4 ecology programs	$15
Overnight in conjunction with programs:	
Tent camping	$5/night

Dates and times by arrangement.

Call Sandy or Scott at: 949-858-0309

www.starr-ranch.org

Program descriptions at www.starrranch.org/srfep_description.htm

Audubon CALIFORNIA

April 2010

Baker Water Treatment Plant
Preliminary Design Report

Prepared for:
Irvine Ranch Water District
PR 11218

Prepared by:
RBF CONSULTING
carollo

Table of Contents

Section **Page**

Executive Summary ES–1
General ES–1
Introduction and Background ES–1
Project Overview ES–2
Raw Water Conveyance System ES–3
Treatment System ES–3
Chlorine Dioxide Pre-Treatment ES–9
Forebay and Feed Water Pump Station ES–9
Strainer / Flash Mix System ES–10
Pressurized Membrane Filtration (PMF) ES–10
Backwash Waste Water System ES–11
UV Disinfection ES–12
Contact (CT) Basin ES–13
Product Water Delivery System ES–13
Baker Site ES–14
Economic Evaluation ES–19
Capital Cost ES–19
Operation and Maintenance Cost ES–19
Annualized Cost Estimates ES–19
Economic Evaluation Results ES–23
Schedule ES–24

Section 1 Introduction 1–1
1.1 Project Objectives 1–1
1.2 Project Background 1–1
1.3 Project Stakeholders 1–2
1.4 Baker WTP Capacity Allocations / Existing Facilities Capacity Rights 1–2
1.5 Project Concept Development 1–3
1.5.1 Feasibility Study 1–3
1.5.2 Pilot Testing 1–4
1.5.3 Technical Memorandum 1–4
1.5.4 Baker Pipeline Flow Test 1–4
1.5.5 Preliminary Design Memoranda 1–4
1.5.6 Historical Overview 1–7
1.6 Summary of Project 1–8
1.6.1 Raw Water 1–8
1.6.1.1 Sources 1–8
1.6.1.2 Conveyance System 1–11
1.6.2 Operation 1–11
1.6.3 Treatment Process 1–12
1.6.3.1 Pre-Treatment 1–12
1.6.3.2 Membrane Filtration 1–12

1.6.3.3 UV Disinfection 1–12
1.6.3.4 Chloramination Disinfection 1–12
1.6.3.5 Backwash Waste Water Treatment / Recovery 1–12
1.6.4 Product Water Delivery 1–13
1.6.4.1 Clearwell 1–13
1.6.4.2 Gravity Delivery 1–13
1.6.4.3 Product Water Pump Station 1–13
1.6.4.4 Allen McColloch Pipeline 1–13
1.7 Preliminary Design Report Objectives 1–14

Section 2 Source Water, Regulations and Treatment Objectives 2–1
2.1 Overview 2–1
2.2 Raw Water Sources 2–1
2.2.1 Metropolitan Water District (Santiago Lateral) 2–1
2.2.2 Irvine Lake Water (ILW) 2–5
2.2.3 Lake Forest Well No. 1 2–5
2.3 Anticipated Raw Water Quality 2–6
2.4 Current and Anticipated Regulatory Requirements 2–8
2.4.1 California Department of Public Health (CDPH) 2–8
2.4.2 Long Term 2 Surface Water Treatment Rule 2–9
2.4.3 Disinfection By-Products 2–10
2.4.4 Potential (Future) Treatment Goals 2–11
2.4.5 Other Dedicated Treatment Requirements 2–11
2.5 Treatment Objectives 2–11
2.6 Product Water Quality Goals 2–12
2.6.1 Turbidity 2–12
2.6.2 Iron and Manganese 2–12
2.6.3 Chlorine Dioxide 2–12
2.6.4 Chlorite 2–13
2.6.5 Disinfection Byproducts 2–13
2.6.6 Total Chlorine 2–13

Section 3 Raw and Product Water Conveyance Hydraulics 3–1
3.1 Overview 3–1
3.2 MWD System 3–1
3.2.1 Santiago Lateral 3–1
3.2.2 OC-33 3–7
3.3 Existing Raw Water Conveyance Facilities 3–7
3.3.1 Baker Pipeline 3–7
3.3.1.1 Hydraulics 3–7
3.3.1.2 Flow Test 3–8
3.3.1.3 Flow Test Analysis 3–8
3.3.1.4 Capacity Rights 3–8
3.3.2 Irvine Lake 3–11
3.3.3 Irvine Lake Pipeline 3–12
3.4 Proposed Raw Water Conveyance Facilities 3–15
3.4.1 Alternative Facilities Considered 3–15
3.4.2 Proposed Facilities 3–16

3.5 Raw Water System Operation 3–16
3.5.1 Gravity Conveyance....3–25
3.5.2 Pumping Conveyance....3–31
3.6 Treatment....3–35
3.7 Product Water System....3–35
3.7.1 Clearwell....3–35
3.7.2 Product Water Pump Station....3–35
3.7.3 Allen McColloch Pipeline....3–35
3.8 Product Water System Operation....3–36
3.9 Hydraulics....3–36

Section 4 OC-33 Turnout....4–1
4.1 Overview....4–1
4.2 Capacity....4–1
4.2.1 Prior Capacity....4–1
4.2.2 Current Capacity....4–1
4.2.3 Future Capacity....4–1
4.3 Modification....4–2

Section 5 Raw Water Pump Station....5–1
5.1 Overview....5–1
5.2 Capacity....5–1
5.3 Hydraulics....5–2
5.4 Site Development....5–5
5.4.1 Site Access....5–6
5.4.2 Demolition....5–6
5.4.2.1 Description....5–6
5.4.2.2 Hazardous Materials....5–6
5.4.3 Earthwork....5–7
5.4.4 Drainage....5–7
5.5 Design Criteria....5–7
5.5.1 Pump....5–7
5.5.2 Surge....5–7
5.5.3 Mechanical....5–8
5.5.4 Structural....5–9
5.5.5 Geotechnical....5–9
5.5.6 Operation....5–9

Section 6 Trabuco Canyon Water District Pump Station....6–1
6.1 Background....6–1
6.2 Pump Station....6–1
6.3 Capacity....6–1
6.4 Hydraulics / Operation....6–2
6.5 Design Criteria....6–2

Section 7 Flow Control Facility....7–1
7.1 Overview....7–1
7.2 Hydraulics and Operation....7–1

7.3 Site Improvements 7–11
7.4 Acceptable Design Limits 7–12
7.5 Design Criteria 7–12

Section 8 Iron and Manganese Management 8–1
8.1 Overview 8–1
8.2 Objectives 8–2
8.3 Oxidation 8–2
8.4 Bench Testing 8–3
8.5 Oxidant Generation 8–3
8.6 Oxidant Pacing Method 8–4
8.7 Oxidant Residual Control 8–5
8.8 Oxidant Monitoring 8–7
8.9 Design Criteria 8–8

Section 9 Forebay 9–1
9.1 Introduction 9–1
9.1.1 Capacity 9–1
9.1.2 Hydraulics 9–2
9.2 Forebay Construction 9–2
9.2.1 Covers 9–3
9.2.2 Access 9–3
9.2.3 Earthwork 9–3
9.2.4 Drainage 9–3
9.3 Maintenance 9–4
9.4 Design Criteria 9–4

Section 10 Feed Water Pump Station 10–1
10.1 Introduction 10–1
10.1.1 Capacity 10–1
10.1.2 Hydraulics 10–2
10.1.3 Operation 10–5
10.2 Design Criteria 10–6
10.2.1 Structural 10–7
10.2.2 Pump 10–7
10.2.3 Mechanical 10–7
10.2.3.1 Piping 10–7
10.2.3.2 Mechanical Design Criteria 10–8
10.2.3.3 Metering 10–8

Section 11 Strainer/Flash Mix System 11–1
11.1 Overview 11–1
11.2 Feedwater Strainers 11–1
11.3 In-Line Coagulation 11–2
11.3.1 Coagulation Selection 11–2
11.3.2 Flash Mixing 11–3
11.4 Design Criteria 11–4
11.4.1 Feedwater Strainer 11–4

11.4.2 Flash Mix System....11–5

Section 12 Treatment Process....12–1
12.1 Overview....12–1
12.2 Treatment Process Alternatives....12–1
12.3 Process Selection....12–1
12.4 Process Refinements....12–2
12.4.1 Forebay....12–2
12.4.2 Taste and Odor Control....12–2
12.5 Process Flow Diagram....12–5
12.5.1 Primary Treatment Process Flow....12–5
12.5.2 Waste Washwater Recovery....12–6
12.6 Treatment Process....12–6
12.6.1 Description....12–6
12.6.2 Manufacturers....12–11
12.6.3 Procurement....12–11
12.7 Membrane Filtration System Design Criteria....12–12
12.8 Treatment Building....12–13

Section 13 Chemical Storage and Feed Systems....13–1
13.1 Overview....13–1
13.2 Chemical Requirements....13–1
13.3 Chemical System Design Criteria....13–2
13.3.1 Chemical System Sizing Criteria....13–2
13.3.2 Piping and Tank Materials....13–2
13.4 Design Criteria by Chemical....13–5
13.4.1 Primary Coagulant....13–5
13.4.2 Sodium Hydroxide....13–6
13.4.3 Citric Acid....13–7
13.4.4 Sodium Bisulfite....13–8
13.4.5 Sodium Hypochlorite....13–9
13.4.6 Aqua Ammonia....13–11
13.4.7 Chlorine Dioxide....13–11
13.5 Chemical Storage Building....13–13

Section 14 Backwash Waste Water System....14–1
14.1 Overview....14–1
14.1.1 Water Quality....14–1
14.1.2 Treatment Alternatives....14–2
14.1.3 Treatment Process Selection....14–4
14.1.4 Recovery....14–5
14.1.5 Sludge Disposal....14–5
14.2 Backwash Water Design Criteria....14–5
14.2.1 Process....14–5
14.2.2 Mechanical....14–5
14.2.2.1 Piping....14–5
14.2.2.2 Valves....14–5
14.2.2.3 Metering....14–6

14.2.2.4 Coagulant / Chemical Mixing 14–6
14.2.3 Structural and Layout 14–6

Section 15 Ultraviolet Disinfection 15–1
15.1 Overview 15–1
15.2 Disinfection Goals 15–1
15.2.1 UV for Giardia Disinfection 15–1
15.2.2 UV for Advanced Oxidation Processes (AOP) 15–1
15.3 Equipment 15–2
15.3.1 Medium Pressure versus Low Pressure High Output UV Systems 15–2
15.3.2 MP versus LPHO for Phasing in AOP at the Baker WTP 15–3
15.3.3 Results Summary 15–3
15.4 Design Criteria 15–4

Section 16 Contact (CT) Basin Disinfection 16–1
16.1 Overview 16–1
16.2 Disinfection Goals 16–1
16.3 Disinfection By-Products 16–1
16.4 Post Treatment Chemical Injection 16–2
16.4.1 Sodium Hypochlorite 16–2
16.4.2 Aqua Ammonia 16–2
16.4.3 Corrosion Inhibitor 16–2
16.4.4 Caustic Soda 16–2
16.5 Design Criteria Summary 16–2

Section 17 Treatment Plant Site 17–1
17.1 Overview 17–1
17.2 Existing Facilities 17–1
17.2.1 Baker WTP Use 17–2
17.2.2 Future Use Under Analysis 17–2
17.2.3 Planned for Demolition 17–2
17.2.4 Protect In Place 17–5
17.3 New Facilities 17–5
17.4 Treatment Plant Access 17–6
17.5 Treatment Plant Layout 17–7
17.6 Civil Site Design 17–8
17.7 Utilities 17–9
17.7.1 Baker Pipeline Connection 17–9
17.7.2 Flow Control Facility and Solids 17–9
17.7.3 Raw Water Pipelines 17–10
17.7.4 Product Water Pipelines 17–10
17.7.5 Chemical Distribution 17–11
17.7.6 Drainage 17–11
17.7.7 Water Discharge 17–11
17.7.8 Sewer 17–12

Section 18 Product Water Pump Station 18–1
18.1 Introduction 18–1
18.1.1 Capacity 18–1
18.1.2 Hydraulics 18–2
18.1.3 Operation 18–4
18.2 Site Development 18–4
18.3 Mechanical 18–4
18.4 Design Criteria 18–7
18.4.1 Surge 18–8
18.4.2 Geotechnical 18–8

Section 19 Electrical Site Infrastructure 19–1
19.1 Overview 19–1
19.2 Raw Water Pump Station 19–1
19.3 General Power service and Distribution – Baker Water Treatment Plant Site 19–2
19.3.1 Existing Conditions 19–2
19.3.2 Overall Site Electrical Distribution 19–2
19.3.3 Location of Electrical Facilities 19–7
19.3.4 Construction Requirements 19–8
19.3.5 SCE Contractual Requirements 19–8
19.3.6 Treatment Plant 19–8
19.3.7 Product Water Pump Station 19–11
19.4 Backup Power 19–11
19.4.1 Baker Site Generators 19–11
19.4.1.1 Treatment Plant 19–11
19.4.1.2 Product Water Pump Station 19–12
19.4.1.3 Raw Water Pump Station 19–13
19.5 Electrical Design Criteria 19–14

Section 20 Instrumentation and Control 20–1
20.1 Overview 20–1
20.2 Equipment / Instrument Tagging 20–1
20.3 Modes of Equipment Control 20–1
20.3.1 Local Control – Gates and Valves 20–1
20.3.2 Local Control – Process Equipment (pumps, fans, etc.) 20–2
20.3.3 Remote Control – Gates and Valves 20–2
20.3.4 Remote Control - Process Equipment (pumps, fans, etc.) 20–2
20.4 Control System Network 20–3
20.5 Control System Equipment Manufacturers 20–4
20.6 SCADA and PLC Programming 20–5

Section 21 Architectural 21–1
21.1 Overview 21–1
21.2 Architectural Criteria 21–1
21.3 Neighborhood and Developer Concerns 21–1
21.4 District and Stakeholder Issues 21–1
21.5 Process Design Criteria 21–2

21.6 Architectural Theme 21–2
21.7 Membrane Feed Water Pump Station 21–2
21.8 Treatment Building 21–3
21.9 Chemical Building 21–3
21.10 CT Basin 21–4
21.11 Product Water Pump Station 21–4

Section 22 Site Security 22–1
22.1 Overview 22–1
22.2 Raw Water Pump Station 22–1
22.3 Treatment Plant 22–1
22.4 Flow Control Facility and TCWD Pump Station 22–1
22.5 Product Water Pump Station 22–1

Section 23 Economic Evaluation 23–1
23.1 Overview 23–1
23.2 Objectives 23–2
23.3 Background 23–2
23.4 Economic Evaluation 23–3
23.5 Capital Costs 23–4
23.5.1 Construction 23–4
23.5.2 Other Capital Costs 23–5
23.6 Operation and Maintenance Costs 23–9
23.6.1 Energy Costs 23–9
23.6.2 Chemical and Replacement Costs 23–9
23.6.3 Labor Costs 23–10
23.6.4 Other O&M Costs 23–10
23.7 Baker WTP Water Cost 23–10
23.8 Water Cost Comparison 23–10

Section 24 Institutional Factors 24–1
24.1 Background 24–1
24.2 MWD Coordination 24–1
24.2.1 Capacity of OC-33 24–1
24.2.2 Flow through OC-33 24–1
24.2.3 Baker Surge Analysis 24–2
24.2.4 Product Water Pump Station Discharge to AMP 24–2
24.2.5 AMP Surge Analysis 24–2
24.2.6 Raw Water Delivery Protocol 24–2
24.3 Regional Water Quality Control Board 24–3
24.4 Permitting and Coordination 24–3

Section 25 Schedule 25–1
25.1 Overview 25–1
25.2 Schedule 25–1

List of Appendices

Appendix A Memorandum – Well No. 1
Appendix B Baker Pipeline – Flow Test Results
Appendix C Raw Water Facilities Previously Considered
Appendix D Construction Plans of OC-33
Appendix E Raw Water Pump Station Calculations
Appendix F Forebay Calculations
Appendix G Process Calculations
Appendix H Chemical System Calculations
Appendix I Backwash Wastewater Calculations
Appendix J Ultraviolet Disinfection Calculations
Appendix K Contact Basin Disinfection
Appendix L Product Water Pump Station
Appendix M IRWD Process Equipment & Instrument Tag Guideline
Appendix Q Economic Evaluation Calculations

(This Page Intentionally Left Blank)

List of Exhibits

Exhibit ES-1 Baker WTP Project Illustration ES–2
Exhibit ES-2 Raw Water System Overview ES–5
Exhibit ES-3 Process Flow Diagram ES–7
Exhibit ES-4 Baker Site Existing Facilities ES–15
Exhibit ES-5 Proposed Site Layout ES–17

Exhibit 1.1 Project Overview 1–5
Exhibit 1.2 Project Summary Schematic 1–9

Exhibit 2.1 Raw Water Sources 2–3

Exhibit 3.1 Conveyance System Overview 3–3
Exhibit 3.2 Santiago Lateral Profile 3–5
Exhibit 3.3 Baker Pipeline Profile 3–9
Exhibit 3.4 Irvine Lake and Capacity 3–13
Exhibit 3.5 Raw Water Conveyance System Operation Summary 3–19
Exhibit 3.6 Raw Water Pump Station Gravity Operation Schematic 3–21
Exhibit 3.7 Raw Water Pumping Operation Schematic 3–23
Exhibit 3.8 Baker Pipeline vs. Irvine Lake Pipeline HGL 3–29
Exhibit 3.9 Raw Water Conveyance System Operation Schematic 3–33
Exhibit 3.10 Hydraulic Profile Main Process 3–37
Exhibit 3.11 Hydraulic Profile 3–41

Exhibit 5.1 Raw Water Pump Station Zones of Operation 5–3
Exhibit 5.2 Raw Water Pump Station Demolition Plan (Drawing D2) 5–6
Exhibit 5.3 Raw Water Pump Station Site Improvements (Drawing C3). 5–7
Exhibit 5.4 Mechanical Plan and Sections (Dwgs M17, M18 and M19). 5–8

Exhibit 7.1 Flow Control Valve 7–3
Exhibit 7.2 Sleeve Valve Flow Control Facility (Drawing M1) 7–1
Exhibit 7.3 Flow Control Facility Site 7–11

Exhibit 9.1 Forebay Plan (Drawing M15) 9–2
Exhibit 9.2 Forebay Section (Drawing M16) 9–2

Exhibit 10.1 Modeled Feed Flow Rate Variations 10–3
Exhibit 10.2 Feedwater Pump Station Layout 10–9

Exhibit 11.1 Flash Mix Schematic 11–4

Exhibit 12.1 Treatment Process Comparison Matrix 12–3
Exhibit 12.2 Process Flow Diagram 12–7
Exhibit 12.3 Membrane Building Preliminary Layout (Drawing R1) 12–13

Exhibit 13.1 Chemical Building Plan (Drawing M2) 13–13

Exhibit 14.1 Sources of Waste Washwater 14–1

Exhibit 17.1 Baker Site Existing Facilities.....17–3
Exhibit 17.2 Proposed Site Layout (Drawing C1 and Exhibit ES-4) 17–8
Exhibit 17.3 Treatment Plant Site Concept Grading Plan (Drawing C2) 17–8

Exhibit 18.1 Product Water Pump Station Pump Curve.....18–5
Exhibit 18.2 Product Water Pump Station Site Plan (Drawing C4). 18–4
Exhibit 18.3 Product Water Pump Station Mechanical Plan (Drawings M20 and M21) 18–4
Exhibit 18.4 Product Water Pump In Meter Vault Plan and Section (Drawing M22) 18–7

Exhibit 19.1 Raw Water Pump Station Single Line Diagram (Drawing E11) 19–1
Exhibit 19.2 Raw Water Pump Station Site Plan (Drawing E10).....19–2
Exhibit 19.3 Existing Electrical Services.....19–3
Exhibit 19.4 Overall Power Service Block Diagram 19–5
Exhibit 19.5 Overall Site Plan (Drawing E2) 19–2
Exhibit 19.6 Electrical Service Equipment Clearance 19–9
Exhibit 19.7A Main Switchboard Single Line Diagram (Drawing E3).....19–8
Exhibit 19.7B Water Treatment Plant Single Line Diagram (Drawing E5) 19–8
Exhibit 19.7C Chemical Building Single Line Diagram 1 (Drawing E6) 19–8
Exhibit 19.7D Chemical Building Single Line Diagram 2 (Drawing E7) 19–8
Exhibit 19.7E Feedwater Pump Station Single Line Diagram (Drawing E8).....19–8
Exhibit 19.7F Trabuco Pump Station Single Line Diagram (Drawing E9).....19–8
Exhibit 19.8 Water Treatment Plant Site Plan (Drawing E4).....19–11
Exhibit 19.9 Product Water Pump Station Single Line Diagram (Drawing E13)....19–11
Exhibit 19.10 Product Water Pump Station Site Plan (Drawing E12).....19–11

Exhibit 20.1 SCADA Block Diagram (Drawing I011).....20–3

Exhibit 23.1 Cost of Water Comparison Imported Water vs. Baker WTP.....23–15

Exhibit 25.1 Baker WTP Schedule 25–2
Exhibit 25.2 Raw Water Pump Station / OC-33 Schedule 25–3

List of Tables

Table ES-1 Estimated Capital Cost Summary ES–21
Table ES-2 Estimated Annual O & M Cost Summary ES–23
Table ES-3 Baker WTP Schedule Summary ES–24

Table 1.1 Stakeholder Summary 1–3

Table 2.1 Water Quality by Source1 2–7
Table 2.2 Title 22 Surface Water Treatment Articles 2–9
Table 2.3 Summary of Regulatory Disinfection Requirements 2–10
Table 2.4 Product Water Quality Goals Summary 2–13

Table 3.1 Raw Water Conveyance Operational Schemes 3–17
Table 3.2 Operational Scheme – Baker to Irvine Lake Pipeline 3–27

Table 4.1 Maximum OC-33 Flow Rate 4–2

Table 5.1 RWPS Capacity 5–1
Table 5.2 RWPS Hydraulics 5–2
Table 5.3 RWPS Pump Criteria 5–7
Table 5.4 RWPS Mechanical Criteria 5–9

Table 6.1 TCWD Pump Station Design Criteria 6-2

Table 7.1 Two Parallel 12-inch Ball Valves and Static Sleeve Valves 7–5
Table 7.2 Single 18-inch Ball Valve and 16-inch Static Sleeve Valve 7–7
Table 7.3 Single 18-inch Angle Pattern Sleeve Valve 7–9
Table 7.4 Acceptable Design Limits 7–12
Table 7.5 Flow Control Facility Design Criteria 7–12

Table 8.1 Pros and Cons of Chlorine Dioxide Generation Methods 8–4
Table 8.2 Pros and Cons of Chlorine Dioxide Pacing Methods 8–5
Table 8.3 Iron and Manganese Management Design Criteria 8–8

Table 9.1 Forebay Design Criteria 9–4

Table 10.1 Feed Water Pump Station Hydraulics 10–2
Table 10.2 Feed Water Pump Design Criteria 10–7
Table 10.3 FWPS Mechanical Criteria 10–8

Table 11.1 Strainer Design Criteria 11–4
Table 11.2 Flash Mix Design Criteria 11–5

Table 12.1 Key Processes and Their Roles in Meeting Treatment Objectives 12–5
Table 12.2 Membrane Filtration System Design Criteria 12–12

Table 13.1 Pipe and Storage Tank Materials Summary 13–3
Table 13.2 Primary Coagulant Design Criteria 13–5
Table 13.3 Sodium Hydroxide Design Criteria 13–6
Table 13.4 Citric Acid Design Criteria 13–7
Table 13.5 Sodium Bisulfite Design Criteria 13–8
Table 13.6 Sodium Hypochlorite Design Criteria 13–9
Table 13.7 Aqua Ammonia Design Criteria 13–11
Table 13.8 Chlorine Dioxide Design Criteria 13–12

Table 14.1 Summary of Combined Waste Washwater Characteristics 14–2
Table 14.2 Preliminary Screening of CWW Treatment Alternatives 14–3
Table 14.3 Summary of Final Screening of Alternatives CWW1 and CWW2 14–4

Table 15.1 Generalized Comparison of MP and LPHO UV Systems 15–3
Table 15.2 UV System Design Criteria 15–4

Table 16.1 Basin Design Criteria 16–3

Table 17.1 New Facilities Summary 17–6
Table 17.2 Layout Advantages 17–8
Table 17.3 Product Water Pipelines 17–10
Table 17.4 Chemical Distribution Pipelines 17–11

Table 18.1 Product Water Pump Station Capacity 18–1
Table 18.2 PWPS Capacity and HGL Requirements 18–2
Table 18.3 PWPS Capacity and HGL Requirements 18–3
Table 18.4 Product Water Pump Station Design Criteria 18–7

Table 19.1 Water Treatment Plant Generator Sizing Criteria 19–12
Table 19.2 Product Water Pump Station Generator Sizing Criteria 19–12
Table 19.3 Electrical Equipment Summary 19–14

Table 22.1 Security Camera Manufacturer Data 22–1

Table 23.1 Baker WTP PRoject Alternatives Summary 23–2
Table 23.2 Cost Summary by Alternative 23–3
Table 23.3 Project Summary 23–4
Table 23.4 Summary of Estimated Capital Costs 23–7
Table 23.5 Estimated Annual O&M Cost Summary 23–9
Table 23.6 Summary of Annual Treated Water Cost 23–11

Table 24.1 Permit Compliance Plan 24–5

Table 25.1 Baker WTP Schedule Summary 25–1

EXECUTIVE SUMMARY

GENERAL

This report presents a summary description of the Baker Water Treatment Plant Project, including the raw water conveyance system, pre-treatment systems, membrane system, post-treatment systems, and product water delivery systems. The intent of this Preliminary Design Report (PDR) is to document the work that has been completed, including existing facilities investigations and testing, analysis of alternatives, economic analyses, and preliminary design, and to describe the project that is being recommended for final design, including project economics and implementation schedule.

INTRODUCTION AND BACKGROUND

The Baker Water Treatment Plant (Baker WTP) is a regional project that will treat up to 43.5 cfs (28 mgd) of raw water imported from the Metropolitan Water District (MWD) or supplied locally from Irvine Lake, to drinking water standards to supply water agencies in southern Orange County.

Irvine Ranch Water District (IRWD) is the lead agency for the Baker WTP project. The Project Stakeholders and their respective project capacity rights as currently defined are:

- El Toro Water District – 5.0 cfs
- Irvine Ranch Water District – 10.5 cfs
- Moulton Niguel Water District – 13.0 cfs
- Santa Margarita Water District – 13.0 cfs
- Trabuco Canyon Water District – 2.0 cfs
- Municipal Water District of Orange County – 0 cfs

In December 1999, the Allen McColloch Pipeline (AMP) ruptured causing significant reduction in MWD supplies to south Orange County, and demonstrating south Orange County's dependence on AMP operation. The observed dependence on the AMP, led the Santiago Aqueduct Commission (SAC) to consider a new water treatment plant utilizing the Baker Pipeline for raw water transmission. In 2006, SAC and Project Stakeholders undertook a study to determine the feasibility of constructing a surface water treatment plant that could take advantage of already existing infrastructure, to develop a cost-effective local source of supply. This study concluded that such a project was feasible from both an engineering and cost perspective, and that existing infrastructure, primarily the SAC-owned Baker pipeline, Irvine Lake pipeline, and MWD owned AMP, could be used to convey raw water to the plant and deliver potable water to

local water agencies. The study also recommended that a new treatment plant using microfiltration membrane technology, pressure driven, be constructed at the former Los Alisos Water District (LAWD) Baker WTP site, located in the City of Lake Forest, near the terminus of the Baker pipeline and adjacent to the AMP. Subsequent engineering investigations have confirmed these recommendations, resulting in Project Stakeholders deciding to move forward with Project preliminary design.

PROJECT OVERVIEW

The Baker WTP Project has three primary components: raw water conveyance system, treatment system, and product water delivery system. Exhibit ES-1 schematically illustrates the proposed Baker WTP Project.

Exhibit ES-1 Baker WTP Project Illustration

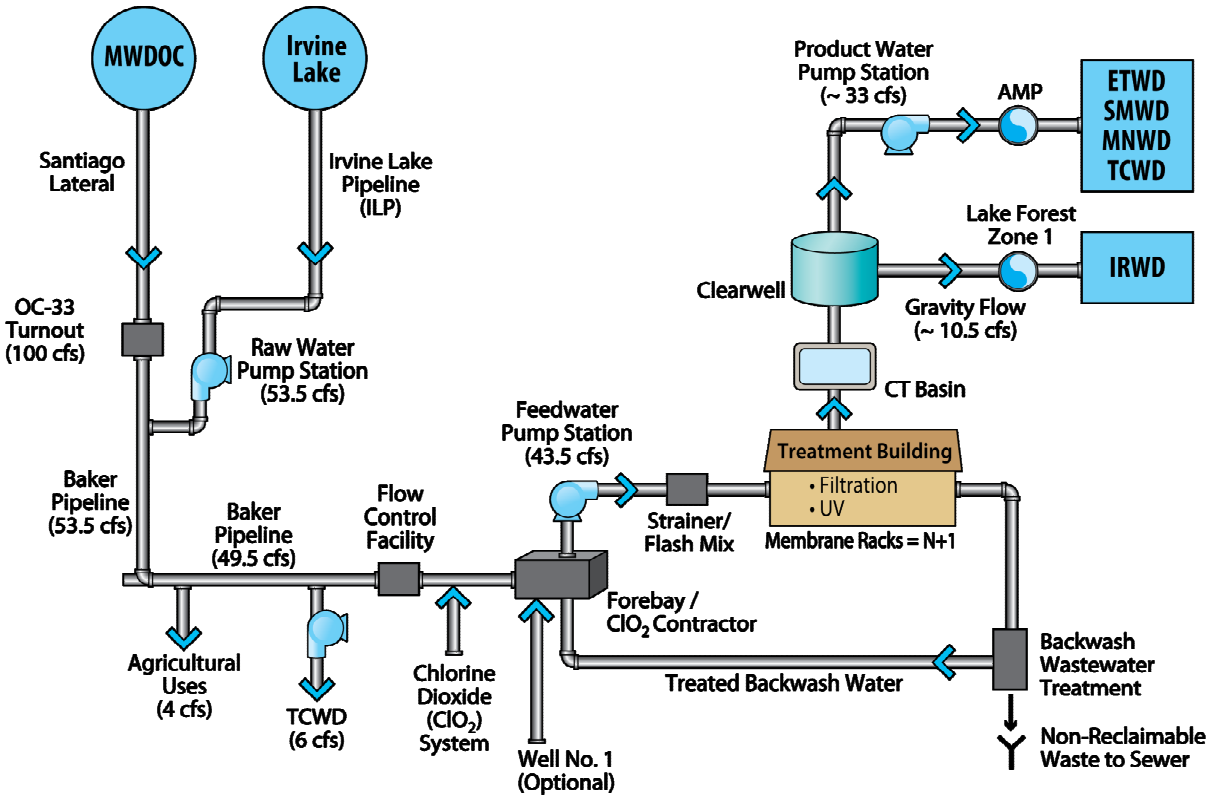

The Baker WTP Project, starting at the OC-33 turnout, will use existing facilities or will construct new facilities that are located in the south Orange County cities of Orange, Irvine, and Lake Forest and unincorporated Orange County. The majority of new facilities, including all treatment processes, will be located at the former Los Alisos Water District Baker Plant site, located in the City of Lake Forest.

The following sub-sections briefly describe each of the Baker WTP Project primary components.

RAW WATER CONVEYANCE SYSTEM

The raw water delivery system is comprised primarily of existing facilities. New facilities include a raw water pump station, a pump station for TCWD, and flow control at the Baker WTP. Exhibit ES-2 shows an overview of the Baker WTP raw water delivery system.

For the majority of the year, the raw water source will be a blend of Colorado River Water (CRW) and State Project Water (SPW), delivered from MWD's Lower Feeder system to MWD's Santiago Lateral to SAC's Baker Pipeline, through the OC-33 turnout, and then to the Baker Plant.

During certain times of the year, and when MWD water is not available, the raw water source will be Irvine Lake, which stores a combination of MWD water (as described above) and surface runoff from the Irvine Lake watershed. Irvine Lake is jointly owned by IRWD and Serrano Water District. Irvine Lake water will be delivered to the plant via IRWD's Irvine Lake Pipeline (ILP), then to the Baker Pipeline and then to the Plant.

To deliver 43.5 cfs of Irvine Lake water to the Baker WTP at a required HGL of 690 ft, a raw water pump station is required. This raw water pump station is designed to pump water from the ILP into the Baker Pipeline. The raw water pump station is sized to deliver up to 43.5 cfs of Irvine Lake water to the Baker WTP, 6 cfs to TCWD, and 4 cfs for existing agricultural use, for a total capacity of 53.5 cfs. The proposed raw water pump station is located at the Peters Canyon site in the City of Orange. The pump station will be housed within a building.

Flow from the Baker pipeline will terminate at the Baker WTP at a new forebay. Flow control is required just upstream of the forebay to achieve an HGL sufficient to supply the forebay with the plant's raw water demand.

If IRWD's Well No. 1 (LAWD) is re-commissioned, it may provide a small additional source of raw water, and may be designed to deliver groundwater to the forebay. Therefore, it is assumed that water from Well No. 1 will undergo the same treatment process as the water delivered from the Baker Pipeline.

TREATMENT SYSTEM

Exhibit ES-3 illustrates the recommended treatment system. Selection of the treatment process for the Baker WTP was based on many factors, including raw water quality,

(This Page Intentionally Left Blank)

m:\data\10106232\gis\Baker_WTP_Raw_Water_Conveyance.mxd DJ 11/20/09

RBF CONSULTING GIS

carollo Engineers...Working Wonders With Water™

0 1 2 Miles

Baker Pipeline
Santiago Lateral
ILP (Future Recycled Water)
Irvine Lake Pipeline
Pump Station
Reservoir

Baker Water Treatment Plant

Raw Water System Overview

Exhibit ES-2

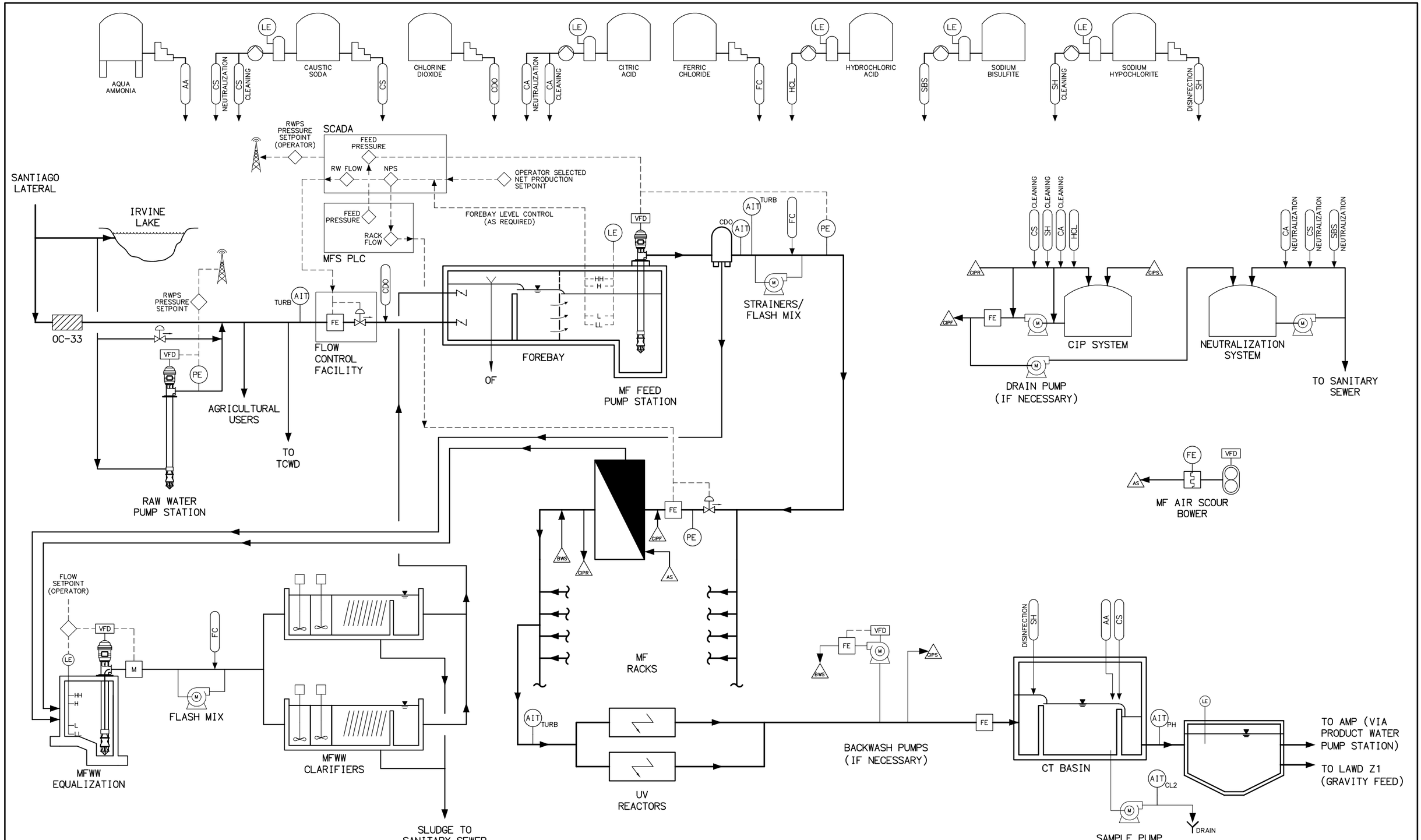

RBF CONSULTING

carollo

IRVINE RANCH WATER DISTRICT

BAKER WATER TREATMENT PLANT

PROCESS FLOW DIAGRAM

EXHIBIT

ES-3

drinking water quality regulations (current and future), ease of operation, and life-cycle cost. Considerable focus was placed on ensuring that overall project costs, variable raw water quality, taste and odor flexibility, ease and cost of operation and maintenance, and plant footprint size were all acceptable. With all alternatives and factors presented and considered, IRWD and the Project Stakeholders confirmed the selection of pressurized membrane filtration for Baker WTP.

The main components of the treatment system are all located at the Baker WTP site and are briefly described below:

CHLORINE DIOXIDE PRE-TREATMENT

Chlorine dioxide will be used for pretreatment of iron and manganese when Irvine Lake water is being supplied to the plant. Through bench testing, it was determined that chlorine dioxide is the most effective pretreatment oxidant for Irvine Lake water, and is essential for prevention of membrane fouling. Effective removal of iron and manganese also will mitigate potential aesthetic issues of the product water and will ensure compliance with USEPA secondary MCLs.

Chlorine dioxide will be dosed upstream of the forebay, downstream of the flow control valve.

Chlorine dioxide will be generated at the plant, due to its inability to be compressed or stored commercially as a gas because of its explosive properties. It was decided that a three chemical combination, using sodium chlorite, sodium hypochlorite, and hydrochloric acid, would be used to generate the chlorine dioxide to avoid the need for chlorine gas storage and use at the plant.

Chemicals will be stored in a fully enclosed chemical building located on site.

FOREBAY AND FEED WATER PUMP STATION

The forebay will control or enhance hydraulic operations and treatment processes and will provide four primary functions:

- storage needed to equalize flow from the Baker Pipeline to the membrane filtration system (MFS),
- protection of the MFS from pressure surges in the Baker Pipeline,

- contact time for the chlorine dioxide pre-treatment system required when Irvine Lake water is supplied to the plant,
- serves as a forebay for the membrane feed water pump station.

The forebay is sized at 785,000 gallons and will be a cast-in-place, partially buried structure, with a roof system that will accommodate a fully enclosed Feed Water Pump Station.

The Feed Water Pump Station will transfer water from the forebay through the membrane system. Flow to the membranes will continually vary based upon a number of factors, including cycle times for backwash, chemically enhanced backwash, clean-in-place operations, and membrane integrity testing. Water levels in the forebay will vary due to the variation in flow between the Baker Pipeline supply and the variable feed water rates. Anticipated maximum feed pressures to the membrane system are in the range of 25 psi to 40 psi. The feed water pump station will be equipped with VFD-driven vertical turbine pumps and will be housed in a fully enclosed structure located on top of the forebay roof.

STRAINER / FLASH MIX SYSTEM

Wedge wire type feed water strainers (250 μm) will be used to remove debris and large particles from the flow stream that can damage and/or plug membrane hollow fibers and pores.

Coagulant will be fed upstream of the MFS to reduce the rate of membrane fouling and reduce the formation of disinfection by products. Coagulant must be thoroughly mixed for effective coagulation. A pump diffusion flash mix system will be used for this purpose. The final decision on coagulant is pending jar testing of Irvine Lake water to determine effectiveness to reduce TTHM formation potential. Jar testing will be performed by Carollo at the start of final design. The two coagulants under consideration are Polyaluminum chlorides (PACl)/aluminum chlorohydrates (ACH) and ferric chloride.

PRESSURIZED MEMBRANE FILTRATION (PMF)

Pressurized Membrane Filtration (PMF) is the core filtration process selected for the Baker WTP. PMF will be used at the Baker WTP to meet California Department of Public Health (CDPH) treatment requirements for turbidity removal and to partially satisfy the disinfection requirement.

The membrane filtration system will be designed to net 28 mgd. Additional water will be produced by the system for cleaning sequences (chemical cleaning and backwash). Feed water recovery has been specified to be a minimum of 92%.

The membrane system will be PVdF (Polyvinylidene fluoride) hollow fiber based systems, filtering water from outside to inside. Individual modules with capacities of 15 to 20 gpm are assembled on individual racks with common piping with capacities of 2 mgd to 3 mgd, depending upon the system manufacturer. A total of not more than 14 racks is anticipated, which includes one fully redundant rack.

The PMF equipment will be housed within a fully enclosed treatment building. The treatment building will contain the membrane filtration system (racks, cleaning, backwash and air subsystems, and controls), UV system, electrical equipment, control room, laboratory (wet room), and HVAC equipment.

From September to December 2007 (Phase I), and then from February to April 2008 (Phase II), pressure membrane system pilot tests were performed on Irvine Lake water and SPW. Two manufacturers were selected for the pilot testing: Pall and Siemens. Each of these manufacturers has been requested to prepare a bid for supplying the Baker WTP membrane system [Pall Microza – Module designation USV 6203 (MF); Siemens CP-Module designation L2OV (UF)]. The bids will be competitive, evaluated bids, with the basis of selection being a present worth analysis of chemical, energy, and membrane replacement costs, plus bid price. Bids are expected to be received April 2010.

BACKWASH WASTE WATER SYSTEM

Treatment and recycling of the combined waste washwater (CWW) minimizes plant waste discharges and maximizes plant feed water recovery. The Baker WTP will collect and treat waste water produced within the plant, and recycle this treated waste water to the head of the plant. The total or CWW for the Baker WTP comes from two sources: the membrane feed water strainers waste washwater (SWW) and the membrane filtration system waste washwater (MFWW), excluding chemical cleaning solutions. The estimated flowrate for the CWW depends upon the membrane system selected and performance, but is estimated to range between 0.5 and 3.0 mgd.

Seven alternative backwash waste water systems were investigated and from this screening process two alternatives, second stage membranes and plate settlers, were advanced for further evaluation. The final screening analysis resulted in conventional treatment utilizing plate settlers being recommended due to their adequate performance for the intended application, lower capital cost, and lower annual operating costs.

Discharges to the sanitary sewer will be greatly reduced due to the backwash waste water system. Residual discharges to the sanitary sewer are estimated to be about 130,000 to 200,000 gpd (primarily dependent upon the type of membrane system selected), and the instantaneous maximum flow is anticipated at 0.5 cfs (or 220 gpm).

With the backwash waste water system, the overall feed water recovery for the plant is estimated to be 99.5%, based on an average raw water flow rate of 28.1 mgd.

UV DISINFECTION

UV disinfection will be provided at the Baker WTP following membrane treatment to meet regulatory disinfection requirements. CDPH establishes total treatment requirements with respect to *Giardia*, virus, and *Cryptosporidium* reduction, based upon federal requirements in the Interim Enhanced Surface Water Treatment Rule (IESWTR) and the Long Term 2 Enhanced Surface Water Treatment Rule (LT2ESWTR).

With membrane filtration credits provided by the CDPH considered, the disinfection process requirements for the Baker WTP are 0.5-log *Giardia* inactivation and 4-log virus removal (see Table 2.3).

The primary goal of the UV disinfection is to achieve the 0.5-log *Giardia* inactivation. The virus removal requirement will be achieved by chemical disinfection.

The UV system can also be used for destruction of trace organic compounds through the use of higher UV doses alone and/or in combination with hydrogen peroxide as an advanced oxidation process (AOP). Use of UV for destruction of trace organics (including taste and odor causing compounds) assumes that granular activated carbon (GAC) contactors are installed downstream for removal of hydrogen peroxide and byproducts generated by this process. Treatment for taste and odor causing compounds at the Baker WTP is limited to space planning for a future GAC system, and expandability of the UV system for AOP.

The UV system design also considered CDPH notification level for N-nitrosodimethylamine, more commonly referred to as NDMA, to account for future expandability needed in the UV system to achieve high UV doses for photolysis of NDMA.

A low pressure high output (LPHO) UV system was selected for the Baker WTP, after evaluation with medium pressure systems. The evaluation primarily centered around capital cost, life cycle cost, space requirements, and operations and maintenance requirements.

CONTACT (CT) BASIN

Following UV disinfection, the treated water will flow into a partially-buried concrete contact (CT) basin to provide disinfection contact time per CDPH regulations. The basin will be sized to provide adequate contact time for free chlorine to meet the 4-log virus inactivation requirement. This criteria assumes that the membrane filtration system is provided zero credit for virus inactivation.

Alternate sodium hypochlorite injection points will be provided in the basin to allow for manual adjustment of dosing points, in order to minimize TTHM formation during periods of low plant flow or when contact time in the CT basin is increased.

Post-treatment chemicals to be injected at the CT basin include: sodium hypochlorite for disinfection, aqua ammonia for chloramine formation, and caustic soda for pH control. Metering pumps for post-treatment chemicals will be paced on a flow meter located immediately upstream of the CT basin and adjusted based on a chlorine residual analyzer.

From the contact basin, the treated water flows to IRWD's existing 16 MG clearwell.

PRODUCT WATER DELIVERY SYSTEM

The product water delivery system includes an existing 16 MG clearwell, a new product water pump station, and the existing Allen McColloch Pipeline (AMP). All product water from the plant will initially be stored in existing Zone 1 (LAWD) reservoir, which will be converted to the Baker WTP clearwell. For design purposes, the HGL variation in the reservoir was set to fluctuate between 600 and 621 feet amsl.

A Product Water Pump Station (PWPS) will be constructed at a capacity of 33 cfs, which is based upon the total plant production of 43.5 cfs, minus IRWD's capacity allocation of 10.5 cfs. IRWD's capacity allocation will be delivered directly to their Zone 1 (LAWD) system through an existing 24-inch diameter pipeline.

The discharge hydraulic conditions of the PWPS are based upon the hydraulic grade line of the AMP. The AMP HGL varies greatly between summer (high demand) and winter (low demand) conditions. The absolute minimum and maximum HGL in the AMP are understood to be a low of 630 ft and a high of 806 ft per MWD's drawing B-416427 (AMP Hydraulic Plan and Profile). MWDOC has analyzed the AMP pipeline under peak day (maximum day demands) up to the year 2035. Based on this analysis, the lowest (non-surge) stable HGL was determined for 2035 to be approximately 703 ft at OC-88 (South County Pump Station), and 701 ft at OC-74 (IRWD connection point on the Baker site), which are within the range provided by Flow Science.

Hydraulic analysis verified the HGL fluctuation in the AMP require variable speed drives to maintain discharge flow under variable conditions. Speed reduction down to 70-percent was considered in selecting the type and number of pumps. It is recommended that for low discharge head conditions (below 690 feet), the flow into the AMP should be managed by pressure reduction with a throttling valve.

The design of the PWPS includes four (4) vertical turbine type duty pumps + one (1) stand-by pump configuration. The pump station will housed in a building, and will include an air conditioned electrical room with five variable frequency drive controllers. Equipment exterior to the building will include a surge tank, SCE transformer, switchboard, and power generator.

BAKER SITE

The Baker WTP will be located at the former Los Alisos Water District (LAWD) Baker Water Treatment Plant (WTP) site. Currently, there is existing operation of on-site facilities to provide supplemental water from the Baker Pipeline to the Zone A (LAWD) recycled water system, to supply demands to a nearby equestrian center and, at times provide make up water from local man made lakes. The original Baker Filter building will be demolished as part of this project, along with several other facilities, namely: storage building, 3.4 million gallon cast-in-place reservoir, Well No. 1 onsite storage and piping system. Prior to demolition IRWD will need to make provisions for an alternative supply of water to serve these demands.

The new Baker WTP will primarily be constructed at the “high” elevation area of the site. Several buildings will be protected-in-place in this area, namely the administration office and adjacent storage building. Exhibit ES-4 shows existing onsite facilities that will require demolition and those required to be protected-in-place.

The layout of the new Baker WTP is shown on Exhibit ES-5. The decision to construct the Baker WTP at the high elevation area was a result of cooperation between IRWD’s development group, which is planning to improve the Baker site’s low elevation area to include a future park and natural treatment system (NTS) basin, and IRWD’s engineering staff and consultant. There are several facilities that will be constructed at the low elevation site area. These facilities include a pipeline required to deliver water from the Baker WTP to the 16 MG clearwell, electrical service conduit, Trabuco Canyon Water District (TCWD) pump station, flow control facility, product water pump station and associated piping. These facilities have been sited to minimize potential for interference with proposed development plans.

DEVELOPMENT AREA

LOW SITE

EX 16.0 MG ZONE 1
RESERVOIR (BURIED)
(EMERGENCY STORAGE)

EX 16.0 MG ZONE 1
RESERVOIR (BURIED)
(CLEARWELL)

EX
2.0 MG
ZONE A
RESERVOIR

EX
2.0 MG
ZONE A
RESERVOIR

DEVELOPMENT AREA

EX ZONE B
BOOSTER PUMP
STATION

EX ZONE 2 WEST
BOOSTER PUMP
STATION

OC-74

LOW SITE

PIPE EASEMENT

PIPE EASEMENT

HIGH SITE

STORAGE

BAKER
FILTER
BLDG

EX
OFFICE

EX
STORAGE

WELL NO. 1
RES.

3.4 MG
ZONE 1 RESERVOIR

PROPERTY
BOUNDARY

HIGH SITE

WISTERIA LANE

LEGEND

- PLANNED FOR DEMOLITION
- PROTECT IN PLACE
- BAKER WTP USE
- TO BE DETERMINED

100 0 100 200 300

SCALE: 1"=100'

H:\PDATA\10106232\CADD\WATER\EXHIBITS\PDR\6232-EXH ES-4.DWG CHESS 3/2/10 6:19 pm

RBF CONSULTING

carollo

IRVINE RANCH WATER DISTRICT

BAKER WATER TREATMENT PLANT

BAKER SITE
EXISTING FACILITIES

EXHIBIT

ES-4

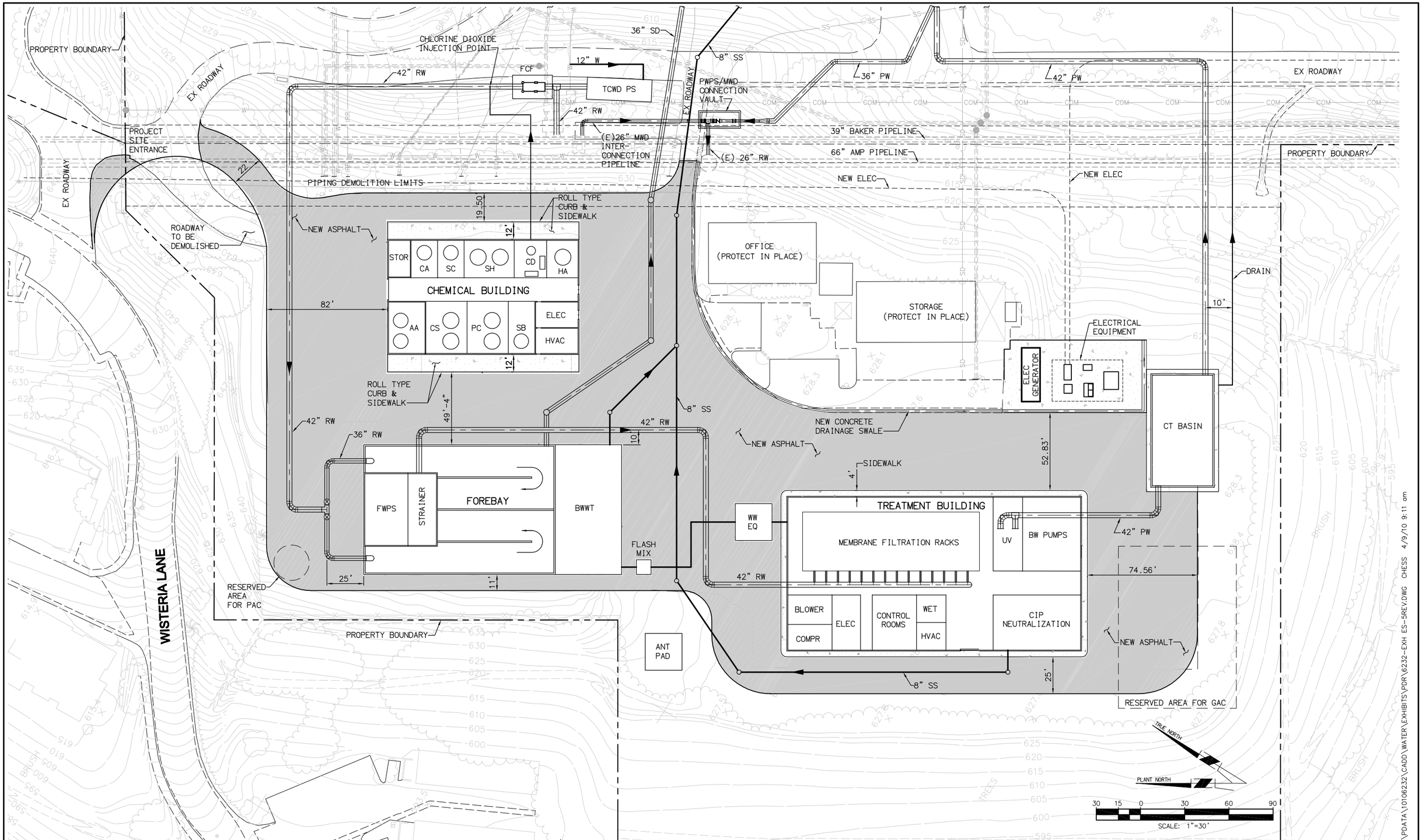

H:\PDATA\10106232\CADD\WATER\EXHIBITS\PDR\6232-EXH ES-5REV.DWG CHESS 4/9/10 9:11 am

RBF CONSULTING

carollo

IRVINE RANCH WATER DISTRICT

BAKER WATER TREATMENT PLANT

PROPOSED SITE LAYOUT

EXHIBIT

ES-5

ECONOMIC EVALUATION

For the Baker WTP Project, an economic evaluation was conducted. All costs are presented in April 2010 dollars (ENR Index = 8676). The capital costs approximate Class 3 budget estimates as defined by the Association for the Advancement of Cost Engineering (AACE). Estimates provided herein have an associated accuracy of -10 percent to +30 percent. Class 3 level estimates are intended for budget, authorization, or control.

CAPITAL COST

An updated estimate of construction cost has been prepared for the Baker WTP Project. Construction costs were converted to capital cost by including contingencies and non-construction project related costs to the estimate. A summary of these estimates are provided in Table ES-1. Cost estimates are included in Section 23 and Appendix Q of this report.

OPERATION AND MAINTENANCE COST

Operation and maintenance (O&M) costs have been developed from several data sources and engineering calculations. Table ES-2 contains a summary of the estimated annual O&M cost. A breakdown of the O&M costs is given in Section 23.

ANNUALIZED COST ESTIMATES

Annualized capital cost (with repayment over 30 years @ 4.5 percent) and annual O&M costs, were converted to $/acre-foot of water unit cost based on anticipated water volume production. The plant is assumed to have a 90 percent utilization throughout the year. Future projections, in $/acre-foot of water, to the year 2028 were developed based on inflation assumptions and anticipated escalation of fees as described in Section 23.

(This Page Intentionally Left Blank)

Table ES-1 - Baker WTP Project - Summary of Estimated Capital Costs [1]

Baker Water Treatment Plant	Cost
Equipment and Buildings	
WTP Equipment, Sitework and Buildings	$31,869,000
Mobilization / Insurance / Management [2]	$2,550,000
Subtotal (Equipment and Buildings)	***$34,419,000***
Integration Facilities	
OC-33 Expansion	$240,000
Raw Water Pump Station	$2,908,000
Flow Control Facility, Forebay Reservoir, TCWD PS and Feed Water PS	$4,300,000
Product Water Pump Station	$3,504,000
Backup Power	$1,250,000
Mobilization / Insurance / Management [2]	$976,000
Subtotal (Integration Facilities)	***$13,178,000***
SUBTOTAL (Equip. and Bldgs + Int. Facs.)	***$47,597,000***
District Costs [3]	**$2,200,000**
Baker Site Land Use Cost [4]	**$440,000**
Environmental [5], Engineering[6]	**$4,607,000**
Contingency / Legal [7]	**$6,611,000**
TOTAL ESTIMATED CAPITAL COST	**$61,455,000**

[1] Capital cost are Class 3 Estimates as defined by AACEI with estimated -10% to +30% range of accuracy

[2] Mobilization / Insurance / Management Cost calculated at 8-percent of capital cost

[3] Cost provided by IRWD - includes project management, field support, construction administrative services, inspection and G&A.

[4] Cost for land use at Baker Site per Baker WTP Agreement Section 3.1. Area = 4 acres. Unit Cost = $110,000 /acre

[5] Environmental Documentation cost is based on EIR preparation cost provided to IRWD of $170,000.

[6] Based on approved design fee for Baker WTP plus authorized flow test budget, and design fee for forebay and feed water pump station.

[7] Contingency / Legal is based on 15-percent of Subtotal (Equipment and Buildings + Integration Facilities excluding cost for Moblization, Insurance and Management).

Table ES-2 Estimated Annual O & M Cost Summary

Baker Water Treatment Plant [1]	Value
1 Chemical Mixing	$3,800
2 MF System	$716,300
3 UV System	$21,200
4 Process Chemicals	$1,212,100
5 Energy Costs from Pumping	$1,516,300
6 Washwater Pumping	$15,900
7 Labor [2]	$379,600
8 Other System O&M Costs [3]	$75,000
Cost per Year ($) [4]	**$3,940,000**

[1] Energy, Chemical, and Consumables (Replacement) costs are escalated at an annual rate of 5-percent.
[2] Labor costs are based on weekly operator staffing of T5 (40 hrs) and T4 (30 hrs), with escalation of 3-percent annually.
[3] Other O&M costs are escalated at a annual rate of 3-percent.
[4] Based on 90% treatment plant utilization (evaluated at 330 days per year). Rounded to nearest $1,000.

ECONOMIC EVALUATION RESULTS

The estimated capital cost of the project (in April 2010 dollars), including construction, engineering, environmental, construction management and administration, is $61,455,000.

The estimated annual operation and maintenance costs (in 2010 dollars), including energy, chemical and replacement costs, labor, and other ongoing costs is $3,940,200.

The cost of Baker WTP water is estimated as $766 per acre-foot, assuming capital cost amortized over 30 years at 4.5-percent interest, and excluding the cost of wheeling water still be finalized with MWD. Based upon rate projections provided by MWD, it is anticipated that treated water from the Baker WTP will cost the same as imported water by the year 2017, approximately 5 years after project startup, and at lower cost thereafter.

SCHEDULE

Table ES-3 summarizes the proposed project schedule.

Table ES-3 Baker WTP Schedule Summary

Construction Contract/ Milestone	Start Date	Finish Date
Raw Water Pump Station / OC-33 Modf.		
Design	April 2010	March 2011
Bidding & Award	March 2011	May 2011
Construction	June 2011	June 2012
Baker Water Treatment Plant		
Design	April 2010	March 2011
Bidding & Award	March 2011	May 2011
Construction	June 2011	November 2012

SECTION 1 INTRODUCTION

1.1 PROJECT OBJECTIVES

The Baker Water Treatment Plant (Baker WTP or Project) is a regional project, intended to:

- Increase potable water supply to south Orange County,
- Improve water reliability to areas of south Orange County by providing a local treatment plant, capable of treating water from MWD as well as local Irvine Lake water.
- Deliver a local potable water supply that can be relied upon in the event of emergency conditions or scheduled maintenance of the Metropolitan Water District's delivery system
- Produce potable water at a competitive cost to MWDOC treated water rates.

1.2 PROJECT BACKGROUND

The Baker WTP project will augment potable water supplies to parts of south Orange County, California by locally treating and delivering Colorado River Water, State Project Water, and Irvine Lake Water. South Orange County currently receives the majority of its potable water from Municipal Water District of Orange County (MWDOC) via Metropolitan Water District's (MWD's) Diemer Filtration Plant and Allen McCulloch pipeline, and is lacking large-scale alternative local supplies. This Project will provide a reliable local supply to south Orange County and is a result of years of coordination by south Orange County water agencies.

Several years ago, the Santiago Aqueduct Commission (SAC) undertook a study to determine the feasibility of constructing a surface water treatment plant that could take advantage of already existing infrastructure, to develop a cost-effective local source of supply. This study concluded that such a project was feasible from both an engineering and cost perspective. Part of this cost effectiveness is due to the use of existing infrastructure, primarily the SAC-owned Baker pipeline and Irvine Lake pipeline, which could convey raw water to the plant and MWD owned Allen McCulloch pipeline (AMP), which could be used to deliver potable water to local water agencies. The study also concluded that the treatment plant location was best suited at the former Los Alisos Water District (LAWD) Baker WTP site, located in the City of Lake Forest, near the terminus of the Baker pipeline and adjacent to the AMP.

Following completion of the SAC study, participating water agencies, identified in this report as Project Stakeholders, solicited proposals from Consultants, and selected the RBF/Carollo team to execute preliminary and final design tasks necessary to solicit competitive bids for construction, and to provide engineering support through construction and commissioning.

1.3 PROJECT STAKEHOLDERS

The Baker WTP Project is being implemented by Project Stakeholders. The Stakeholders include five (5) south Orange County water retail agencies, and the area's MWD member. These agencies are:

- El Toro Water District (ETWD)
- Irvine Ranch Water District (IRWD)
- Moulton Niguel Water District (MNWD)
- Santa Margarita Water District (SMWD)
- Trabuco Canyon Water District (TCWD)
- Municipal Water District of Orange County (MWDOC) - MWD member

The retail agencies are jointly financing the project. Each agency's financial participation will be proportionate to their capacity rights' shares in the project. MWDOC's participation in the Project is to facilitate coordination between the retail agencies and MWD and assisting in the water billing function. IRWD is the lead agency for the Baker WTP project, responsible for managing design, overseeing construction, and will also be responsible for operating and maintaining the plant.

All five water retail agencies are expected to receive water from the Baker WTP, and are expected to hold capacity rights to the plant.

1.4 BAKER WTP CAPACITY ALLOCATIONS / EXISTING FACILITIES CAPACITY RIGHTS

Capacity allocations in the Baker WTP are defined in the *Agreement for Construction, Operation and Maintenance of Baker Water Treatment Plant,* which was revised in December 2009 to reflect the Baker WTP capacity as 43.5 cfs. The capacity allocation among the Stakeholders in the Baker WTP is anticipated to be according to Table 1.1.

Each of the Stakeholders has unique water rights in the Baker Pipeline (managed by the Santiago Aqueduct Commission) and Allen McColloch Pipeline

(managed by Metropolitan Water District of Orange County). See Table 1.1 for a summary of capacity in both pipelines and the Baker WTP.

Table 1.1 – Stakeholder Summary

Agency	Baker WTP Capacity (cfs)	Existing Water Rights in Baker Pipeline	Existing Water Rights in AMP (through MWDOC)
Irvine Ranch Water District (IRWD)	10.5	Y	Y
El Toro Water District (ETWD)	5	N	Y
Moulton Niguel Water District (MNWD)	13	N	Y
Santa Margarita Water District (SMWD)	13	Y	Y
Trabuco Canyon Water District (TCWD)	2	Y	N
Total	**43.5**	-	-

Exhibit 1.1 depicts a portion of the Santiago lateral, the Baker Pipeline, the Irvine Lake Pipeline, and the Baker site.

1.5 PROJECT CONCEPT DEVELOPMENT

The development of the Baker WTP project concept as described in this PDR has evolved through a number of steps, including:

1.5.1 Feasibility Study

In August 2006, the Santiago Aqueduct Commission commissioned a feasibility study to investigate the concept of a treatment plant serving supplemental treated water to agencies of Southern Orange County. With water supply reliability as a focal point of the study, water supply to the Baker Pipeline was considered from Metropolitan Water District (MWD) and Irvine Lake. MWD receives supplies of Colorado River Water (CRW) and State Project Water (SPW). Thus, three primary water source types exist for the Project.

The feasibility study was completed January 2007, and amended in June 2007 to include further financial analysis. Analysis covered operational capacities of 33 and 40 cfs. Potential treatment processes were analyzed based on cost, treatment plant layout, and the capability of each process to effectively treat each water source type. The study concluded with the recommendations for the Baker WTP to be:

1) located at the Baker Site in Lake Forest, and
2) a pressure membrane filtration plant with disinfection by UV / chlorination.

1.5.2 Pilot Testing

Following the feasibility study, pilot testing with two pressure membrane filtration systems (Pall and Memcor CP/Siemens) was performed on Irvine Lake and State Project water. The final bench test report was completed in June 2007. The pilot test report was completed in August 2008. The pilot report verified adequate treatment by both manufacturer system, and established maximum flux rates for each of:

- Pall = 50 gfd
- Memcor = 45 gfd

1.5.3 Technical Memorandum

Following the award for design of Baker WTP, the RBF/Carollo engineering team completed a technical memorandum entitled *The Baker Regional Water Treatment Plant – Design Concept and Cost Update* in November 2008. The memorandum updated the preliminary design concept for Baker WTP at capacities of 40 and 60 cubic feet per second (cfs) in advance of a Baker Pipeline flow test, and estimated capital, operations and maintenance and product water costs, and compared these costs to the June 2007 financial analysis. Conclusions were that costs were generally comparable, assuming the same design configuration is implemented.

1.5.4 Baker Pipeline Flow Test

On April 21, 2009 a flow test of the Baker Pipeline was completed. The purpose of the flow test was to determine the current pipeline capacity based on the minimum hydraulic grade necessary to operate pressure membranes without pumping. Following the flow test, RBF Consulting prepared a preliminary design memorandum that summarized the results, and estimated the maximum capacity of the Baker Pipeline to be 40 cfs (based on a minimum required HGL of 720 ft at the Baker WTP site for pressurize membrane filtration at the high site elevation

1.5.5 Preliminary Design Memoranda

In May 2009, RBF/Carollo began submitting preliminary design memoranda (PDMs) to IRWD for the major project components. The purpose of the PDMs was to summarize the Project in greater detail, identify design-related issues associated with each major project component, identify alternatives, present evaluation of alternatives, make

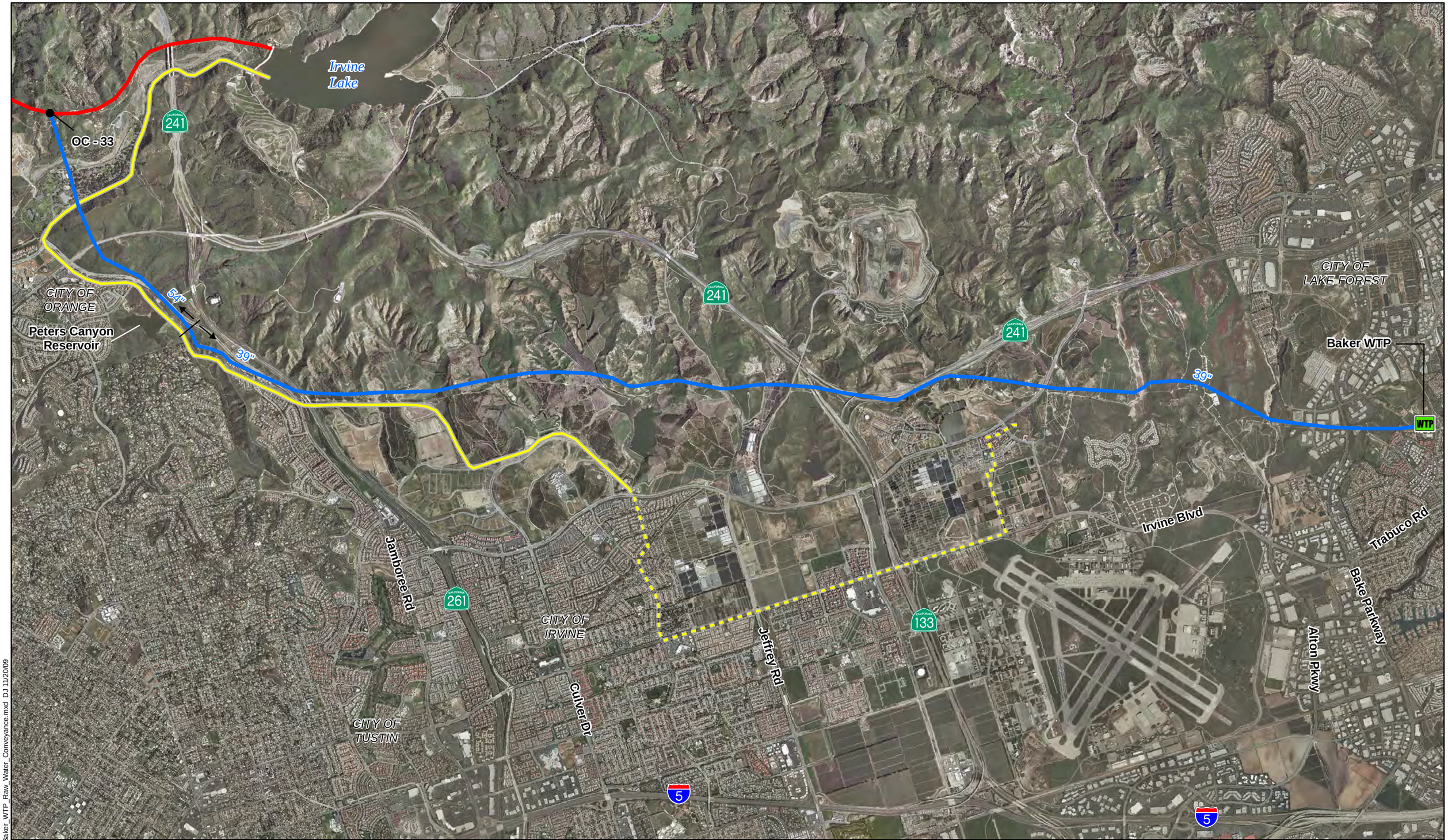

RBF CONSULTING GIS

carollo Engineers...Working Wonders With Water™

0 1 2 Miles

Baker Pipeline
Santiago Lateral
ILP (Future Recycled Water)
Irvine Lake Pipeline (ILP)

Baker Water Treatment Plant

Project Overview

Exhibit 1.1

m:\mdata\10106232\gis\Baker_WTP_Raw_Water_Conveyance.mxd DJ 11/20/09

recommendations, identify design criteria, and receive client feedback on major issues and decisions, as required. Each PDM was delivered to IRWD and distributed to the Project Stakeholders. Collectively, fifteen PDMs were prepared, as listed.

1. Baker Pipeline Hydraulics
2. Iron and Manganese Management
3. Product Water Pump Station
4. Membrane Filtration
5. Raw Water Conveyance Facilities / Raw Water Pump Station
6. Baker Plant Site – Facility Layouts / Plant Hydraulics
7. Pre-Treatment
8. Backwash Wastewater Treatment and Recovery
9. Chemical Storage
10. Disinfection
11. Electrical – Site Infrastructures
12. Instrumentation and Controls
13. Pump Station – Surge Analysis
14. Cost Estimate
15. Back-up Power Generation

Internal meetings were held with IRWD to review client comments. All review comments received from the PDMs are incorporated in this Preliminary Design Report.

1.5.6 Historical Overview

The Baker WTP project entails construction of a new membrane filtration plant at the Baker site. The Baker site was owned by the Los Alisos Water District, and utilized as the agency's headquarters and location of the Baker Filter Plant. The Baker Filter Plant was constructed in 1970 and had a rated capacity of 15 cfs. As water quality regulations became more stringent it was not cost effective to upgrade the Baker Filter Plant, so the plant was decommissioned.

When residential development increased in Southern Orange County in the mid-1970s, the need for a larger transmission pipeline became evident. In 1977, the design of the Diemer Intertie or Allen McColloch Pipeline (AMP) began. The AMP was constructed to deliver treated

imported water to southern Orange County from the Diemer Plant located in the City of Yorba Linda. Demand increased in the AMP, leading to the need for a parallel pipeline. During construction of the AMP Parallel a reach of the 54-inch section of the Baker Pipeline was utilized. To replace the reach for the Baker Pipeline a new reach of 39-inch pipeline was constructed.

As residential development increased, reliance on raw water through the Baker Pipeline diminished. Eventually, Baker Pipeline operation was reduced to delivery of water for remaining agriculture use (approximately 4 cfs) and Trabuco Canyon Water District's Dimension Plant (maximum flow rate of 6 cfs).

In December 1999, the Allen McColloch Pipeline ruptured causing significant reduction in MWD supplies to southern Orange County, and demonstrating the dependence of this region on AMP operation. The observed dependence on the AMP, led the Santiago Aqueduct Commission to consider a new water treatment plant utilizing the Baker Pipeline for raw water transmission, and to begin seeking Project participants (Stakeholders).

1.6 SUMMARY OF PROJECT

The Baker WTP project consists of existing and proposed facilities for raw water conveyance, water treatment and product water delivery. A schematic diagram summarizing the Baker WTP project and ownership of facilities is provided as Exhibit 1.2.

The following descriptions provide a brief summary of the overall project. Further details regarding each aspect of the overall Project are provided in the later sections of the Preliminary Design Report.

1.6.1 Raw Water

The sources, facilities and operation to ensure raw water supply include:

1.6.1.1 Sources

Raw water conveyed to the Baker WTP will be imported water from the Metropolitan Water District (MWD) system, or Irvine Lake water. The MWD system will supply Colorado River Water, State Project Water or a combination of both. Irvine Lake water will be used under two conditions:

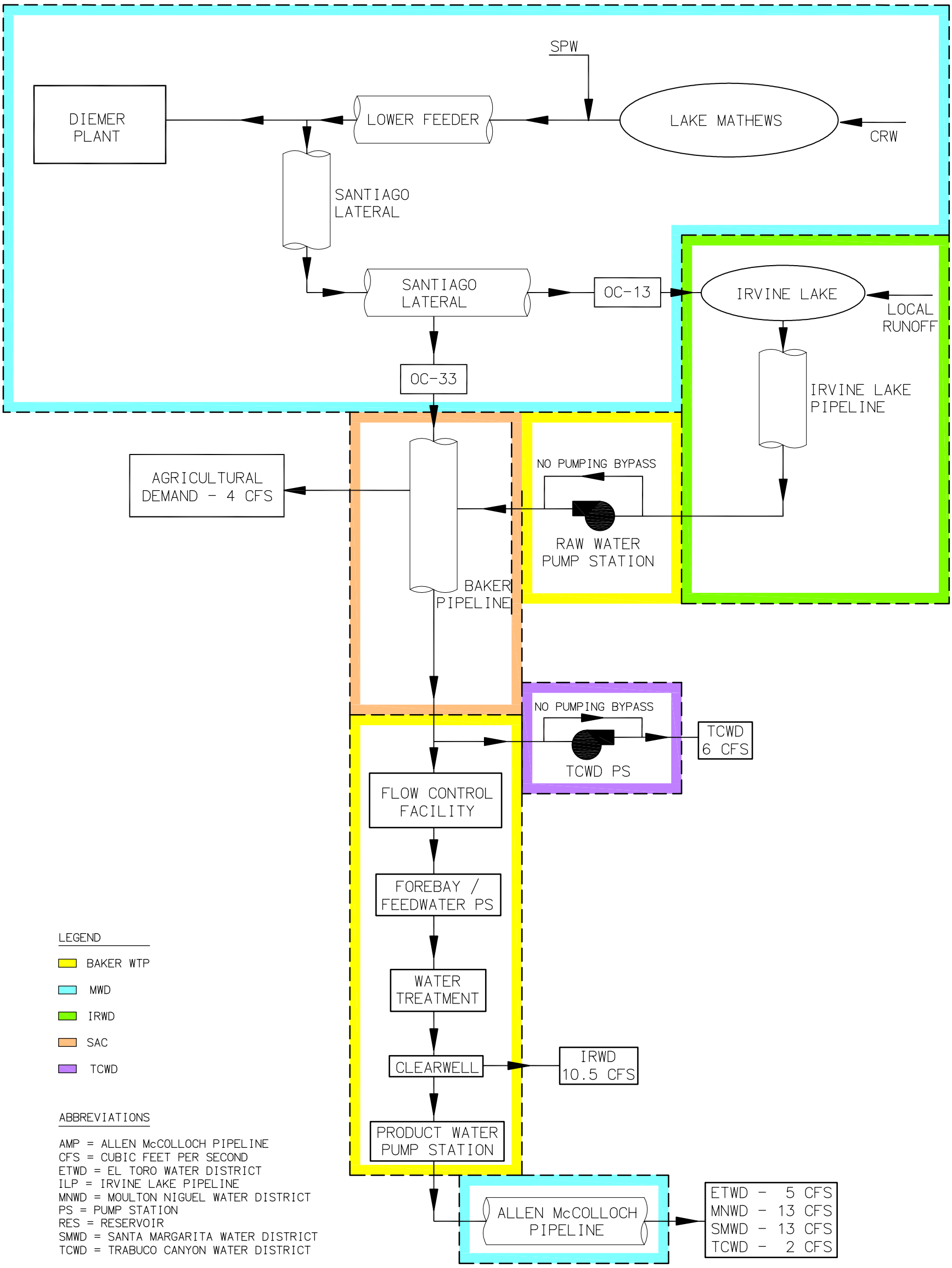

LEGEND

- BAKER WTP
- MWD
- IRWD
- SAC
- TCWD

ABBREVIATIONS

AMP = ALLEN McCOLLOCH PIPELINE
CFS = CUBIC FEET PER SECOND
ETWD = EL TORO WATER DISTRICT
ILP = IRVINE LAKE PIPELINE
MNWD = MOULTON NIGUEL WATER DISTRICT
PS = PUMP STATION
RES = RESERVOIR
SMWD = SANTA MARGARITA WATER DISTRICT
TCWD = TRABUCO CANYON WATER DISTRICT

H:\PDATA\10106232\CADD\WATER\EXHIBITS\PDR\6232-EXH-RWSYS.DWG CHESS 4/21/10 1:12 pm

RBF CONSULTING

carollo

IRVINE RANCH WATER DISTRICT

BAKER WATER TREATMENT PLANT
PROJECT SUMMARY SCHEMATIC

EXHIBIT 1.2

1) outage of Santiago Lateral or Diemer Filtration Plant (emergency conditions or scheduled maintenance)

2) as determined annually - based on rainfall conditions and Irvine Lake water level, not exceeding a three month period.

Small additional flow may be delivered to the Baker WTP from IRWD's Well No. 1, which is approximately 1 mile west of the Baker WTP.

1.6.1.2 Conveyance System

Primary operation of Baker Pipeline will consist of raw water supplied by gravity from the Santiago Lateral to the Baker WTP. Secondary operation will convey Irvine Lake water to the Baker WTP by pumping (Raw Water Pump Station) from the Irvine Lake Pipeline to the Baker Pipeline. Primary and secondary operation will supply up to 43.5 cfs (28 mgd) for treatment.

A forebay will be constructed at Baker WTP to manage variable treatment process flow rates and isolate the Baker WTP from the hydraulics of the Baker Pipeline. Flow and head conditions into the forebay will be controlled by a flow control facility, consisting of a motor operated sleeve valve. A pump station (Feedwater Pump Station) will be constructed to boost water from the forebay to pressure membrane filters. The pump station will boost raw water from the forebay to the hydraulic grade required for filtration through the membrane media.

1.6.2 Operation

Raw water delivery will be scheduled with Metropolitan Water District. All flows scheduled but not delivered through the OC-33 turnout will result in discharge to Irvine Lake. However, flow rejection should only occur during plant shutdown or transfer from Santiago Lateral to Irvine Lake supply.

Raw Water Conveyance System operation will require communication and analysis of flow rates at OC-33, Baker Raw Water Pump Station, the Flow Control Facility and

Feedwater Pump Station; hydraulic grades at the Baker Raw Water Pump Station and Feedwater Pump Station; and water surface level at Irvine Lake and the forebay for proper operation.

1.6.3 Treatment Process

Baker WTP will utilize pressure membrane filtration for treatment, and include pre-treatment and backwash waste water treatment / recovery for optimum plant production.

1.6.3.1 Pre-Treatment

Raw water pre-treatment will include the use of strainers and dosing of coagulant, upstream of the membrane filters. In addition, Irvine Lake water will introduce higher levels of iron and manganese in the raw water supply. As a result, chlorine dioxide will be dosed into Irvine Lake water upstream of forebay ensuring oxidation for removal by filtration.

1.6.3.2 Membrane Filtration

Pressure membrane filters will be installed in the treatment building for Baker WTP. The treatment process will be designed for a maximum raw water delivery of 43.5 cfs (28 mgd), and backwash waste water recovery.

1.6.3.3 UV Disinfection

UV disinfection will be located downstream of the pressure membrane filters to provide additional disinfecting primarily for Giardia inactivation, with all equipment contained within the treatment building.

1.6.3.4 Chloramination Disinfection

Secondary disinfection will be in the form of chloramination, with a CT Basin constructed adjacent to the treatment building.

1.6.3.5 Backwash Waste Water Treatment / Recovery

Backwash waste water will be collected from the feedwater strainer system and membrane filtration system for treatment and recovery. The recommended backwash treatment system is sedimentation with plate settlers constructed at an elevation

enabling water recovered from the sedimentation basin to flow to the raw water forebay by gravity.

1.6.4 Product Water Delivery

Treated or 'product' water from Baker WTP will flow by gravity from the CT basin to an existing on-site reservoir to serve as the clearwell. From the clearwell product water will be distributed by gravity or pumping. The clearwell and product water distribution system are describe further:

1.6.4.1 Clearwell

An existing 16 MG reservoir formerly operated by Los Alisos Water District as Zone 1 emergency storage will be modified for use as the Baker WTP clearwell.

1.6.4.2 Gravity Delivery

IRWD will be the only agency receiving product water by gravity. IRWD's capacity of up to 10.5 cfs (approximately 4,700 gpm) will be conveyed through the existing 24-inch outlet pipeline from the clearwell to the IRWD's Los Alisos Zone 1 system.

1.6.4.3 Product Water Pump Station

To deliver product water to all other Project stakeholders, a new pump station will be constructed to boost water from the clearwell to the Allen McColloch Pipeline. The pump station will have a design capacity of 33 cfs (approximately 14,800 gpm). The proposed capacity by agency is as follows:

- El Toro Water District – 5 cfs
- Moulton Niguel Water District – 13 cfs
- Santa Margarita Water District – 13 cfs
- Trabuco Canyon Water District – 2 cfs

1.6.4.4 Allen McColloch Pipeline

The Allen McColloch Pipeline (AMP) crosses the Baker site in parallel to the Baker Pipeline and immediately east of the new WTP. The pipeline will convey pumped flow from the clearwell to the Project Stakeholders.

Connection to the AMP will be made at the vault on the Baker site which was constructed during the Baker Pipeline / Allen McColloch Pipeline temporary inter-connection, when the AMP was being repaired.

1.7 PRELIMINARY DESIGN REPORT OBJECTIVES

The objectives of the Baker WTP Preliminary Design Report are:

- Definition of the overall Baker WTP concept
- Presentation of Preliminary Design analysis
- Economic evaluation, including capital and operation / maintenance costs, and product water cost comparison with imported water.

SECTION 2 SOURCE WATER, REGULATIONS AND TREATMENT OBJECTIVES

2.1 OVERVIEW

This section identifies the water sources for the Baker Water Treatment Plant Project, summarizes the quality of those sources, discusses the impact of existing and anticipated regulatory requirements, and details the product water quality goals.

2.2 RAW WATER SOURCES

Raw water sources for the Baker WTP include existing supplies and possible future sources. Existing sources of supply include imported water from Metropolitan Water District (MWD), Irvine Lake, and a possible future supplemental supply from IRWD's Lake Forest Well No. 1. Exhibit 2.1 shows the raw water sources.

2.2.1 Metropolitan Water District (Santiago Lateral)

MWD water will be the primary supply source for the Baker WTP. Imported water from MWD will be delivered through the Santiago Lateral to the Baker Pipeline at MWD's OC-33 turn-out. Imported water supply from MWD for Baker WTP will consist of a blend of Colorado River Water (CRW) and State Project Water (SPW).

The ratio of this blend has varied significantly in recent years, and can be anticipated to vary in the future. The composition of the blend from MWD depends upon the delivery of State Project Water, which can be limited based on drought conditions and environmental constraints. Each year the California Department of Water Resources sets a 'Table A Allotment' which determines the distribution of water through the State Project system. As a result of the recent drought and environmental constraints limiting SWP flow through the Bay Delta, the percentage of SPW was significantly reduced within the Lower Feeder and Santiago Lateral in 2008 and 2009. The reduction altered the percentage of SPW to CRW from, approximately 50% CRW:50% SPW in 2007, to 93% CRW:7% SPW in 2008.

(This Page Intentionally Left Blank)

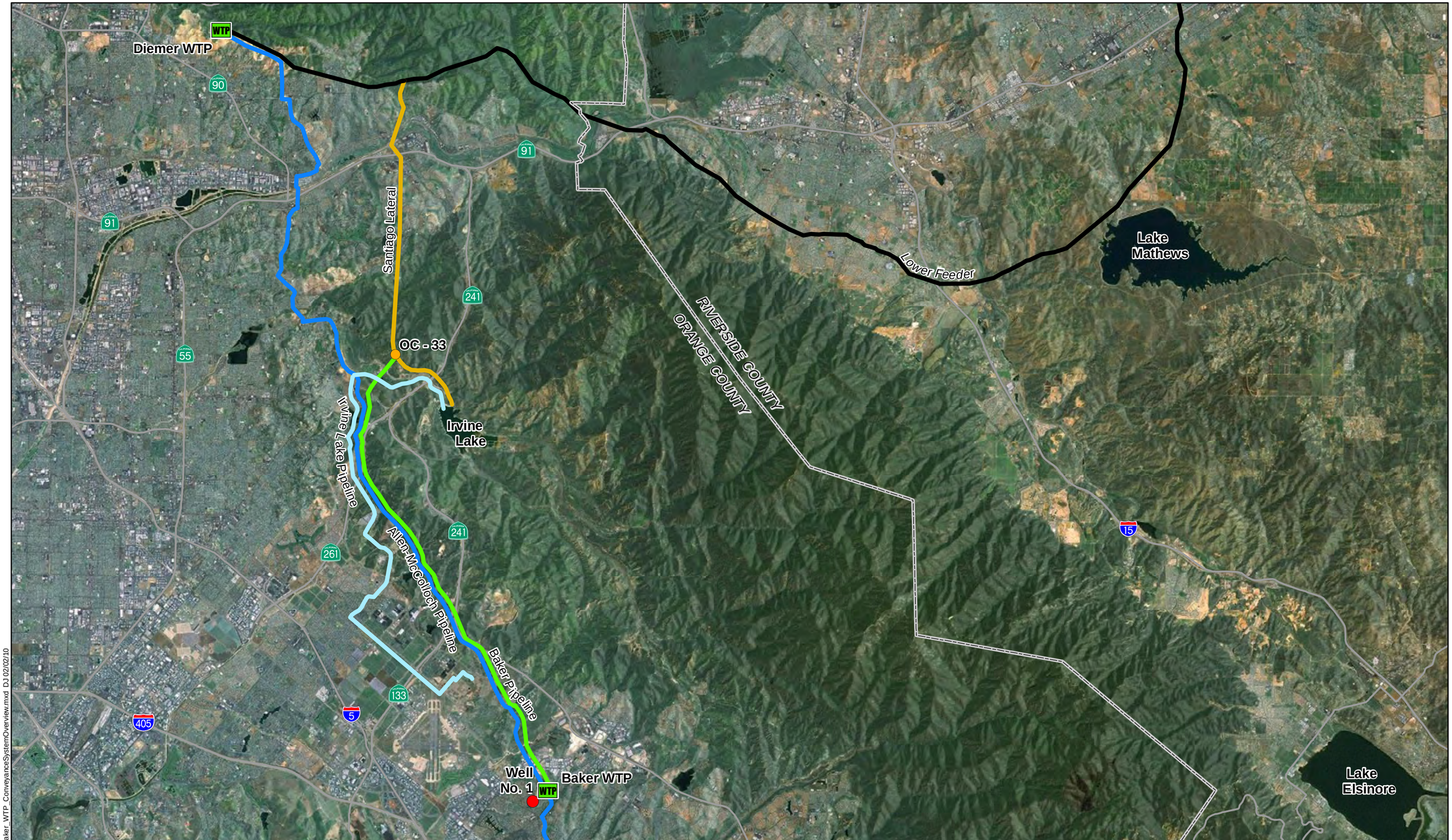

RBF CONSULTING GIS

carollo Engineers...Working Wonders With Water™

0 1 2 Miles

N S

Well No. 1
Allen-McColloch Pipeline
Baker Pipeline
Irvine Lake Pipeline
Lower Feeder
Santiago Lateral

Baker Water Treatment Plant Project

Raw Water Sources

Exhibit 2.1

m:\data\10106232\gis\Baker_WTP_ConveyanceSystemOverview.mxd DJ 02/02/10

In terms of treatment approach, SPW supply is a driver for a number of processes selected for the plant. Organic material in SPW is prone to chlorinated disinfection byproduct formation, specifically trihalomethanes (THM). Raw SPW and low CRW to SPW blends represent a worst case for meeting disinfection goals without exceeding applicable MCLs for THM, therefore for design purposes it is anticipated that imported water supply from MWD will be in the form of:

- 100% SPW, or
- 50% / 50% blend of CRW and SPW

2.2.2 Irvine Lake Water (ILW)

Water to Irvine Lake water is derived from two sources: MWD imported water via the Santiago Lateral, described above, and local run-off water captured from the Irvine Lake watershed.

Irvine Lake stores up to 28,000 AF and currently varies in depth from (EL.) 710 to 790 ft. Like any lake, Irvine Lake is subject to seasonal limnological phenomena. The phenomena include algae blooms which may produce additional fresh biologically derived organic carbon, and may increase coagulant demand while reducing filtration rates.

Algae blooms may also produce compounds that have a noxious taste and odor. These compounds may also be toxic and can be difficult to remove during conventional filtration and disinfection.

2.2.3 Lake Forest Well No. 1

Lake Forest Well No. 1 (owned and operated by IRWD) is a potential supplemental supply source for the Baker WTP. In the past, the well has been operated to supply to the Baker Filter Plant, local irrigation and make-up water for nearby community lakes. The current capacity of the well is estimated to be approximately 200 gpm (Boyle 2002).

A benefit/impact study was prepared by Carollo Engineers. The study recommended that, should water from Well No. 1 be used at the Baker WTP, it be added to the MF waste washwater equalization basin to allow for clarification and recirculation to the head of the plant. This approach also eliminates the need for constructing a well to waste system and utilizes the already planned facilities to handle solids with the sludge removal system. The study is provided as Appendix A.

Subsequent to this study, with the addition of the forebay, the recommendation has been revised to deliver Well No. 1 flows to the forebay. Accommodations will also be provided to deliver the flow to the CT basin, if accepted by California Department of Public Health.

2.3 ANTICIPATED RAW WATER QUALITY

An estimated range of raw water quality was prepared based on an understanding of the current and possible future raw water sources described above. The raw water quality estimate focused on parameters that will be critical to meet the anticipated product water quality.

The key raw water quality parameters for plant design and operation are:

- Total Dissolved Solids (TDS) - TDS levels in CRW can be as high as 700 mg/L, exceeding the secondary (recommended) maximum contaminant level (SMCL) of 500 mg/L. Though MWD had set a goal of 325 mg/L of TDS for delivery, there has not been adequate SPW available in recent years to blend CRW water below the SMCL of 500 mg/L. Product water TDS will be solely dependent on the blend provided by MWD.

- Total Organic Carbon (TOC) - TOC in SPW is known to have a strong tendency to form disinfection by-products (DBPs) when chlorine is used. The TOC level in ILW is comparable to the TOC level in SPW. To minimize DBPs, chloramines will be used as the residual disinfectant in the distribution system. Additional processes recommended to minimize DBP formation are in-line coagulation and UV disinfection.

- Temperature - Membrane system capacity decreases at low water temperatures due to higher water viscosity. The minimum water temperature used for design is 10° Celsius for the membrane system, since excursions below 10°C are uncommon. Historic low temperatures (4°C) will impact CT requirements for virus inactivation and have been taken into account in the CT basin design.

- Alkalinity – Alkalinity, including carbonate alkalinity, measures the highest in Irvine Lake Water.

- Hardness - The blending strategy to be implemented by MWD will dictate finished water hardness, since hardness removal is not a treatment goal for the Baker WTP. While hardness removal is not a treatment goal for the main

plant process, a softened carrier water system will be provided to avoid scaling caustic soda, sodium hypochlorite, and aqua ammonia diffusers.

- Turbidity - Raw water turbidity in CRW, SPW and ILW are low enough to accommodate direct filtration by membrane.

- Bromide - Bromide is primary to the formation of bromate and organohalide disinfection by-products. Chloramination will serve as the control strategy for bromate formation.

- Iron and Manganese - Neither is known to have detrimental health effects. However, they can be associated with unpleasant taste and odor, and staining of laundry and fixtures. Iron and manganese have a secondary MCL of 0.3 mg/L and 0.05 mg/L, respectively. Most significant to Baker WTP is the potential for dissolved forms to adversely impact membrane filtration (See Section 8 – Iron and Manganese Management). Chlorine dioxide will serve as the control strategy for iron and manganese oxidation.

A summary of raw water quality anticipated from the three primary source types is provided in Table 2.1.

Table 2.1 – Water Quality by Source[1]

Parameter	Unit	50% Colorado River Water (CRW) - 50% State Water Project (SPW)		100% State Water Project (SPW)		100% Irvine Lake (ILW)	
		Avg	Max	Avg	Max	Avg	Max
TDS	mg/L	470	565	248	430	575	640
TOC	mg/L	2.8	3.3	2.8	4.7	3.2	4.6
Temperature	°C	8 (min)	25	4 (min)	25	13 (min)	27
Hardness	mg/L as CaCO3	195	270	99	158	330[2]	--
Alkalinity	mg/L as CaCO3	100	115	72	98	160[2]	--
Turbidity	NTU	2.5	21	3.5	41	6	35
Bromide	mg/L	0.10	0.20	0.20	0.48	0.082	0.14
Total Iron	µg/L	ND[3]		ND		189	>300
Total Manganese	µg/L	ND		ND		35	>50

Notes:
1. Assumes the Baker WTP could receive 100% SPW to a blend of 50% SPW – 50% CRW or 100% ILW.
2. Two analyses only.
3. Non Detectable, typ.

2.4 CURRENT AND ANTICIPATED REGULATORY REQUIREMENTS

Baker WTP will provide water in adherence with current and pending rules and regulations regarding surface water treatment and disinfection by-products dictated by state and federal regulations.

2.4.1 California Department of Public Health (CDPH)

Current regulatory requirements for product water at the Baker WTP will be dictated by the CDPH, Division of Drinking Water and Environmental Management. The regulatory requirements are set forth in the California Code of Regulations, Title 22.

The CDPH drinking water standards are equivalent to or more stringent than national primary drinking water standards as established by the Environmental Protection Agency (EPA). Baker WTP will meet these standards as listed in Title 22 of the California Code of Regulations, and adhere to standards and best practices related to:

- Product water primary maximum contaminant levels (MCL)
- Product water secondary maximum contaminant level (SMCL)
- Public health goals (PHG)
- Water quality reporting
- Use of best available treatment technology

Title 22, Chapter 17 contains nine Articles pertaining directly to surface water treatment. Table 2.2 summarizes the pertinent Articles.

Table 2.2 – Title 22 Surface Water Treatment Articles

Article	Synopsis
1-General Requirements and Defintions	Establishes treatment techniques in lieu of maximum contaminant levels for turbidity and certain microbial contaminants. Provides definition of terms.
2-Treatment Requirements, Watershed Protection Requirements and Performance Standards	Provides multibarrier treatment requirements. Provides requirements for avoiding filtration. Provides requirements when filtration is necessary. Provides requirements for recycled flow. Provides disinfection requirements.
3-Monitoring Requirements	Provides monitoring requirements.
3.5-Enhanced Filtration and Disinfection	Provides enhanced requirements for systems serving at least 10,000 people.
4-Design Standards	Provides minimum design standards for surface water treatment processes.
5-Operation	Provides operator requirements.
6-Reporting	Provides reporting requirements to the SWRCB.
7-Watershed Sanitary Surveys	Provides requirements for sanitary surveys of the watershed, which must be completed every five years.
8-Public Notification	Provides requirements for notification of customers.

2.4.2 Long Term 2 Surface Water Treatment Rule

Baker WTP will treat surface water originating from MWD's lower feeder, a blend of CRW and SPW, or Irvine Lake. As a result, the Project will be subject to the Long Term 2 Enhanced Surface Water Treatment Rule (LT2ESWTR), a federal water treatment regulation established to define requirements for, and assess Crytosporidium removal.

In the case that source water is susceptible to Crytosporidium contamination, membrane filtration must meet three criteria for construction and operation.

1. The process must comply with the definition of membrane filtration as stipulated by the LT2ESWTR, and thus be a separation process with a maximum particulate size, physical barrier and demonstrated efficiency to the Environmental Protection Agency (EPA).

2. The removal efficiency of the membrane filtration process must be established through a product-specific challenge test and direct integrity testing. *Note: In California, third party challenge testing*

results need not be conducted at every site. Previous third party testing for the membrane filters under consideration for the Baker WTP will be used to meet this requirement.

3. The membrane filtration system must undergo periodic direct integrity testing and continuous indirect integrity monitoring during operation.

The total disinfection requirements for Giardia, virus, and Cryptosporidium are presented in Table 2.3. Dedicated disinfection processes must meet the balance of the disinfection requirements not met by membrane filtration (equivalent to 0.5-log Giardia inactivation and 4-log virus inactivation).

Table 2.3 – Summary of Regulatory Disinfection Requirements

	Required Log Reduction		
	Giardia	**Virus**	***Cryptosporidium***
Treatment Requirements			
Federal Treatment Requirements[1]	3.0	4.0	2.0[2]
Additional Requirements for Membrane Facilities[3]	1.0	0	2.0
Additional Disinfection Requirements[4]	0.5	0	0
Total Treatment Requirements	4.5	4.0	4.0
Membrane Filtration Credit	4.0	0.5-2.0[5]	4.0[6]
Disinfection Process Requirement	0.5	4.0[7]	0.0

Notes
1. Based on federal requirements in the Surface Water Treatment Rule, IESWTR and LT2ESWTR.
2. Based on results of *Cryptosporidium* source water monitoring program by the Serrano Water District on ILW (Bin 1).
3. Membrane facilities in California are currently required to be operated and maintained to achieve 4-log *Cryptosporidium* and *Giardia* removal.
4. California requires additional disinfection downstream of filters of 0.5 log *Giardia* or 4-log virus.
5. 0.5 for MF pressurized systems, 2.0 for UF ZW500d submerged system.
6. Based on full compliance with the IESWTR and LT2ESWTR.
7. Current membrane integrity testing methods cannot verify virus removal as required by the USEPA Membrane Filtration Guidance Manual. It is recommended that the District achieve virus inactivation though free chlorine disinfection.

2.4.3 Disinfection By-Products

Compliance with Stage 1 and 2 Disinfectants / Disinfection Byproducts Rule (D/DBPR), which establishes the maximum residual disinfectant goals for chlorine, chloramines, and chlorine dioxide, maximum contaminant level goals four trihalomenthanes (THM), two haloacetic

acids (HAA), bromate and chlorite according to the National Primary Drinking Water Regulations, and regulations for the State of California.

2.4.4 Potential (Future) Treatment Goals

The CDPH has established a notification level for three nitrosamines including N-nitrosodimethylamine (NDMA) at 0.01-µg/L. Other potential contaminants of concern including atrazine and 1,4 dioxane. These standards are not enforceable, and there is no data to suggest that these are specifically applicable to the sources water for the Baker WTP. Space has been reserved on site for construction of an advanced oxidation process (AOP) using medium pressure UV reactors and granular activated carbon. Section 15 provides a discussion of UV reactor selection and recommends low pressure high output system for this project.

2.4.5 Other Dedicated Treatment Requirements

In addition to the water quality and monitoring standards, CDPH Title 22, Chapter 17 mandates the treatment plant design and construction includes the following:

- Alarm devices to provide warnings of process failures
- Standby replacement equipment available to assure continuous operation and control of unit processes
- Continuous turbidity monitoring
- Multiple filter units which provide redundant capacity when filters are out of service for backwash or maintenance.

2.5 TREATMENT OBJECTIVES

The following requirements hold for treatment of surface water for Baker WTP:

- Daily effluent turbidity of <0.3 NTU in 95-percent of samples
- 4.5-log Giardia inactivation/removal
- 4.0-log Crytosporidium inactivation/removal
- 4.0-log virus inactivation/removal
- Iron and manganese removal

2.6 PRODUCT WATER QUALITY GOALS

Baker WTP will be designed with established minimum product water quality goals, based upon State of California Department of Public Health (DPH) standards, and additional project specific goals as described below.

2.6.1 Turbidity

Turbidity standards require that 95% of turbidity standards taken each month be less than 0.3 NTU, with a maximum of 1 NTU. Because membrane filtration will be used, performance requirements in the membrane procurement specification require filtered water turbidity to be less than 0.1 NTU 95% of the time with a maximum of 0.15 NTU.

2.6.2 Iron and Manganese

The three primary objectives of iron and manganese management are:

- Finished water with iron and manganese concentrations below their respective SMCL.
- Prevention of membrane fouling. Review of literature and troubleshooting of membrane plants suggests that an iron concentration as low as 0.05 mg/L and a manganese concentration as low as 0.02 mg/L is an appropriate target for these constituents in the membrane filtrate.
- Reasonable effort to minimize customer aesthetic complaints. Review of literature suggests that iron level as low as 0.1 mg/L and manganese level as low as 0.02 mg/L in the finished water could generate complaints.

Based on the above considerations, the following treatment goals were established

- Manganese level in MF feed water: 0.02 mg/L
- Iron level in MF feed water: 0.05 mg/L

2.6.3 Chlorine Dioxide

Chlorine dioxide used for iron and manganese control (see Section 8) must comply with the Maximum Residual Disinfectant Level (MRDL) of 0.8 mg/L in the finished water. However, a project specific limit of 0.2 mg/L will be met to prevent potting of the Pall membrane module.

2.6.4 Chlorite

Typically, the reaction of chlorine dioxide produces approximately 50 to 70 percent conversion of chlorine dioxide to chlorite (weight to weight basis). The MRDL for chlorite leaving the Baker WTP is 1.0 mg/L, resulting in the need to limit the chlorine dioxide dose to a maximum of 1.4 mg/L.

2.6.5 Disinfection Byproducts

Virus disinfection with free chlorine in source waters for the Baker WTP is anticipated to result in formation of Total Trihalomethane (TTHM) and Haloacetic Acids (HAA). In order to comply with related standards, goals of 64 μg/L for TTHM after free chlorine disinfection (80% of the MCL of 80 μg/L), and 48 μg/L of HHA (80% of the MCL of 60 μg/L) have been selected for the Baker WTP. This allows for additional formation of 10% to 15% in the distribution system following chloramination.

2.6.6 Total Chlorine

Chloramine concentration in the distribution system must be compatible with MWDSC's level, since the two sources will be blended in the AMP and could be blended in IRWD's system. Therefore, the minimum free chlorine residual at the end of the chlorine contact basin should be 2 mg/L.

Table 2.4 provides a summary of the project Product Water Quality Goals.

Table 2.4 – Product Water Quality Goals Summary

Constituent	Units	Goal
Turbidity	NTU	<0.3 NTU 95% of the time
Manganese	mg/L	<0.02 mg/L
Iron	mg/L	<0.05 mg/L
Chlorine Dioxide	mg/L	<0.2
Chlorite	mg/L	<1.0
TTHMs	μg/L	<64
HAA	μg/L	<48
Corrosivity		Non-corrosive
Total Chlorine	mg/L	2 mg/L

(This Page Intentionally Left Blank)

SECTION 3 RAW AND PRODUCT WATER CONVEYANCE HYDRAULICS

3.1 OVERVIEW

This section describes the hydraulic conditions for the facilities that feed the Baker WTP and deliver product water to customers. The facilities that were subjected to hydraulic analyses include both existing and proposed systems:

Raw (Untreated) Water Facilities

- MWD facilities, including the Santiago Lateral and OC-33 turnout,
- Existing raw water facilities, including the Baker pipeline, Irvine Lake, and Irvine Lake Pipeline, and
- Proposed raw water facilities, including the Raw Water Pump Station, flow control facility, forebay, and Feed Water Pump Station.

Baker Water Treatment Plant

Product (Finished) Water Systems

- Clearwell,
- Product Water Pump Station, and
- The Allen McColloch pipeline.

Included are descriptions of existing and proposed facilities, system operation, and overall project hydraulics.

3.2 MWD SYSTEM

MWD delivers State Project and Colorado River Water through the Lower Feeder to the Santiago Lateral. The Santiago Lateral supplies the Baker Pipeline through the OC-33 turn-out located north of Irvine Regional Park. Exhibit 3.1 provides an overview of the pipelines that will influence hydraulics to the Baker WTP Project.

3.2.1 Santiago Lateral

The Santiago Lateral is a pipeline of approximately 8.7 miles in length, ranging in diameter from 72-inch at its upstream end, to 48-inch at its terminus in Irvine Lake. The pipeline receives State Project and Colorado River Waters from MWD's Lower Feeder. The Santiago Lateral was

constructed, by MWD, in 1956, to deliver raw water to the City of Anaheim and several water districts. Currently, the active service connections on the lateral are:

- A-08 serves 23 cfs to the City of Anaheim's Walnut Canyon Reservoir and Water Treatment Plant.
- OC-33 supplies a current capacity of 40 cfs to the Baker Pipeline.
- OC-13 is an in-line meter on the Santiago Lateral that conveys up to 100 cfs to Irvine Lake

The design capacity of the pipeline, at its headworks (Santiago Control Tower) on the Lower Feeder, is 150 cfs. The capacity is reduced to 100 cfs about halfway along its length, and continues at this capacity to Irvine Lake. In 2002, MWD performed a flow test for the Santiago Lateral and concluded that the flow through OC-13 should be limited to 100 cfs. During the test, flows at A-08 and OC-33 were 20 cfs and 19 cfs, respectively.

Releases into the Santiago Lateral originate at the Santiago Control Tower. The Santiago Control Tower communicates with the Olinda Pressure Control Facility located downstream of the control tower on the Lower Feeder. When the water surface level, in the control tower, moves outside of the preset range (962 feet to 966 feet) the Olinda facility either reduces or increases the flow in the Lower Feeder, as necessary, in order to maintain the preset range (HGL) in the tower.

There are two sectionalizing valves on the Santiago Lateral – one just downstream of the Venturi meter, near the tower, and another at the upstream end of the Santiago Tunnel. The former valve is not used to regulate flow, whereas the valve at the tunnel is sometimes throttled to control flow to OC-33 (described below) and OC-13 (turn-out to Irvine Lake). Downstream of the tunnel, flow in the pipeline is unregulated, and cascading flow occurs at several locations when the flow to the lake is insufficient to raise the HGL, in the lateral, above the pipeline's summits.

Exhibit 3.2 shows the pipe and hydraulic profiles of the Santiago Lateral.

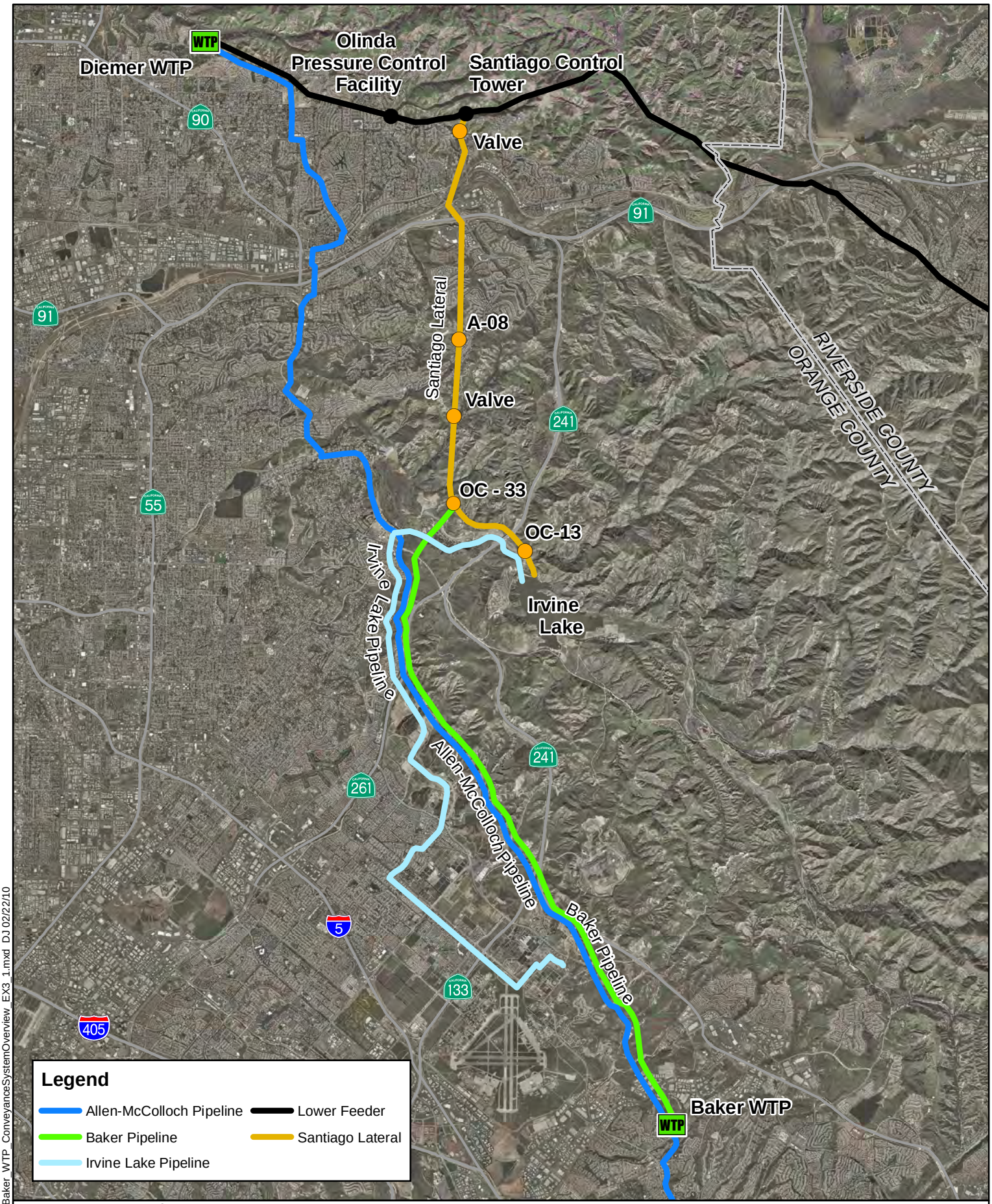

m:\mdata\10106232\gis\Baker_WTP_ConveyanceSystemOverview_EX3_1.mxd DJ 02/22/10

RBF CONSULTING GIS

carollo
Engineers...Working Wonders With Water™

N
S

0 1 2
Miles

Baker Water Treatment Plant Project

Conveyance System Overview

Exhibit 3.1

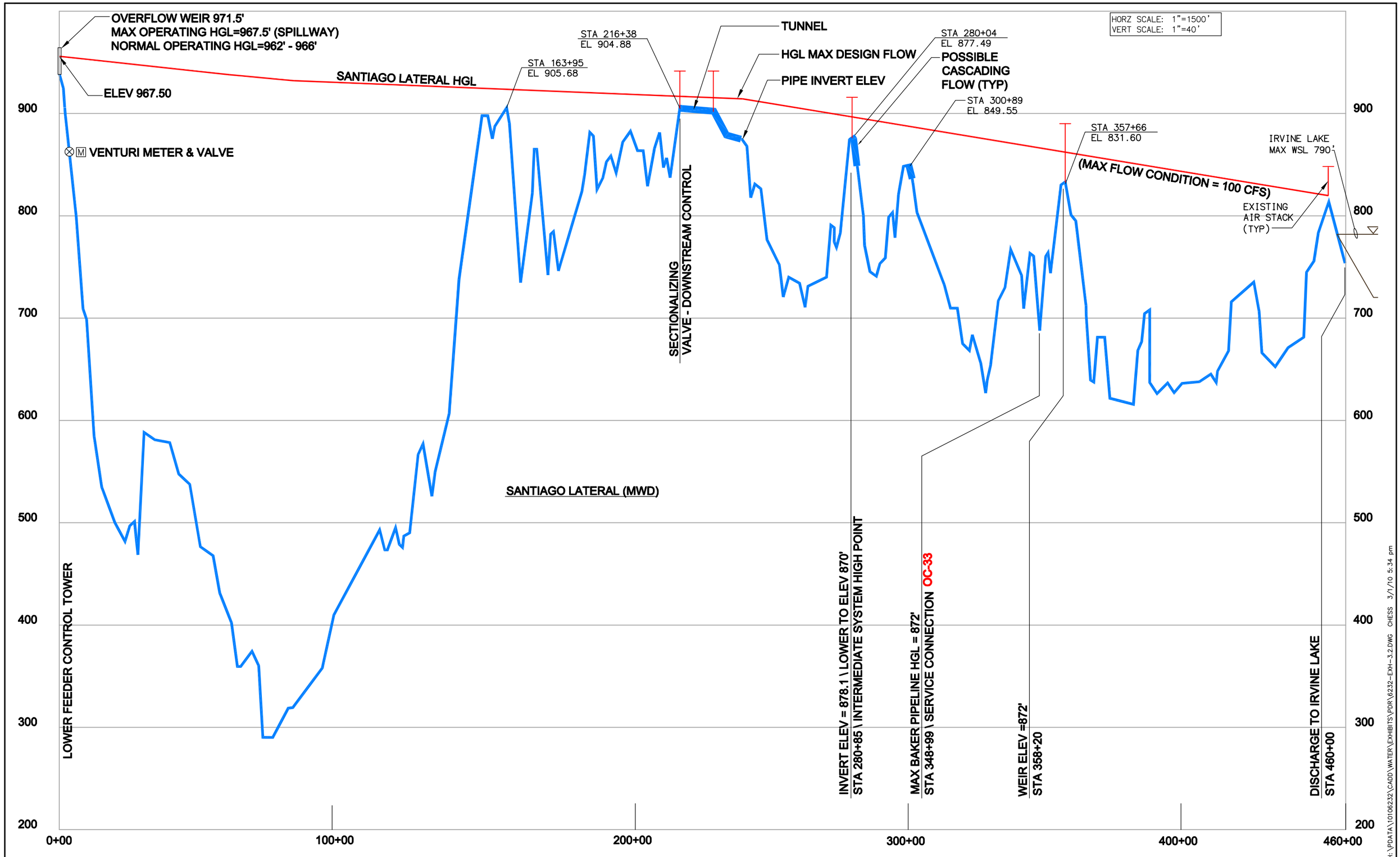

H:\PDATA\10106232\CADD\WATER\EXHIBITS\PDR\6232-EXH-3.2.DWG CHESS 3/1/10 5:34 pm

RBF CONSULTING

carollo

IRVINE RANCH WATER DISTRICT

BAKER WATER TREATMENT PLANT

SANTIAGO LATERAL PROFILE

EXHIBIT 3.2

3.2.2 OC-33

OC-33 is the turn-out from the Santiago Lateral to the Baker Pipeline. The turn-out currently has a flow meter rated up to 40 cfs. OC-33 was once equipped with a flow meter capable of measurement up to 100 cfs. When flow rates declined in the Baker Pipeline, the Santiago Aqueduct Commission elected to replace the meter with a smaller one to achieve increased accuracy. Increased flows through the turn-out, as a result of Baker WTP, may require modifications to the turn-out, as discussed in Section 4.

3.3 EXISTING RAW WATER CONVEYANCE FACILITIES

Existing raw water facilities downstream of the Santiago Lateral are illustrated on Exhibit 3.1 and include:

- Baker Pipeline
- Irvine Lake
- Irvine Lake Pipeline

3.3.1 Baker Pipeline

The Baker Pipeline, originally named the Santiago Aqueduct, was constructed in 1962 by the Santiago Aqueduct Commission to provide untreated Colorado River water to several water districts and agricultural interests in central Orange County. In recent years, MWD has delivered a blend of Colorado River Water and State Water Project Water to the Baker Pipeline.

3.3.1.1 Hydraulics

The Baker Pipeline was designed to operate with downstream control, and, structurally, to withstand a maximum HGL of 872 feet. An HGL of 872 feet can only be realized when the discharge to Irvine Lake, through the Santiago Lateral, is 100 cfs. The HGL in the Santiago Lateral at OC-33 is fixed at its maximum by the elevation of a high point in the Santiago Lateral immediately downstream of OC-33. It is impossible to develop a higher HGL (i.e., > 832 feet) at this point without discharging to Irvine Lake; thereby limiting the Baker Pipeline to a flow rate below its potential. The maximum HGL achievable at this point (i.e. 872 ft) occurs with maximum flow in the lateral (i.e., 100 cfs). When there is less flow, the HGL

diminishes until it reaches approximately 832 feet, at which point there is no discharge to Irvine Lake. A profile of Baker Pipeline and hydraulic profile is provided in Exhibit 3.3.

3.3.1.2 Flow Test

Irvine Ranch Water District and RBF Consulting completed a flow test of the Baker Pipeline on April 21, 2009 to evaluate its hydraulic performance. Flow in the Baker Pipeline was controlled during the test at the Baker site by a temporarily installed butterfly valve on the 20- / 24-inch pipeline that served the former Baker Filter Plant. At 15-minute intervals during the 4-hour test, flow readings were taken at OC-33 and the Baker site, and pressure readings were taken at the Irvine Lake Pipeline / Baker Pipeline turnout, Baker site, and selected high points (air valve locations) along the Baker Pipeline.

3.3.1.3 Flow Test Analysis

The flow test results were used to determine a representative Hazen Williams C Factor for the Baker Pipeline. It was observed that valve modulation (both opening and closing the 24-inch butterfly valve) significantly impacted pressure and flow values at the beginning and end of the flow test. As a result, focus in the calculations was placed on flow test results from 9:55 am to 10:55 am, as shown on Exhibit B1 of Appendix B.

Based on the flow test results, a Hazen Williams factor of 140 was selected to predict friction losses in the Baker Pipeline. Exhibit B2 in Appendix B depicts the results of the flow test against various values of the Hazen Williams factor.

3.3.1.4 Capacity Rights

The Baker Pipeline capacity is physically dependent on hydraulics, and institutionally limited by capacity rights allocated by agreement. In October 2009, Irvine Ranch Water District and RBF / Carollo completed efforts to determine the proposed reallocation of water rights through the Baker Pipeline. The efforts focused on pipeline hydraulics to

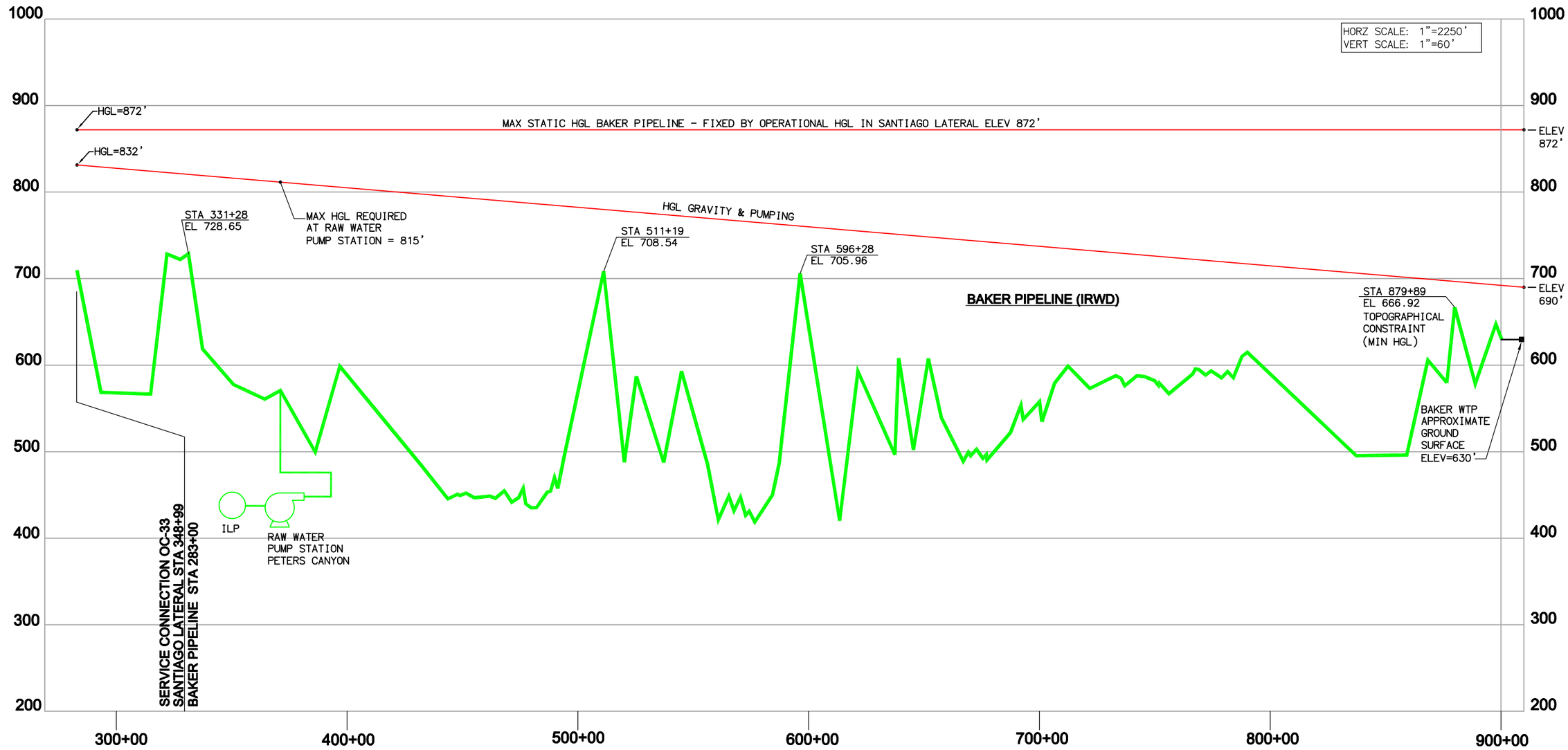

OPERATING CONDITION MAX DESIGN FLOW
BAKER WTP - 43.5 CFS TRABUCO WTP - 6 CFS AGRICULTURAL - 4 CFS

H:\PDATA\10106232\CADD\WATER\EXHIBITS\PDR\6232-EXH-3.3.DWG CHESS 3/1/10 5:39 pm

RBF CONSULTING

carollo

IRVINE RANCH WATER DISTRICT

BAKER WATER TREATMENT PLANT

BAKER WATER TREATMENT PLANT
BAKER PIPELINE PROFILE

EXHIBIT

3.3

maximize plant flow and minimize the transfer of capacity rights in Reaches 1 through 5. Two alternative capacities of raw water supply to Baker WTP were recommended:

- 37 cfs – considering the use of available head for pressure membrane filtration, requiring an HGL of 720 feet at the Baker WTP
- 43.5 cfs – considering the use of a forebay reservoir and pump station, requiring an HGL of 690 feet

Cost analysis of each alternative was presented at the Project Stakeholder's meeting held on October 29, 2009. With Project Go-No-Go Decision 1 the Stakeholders selected the higher (43.5 cfs) flow alternative as the basis for treatment plant design.

3.3.2 Irvine Lake

Irvine Lake (also referred to as the Santiago Reservoir) was built in 1931 to serve nearby agricultural demands. The lake is currently supplied by State Project and Colorado River waters delivered by Metropolitan Water District through the Santiago Lateral and OC-13. The lake has a maximum capacity of approximately 28,000 acre-feet. From the 2007 Feasibility Study it is understood that the lake captures an average of approximately 7,000 acre-feet of local runoff per year. A summary of the water storage (capacity) and surface area is provided as Exhibit 3.4. Throughout the upper WSLs (750 – 790 ft) of Irvine Lake, approximately 5,000 AF is contained within each 10 ft band. This is the approximate quantity of water that is expected to be withdrawn from the lake over a 6 to 8 week period on an annual basis.

Delivery of Irvine Lake water to the Baker WTP will provide reliability, in the event of an emergency or maintenance caused outage along the Santiago Lateral or the Lower Feeder. In the event that it should become necessary to curtail or limit service to OC-33, Irvine Lake can be used as a raw water source for the Baker WTP, either replacing or supplementing the MWD supply.

Water is transferred from Irvine Lake into the Irvine Lake Pipeline through the Irvine Lake Outlet Tower. The tower is 8 ft in diameter and is controlled by using the upper gates (24-inch gates) at elevations of 720,

730, 740 and 750 ft. All lower gates (30-inch gates) are buried under lake sediments. To maintain long-term operation of the tower and improve water quality in the Irvine Lake Pipeline, an extension to the 720 gate was installed to raise the inlet elevation to 735 ft. Irvine Ranch Water District has also considered an extension to the 710 gate. However, the extension has been put on hold pending seismic evaluation of the tower as required by the Division of Safety of Dams.

Each of the gates is equipped with a Johnson screen with the following characteristics:

- "T" shape configuration
- 30-inch diameter
- 96-inch length
- Slot opening = 0.50"
- 79.6% open area
- Collapse strength = 10' of water
- Material – 304 SS

Johnson recommends that the maximum through-slot velocity of the screens be 0.5 fps which will produce a per-screen capacity of 11.25 cfs. However flows up to 22.5 cfs per screen can be achieved with a through-slot velocity of 1.0 fps although increased fouling will result. Therefore, at the lower flow rate, the outlet tower could release 45.0 cfs, and at the higher flow rate – a maximum of 90.0 cfs (if screens fully clean).

3.3.3 Irvine Lake Pipeline

The Irvine Lake Pipeline (ILP) originates at Irvine Lake and conveys water from the lake's outlet works through a pipeline of varying diameters over a total length of about 65,000 feet to its terminus near Lambert Reservoir north of the former El Toro Marine Corps Air Station. The pipeline was constructed to serve agriculture demands, through three reaches:

- The Irvine Lake Reach extends from Irvine Lake to Peters Canyon Reservoir.
- The Rattlesnake Reach extends through the Cities of Orange, Tustin and Irvine before terminating near the Rattlesnake Reservoir in the North Irvine area.

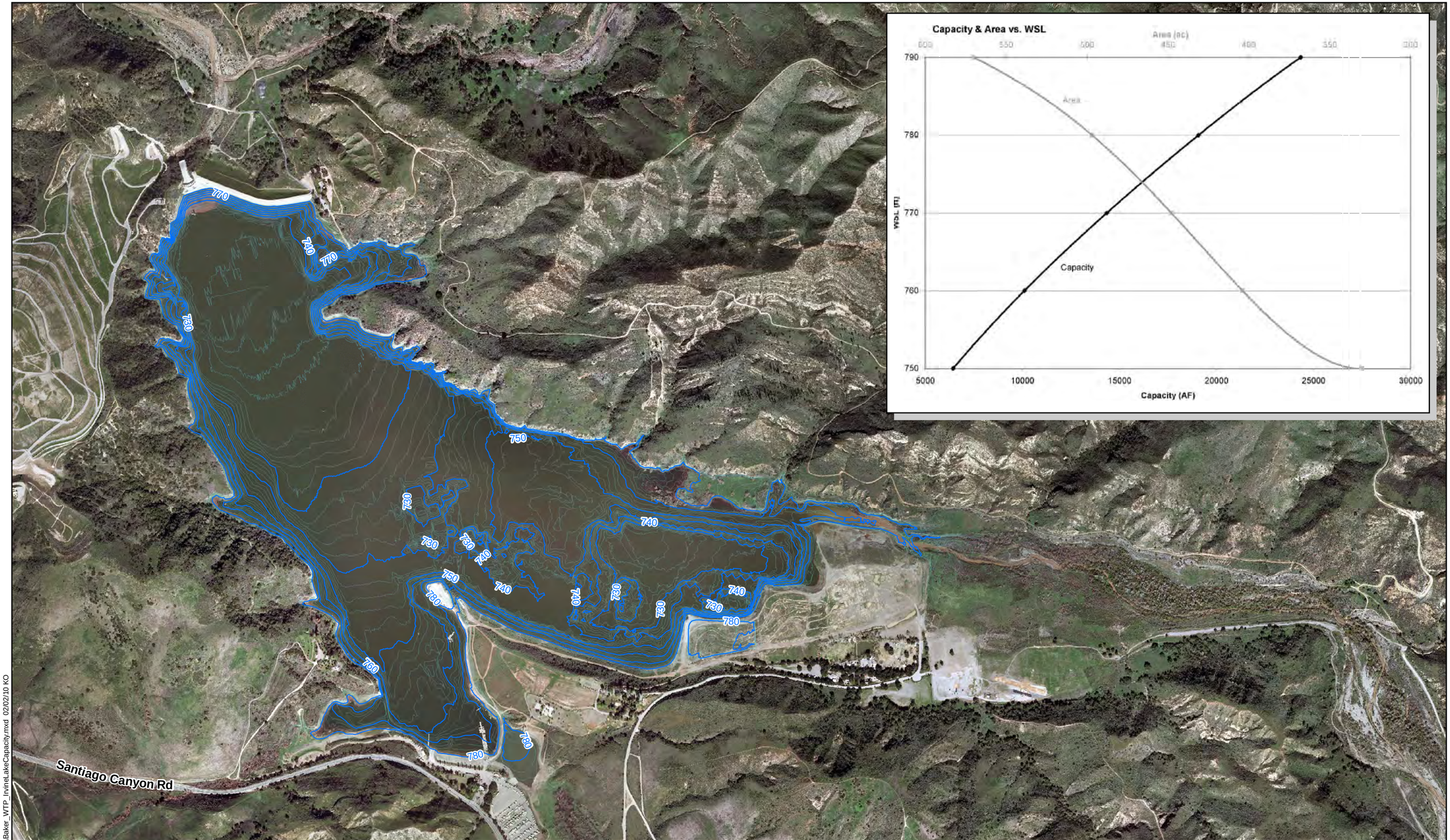

M:\Mdata\10106232\GIS\Baker_WTP_IrvineLakeCapacity.mxd 02/02/10 KO

RBF CONSULTING GIS

carollo Engineers...Working Wonders With Water™

0 0.25 0.5 Miles

N S

Baker Water Treatment Plant

Irvine Lake and Capacity

Exhibit 3.4

- The Lambert Reach is under evaluation to determine the date at which it will be separated and utilized as part of the Zone C recycled water system.

The capacity to be delivered through the Irvine Lake Pipeline during Baker WTP operation is under analysis by IRWD and RBF Consulting with consideration of:

- Outlet Tower capacity – when the screens are mostly clear of debris IRWD has measure flows between 60 and 70 cfs in the upper reach of the ILP,
- Current and future agriculture demands on the Irvine Lake Pipeline and Baker Pipeline,
- Supply to Serrano Water District and Trabuco Canyon Water District.

The above listed factors may cumulatively limit the raw water flow to the Baker WTP when supplied from Irvine Lake to less than 43.5 cfs. However, for the PDR the capacity of the Raw Water Pump Station is maintained as 53.5 cfs (43.5 cfs for Baker WTP, 4 cfs for Baker Pipeline served agriculture, 6 cfs for TCWD), as a conservative basis for Project costs. Additional evaluation is required to quantify these impacts.

3.4 PROPOSED RAW WATER CONVEYANCE FACILITIES

The proposed raw water conveyance facilities include all facilities to be constructed to enable delivery of untreated water from Santiago Lateral or Irvine Lake Pipeline to the Baker WTP.

3.4.1 Alternative Facilities Considered

The approach to delivering raw water to the treatment plant has been studied by weighing factors such as:

- Capital Cost
- Lowest Energy Use
- Surge Protection
    - Baker Pipeline
    - Treatment Plant
- Ease of Operation

- Land Acquisition

Several alternative facilities were considered in developing the proposed concept for the raw water conveyance system. Appendix C describes the facilities previously considered, including a hydraulic control structure, regulating reservoir and constant head tank.

3.4.2 Proposed Facilities

The facilities to be constructed to enable raw water delivery to the Baker WTP include:

- Raw Water Pump Station - a pump station constructed to boost water from the Irvine Lake Pipeline to the Baker Pipeline, with a maximum design flow rate of 53.5 cfs (24,000 gpm).
- Flow Control Facility – at the terminus of the raw water pipeline, the flow control facility consists of a motor operated sleeve valve to control the flow into the forebay. A redundant sleeve valve is included in the cost estimate.
- Forebay - a 0.785 MG partially buried, cast-in-place concrete reservoir to isolate the hydraulics / surge of the Baker Pipeline and treatment plant systems, and to provide flow equalization between the constant flow rate of raw water delivery in the Baker Pipeline, and variable flow rate of the treatment plant due to operation (backwashing and integrity testing).
- Feedwater Pump Station - vertical turbine pumps to boost water from the forebay through the pressure membranes. Pumps will have variable speed drives to manage variable flow rates through the treatment process, and maximum and minimum discharge pressure based on the acceptable range of pressure upstream of the membrane filters.

3.5 RAW WATER SYSTEM OPERATION

There are two methods (gravity and pumping) for the conveyance of raw water to the Baker WTP. These methods comprise a total of six operational schemes, which are summarized in Table 3.1. Exhibits 3.5 shows the overall system under gravity and pumping conditions. Exhibits 3.6 (gravity operation) and 3.7 (pumping operation) depict all methods of water conveyance as described and defined in Sections 3.5.1 and 3.5.2.

TABLE 3.1
BAKER WATER TREATMENT PLANT
RAW WATER CONVEYANCE OPERATIONAL SCHEMES

CONVEYANCE METHOD	OPERATIONAL SCHEME	Water Source	Santiago Lateral		Baker P/L Flow	ILP Flow	Comments
			Flow	Flow to Lake			
GRAVITY	**Gravity - Normal Operation**	**Santiago Lateral**	Yes	Possible - but not required	OC-33 to WTP	No	Flow to Irvine Lake may increase HGL at OC-33 to Max = 872'
	Gravity - Combined Baker P/L and ILP	**Santiago Lateral & Irvine Lake**	Yes	Possible - but not required	OC-33 to WTP	From Irvine Lake to RWPS and downstream	Requires high WSL in Irvine Lake & reduced flow through OC-33. Blending at RWPS.
	Gravity Transfer - Baker P/L to ILP	**Santiago Lateral**	Yes	May be required	OC-33 to RWPS to ILP	Downstream of RWPS	Flow to lake may be required in order to develop high HGL in Santiago Latral and full flow to WTP
	Gravity Transfer - ILP to Baker P/L	**Irvine Lake**	No	Unlikely	RWPS to WTP	From Irvine Lake to RWPS and downstream	No flow through OC-33
PUMPING	**Pumping - Normal Operation**	**Irvine Lake**	Unlikely		RWPS to WTP	From Irvine Lake to RWPS and downstream	No flow through OC-33. WSL in Irvine Lake greater than 740'
	Pumping - Combined Baker P/L (gravity) and ILP (RWPS feed)	**Santiago Lateral & Irvine Lake**	Yes	Unlikely	Gravity from OC-33 blending with ILP water pumped by RWPS to Baker P/L	Yes	Blended Irvine Lake and Santiago Lateral waters. WSL in Irvine Lake greater than 740'

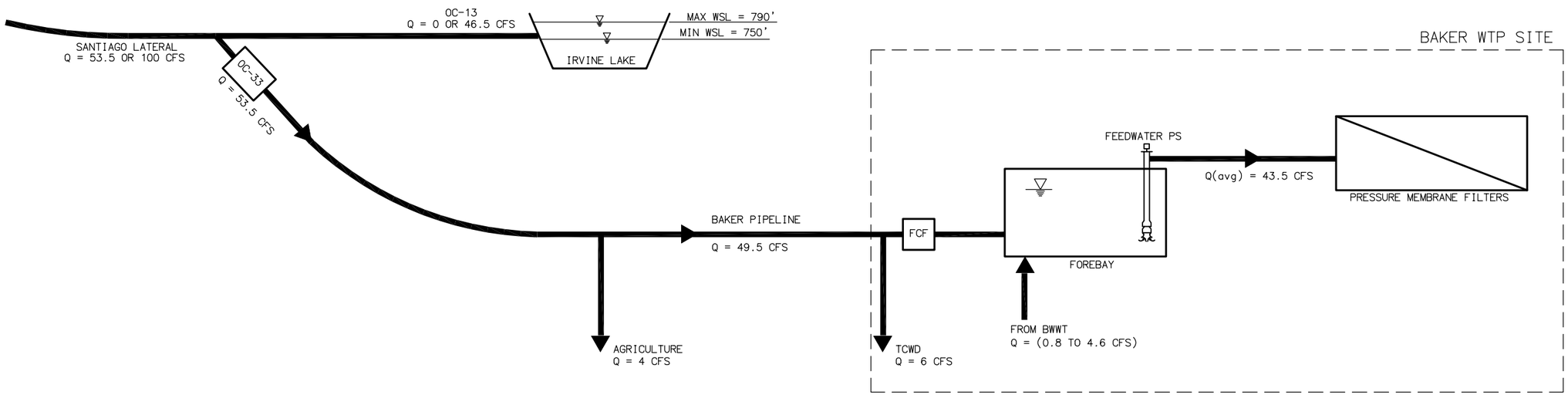

GRAVITY- SANTIAGO LATERAL SUPPLY TO BAKER WTP

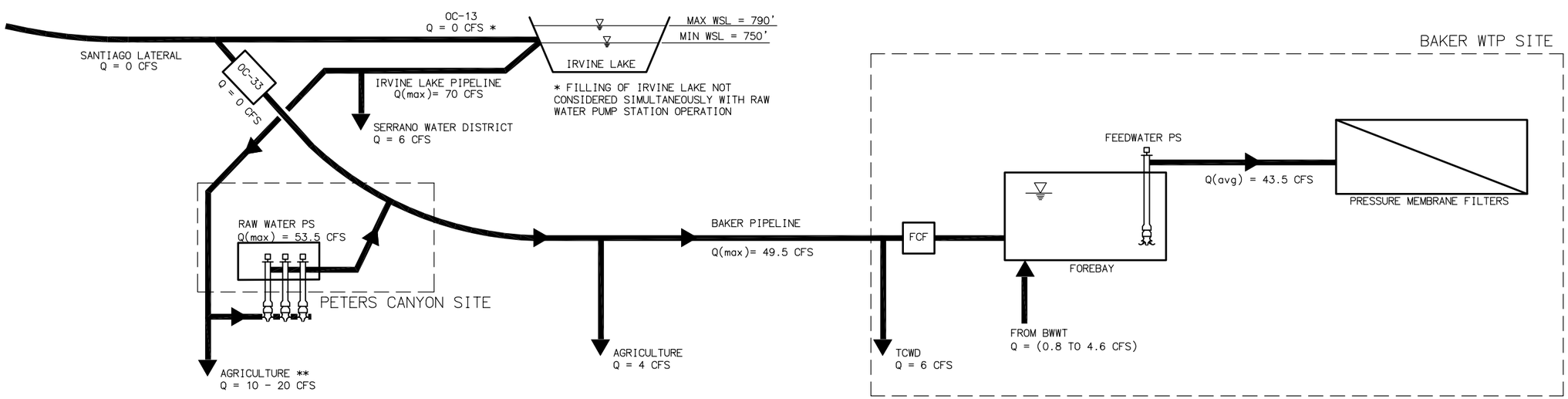

PUMPING - IRVINE LAKE WATER SUPPLY TO BAKER WTP

H:\PDATA\10106232\CADD\WATER\EXHIBITS\PDR\6232-EXH-3.5.DWG CHESS 4/8/10 5:38 pm

RBF CONSULTING

carollo

IRVINE RANCH WATER DISTRICT

BAKER WATER TREATMENT PLANT

RAW WATER CONVEYANCE SYSTEM OPERATION SUMMARY

EXHIBIT

3.5

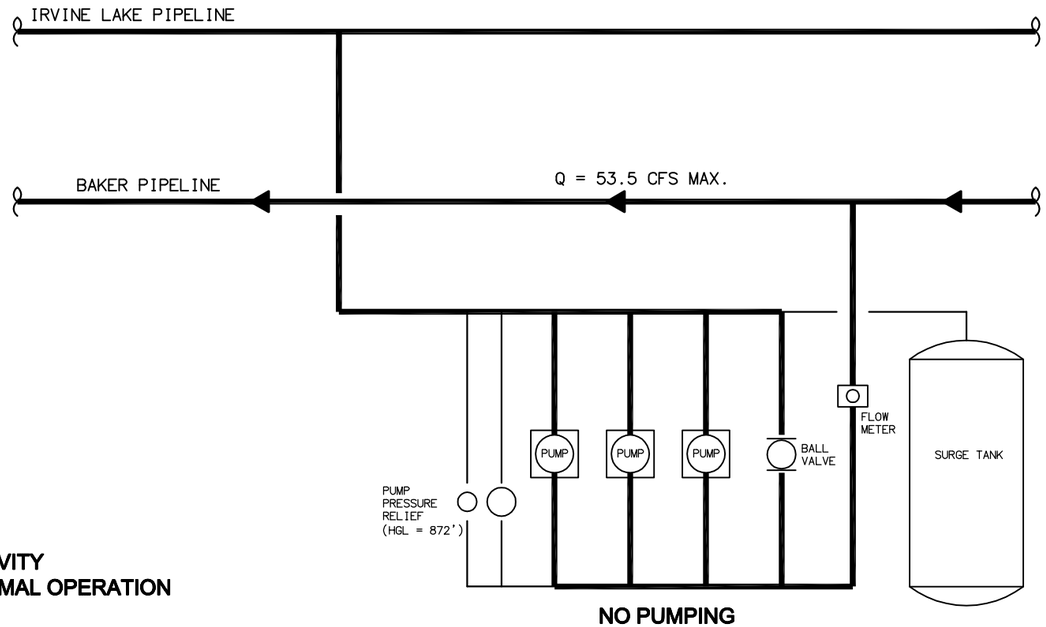

GRAVITY
NORMAL OPERATION

NO PUMPING

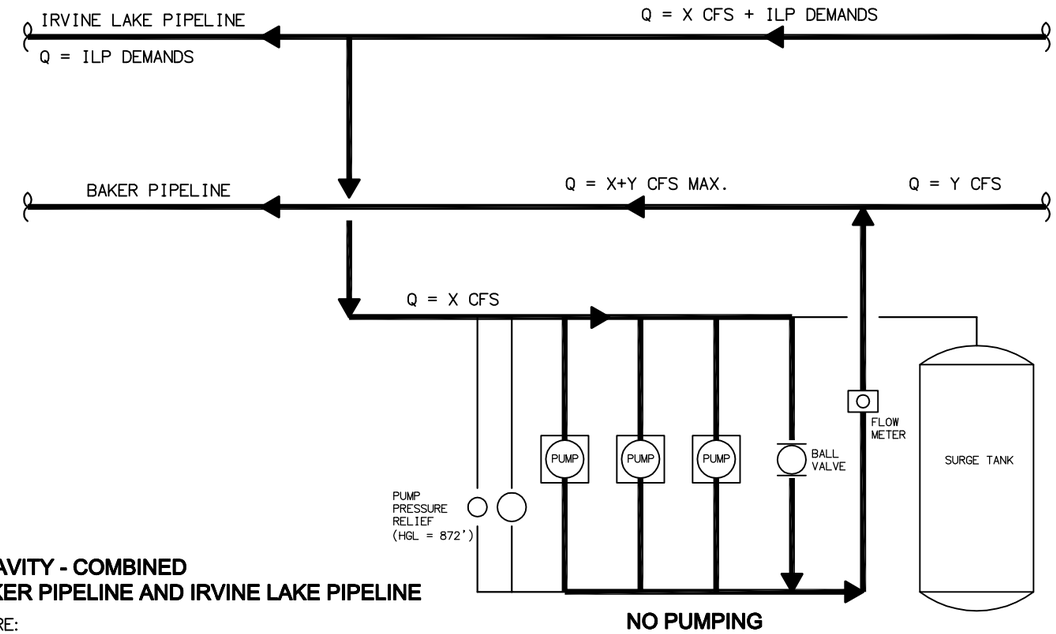

GRAVITY - COMBINED
BAKER PIPELINE AND IRVINE LAKE PIPELINE

WHERE:
X CANNOT EXCEED 42.5 CFS
Y CANNOT EXCEED 53.5 CFS
X+Y CANNOT EXCEED 53.5 CFS

NO PUMPING

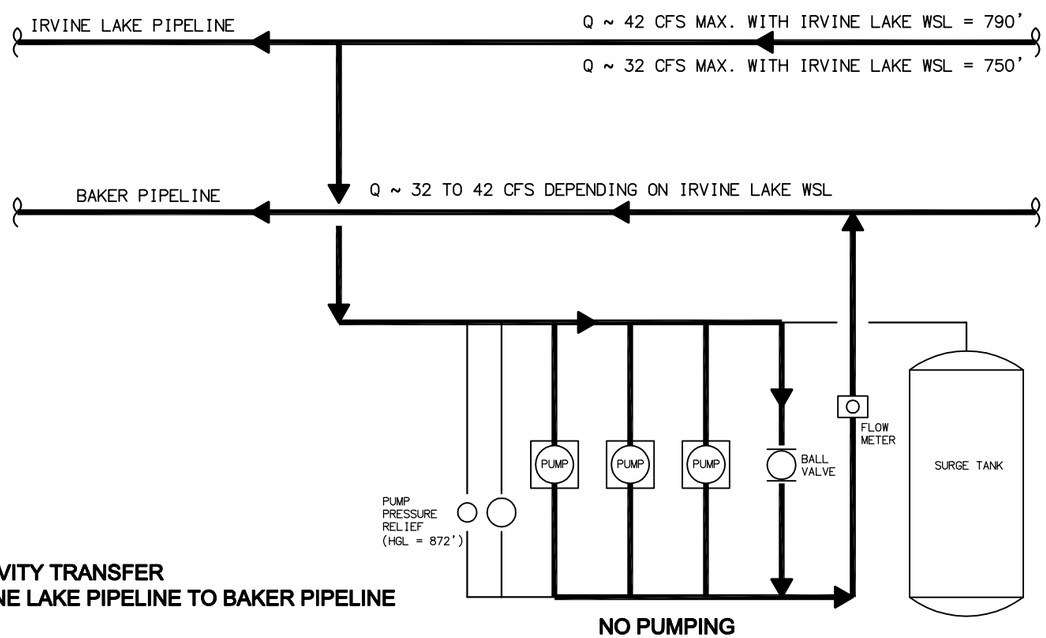

GRAVITY TRANSFER
IRVINE LAKE PIPELINE TO BAKER PIPELINE

NO PUMPING

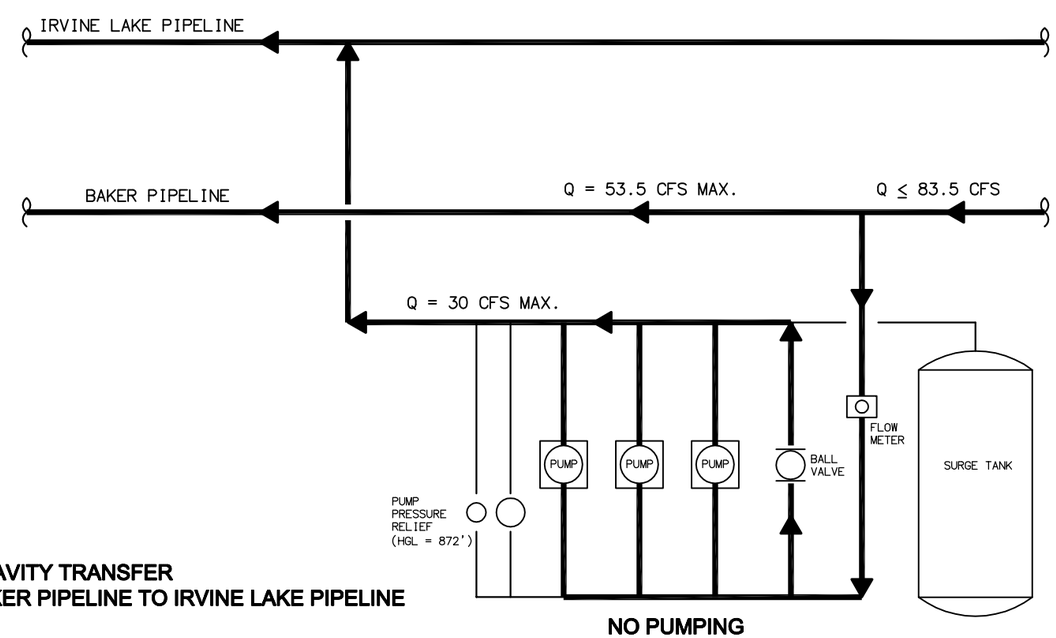

GRAVITY TRANSFER
BAKER PIPELINE TO IRVINE LAKE PIPELINE

NO PUMPING

H:\PDATA\10106232\CADD\WATER\EXHIBITS\PDR\6232-BAKER-EXH-3.6REV.DWG CHESS 4/8/10 5:40 pm

RBF CONSULTING

carollo

IRVINE RANCH WATER DISTRICT

BAKER WATER TREATMENT PLANT

RAW WATER PUMP STATION
GRAVITY OPERATION SCHEMATIC

EXHIBIT
3.6

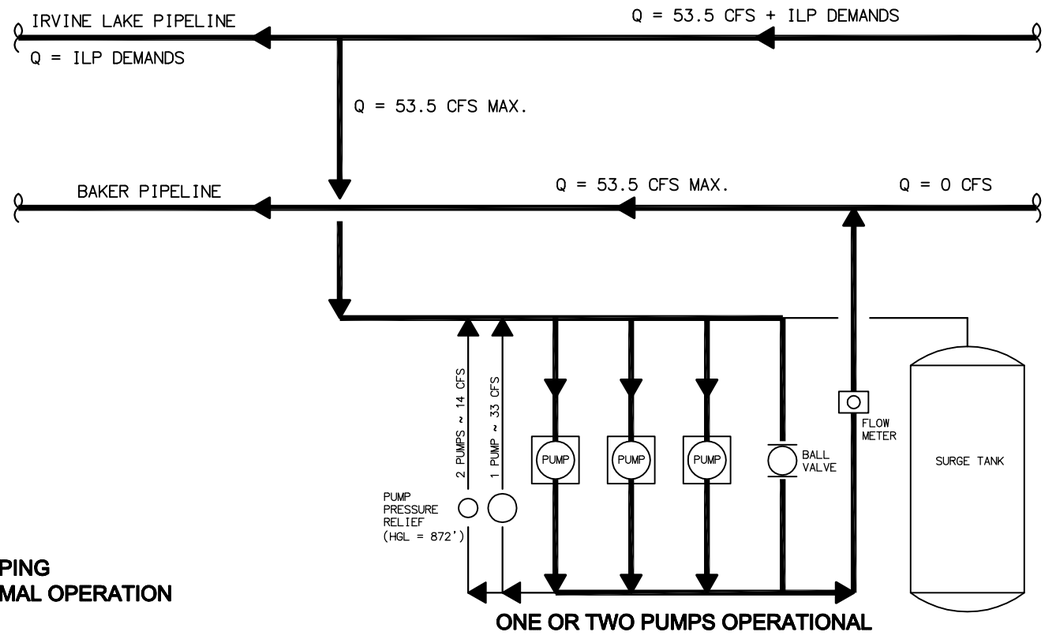

PUMPING
NORMAL OPERATION

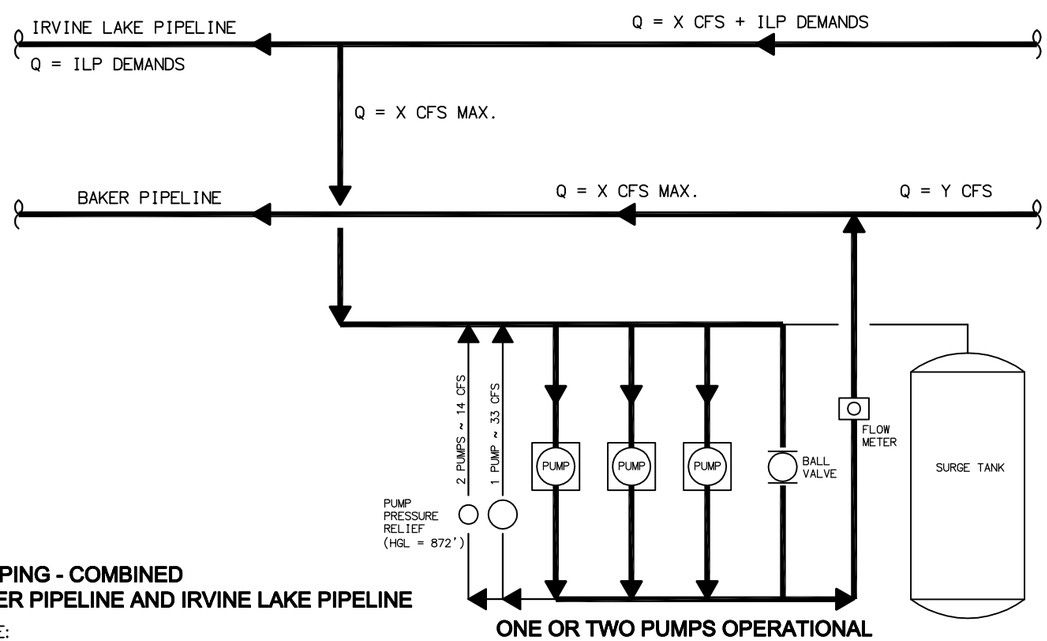

PUMPING - COMBINED
BAKER PIPELINE AND IRVINE LAKE PIPELINE

WHERE:
X CANNOT EXCEED 42.5 CFS
Y CANNOT EXCEED 53.5 CFS
X+Y CANNOT EXCEED 53.5 CFS

H:\PDATA\10106232\CADD\WATER\EXHIBITS\PDR\6232-EXH-3.7REV.DWG CHESS 4/8/10 5:41 pm

RBF CONSULTING

carollo

IRVINE RANCH WATER DISTRICT

BAKER WATER TREATMENT PLANT

RAW WATER PUMP STATION
PUMPING OPERATION SCHEMATIC

EXHIBIT
3.7

3.5.1 Gravity Conveyance

The majority of the time (i.e. ten to eleven months annually) raw water will be conveyed to the Baker WTP, directly from the MWD system, by gravity, through the Baker Pipeline. No intermediate storage facility will be involved, between the MWD system and the forebay at the Baker WTP. Gravity conveyance includes four possible operational schemes as described below.

Gravity - Normal Operation

This will consist entirely of Santiago Lateral gravity supply, through OC-33, to the Baker WTP, agricultural users and TCWD, through the Baker Pipeline. No pumping.

The flow through OC-33 and the Baker Pipeline (Gravity-Normal Operation – See Table 3.1) will be controlled by:

- MWD releasing Lower Feeder water, into the Santiago Lateral, on a daily basis, at the flow rates requested by IRWD through MWDOC.
- Instantaneous control through operation of the 18-inch sleeve valve upstream of the Baker WTP forebay.

Under conditions when the plant's output is being maintained at a constant daily rate, any flow swings will be absorbed by the forebay, and there should be no discharge of water to the lake or overflows to the stormwater system, at the plant.

Since the water released by MWD is generally not variable, variation of Baker Pipeline flow and plant demand, ranging from daily to instantaneous, will be absorbed by one or a combination of the following:

- Flows, in Baker Pipeline, in excess of plant demand, will occur daily as a result of variable flow through the pressurized membranes due to backwashing or maintenance. Such flow variations are accounted for in the design capacity of the forebay,
- As a less desired alternative, excess water that cannot be handled in this manner will first result in modification of flow rate from the feedwater pump station, and if still unresolved thereafter, will lead to the reduction of flow to the plant by closing the sleeve valve at the flow control facility to divert excess raw water flow to Irvine Lake. See

Section 7 and 10 for further on the flow control facility and feedwater pump station, respectively.

- If flow cannot be controlled within the normal operating range of the forebay or operation of the flow control facility, thereby causing the high WSL in the forebay to be exceeded, then excess flow from the Baker Pipeline will overflow into the local drainage system of the Baker WTP, discussed in Section 17.

Gravity – Combined Baker Pipeline and Irvine Lake Pipeline

Under certain conditions it may be desirable to receive water from both OC-33 and Irvine Lake, by gravity alone. This mode of operation presents no difficulties since the water from Irvine Lake would be operated at a variable rate while the MWD supplied water would be the base flow. That is, minor variations in the Baker Pipeline demand would be made up from Irvine Lake. However, the aggregate flow rate that is possible is limited, because the water surface level in Irvine Lake is significantly lower than that possible at OC-33. As a result, the flow rate from OC-33 must be reduced in order to prevent back-flow to the lake.

Gravity Transfer – Baker Pipeline to Irvine Lake Pipeline

Water from the Santiago Lateral can be transferred directly to the Irvine Lake Pipeline from the Baker Pipeline under conditions when it is not desirable to convey lake water in the Lake Reach of the ILP. In such a case, Santiago Lateral water, through OC-33 and Reach 1 of the Baker Pipeline, can be passed around the Lake Reach of the ILP by opening the 18-inch ball valve, in the RWPS, and back-flowing through the pump station. The valving has been sized to accommodate a flow of 30 cfs. However, the operation of the ball valve will require a minimum downstream backpressure in order to keep the valve from cavitation. This downstream backpressure should be achievable since the minimum values of the downstream HGLs are less than the normal operating range of WSLs in Irvine Lake (750' to 790'). The following Table 3.2 shows the minimum HGLs in the ILP needed, at the Raw Water Pump Station, to preclude cavitation. These values are below the expected HGLs in the ILP which will be controlled by the WSL in Irvine Lake as well as downstream takeouts.

Table 3.2 Operational Scheme – Baker to Irvine Lake Pipeline

Operating Condition	HGL	
	Baker P/L	Minimum Req'd in ILP
Max HGL in Santiago Lateral (Filling Irvine Lake at Flow Rate = 100 cfs)	872	749
Normal Maximum Operating HGL in Baker (No Flow to Irvine Lake)	832	725
Normal Operating HGL in Baker (Max Flow in Baker - No Flow to Irvine Lake)	815	714

Gravity Transfer – Irvine Lake Pipeline to Baker Pipeline

Under conditions when the Baker WTP plant requires raw water deliveries from Irvine Lake, that are on the order of 39 cfs, or less, flow to the plant can be achieved without pumping. That is, when the lake is at its minimum operational WSL of 750', about 16 cfs can be delivered by opening the 18-inch ball valve in the pump station and allowing flow to bypass the pumps. Also at the high WSL of 790' in the lake, about 39 cfs can be delivered to the plant without pumping. The above flow rates are based upon the assumption that there are no agricultural or TCWD demands.

When raw water is released from Irvine Lake into the ILP, flow can be delivered to the Baker WTP via the Baker Pipeline either by gravity or by pumping. (See Exhibit 3.8). Pumping will be necessary whenever the Baker WTP is supplied near normal operating capacities (i.e. in the range of 40 cfs). The conditions associated with these schemes are laid out in Table 3.1. Additional constraints associated with the Gravity Transfer – ILP to Baker P/L are as follows:

- Total flow through the Irvine Lake Pipeline equal to or less than 39 cfs, and the Irvine Lake WSL is 790'. Flow to Baker WTP in this scheme will depend on the simultaneous agriculture demands, and supplies to Serrano Water District and Trabuco Canyon Water District,

(This Page Intentionally Left Blank)

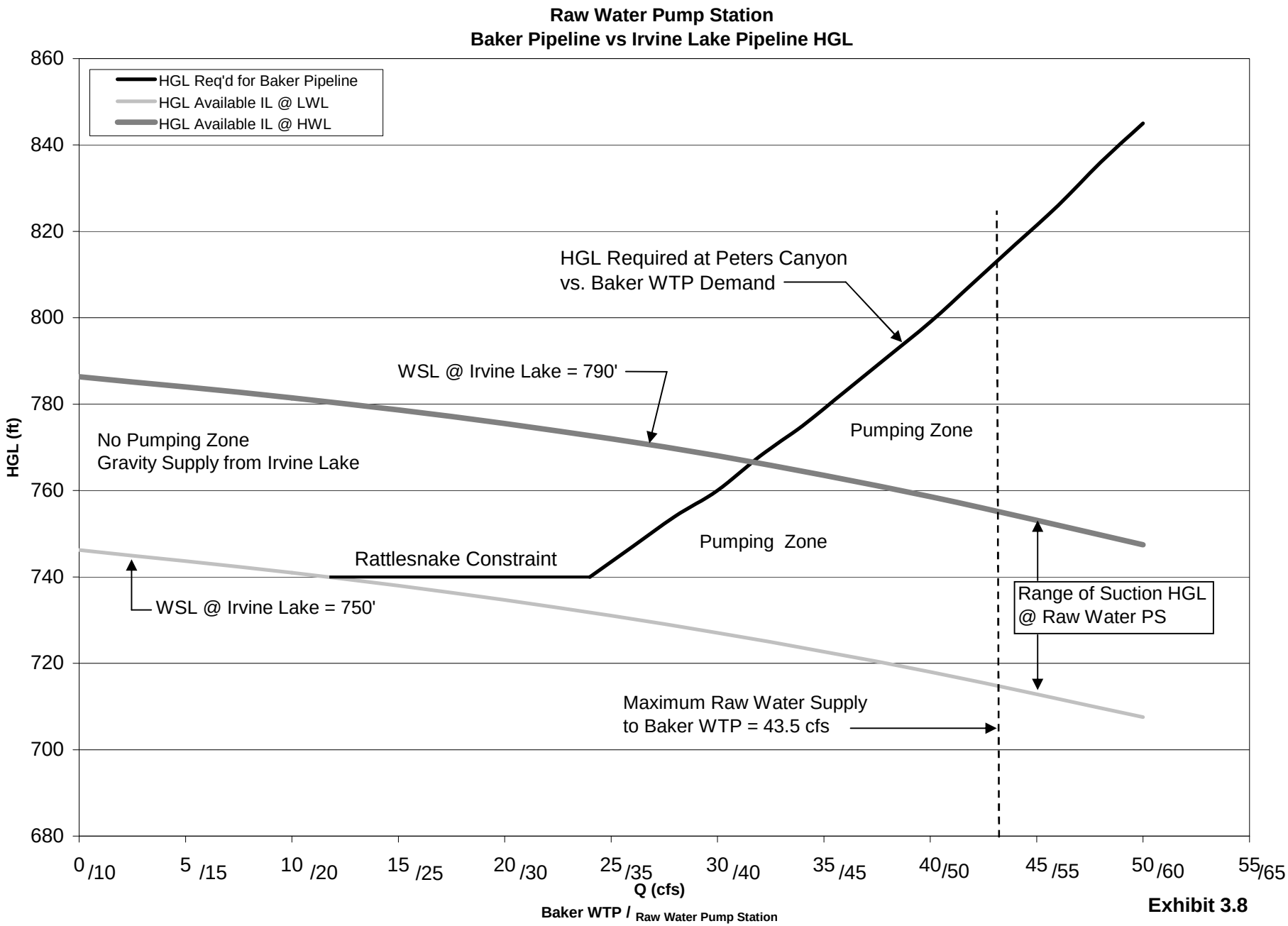
Raw Water Pump Station
Baker Pipeline vs Irvine Lake Pipeline HGL
HGL Req'd for Baker Pipeline
HGL Available IL @ LWL
HGL Available IL @ HWL
HGL (ft)
860
840
820
800
780
760
740
720
700
680
HGL Required at Peters Canyon
vs. Baker WTP Demand
WSL @ Irvine Lake = 790'
No Pumping Zone
Gravity Supply from Irvine Lake
Pumping Zone
Pumping Zone
Rattlesnake Constraint
WSL @ Irvine Lake = 750'
Range of Suction HGL
@ Raw Water PS
Maximum Raw Water Supply
to Baker WTP = 43.5 cfs
0 /10
5 /15
10 /20
15 /25
20 /30
25 /35
30 /40
35 /45
40 /50
45 /55
50 /60
55 /65
Q (cfs)
Baker WTP / Raw Water Pump Station

Exhibit 3.8

- Total flow through the Irvine Lake Pipeline between 33 cfs and 39 cfs, when the Irvine Lake WSL is between 750' and 790'. Again, flow to Baker WTP will be subject to the simultaneous demands of agriculture and other agencies.

- The Rattlesnake hill which is about one-third of the distance between the RWPS and the WTP will require a minimum HGL at the RWPS of 740 feet. This is referenced in Section 5 as the 'Rattlesnake Constraint'.

3.5.2 Pumping Conveyance

The Baker Raw Water Pump Station will pump Irvine Lake water, delivered to it through the ILP, through the Baker Pipeline to the Baker WTP, within the limits of the following constraints: Also, see Table 3.1.

- The Santiago Lateral is not being operated to fill Irvine Lake.
- WSL in the lake is greater than 740'.

The first constraint arises because the filling of Irvine Lake typically occurs at high flow rates. This results in an elevated HGL at OC-33 as well as an increase in the required discharge pressure at the Raw Water Pump Station, in the event that filling the lake and pumping from it should occur simultaneously. This is not a design condition for the RWPS since it will stretch the pumps beyond recommended operating limits.

The second constraint is based on the capacity limitations of the Irvine Lake Tower below the elevation of 740 ft, and because the release of Irvine Lake water with substantially heightened concentrations of manganese and iron occurring below this WSL, would be avoided.

General Baker P/L Operation

Since, under normal operating conditions, there are no institutional complications associated with withdrawals from Irvine Lake, the flow in the Baker Pipeline can be maintained or instantaneously modified as long as it is kept below the pipeline's maximum capacity. However, since the plant's instantaneous flow requirement may exceed the pipeline's capacity, the WSL in the forebay must be held within the band that defines its operational volume. In order to accomplish this, the flow control valve may be modulated based upon an assessment of the

forebay's high and low WSLs, and the flow measurement at the flow control facility.

There are two operational schemes for the pumping of Irvine Lake water, which are described summarized in Table 3.1 and described below:

- Pumping - Normal Operation
- Pumping – Combined Baker P/L (gravity) and ILP (RWPS feed)

Pumping – Normal Operation

When pumping and delivering, only Irvine Lake water to the WTP, the Baker Raw Water Pump Station, will target a discharge HGL that will be a function of the system curve for the Baker P/L. Demands in the Baker P/L, downstream of the RWPS, for agriculture, Trabuco Canyon Water District and the WTP, will define the pump station's discharge. It is not envisioned that the pump station will be operated simultaneously with the filling of Irvine Lake, through Santiago Lateral and OC-13; this would raise the discharge HGL of the RWPS above the normal operational design point.

Calculation of the headloss through Irvine Lake Pipeline to the Raw Water Pump Station is provided in Table E1 of Appendix E.

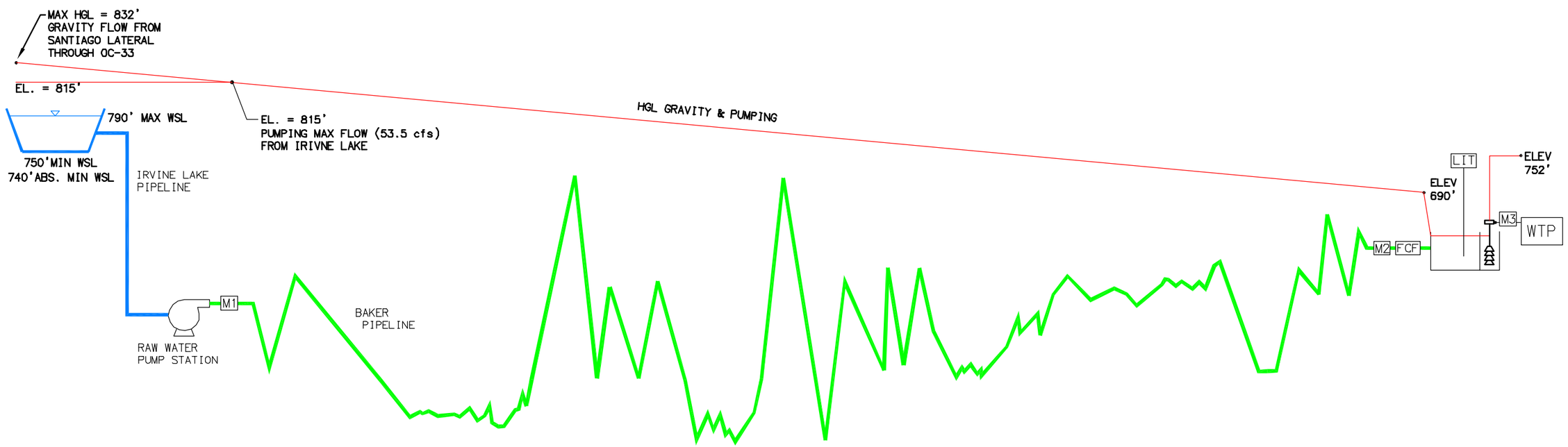

SCHEMATIC OF RAW WATER CONVEYANCE SYSTEM

H:\PDATA\10106232\CADD\WATER\EXHIBITS\PDR\6232-EXH-3.9REV.DWG CHESS 2/25/10 6:05 pm

RBF CONSULTING	carollo	*IRVINE RANCH WATER DISTRICT* *BAKER WATER TREATMENT PLANT* RAW WATER CONVEYANCE SYSTEM OPERATION SCHEMATIC	EXHIBIT 3.9

Pumping – Combined Baker P/L (gravity) and ILP (RWPS feed)

It will be possible to combine flows from the Santiago Lateral, through OC-33 to the Baker Pipeline, with water from Irvine Lake. Under this operational scheme:

- there will be no flow to the lake (i.e. HGL at OC-33 </= 832')
- the flow from OC-33 will be constant
- variations in downstream demand will be met from Irvine Lake via the ILP and the RWPS

3.6 TREATMENT

Water will be conveyed through the treatment system by a combination of gravity flow and pumping. Exhibit 3.10 shows the hydraulic profile of the treatment plant.

3.7 PRODUCT WATER SYSTEM

The Product Water System includes the clearwell to store product water from Baker WTP, and the Product Water Pump Station to boost water into the Allen McColloch Pipeline.

3.7.1 Clearwell

The clearwell for the Baker WTP will be an existing 16 MG buried concrete reservoir, previously used as emergency storage for Zone 1 of the Los Alisos Water District system. A 42-inch pipeline will be constructed to deliver product water from the CT basin to the clearwell by gravity. The reservoir low and high water level elevations are 595 ft and 621 ft, respectively.

3.7.2 Product Water Pump Station

The Product Water Pump Station will be designed to pump a flow of 33 cfs from the clear well through a new 36-inch diameter pipeline to the Allen McColloch Pipeline.

3.7.3 Allen McColloch Pipeline

Product water delivery to El Toro Water District, Moulton Niguel Water District and Santa Margarita Water District will be through the AMP Pipeline. Trabuco Canyon Water District's plant capacity will be conveyed into the AMP. As TCWD does not currently own capacity in the AMP, a transfer of water with one of the other Project Stakeholders

will be established to provide TCWD its capacity. Product water will be delivered to the AMP at the connection constructed during the Baker Pipeline/AMP interconnect. Hydraulic grade in the AMP varies significantly by season, with a maximum HGL of 806 ft during periods low demand (wet season) to an absolute minimum HGL of 630 ft during periods of high demand (dry season).

3.8 PRODUCT WATER SYSTEM OPERATION

The product water system will deliver water by gravity or pumping as summarized:

- Gravity Flow – from the clearwell to IRWD through the existing Zone 1 outlet pipeline to the reservoir.
- Pumped Flow – the pump station will be designed to pump from the clearwell to the AMP, accounting for the variable levels in the clearwell and HGL in the AMP.

3.9 HYDRAULICS

The overall Baker WTP project hydraulics are illustrated on Exhibit 3.11, noting the following:

Raw Water System

1. OC-33 turnout – HGL can range from 832 to 872 ft dependent on the flow in Santiago Lateral to Irvine Lake.
2. Raw Water Pump Station – discharge HGL of 815 ft, and design not based on pumping during the filling of Irvine Lake.
3. Topographic Constraint – the HGL in Baker Pipeline should be a minimum of 15 feet above the centerline elevation of the pipeline, and will be greater when Irvine Lake is being filled from the Santiago Lateral.
4. Flow Control Facility – this facility will control flow and break head of gravity flow from Baker Pipeline to the forebay. The estimated range of HGL on the upstream side of the facility is 690 to 730 ft. Downstream of the facility the HGL will be within a few feet of the water surface level in the forebay.
5. Feedwater Pump Station – this facility will boost water to an HGL determined by the membrane system manufacturer, currently estimated at 752 feet.

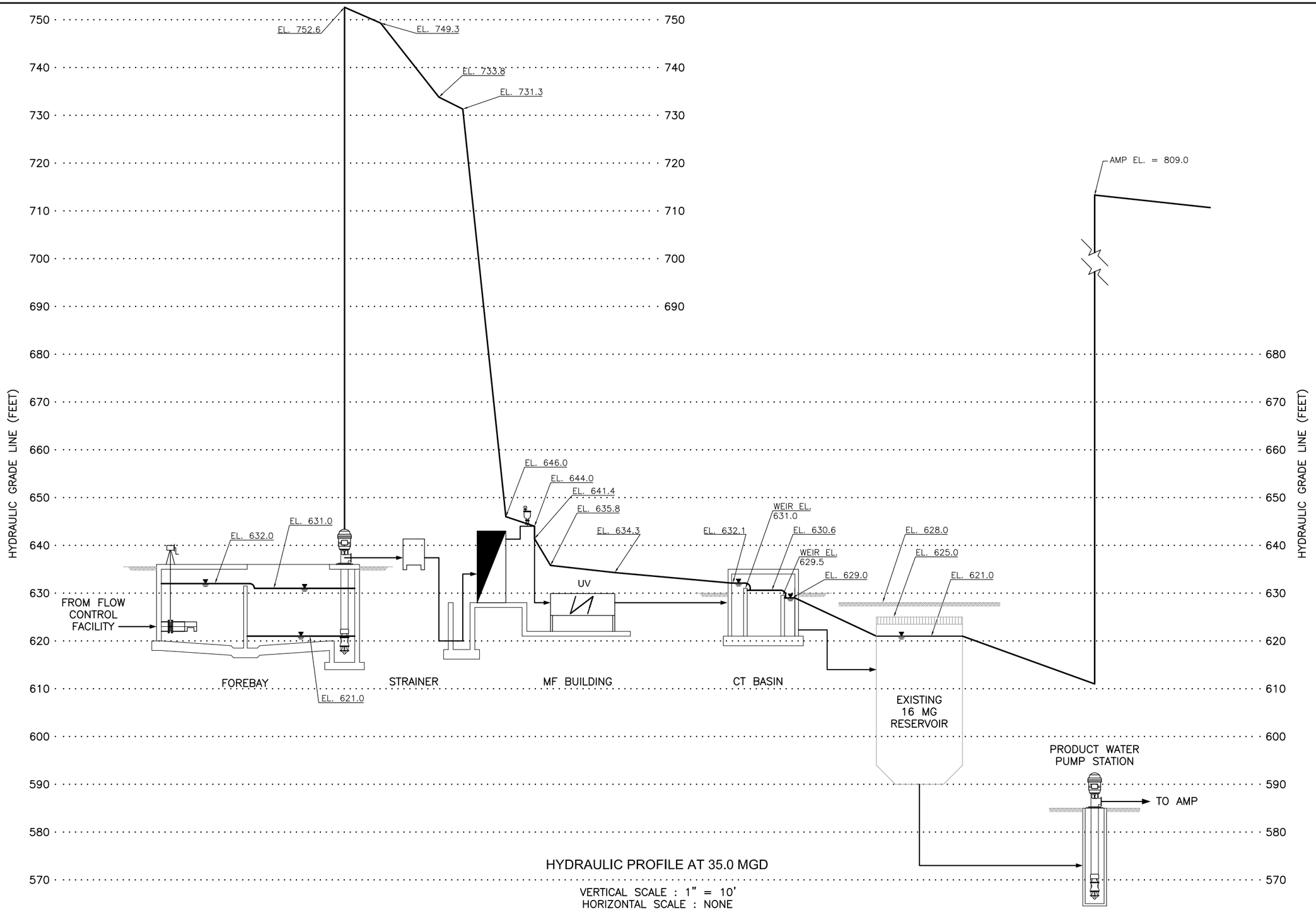

HYDRAULIC PROFILE AT 35.0 MGD

VERTICAL SCALE : 1" = 10'
HORIZONTAL SCALE : NONE

RBF CONSULTING

carollo

IRVINE RANCH WATER DISTRICT

BAKER WATER TREATMENT PLANT

HYDRAULIC PROFILE MAIN PROCESS

EXHIBIT 3.10

6. Strainer – a strainer for protection of the membrane system will be located downstream of the feed water pump station, and will generate additional headloss anticipated to range from 0 to 16 ft, depending on feed water pump station discharge flow.

Treatment Plant

7. Membrane Filtration and UV – a total of 64 feet of headloss is accounted for across the filters and UV system.

8. CT Basin – this open basin was located such that adequate head is provided for gravity flow of product water to the clearwell.

Product Water System

9. Clearwell – the existing 16 MG reservoir operating range is considered to be 600 to 621 ft.

10. Product Water Pump Station – this pump station will boost water from the clearwell to the Allen McCulloch Pipeline, and account for headloss in the 36-inch diameter pipeline to the point of connection and valve / metering vault near the connection.

11. Allen McColloch Pipeline Connection – the HGL of the AMP is understood to vary from a minimum HGL of 630 ft, to a maximum of 806 ft.

(This Page Intentionally Left Blank)

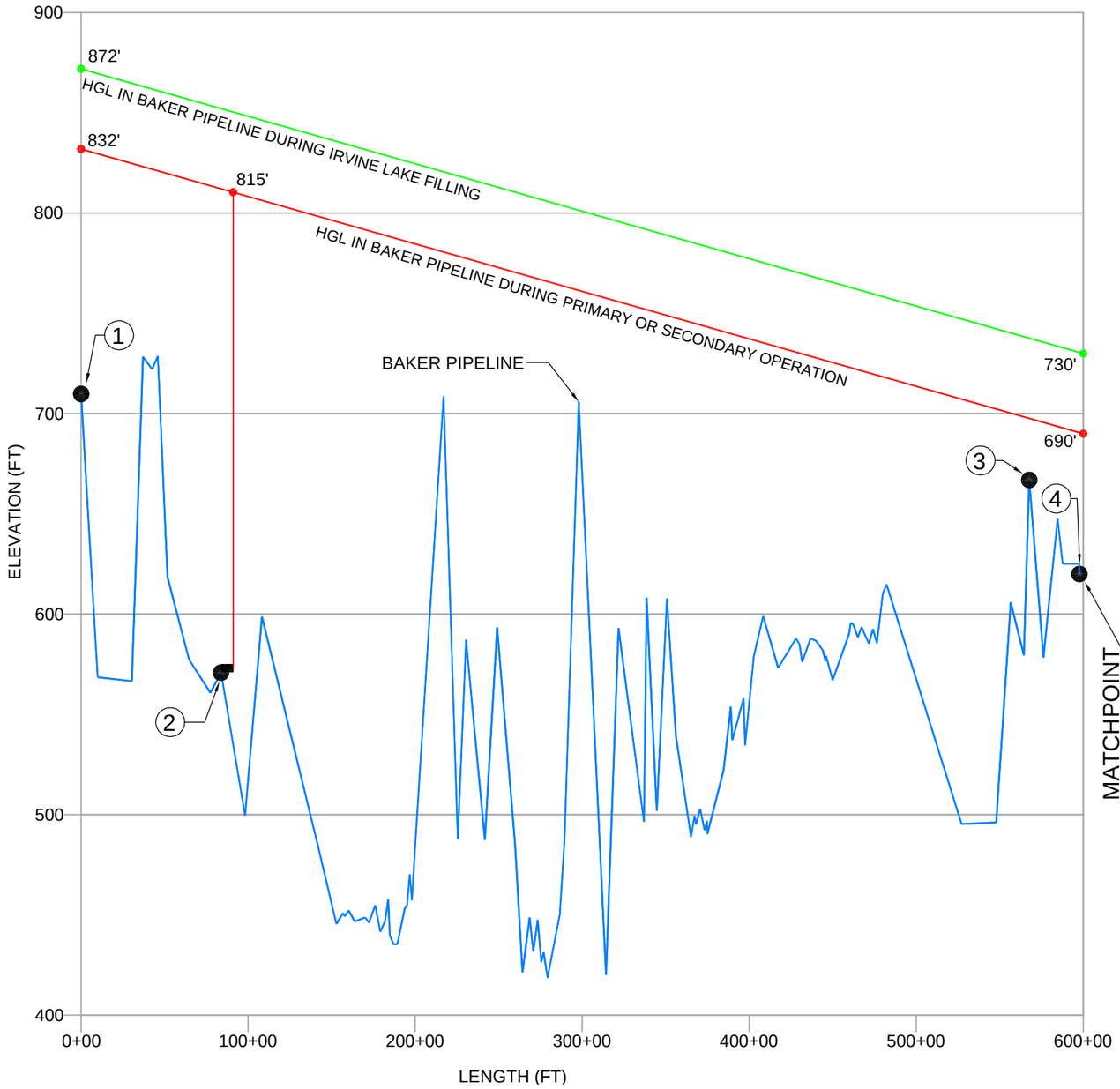

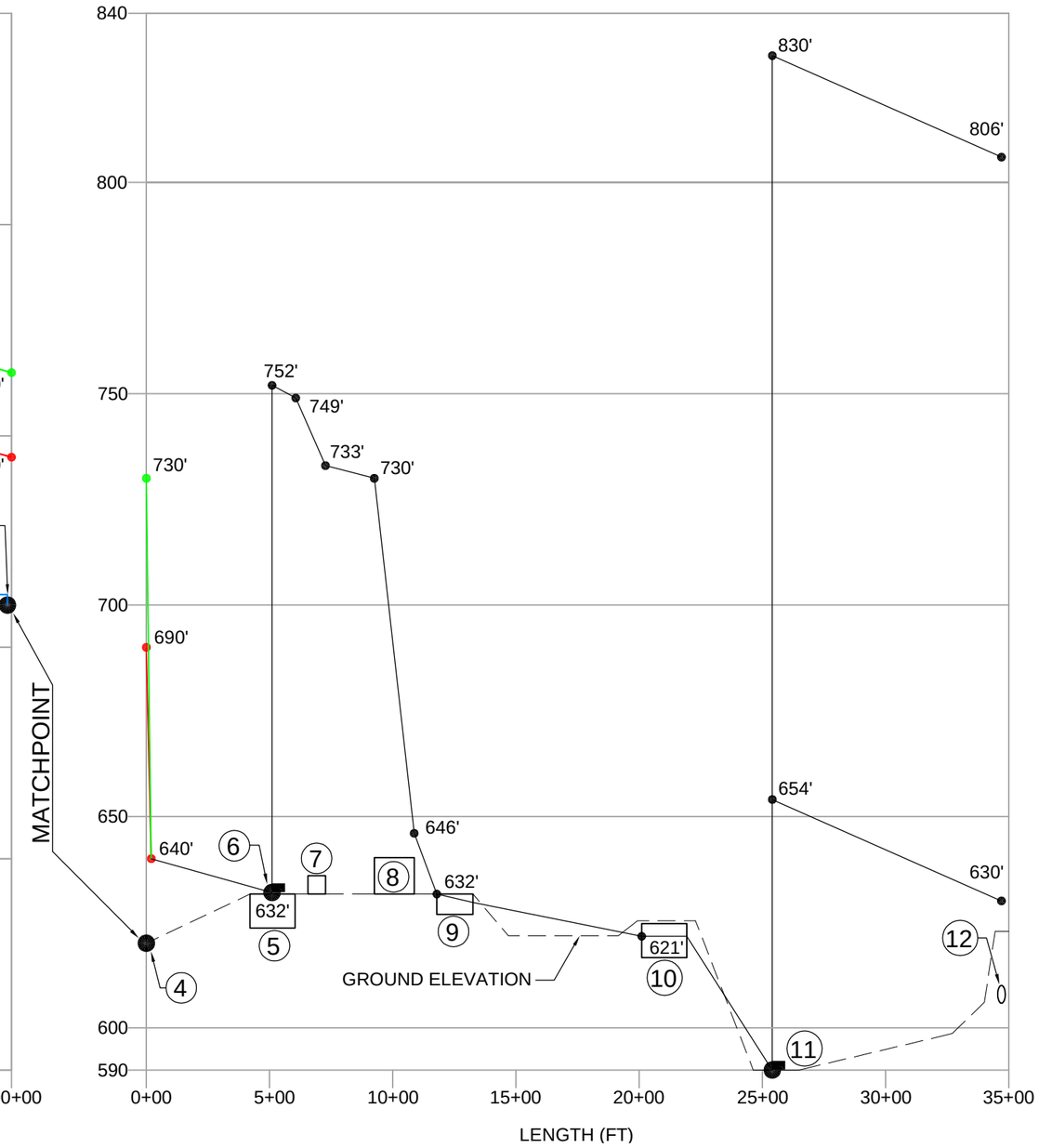

NO.	FACILITY	MAX. HGL (ft)	MIN. HGL (ft)	HGL GOVERNED BY
1	OC-33 TURN-OUT	872	832	SANTIAGO LATERAL TOWER
2	RAW WATER PUMP STA.	832	815	FLOW THRU OC-33
3	TOPO CONSTRAINT	737	697	BAKER P/L HGL
4	FLOW CONTROL FAC.	690 - 730	640	BAKER P/L HGL
5	FOREBAY	632	621	PLANT OPERATION
6	FEEDWATER PUMP STA.	752	-	HGL GOVERNED BY
7	STRAINER	749	733	FWPS HGL
8	MF / UV	731	646	PMF MANUF. DESIGN

NO.	FACILITY	MAX. HGL (ft)	MIN. HGL (ft)	HGL GOVERNED BY
9	CT BASIN	632	631	FIXED
10	CLEARWELL	621	600	PLANT OPERATION
11	PRODUCT WATER PS	830-654	-	AMP HGL
12	AMP CONNECTION	806	630	AMP DEMANDS

H:\PDATA\10106232\CADD\WATER\EXHIBITS\PDR\6232-EXH-3.11REV.DWG CHESS 3/1/10 5:52 pm

RBF CONSULTING

carollo

IRVINE RANCH WATER DISTRICT

BAKER WATER TREATMENT PLANT

BAKER PROJECT
HYDRAULIC PROFILE

EXHIBIT

3.11

SECTION 4 OC-33 Turnout

4.1 OVERVIEW

The OC-33 turnout is an existing in-line metering facility off of the Santiago Lateral. Its function is to measure flows that pass from the Santiago Lateral to the Baker Pipeline. Capacity of the turn-out is limited by the maximum flow measurement of the installed meter. This section addresses flow capacity and required modification of the OC-33 turn-out, prior to and after the start up of the Baker WTP.

4.2 CAPACITY

The OC-33 turn-out capacity under prior, current and future conditions is explained as:

4.2.1 Prior Capacity

The OC-33 turn-out was constructed with a flow meter (Venturi type) capable of measurement up to 100 cfs (for construction plans, refer to Appendix D). A combination of agricultural demand and supply to water treatment plants in southern Orange County dictated the range of flow measurement necessary.

4.2.2 Current Capacity

Raw water supply to Los Alisos Water District and El Toro Water District, through the Baker Pipeline, declined in the late 1970s and 1980s due to residential development and the decommissioning of the Baker Filter Plant. Eventually, the flow rate through OC-33 dropped to approximately 15-percent of maximum flow. In 1989, the flow meter was replaced with a new meter (Venturi type) capable of more accurately measuring lower flows and limited to 40 cfs.

4.2.3 Future Capacity

Operation of the Baker WTP will increase the normal flow through the OC-33 turn-out to Baker Pipeline. The allocated water rights per the current Baker Pipeline Agreement (held between Santiago Aqueduct Commission and each agency) total to 104.9 cfs in Reach 1.

The Project Stakeholders plan to reallocate the water rights in the Baker Pipeline with the Baker WTP Project. The water rights will be revised (per Table 4.1) to 99 cfs in Reach 1, and include capacity for:

- Baker Water Treatment Plant - held by IRWD, MNWD, SMWD, ETWD, TCWD.
- Agriculture Use - capacity for agriculture users in the area of Orchard Hills and North Irvine area.
- Trabuco Canyon Water District –Six (6) cfs capacity in Baker Pipeline for supply to the Dimension Plant.
- Irvine Ranch Water District –Thirty two (32) cfs capacity for transfer of water through Reach 1 of the Baker Pipeline to the Irvine Lake Pipeline when the Irvine Lake Reach (of the ILP) requires maintenance.
- Other Baker Pipeline Water Rights Holders – agencies or entities with water rights to Baker Pipeline that are not participating in the Baker WTP project (including the County of Orange, East Orange County Water District and The Irvine Company).

Table 4.1 Maximum OC-33 Flow Rate

Capacity Rights of	Flow (cfs)
Baker Water Treatment Plant	43.5
Agriculture Use	4.0
Trabuco Canyon Water District	6.0
Irvine Ranch Water District	32.0
Other Baker Pipeline Water Rights Holders	13.5
Total	99.0

4.3 MODIFICATION

The existing flow meter is limited to measurement of 40 cfs. Therefore, the existing meter will be removed and replaced with a Venturi or Mag type flow meter (at MWD's direction) capable of measuring up to 100 cfs. Coordination with MWD has been initiated, and regularly scheduled meetings are planned to continue discussion between MWD and IRWD through final design. Further discussion of MWD coordination is provided in Section 24.

SECTION 5 RAW WATER PUMP STATION

5.1 OVERVIEW

The Baker Raw Water Pump Station (RWPS) will enable supply of raw water from Irvine Lake to the Baker Water Treatment Plant. This section describes the basis for design and operation of the pump station, covering the following topics:

- Capacity – basis for the design capacity of the pump station
- Hydraulics – pump station specific hydraulic calculations and analysis
- Site Development – location of the pump station, site access, demolition, earthwork, drainage, easements and geotechnical conditions
- Design Criteria – summary of design parameters
    - Pump
    - Surge
    - Mechanical
    - Structural
    - Geotechnical
    - Operation

5.2 Capacity

The capacity of the pump station includes delivery of raw water for the Baker WTP, the Trabuco Canyon Water District filtration plant, and agriculture demands. These flows are shown in Table 5.1.

Table 5.1 RWPS Capacity

Demand Point	Flow (cfs)
Baker WTP	43.5
Trabuco Canyon Water District – Dimension WTP	6.0
Agricultural Use	4.0
TOTAL	**53.5**

Three agencies (East Orange County Water District, The Irvine Company and the County of Orange), which are not Baker WTP stakeholders, have capacity rights totaling 13.5 cfs in Reach 1 of the Baker Pipeline. It is assumed these agencies will continue with their allocated rights in the Baker Pipeline and may receive water from Reach 1, during operation of the Baker WTP. These flows are considered to be separate from water supplied to the Baker Pipeline through the Baker Raw Water Pump Station, and therefore are not included in the pump station capacity.

5.3 Hydraulics

Hydraulic calculations to estimate the range of suction and discharge pressures for the RWPS are provided in Table E1 of Appendix E. The range of suction pressures accounts for minor and frictional losses through the Irvine Lake Pipeline. The range of discharge pressures is based on the minimum discharge HGL necessary to maintain a minimum head of 15 feet over the high points in the Baker Pipeline.

A summary of the primary calculation values is provided as Table 5.2.

Table 5.2 RWPS Hydraulics

Description	Parameter
Hydraulics (Suction)	
Water Level in Irvine Lake	750 - 790 ft
Maximum Flow	70 cfs
Headloss thru IL outlet tower and Irvine Lake Pipeline	0 - 57 ft
Minimum HGL at Raw Water Pump Station	708 ft
Hydraulics (Discharge)	
Discharge HGL in Baker Pipeline	815 ft
Maximum Flow	53.5 cfs

The 100% and 70% speed curves, for a representative pump (Johnston 27 CC) and for lake levels of 750 ft and 790 ft, are shown in Exhibit 5.1. The curves represent two-pumps operating with one standby. The condition with one pump operating is not shown since the HGL at which water is delivered to the RWPS is generally above the system curve for lower flows, and gravity flow is possible.

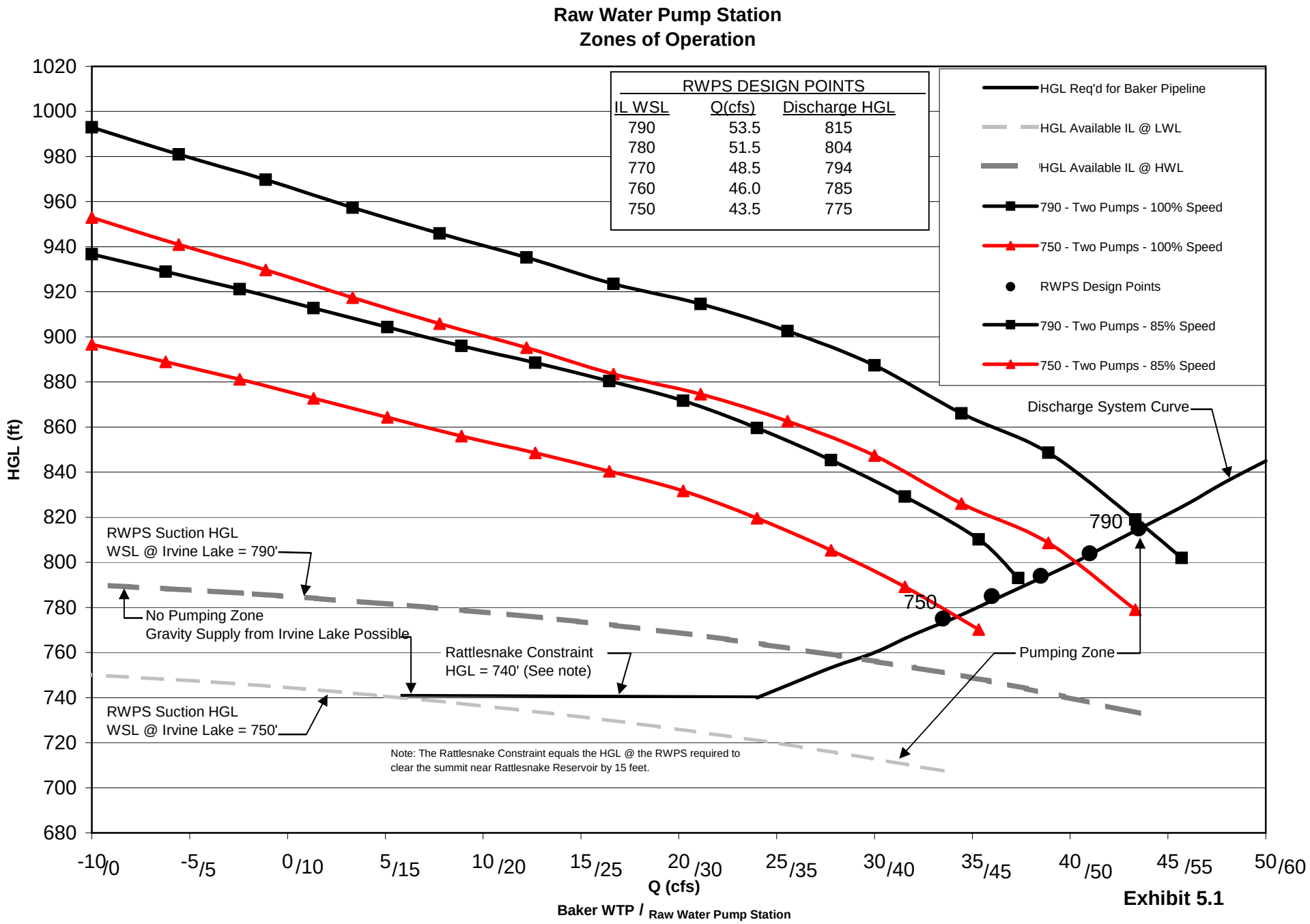
Raw Water Pump Station
Zones of Operation
RWPS DESIGN POINTS
IL WSL Q(cfs) Discharge HGL
790 53.5 815
780 51.5 804
770 48.5 794
760 46.0 785
750 43.5 775
HGL Req'd for Baker Pipeline
HGL Available IL @ LWL
HGL Available IL @ HWL
790 - Two Pumps - 100% Speed
750 - Two Pumps - 100% Speed
RWPS Design Points
790 - Two Pumps - 85% Speed
750 - Two Pumps - 85% Speed
Discharge System Curve
790
750
RWPS Suction HGL
WSL @ Irvine Lake = 790'
No Pumping Zone
Gravity Supply from Irvine Lake Possible
Rattlesnake Constraint
HGL = 740' (See note)
Pumping Zone
RWPS Suction HGL
WSL @ Irvine Lake = 750'
Note: The Rattlesnake Constraint equals the HGL @ the RWPS required to clear the summit near Rattlesnake Reservoir by 15 feet.
HGL (ft)
1020
1000
980
960
940
920
900
880
860
840
820
800
780
760
740
720
700
680
-10/0
-5/5
0/10
5/15
10/20
15/25
20/30
25/35
30/40
35/45
40/50
45/55
50/60
Q (cfs)
Baker WTP / Raw Water Pump Station

Exhibit 5.1

Separate design points were calculated for each ten feet of lake level from 790 ft to 750 ft. The development of these values is shown in Table E1 of Appendix E. They reflect a reduction in flow through the ILP and the Baker Pipeline as a function of declining water surface level in Irvine Lake. The reduction of flow was made in order to achieve pumping conditions, over the 40-foot range in Irvine Lake WSLs, which would parallel the system curve and thereby fix the power requirements required for the maximum outlet tower flow rate (70 cfs) at the highest lake level (790'). The horsepower required to pump from this lake level at 53.5 cfs is approximately the same as that required to pump from a WSL of 750 ft at 43.5 cfs. In order to maintain the same discharge rate over the entire range of declining lake levels the pump station horsepower would have to increase from 750 to 1,000 HP.

This approach to sizing the RWPS was taken since the possible range of flow through the ILP and the Baker Pipeline has not been finalized to the extent that discrete design points are available. Although it is believed that the demands underlying the pumping rates are reasonable, this is a matter that must be addressed further in final design, including coordination amongst the Project Stakeholders.

5.4 SITE DEVELOPMENT

The Baker Raw Water Pump Station will be constructed at the "Peters Canyon" site which is owned by the Santiago Aqueduct Commission (SAC). The site is located in the City of Orange, between the Peters Canyon Reservoir and Jamboree Road. The pump station will be constructed within the SAC parcel, but will require construction easements with the County of Orange and Metropolitan Water District (see **Drawing C3**). Currently, two buildings exist at the site:

- Irvine Lake Pipeline / Baker Pipeline Flow Control Facility – operated by IRWD
- Municipal Water District of Orange County and East Orange County Water District Flow Control Facility – operated by MWD

Crossing the site are the Irvine Lake Pipeline, Baker Pipeline and Allen McColloch Pipeline. The IRWD flow control facility is used for routine transfer of water from the Baker Pipeline to the Irvine Lake Pipeline.

5.4.1 Site Access

Site access consists of a unpaved roadway off of Jamboree Road. A swing gate is located along the roadway allowing access of authorized vehicles only. Asphalt pavement exists along a portion of the site access road closer to the buildings and in the area designated for parking.

5.4.2 Demolition

The Irvine Lake Pipeline / Baker Pipeline Flow Control Facility will be demolished in order to accommodate construction of the Baker Raw Water Pump Station.

5.4.2.1 Description

The pump station construction will occur on SAC, MWD and County of Orange owned land, requiring the demolition of the existing flow control facility and earthwork to prepare a level pad for the building. Site demolition will consist of demolition and removal of:

- ILP / Baker Flow Control Building
- Asphalt Pavement
- Electrical Meter / Switchboard
- Chainlink Fence
- Portions of pipeline connected to the Irvine Lake Pipeline and Baker Pipeline.

Exhibit 5.2 (Drawing D2) depicts the existing building, pipelines and area of demolition and land ownership at the site. The function of transferring water from the Baker Pipeline to the ILP will be temporarily discontinued with the demolition of the facility. Concurrent with the demolition work, two buried butterfly valves, at the connections to the Baker Pipeline and the ILP, will be refurbished, or removed and replaced.

5.4.2.2 Hazardous Materials

The possibility of hazardous materials (e.g. lead paint, asbestos) having been incorporated into the original construction will be investigated. If present, these materials will be removed by a specialty contractor prior to the general demolition.

5.4.3 Earthwork

The new pump station site may also need space reserved for a surge tank connected to the Irvine Lake Pipeline. The surge tank would be adjacent to the pump station building. Retaining walls would be constructed to extend the construction pad while minimizing the necessary earthwork prior to construction.

5.4.4 Drainage

Few changes to the existing drainage patterns will be required. The overall site is small in terms of stormwater development, thus there will be no major drainage control facilities incorporated into the construction.

Exhibit 5.3 (Drawing C3) shows the proposed site improvements associated with the construction of the Raw Water Pump Station.

5.5 Design Criteria

5.5.1 Pump

The pump design parameters are summarized in Table 5.3. The system curve and pump curves are depicted on Exhibit 5.1. Design is based on 70-percent speed as the lowest pump speed.

Table 5.3 RWPS - Pump Criteria

	Units	Value
Pump Station Design Capacity	CFS	53.5
Pumps Type: Vertical Turbine	-	-
No. of Pumps	NO.	3
No. of Redundant Pumps	NO.	1
Design Flow per Pump	GPM	12,000
TDH	FT of Water	105
Power	HP	450

5.5.2 Surge

Flow Science, Inc. prepared a surge analysis for the RWPS. The analysis considered surge conditions on the suction and discharge sides of the pump station.

No potentially damaging surge events, which would require the installation of a surge tank to protect the Baker Pipeline, are predicted for the discharge side of the pump station. However, the report recommends:

- the installation of vacuum relief valves at local high points Stations, 328+13, 164+85, 597+81, and 881+62 on the Baker Pipeline and,

- the construction of a constant-head-tank upstream of the WTP, in order to protect the plant from low pressures that could be produced as a result of a power failure at the RWPS (Note that the currently planned forebay will function as a constant-head-tank, with respect to the protection of the membranes).

The protection of the ILP, from transients caused by a power failure at the RWPS, will require one of the following:

- the construction of a 3,200 cu. ft. surge tank on the suction side of the Raw Water Pump Station or,

- the installation of an eight-inch diameter surge relief valve at ILP station 328+20.

During a complete power interruption, without one of these facilities, there would be an incursion into the ILP's safety margin for transient events. The surge tank would be more expensive to construct than the relief valve, although the latter would require the construction of approximately 1,500 feet of 8-inch diameter pipe. Alternatively the relief valve could be installed at Sta 214+00 where it would be able to discharge into an existing detention basin and require approximately 200 feet of 8-inch pipeline.

Analysis is on-going and will be continued into and through design to finalize the facilities necessary and in support of coordination with MWD. The conclusions provided herein are based on the Draft Report (November 2009), which has been provided to MWD for initial review.

5.5.3 Mechanical

The mechanical layout of the RWPS, illustrated on Exhibit 5.4 (Drawings M17 - Plan, M18 and M19 - Sections), encompasses the configuration of the pumps, valves, meter and surge tank associated with the design. The mechanical criteria associated with valving, meters and surge are summarized in Table 5.4.

Table 5.4 RWPS - Mechanical Criteria

Equipment	Count	Size	Description
Check Valves	3	30-inch	Silent Check
Butterfly Valves	3	30-inch	Manual – Gear Operator - Direct Burial
Butterfly Valves	3	30-inch	Manual – Gear Operator
Butterfly Valves	2	20-inch	Manual – Gear Operator
Butterfly Valves	2	12-inch	Manual – Gear Operator
Globe Valve	1	16-inch	Pressure Relief
Globe Valve	1	10-inch	Pressure Relief
Ball Valve	1	18-inch	Flow Control - MOV
Air Valves	3	6-inch	Combination Air Vac / Release
Air Valve	1	4-inch	Air Release
Air Valve	1	2-inch	Air Release
Meter	1	30-inch	Magnetic
Surge Tank	1	3500 cu. ft.	Hydropneumatic

5.5.4 Structural

The Raw Water Pump Station will be constructed as a masonry block building measuring approximately 30 ft by 60 ft. The new building will be constructed with slope retainment to the south to reduce the extent of grading into the existing slope. In addition, the planned area for the surge tank requires a retaining wall, as shown in Exhibit 5.3 (**Drawing C3**).

5.5.5 Geotechnical

A geotechnical investigation, including borings and soil data logging, will be completed with the design of the Raw Water Pump Station.

5.5.6 Operation

The RWPS will be operated to convey Irvine Lake water to the Baker WTP in the event of an interruption in supply from the Santiago Lateral. When flow is reduced or stopped through OC-33, Irvine Lake can be used as a raw water source for the Baker WTP, either replacing or supplementing the MWD supply.

The modifications made at the Peters Canyon site will not affect the ability of the Baker Pipeline to be utilized as bypass pipeline in the event of future maintenance of the Allen McColloch Pipeline.

(This Page Intentionally Left Blank)

SECTION 6 TRABUCO CANYON WATER DISTRICT PUMP STATION

6.1 BACKGROUND

Trabuco Canyon Water District receives raw water through the Baker Pipeline, which it treats at its Dimension Plant. Raw water is currently delivered to TCWD from the Baker Pipeline by way of a 12- / 16-inch pipeline. IRWD and TCWD operate the connection based on a minimum HGL of 720 ft, to provide a flow of up to 6 cfs at the minimum required pressure for the Dimension Plant.

Under the proposed project, the Baker Pipeline will be operated to deliver raw water flow of 43.5 cfs to the Baker WTP. In the event that all water rights are conveyed through Reach 1 of the Baker Pipeline, the HGL at the Baker WTP is estimated to be 690 feet. As a result, a pump station will be required to continue raw water delivery to the TCWD Dimension Plant.

This section describes the preliminary design concept and criteria for the TCWD Pump Station.

6.2 PUMP STATION

The TCWD Pump Station will be constructed to receive water from the Baker Pipeline and boost water to a minimum HGL of 720 ft for supply to TCWD's Dimension Plant. As currently considered the pump station will draw water from the main raw water pipeline to the Baker WTP Project, upstream of the flow control facility. A bypass pipeline will be provided to transfer water by gravity, similar to current conditions, when sufficient head exists. The pump station will be constructed along the access road situated between the Baker Pipeline valve vaults and Zone A Reservoirs. Design of the pump station will consist of three (3) pumps, with two as duty pumps, and one stand-by. All pumps will be constructed above ground and inside a block wall enclosure with a chainlink cage over the top for security.

6.3 CAPACITY

The pump station capacity of 6 cfs (2,700 gpm) equals the water rights currently held by TCWD in the Baker Pipeline. It is understood that TCWD operation of the Dimension Plant includes periods of backwash where rapid decreases of flow to the plant ranging from 1 to 3 cfs can occur.

6.4 HYDRAULICS / OPERATION

The HGL upstream of the TCWD Pump Station will vary with the hydraulic conditions in the Baker Pipeline. During normal operation of the Baker WTP, the HGL is estimated to drop below 720 ft, due to the existing water rights for agricultural demands in the upstream reaches of Baker Pipeline. When Irvine Lake is being filled from the Santiago Lateral the HGL into the Baker Pipeline will rise by approximately 40 ft. In this case, the HGL in Baker Pipeline will rise above 720 ft, allowing for flow to bypass the TCWD Pump Station directly to the Dimension Plant.

The TCWD Pump Station design must also account for the rapid variation of flow during backwashing of the media filters at the Dimension Plant. Two potential solutions are under consideration:

1. Relief Valve – a valve to release flow during the short periods of reduced flow through the Dimension Plant media filters.

2. Flow Equalization – an equalization basin between the TCWD Pump Station and Dimension Plant.

6.5 DESIGN CRITERIA

The hydraulic design criteria for the TCWD Pump Station are summarized in Table 6.1.

Table 6.1 TCWD Pump Station Design Criteria

Type:	Unit	Value
Type of Pump: Horizontal Split Case or Vertical Pumps	-	-
No. of Pumps (Duty and Redundant)	NO.	3
No. of Redundant Pumps	NO.	1
Capacity per Pump	GPM	1,350
TDH (Maximum)	FT of Water	60
Size	HP	25
Mechanical	-	-
Upstream Pipeline Diameter	IN	12
Inlet Pipeline	IN	12
Discharge Pipeline	IN	12
Isolation Valves	IN	12
Downstream Pipeline Diameter	IN	16

SECTION 7 FLOW CONTROL FACILITY

7.1 OVERVIEW

The flow control facility at the Baker Water Treatment Plant will control flows originating either from the Santiago Lateral through OC-33 or from Irvine Lake via the Baker Raw Water Pump Station. In each case, the facility will handle flows up to the maximum capacity of the Baker Pipeline, less takeouts for agricultural interests and TCWD. These takeouts represent about twenty percent of the total pipeline capacity, but are withdrawn from the pipeline upstream of the facility.

7.2 HYDRAULICS AND OPERATION

The Baker Water Treatment Plant has been sized to treat a raw water flow of about 43.5 cfs (28 mgd). Exhibit 7.1 shows the upstream HGL at the facility, as a function of the flow rate delivered through the Baker Pipeline to the facility. The downstream HGL required to deliver the flow to the forebay is represented by the lower curve. The HGL at the entrance to the facility will be reduced, by the flow control valve, to an HGL sufficient to supply the forebay, with the WTP's raw water demand.

Both ball valves and sleeve valves were analyzed in order to determine their suitability as flow control valves. Butterfly and gate valves were summarily eliminated because of their inability to operate, without cavitating, where there is little outlet pressure. In this case, the only available pressure downstream of the flow control facility is that required to convey the raw water to the forebay, a vertical distance of less than 20 feet. Two ball valve configurations were considered:

- Parallel trains: 12-inch ball valves and static sleeve valves (Table 7.1)
- Single train:18-inch ball valve—16-inch static sleeve valve (Table 7.2)

Neither of these configurations proved to be workable over a sufficient range of flow conditions, tending to cavitate at low flows, while at higher flows the valves approached full-open and could not be expected to effectively modulate flows.

An 18-inch angle-pattern sleeve valves will be capable of operating over the full range of flows without cavitating (see Table 7.3). Exhibit 7.2 (see **Drawing M1**) depicts the proposed flow control facility with two sleeve valves for redundancy. Dependent on the potential for quagga mussel in the Irvine Lake Pipeline and Baker Pipeline, strainers upstream of the flow control facility may be necessary.

(This Page Intentionally Left Blank)

Exhibit 7.1
Flow Control Valve

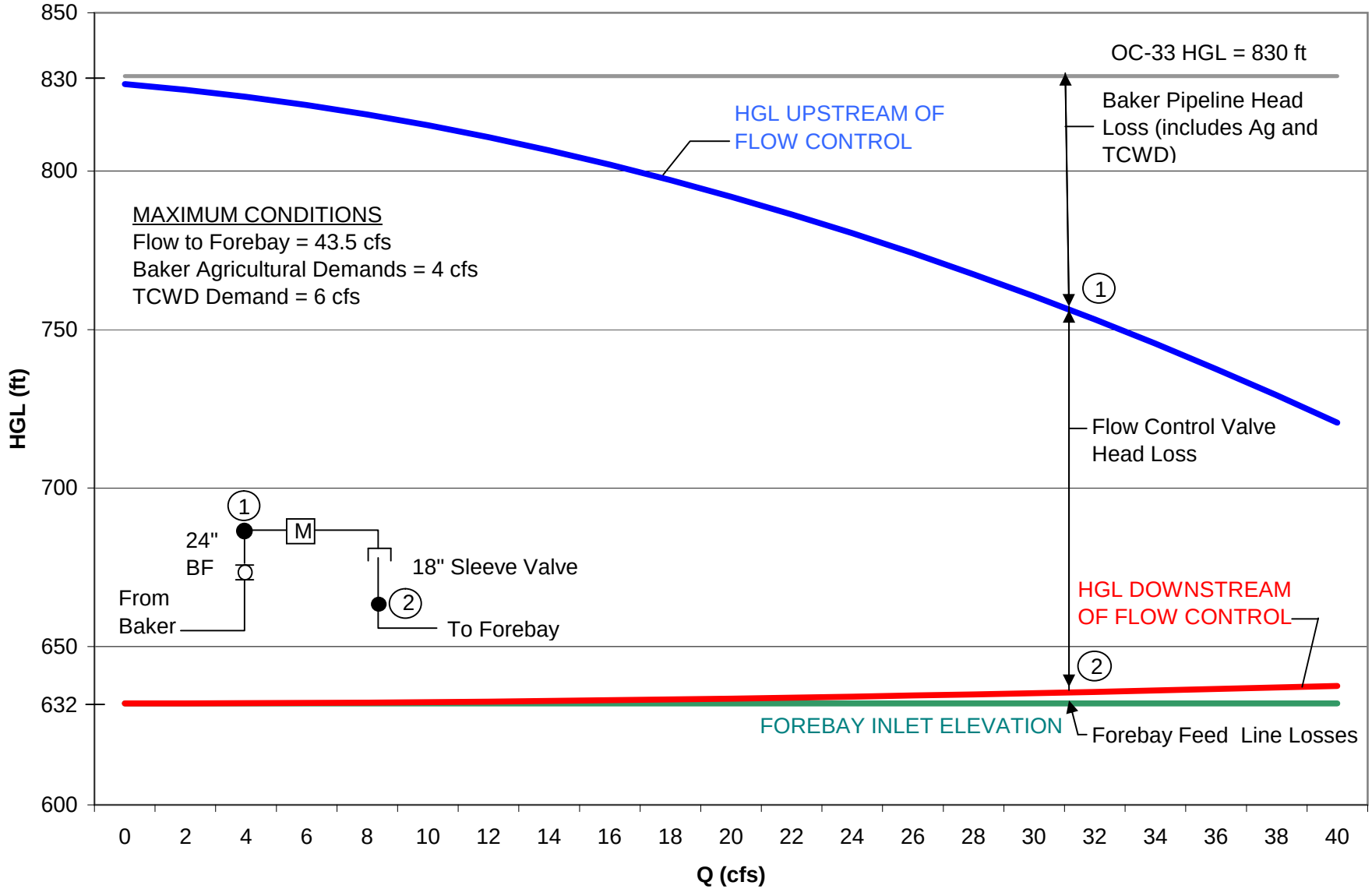

Flow to WTP Forebay (43.5 cfs Max.)

TABLE 7.1
BAKER WATER TREATMENT PLANT
FLOW CONTROL FACILITY - CAVITATION ANALYSIS
Two Parallel 12-inch Ball Valves and Static Sleeve Valves

Raw Water Flow to WTP (CFS)	Flow Through Each Parallel Valve (CFS)	Valve Elevation (Feet)	HGL (Feet) --12-INCH BALL VALVE		HGL (Feet) --12-INCH STATIC SLEEVE VALVE		BALL VALVE									
							Head (Feet)			Ball Valve						
			Upstream	Downstream	Upstream	Downstream	Upstream	Downstream	Difference Across Valve	Cavitation Parameter	Valve Diameter (Inches)	Velocity (FPS)	C_v gpm/√psi	C_v cfs/√ft	% of Full Open C_v	Valve Angle (Degrees)
0	0.0	618	830	632	632	632	212	14	198	0.24	12	0.0	0	0.0	0.0	0
5	2.5	618	822	633	633	632	204	15	189	0.25	12	3.2	247	0.4	1.2	13
10	5.0	618	814	635	635	632	196	17	179	0.28	12	6.4	508	0.7	2.4	25
15	7.5	618	804	639	639	633	186	21	166	0.32	12	9.6	793	1.2	3.8	35
20	10.0	618	792	644	644	634	174	26	148	0.40	12	12.7	1119	1.6	5.3	42
25	12.5	618	777	651	651	634	159	33	126	0.52	12	15.9	1512	2.2	7.2	50
30	15.0	618	761	659	659	636	143	41	101	0.73	12	19.1	2027	3.0	9.7	57
35	17.5	618	742	669	669	637	124	51	73	1.16	12	22.3	2794	4.1	13.3	63
40	20.0	618	721	680	680	638	103	62	40	2.36	12	25.5	4284	6.3	20.4	72
45	22.5	618	698	693	693	640	80	75	5	23.88	12	28.7	14388	21.1	68.5	84

Valve Angle (Degrees)	% of Full Open C_v
5	0.2
10	0.9
15	1.4
20	1.8
25	2.4
30	3.1
35	3.7
40	4.7
45	5.9
50	7.2
55	9.0
60	11.2
65	14.1
70	18.0
75	24.5
80	41.5
85	73.0
90	100.0

Ball Valve Diameter (Inches)	C_v gpm/√psi	C_v cfs/√ft
12	21003	30.8

Acceptable Design Limits

Cavitation Parameter > 1.50
Velocity - Ball Valve < 30 fps
Velocity - Butterfly Valve < 16 fps
Velocity - Pipe/CML < 20 fps
Velocity - Pipe/Fusion Bonded Epoxy Lining < 30 fps
Valve Angle - 15 degrees minimum
Valve Angle - 75 degrees maximum

Schematic Diagram

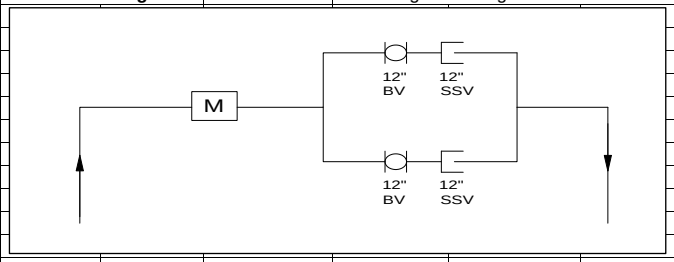

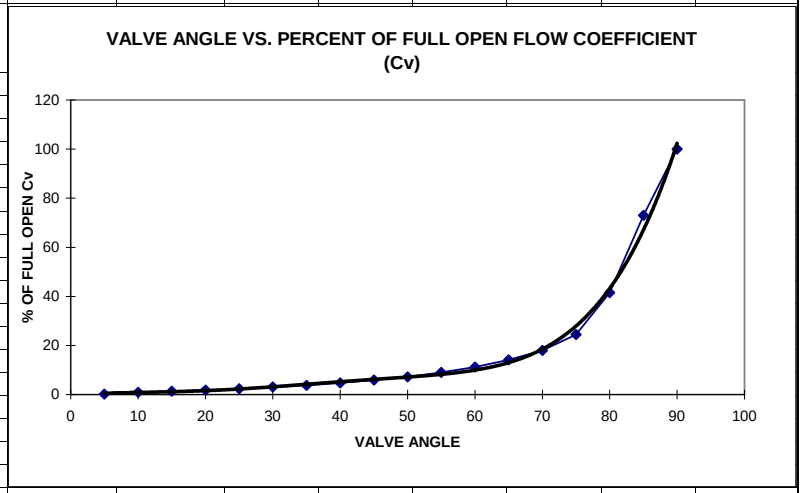

TABLE 7.2
BAKER WATER TREATMENT PLANT
FLOW CONTROL FACILITY - CAVITATION ANALYSIS
18-inch Ball Valve and 16-inch Static Sleeve Valve

Raw Water Flow to WTP (CFS)	Valve Elevation (Feet)	HGL (Feet) --18-INCH BALL VALVE		HGL (Feet) --16-INCH STATIC SLEEVE VALVE		BALL VALVE									
						Head (Feet)			Ball Valve						
		Upstream	Downstream	Upstream	Downstream	Upstream	Downstream	Difference Across Valve	Cavitation Parameter	Valve Diameter (Inches)	Velocity (FPS)	C_v gpm/√psi	C_v cfs/√ft	% of Full Open C_v	Valve Angle (Degrees)
0	618	830	632	632	632	212	14	198	0.24	18	0.0	0	0	0.0	0
5	618	822	633	633	632	204	15	190	0.25	18	2.8	247	0	0.5	7
10	618	814	635	635	632	196	17	180	0.28	18	5.7	507	1	1.1	12
15	618	804	638	638	633	186	20	166	0.32	18	8.5	791	1	1.7	19
20	618	792	643	643	634	174	25	149	0.39	18	11.3	1115	2	2.4	25
25	618	777	649	649	634	159	31	128	0.50	18	14.2	1502	2	3.2	31
30	618	761	657	657	636	143	39	104	0.69	18	17.0	2002	3	4.2	38
35	618	742	665	665	637	124	47	76	1.06	18	19.8	2728	4	5.8	45
40	618	721	676	676	638	103	58	45	2.02	18	22.6	4058	6	8.6	54
45	618	698	687	687	640	80	69	10	9.89	18	25.5	9517	14	20.1	72

Valve Angle (Degrees)	% of Full Open C_v	% of Full Open C_v	Valve Diameter (Inches)	C_v gpm/√psi	C_v cfs/√ft
5	0.2	0.2			
10	0.9	0.9	18	47256	69.3
15	1.4	1.4			
20	1.8	1.8	**Acceptable Design Limits**		
25	2.4	2.4	Cavitation Parameter > 1.50		
30	3.1	3.1	Velocity - Ball Valve < 30 fps		
35	3.7	3.7	Velocity - Butterfly Valve < 16 fps		
40	4.7	4.7	Velocity - Pipe/CML < 20 fps		
45	5.9	5.9	Velocity - Pipe/Fusion Bonded Epoxy Lining < 30 fps		
50	7.2	7.2	Valve Angle - 15 degrees minimum		
55	9.0	9.0	Valve Angle - 75 degrees maximum		
60	11.2	11.2			
65	14.1	14.1	Schematic Diagram		
70	18.0	18.0			
75	24.5	24.5			
80	41.5	41.5			
85	73.0	73.0			
90	100.0	100.0			

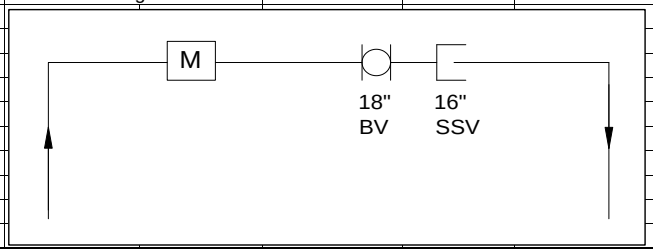

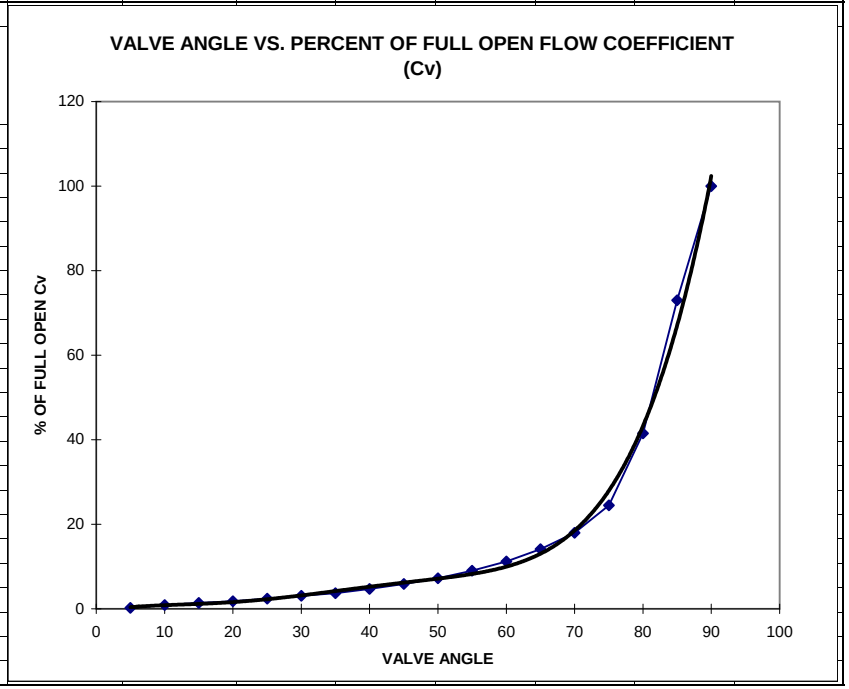

TABLE 7.3
BAKER WATER TREATMENT PLANT
FLOW CONTROL FACILITY - CAVITATION ANALYSIS
18-inch Angle Pattern Sleeve Valve

Raw Water Flow to WTP (CFS)	Valve Elevation (Feet)	HGL (Feet) --18-INCH SLEEVE VALVE		SLEEVE VALVE									
				Head (Feet)			Sleeve Valve						
		Upstream	Downstream	Upstream	Downstream	Difference Across Valve	Cavitation Parameter	Valve Diameter (Inches)	Velocity (FPS)	C_v gpm/√psi	C_v cfs/√ft	% of Full Open C_v	Stroke %
0	618	830	632	212	14	198	0.24	18	0.0	0	0.0	0.0	0
5	618	822	632	204	14	190	0.25	18	2.8	247	0.4	3.7	2
10	618	814	632	196	14	182	0.26	18	5.7	504	0.7	7.5	4
15	618	804	633	186	15	171	0.28	18	8.5	779	1.1	11.7	6
20	618	792	634	174	16	158	0.31	18	11.3	1081	1.6	16.2	8
25	618	777	634	159	16	143	0.35	18	14.2	1423	2.1	21.3	11
30	618	761	636	143	18	125	0.41	18	17.0	1826	2.7	27.3	15
35	618	742	637	124	19	105	0.50	18	19.8	2327	3.4	34.8	20
40	618	721	638	103	20	82	0.65	18	22.6	3000	4.4	44.9	27
45	618	698	640	80	22	58	0.96	18	25.5	4035	5.9	60.3	41

Stroke %	% of Full Open C_v	Valve Diameter (Inches)	C_v Bailey Model 812 gpm/√psi	C_v Bailey Model 812 cfs/√ft
5	10.0	18	6689	9.8
10	20.0			
15	27.0			
20	35.0			
25	42.0			
30	48.0			
35	53.0			
40	58.0			
45	64.0			
50	68.0			
55	73.0			
60	77.0			
65	80.0			
70	83.0			
75	85.0			
80	88.0			
85	91.0			
90	94.0			
95	97.0			
100	100.0			

Acceptable Design Limits

Cavitation Parameter - No minimum
Velocity - Sleeve Valve < 30 fps
Velocity - Butterfly Valve < 16 fps
Velocity - Pipe/CML < 20 fps
Velocity - Pipe/Fusion Bonded Epoxy Lining < 30 fps
Stroke - No Min - No Max

Schematic Diagram

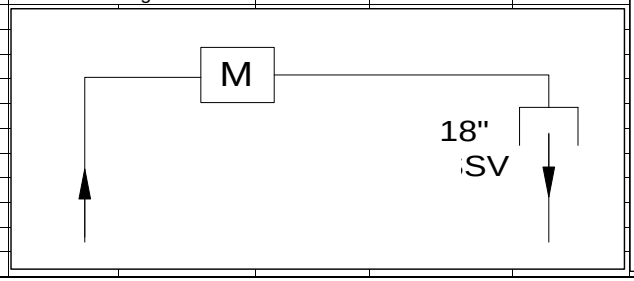

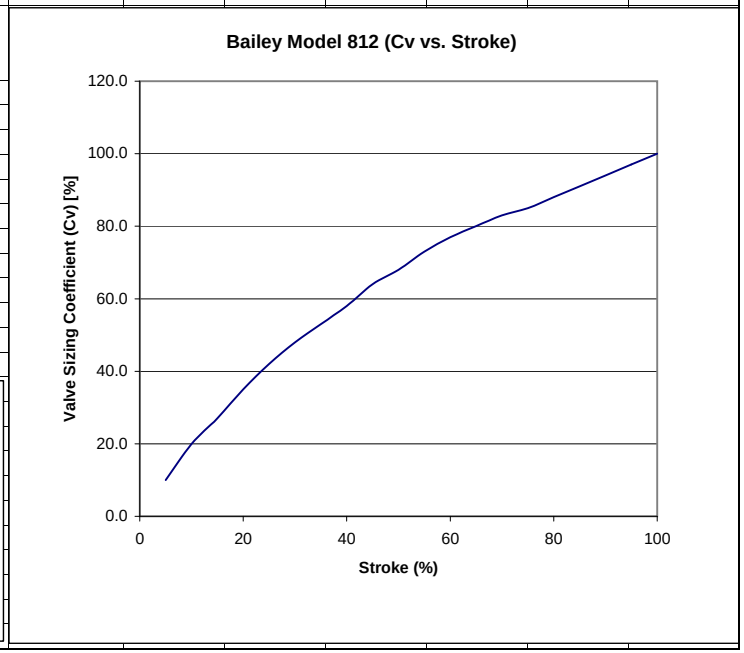

7.3 SITE IMPROVEMENTS

Several factors influenced the location of the flow control facility.

- Lower elevation of the flow control valve allows greater back pressure on the valve and the less potential for cavitation.
- The lower elevation eliminates the need for a vault of about 15 feet of depth.
- An additional advantage of the location is that it provides for a longer raw water pipeline, which equates to greater chlorine dioxide contact time.

The flow control facility will be located along the access road to the Baker site, and northeast of the existing connection to the Baker Pipeline as shown on Exhibit 7.3. The flow control facility will be constructed into the existing slope, requiring a wall for retainment of 5 +/- feet on the back side of the facility. Along the access road, the facility will include extension of the wall or bollards to protect all mechanical equipment. An enclosure will be considered for sound attenuation.

Exhibit 7.3 Flow Control Facility Site

7.4 ACCEPTABLE DESIGN LIMITS

Acceptable design limits (per Table 7.4) were used for the design of the flow control facility:

Table 7.4 Acceptable Design Limits

Component	Maximum Velocity (cfs)	Minimum Cavitation Parameter	Valve Angle or Stroke	
			Minimum	Maximum
Pipe Lining				
Cement Mortar	20	NA	NA	NA
Fusion Bonded Epoxy	30	NA	NA	NA
Valves				
Butterfly	16	-	-	-
Ball	30	1.5	15 degrees	75 degrees
Sleeve	30	0.15	5-percent	None

The cavitation parameter is calculated by dividing the downstream absolute pressure by the pressure drop across the valve. The lower the number, the greater the cavitation potential. Therefore, for the same downstream conditions, a sleeve valve can break ten times the head that a ball valve can without cavitating.

7.5 DESIGN CRITERIA

The design criteria for the flow control facility are summarized in Table 7.5.

Table 7.5 Flow Control Facility Design Criteria

Description	Units	Value
Location: Parallel to the access road east of the valve vault.	-	-
Mechanical	-	-
Upstream (Raw Water) Pipeline Diameter	IN	24
Reduced Pipe Diameter	IN	18
Flow Control Valve Type: Motor Operated Sleeve Valve	-	-
Sleeve Valve Diameter	IN	18
Downstream (Raw Water) Pipeline Diameter	IN	48

SECTION 8 IRON AND MANGANESE MANAGEMENT

8.1 OVERVIEW

The Baker WTP will require pretreatment for the management of iron and manganese in the ILW raw water supply. Pretreatment is essential for prevention of membrane fouling. Pretreatment, in conjunction with membrane treatment, will mitigate potential aesthetic issues and ensure compliance with Secondary MCLs.

Membrane filtration requires periodic cleaning such as conventional backwash and chemically enhanced backwash (CEB). Membranes may also be cleaned in place (CIP) to maintain production.

Filtered water and sodium hypochlorite are typically used to prepare the cleaning solutions. Pilot test data indicate that chlorine concentration in the cleaning solutions for Baker WTP could vary from 400 mg/L for CEB to 1,000 mg/L for CIP solution. With such chlorine concentrations, dissolved iron and manganese present in the filtered water will be oxidized in the cleaning solutions and precipitate on the membranes. Every backwash will push the oxidized iron and manganese into the membrane pores instead of removing them creating a fouling condition that is difficult to reverse.

Iron and manganese concentrations reported in this work are below historical levels and existed primarily in oxidized (filterable) solids form before pre-treatment. However, there is a significant potential for manganese to be present in its dissolved form in ILW. This could result in rapid membrane fouling and elevated manganese concentrations in finished water if manganese is not adequately oxidized upstream of the membrane filtration process.

Iron and manganese may also generate aesthetic issues such as staining of laundry and fixtures. Iron and manganese could also be detrimental to various industrial processes. As a consequence, the USEPA has set the SMCL at 0.3 mg/L for iron and 0.05 mg/L for manganese.

Bench testing conducted for the Baker WTP showed that treating ILW with a chlorine dioxide preoxidation ahead of the membrane filtration process will minimize membrane fouling, while meeting finished water iron and manganese goals.

8.2 OBJECTIVES

The three primary objectives of iron and manganese management are:

- Production of finished water with iron concentration and manganese concentration below their respective SMCL
- Prevention of membrane fouling-Review of literature and troubleshooting of membrane plants suggests that an iron concentration as low as 0.05 mg/L and a manganese concentration as low as 0.02 mg/L is an appropriate target.
- Minimization of customer aesthetic complaints-Review of literature suggests that iron levels as low as 0.1 mg/L and manganese levels as low as 0.02 mg/L in the finished water could generate complaints.

The following treatment goals were established to achieve the objectives:

- Manganese level in MF feed water: 0.02 mg/L
- Iron level in MF feed water: 0.05 mg/L
- Monitor and control concentrations and dosing rates of oxidant chemicals for minimizing residual disinfectant level and ensure compliance with the Maximum Residual Disinfectant Level (MRDL).

8.3 OXIDATION

Oxidation is recommended for the pretreatment process. Oxidation of dissolved manganese requires either higher oxidant dosage or longer contact time than oxidation of dissolved iron. Therefore, selection of the oxidant chemical must be based on manganese oxidation. Oxidant chemicals considered for use at the Baker WTP, include:

- Potassium Permanganate
- Ozone
- Sodium Hypochlorite
- Chlorine Dioxide

Potassium permanganate was disregarded because of its operational challenges and the risk of pink water events in case of overdosing. Ozone was disregarded because of the risk of fatal damage to the membranes with any residual. It was

determined that bench testing must be conducted to distinguish between sodium hypochlorite and chlorine dioxide.

8.4 BENCH TESTING

A supplemental bench-testing program was conducted to support design criteria for oxidant selection, dose, and required contact time upstream of the membrane filtration system. Irvine Lake water samples were taken at a sampling station on the Irvine Lake Pipeline just upstream of the existing Irvine Lake Pipeline Disinfection Facility in Irvine Regional Park.

The bench-testing included analysis of sodium hypochlorite and chlorine dioxide for further evaluation of required dose and contact time. Sodium hypochlorite was abandoned because it could not achieve the required level of manganese oxidation in 20 minutes, which would have required a contact basin too large to fit on the plant site. Based upon the results of the bench-test program, the Baker WTP design should:

- Incorporate injection of chlorine dioxide downstream of the flow control facility based on the measure flow rate of raw water to the forebay.
- Achieve a minimum contact time of 5 minutes upstream of the membranes in order to oxidize dissolved manganese and achieve the treatment objectives defined in Section 8.2. The bench-test program confirmed that dissolved iron was undetectable after oxidation by chlorine dioxide.

8.5 OXIDANT GENERATION

Chlorine dioxide cannot be compressed or stored commercially as a gas because it is explosive under pressure. Therefore, it is manufactured on site and never shipped. In addition, strong aqueous solutions of chlorine dioxide will release gaseous chlorine dioxide into a closed atmosphere above the solution at levels that may exceed critical concentrations. For drinking water applications, chlorine dioxide aqueous solutions between 0.1 and 0.5 percent (e.g., 1,000 mg/L and 5,000 mg/L) are typically produced at the point of use from two alternative generation methods:

1. Two chemicals: sodium chlorite, and chlorine gas
2. Three chemicals: sodium chlorite, sodium hypochlorite, and hydrochloric acid

Comparison of chlorine dioxide generation methods is provided in Table 8.1.

Table 8.1 Pros and Cons of Chlorine Dioxide Generation Methods

Generation Method	Pros	Cons
Sodium Chlorite Chlorine Gas	- Most efficient production method (95% yield) - Lower O&M cost ($4.60 per pound of chlorine dioxide)	- Hazards associated with on-site storage and handling of chlorine gas (150 lb cylinders)
Sodium Chlorite Sodium Hypochlorite[1] Hydrochloric Acid	- Use of sodium hypochlorite is less hazardous than chlorine gas - Sodium hypochlorite already used for cleaning membranes	- Less efficient production method (90% yield) - Degradation of sodium hypochlorite solution - Potential low pH - Higher O&M cost ($5.45 per pound of chlorine dioxide)[2]

Notes
1. 12.5 percent solution is used. The use of 0.8 percent solution to produce chlorine dioxide is unproven. The same 12.5 percent solution will be used for membrane CEB and CIP
2. Cost for 28 mgd and a chlorine dioxide dose of 1 mg/L is estimated to be at $12.70 per acre-foot for the two chemical generation method and $15.00 per acre-foot for the three chemical generation method.

Despite the technical benefits and the lower O&M costs of the two-chemical generation method, IRWD selected the three-chemical generation method for operator safety and neighborhood acceptance.

8.6 OXIDANT PACING METHOD

Two pacing methods are available for each of the two generation methods described in the previous paragraph.

For the **automatic or direct method**, the concentration of the chlorine dioxide solution delivered by the generator is continuously adjusted to the WTP flow set point and the chlorine dioxide demand. Concentration of the chlorine dioxide solution is measured by means of an optical analyzer. When sodium hypochlorite is used in lieu of chlorine gas, a pH loop may be added, as the liquid phase reaction is best achieved at low pH. Automatic control valves and flow meters are used to ensure the correct ratio of chemicals is continuously combined together. The water flow rate through the generator is constant. The chlorine dioxide solution is directly injected into the process piping by the generator.

For the **batch method**, the concentration of the chlorine dioxide solution produced by the generator is set at a fixed rate. Water flow rate through the generator is also constant. A high concentration chlorine dioxide solution is stored in a batch tank. Storage time is limited to avoid significant degradation. Metering pumps are flow paced to achieve the required dosing turndown ratio.

Comparison of chlorine dioxide pacing methods is provided in Table 8.2.

Table 8.2 Pros and Cons of Chlorine Dioxide Pacing Methods

Pacing Method	Pros	Cons
Direct	Less equipment No chlorine dioxide solution tank No need for scrubber	Turndown ratio limited by the hydraulic requirements of the Venturi and the optimum reaction conditions Backpressure limited to 30 psi Generator continuous operation More maintenance Risk of forming chlorate at plant low flow
Batch	Infinite turndown ration with metering pump and mass flow meter Dosing concept similar to other chemicals with metering pump Generator operates at a constant set point. Turns on/off on batch tank level Less maintenance Inventory of chlorine dioxide solution allows for response time for routine maintenance Better consistency of the chlorine dioxide dose	Chlorine dioxide solution tank Floating cover or vapor eductor More expensive equipment Larger footprint

The batch pacing method is selected in order to provide a more robust and more reliable chlorine dioxide generation system.

8.7 OXIDANT RESIDUAL CONTROL

The use of chlorine dioxide for the Baker WTP Project beckons consideration of residual control in the product water.

Chlorine Dioxide

The MRDL for chlorine dioxide leaving the Baker WTP is 0.8 mg/L. Also, the maximum continuous level of chlorine dioxide acceptable to the potting of the Pall membrane module is 0.2 mg/L.

Chlorine dioxide in water does not hydrolyze to any appreciable extent but remains in solution as a dissolved gas. Therefore, chlorine dioxide dosage shall be adjusted based on iron and manganese levels in ILW. The adjustment will be indirectly achieved through the operation of an on-line chlorine dioxide analyzer on the MF feed water pipeline.

Chlorine dioxide residual can be destroyed by sunlight or other sources of ultraviolet (UV) light. Continuous operation of UV reactors for disinfection purpose should eliminate any traces of chlorine dioxide in the finished water at the Baker WTP.

Chlorite

Typically, the reaction of chlorine dioxide produces approximately 50 to 70 percent conversion of chlorine dioxide to chlorite (weight to weight basis). The bench-scale testing study confirmed the 50 percent conversion for initial chlorine dioxide doses of 1.0 mg/L and 1.5 mg/L. The MCL for chlorite leaving the Baker WTP is 1.0 mg/L. Therefore, a maximum dosage limit of 1.4 mg/L for chlorine dioxide should prevent the need for reducing chlorite level in the finished water.

The Office of Environmental Health Hazard Assessment has finalized a Public Health Goal (PHG) of 0.050 mg/L for chlorite. The PHG is set at a level at which no known or anticipated adverse effects on health occur with an adequate margin of safety. The PHG is not based on a risk/benefit analysis; it is not an MRDL, and compliance is not required. However, when a PHG is exceeded, it is commonly mentioned in the annual water quality report issued to the customers.

Two methods of compliance (if required in the future) are presented in the following paragraphs. The methods are the use of ferrous iron as an additional pretreatment step and the use of GAC contactors downstream of the membrane system.

- Ferrous iron has been proven to reduce both chlorine dioxide and chlorite to chloride without forming additional chlorate. However, ferrous iron could resolubilize manganese dioxide because manganese dioxide can act as an electron acceptor in a reducing environment. To minimize the risk of resolubilization of manganese dioxide, ferrous chloride or ferrous sulfate should be added 5 minutes after the addition of the coagulant. The practical implementation of the approach would require a clarification process upstream of the membrane feed pumps as the 5-minute lag time cannot be achieved in-line between the flash-mix system and the MF system. Footprint will be reserved on the proposed site layout.

- Granular Activated Carbon (GAC) contactors can remove chlorite by adsorption and chemical reduction. As the contactors are operated with no chlorine, the formation of chlorate is minimized. Further bench-testing would be required to assess the chlorite removal achieved with GAC.

Other Residuals

Generation of chlorine dioxide may also generate chlorate and chloride.

Chlorate is unregulated for now. However, California Department of Public Health requires that a notification be issued for levels of chlorate in the finished water at or above 0.8 mg/L. The bench-scale testing study indicated that less than 0.25 mg/L of chlorate should be produced when dosing chlorine dioxide at 1.4 mg/L. Also, the additional chlorate that could be formed by reaction of the residual chlorite with sodium hypochlorite should not lead to a chlorate concentration above the notification level. No known treatment exists for removing chlorate when formed. The practical approach for minimizing chlorate at the Baker WTP is to:

- Install a batch generator that will always produce high concentrations of chlorine dioxide and therefore promote low initial formation of chlorate
- Monitor and control the pH of the reaction that produce chlorine dioxide to prevent the generator from operating at high pH
- Monitor and control the chlorine dioxide residual at the treatment building

Chloride has a SMCL of 250 mg/L. The magnitude of chloride ions formed during the generation of chlorine dioxide and the dosing of chlorine dioxide at 1.4 mg/L will not measurably increase the chloride ion concentration in the raw water.

8.8 OXIDANT MONITORING

Analytical equipment will be required to monitor the performance of the chlorine dioxide generator and ensure compliance with the chlorine dioxide MRDL and the chlorite MCL. The analytical chemistry of chlorine dioxide is complicated by the chemical's volatility and sensitivity to light. Some analytical methods may be labor-intensive and require a high level of technical skill. The preliminary monitoring program includes:

- Quarterly checking of the generator performance
- Daily sampling for chlorine dioxide at the entrance to the distribution system
- Daily sampling for chlorite at the entrance to the distribution system

- Monthly three-sample set in the distribution system for chlorite
- Daily sampling for chlorate at the entrance to the distribution system

Amperometric titration methods will be used for compliance monitoring of the chlorine dioxide residual and chlorite concentrations in the distribution system as well as for determining the purity of the chlorine dioxide delivered by the generator. The amperometric titrator will be installed at the Baker WTP in the treatment building.

8.9 DESIGN CRITERIA

The design criteria for the iron and manganese management facilities are summarized in Table 8.3.

Table 8.3 Iron and Manganese Management Design Criteria

Description	Units	Value
Maximum Dissolved Manganese Concentration in MF Feed Water	MG/L	0.02
Maximum Dissolved Iron Concentration in MF Feed Water	MG/L	0.05
Generator Type: Batch; 3-chemicals	-	-
Generator Number: 1 (with space for future standby generator)	-	-
Maximum Chlorine Dioxide Dose	MG/L	1.4
Minimum Generator Capacity	Pound per day	350
Required Minimum Contact Time in the Forebay	MIN	5
Total Hydraulic Residence Time in the Forebay (per design)	MIN	10
Additional Contact Time in the Upstream Piping	MIN	7
Note: sodium chlorite, sodium hypochlorite, and hydrochloric acid storage facilities, as well as chlorine dioxide feed system are described in Section 13		

SECTION 9 FOREBAY

9.1 INTRODUCTION

A forebay will be constructed at the Baker WTP:

1. To provide an equalization volume upstream of the membrane filtration system (MFS). The equalization volume allows the Baker WTP to be fed at a constant flow and the MFS to be operated at a typical variable flow; therefore reducing the size of the MFS.

2. To provide a surge control volume large enough to close the plant raw water flow control valve in a time long enough to minimize pressure surges and protect the integrity of the pipeline upstream of the Baker WTP.

3. To provide a contact volume corresponding to the minimum contact time of 5 minutes identified in Section 8 for chlorine dioxide to oxidize dissolved manganese before filtration by the MFS.

4. To support the installation of the membrane feed water pump station. The six membrane feed pumps are each installed in a separate bay at the end of the equalization basin. The pump station and its operation are described in Section 10.

The Baker WTP is a base loaded plant. Therefore, the forebay must be designed to minimize the downtime associated with maintenance activities. As such, the design of the forebay accounts for two 50-percent capacity cells within the forebay. Each cell includes a 50-percent capacity contact basin, followed by a 50-percent capacity equalization basin. Each cell within the forebay is designed with a dedicated 48-inch diameter overflow.

9.1.1 Capacity

The total capacity of the forebay will be 785,000 gallons, made up of:

- The *equalization volume* of the forebay is 500,000 gallons, as agreed with the MFS suppliers and as specified in the Membrane Procurement Package. The volume is equally split between the two cells of the forebay. Appendix F includes a depiction of the variation in level in the forebay as a result of maintenance (backwash, CIP) and integrity testing of the membrane filtration system.

- The *total contact volume* of the forebay is 210,000 gallons. It corresponds to a hydraulic residence time of 10 minutes at plant full

capacity with a T_{10} (time that 10 percent of the water leaving the basin has a residence time equal to or less than) to T ratio of 0.5. Therefore, the contact volume achieves the minimum chlorine dioxide contact time of 5 minutes discussed in Section 8. The volume for contact is equally split between the two cells of the forebay.

- The *surge control volume* is 75,000 gallons based on a minimum flow control valve closure time of three minutes, as discussed in Section 7. The surge volume is added as freeboard on top of the equalization basins and contact basins.

Appendix F includes the calculation of total forebay capacity.

9.1.2 Hydraulics

Raw water will enter the two contact basins in parallel through 36-inch pipeline and 36-inch butterfly valves. Both contact basins will be operated at a constant water level (EL. 632.0) set by an outlet weir. The contact basins will be hydraulically connected through the raw water pipeline. Raw water will be forced below an under baffle wall before flowing over/through an above baffle/diffusion wall. This design will improve the efficiency of the contact basin (e.g., increase T_{10}/T as required) for the chlorine dioxide that does not hydrolyze and remains as a dissolved gas in water.

Beyond the contact basin raw water will flow into each of the two equalization basins. The equalization basins are operated at variable level, with a maximum operational water level of EL. 631.0. From the equalization basins, the water is pumped by the feedwater pump station to the MFS. The equalization basins are hydraulically connected through a normally open 48-inch by 48-inch flushed bottom slide gate. During maintenance of one half (or one cell) of the forebay, the slide gate will be closed to isolate each half.

9.2 FOREBAY CONSTRUCTION

The forebay will be constructed within the existing slope area behind the former Baker Filter Building. Exhibit 9.1 (Drawing M15) shows the forebay planned to have dimensions of 88 feet by 130 ft and depth varying from 16 feet to 23 feet. A pump-bay will be constructed to provide adequate suction head and flow distribution for the vertical turbine pumps planned for the Feedwater Pump Station. A section of the forebay is provided as Exhibit 9.2 (Drawing M16).

9.2.1 Covers

Top concrete slabs will be constructed over the contact basins to prevent destruction of the chlorine dioxide residual by sunlight. Additionally, because chlorine dioxide does not hydrolyze (remains as a dissolved gas in water), a slight negative pressure (e.g., 2-inch of water) will be maintained below the top slab of the contact basins by use of fans, to minimize leakage of chlorine dioxide above the water surface.

Strainers to protect the membrane hollow fibers will be installed downstream of the Feedwater Pump Station. As a result, the equalization basins were considered with an open top. However, algae may grow in the basins of the forebay if no roof is constructed. Algae growth would most substantially impact the Project by creating taste and odor events, and impairing the operation of the strainers. Therefore, structurally supported retractable fabric covers from Geomembrane Technology Inc. (GTI), or alternative covers preferred by the District will be specified over the top of the equalization basins.

9.2.2 Access

Access to each contact and equalization basin will be provided by two 36-inch by 36-inch hatches or removable covers, with a ladder at each and access safety equipment (Safe-T-Climb system or equivalent). A total of eight hatches for access will be provided.

9.2.3 Earthwork

The location of the forebay impacts the extent of grading and shoring necessary for construction. The proposed ground elevation at the forebay is (EL.) 635 ft +/-, and the top of bottom slab is anticipated to be (EL.) 613 ft +/-. Slopes exist to the north and west of the forebay. The slope to the north should be protected with the use of shoring. The inlet pipelines into the reservoir will penetrate the forebay in the upper third of the wall, which will minimize excavation out to the property line to the north. The manufactured slope to the west will also require shoring during construction.

9.2.4 Drainage

The forebay will be drained by opening the normally closed 24-inch by 24-inch flushed bottom slide gates and turning on one of the membrane feed pumps at low speed. The floor of the forebay slopes toward the drains.

When the low-low level alarm that protects the membrane feed pump is activated, the remaining water will be removed by a drain or sump pump. If a drain pipeline is not utilized, then hydraulic and electrical connections will be available at low point in the membrane feed pump wet wells for connection of a temporary sump pump.

The forebay will be constructed with an exterior drainage system to convey any water trapped in the soil surrounding the tank to drain. This will allow the forebay to be designed for a drained condition (i.e. no hydraulic lateral surcharge). The system will consist of perforated PVC pipeline installed around the perimeter of the structure.

9.3 MAINTENANCE

One-millimeter backwashable strainers will be installed upstream of the flow control facility in order to prevent blockage of the sleeve valve. These strainers will also minimize the accumulation of solids in the forebay. Nevertheless, solids will accumulate in the forebay over time. In order to facilitate solids removal, the bottom slabs are designed with a 2.5 percent slope directed towards the membrane feed pump wet wells. Accumulated solids can be hosed down to the wet wells for removal by the temporary sump pump.

9.4 DESIGN CRITERIA

The design criteria for the forebay are summarized in Table 9.1.

Table 9.1 Forebay Design Criteria

Description	Units	Value
Structural		
Type: unlined reinforced cast-in-place concrete	-	-
T_{10} / T = 0.5	-	-
Contact Volume (2 x 105,000 gallons)	GAL	210,000
Equalization Volume (2 x 250,000 gallons)	GAL	500,000
Surge Volume	GAL	75,000
Total Volume	**GAL**	**785,000**
Mechanical		
Piping Material: cement mortar lined steel	-	-
Slide Gate, Hatch, and Ladder Material: 316 stainless steel	-	-
Structurally Supported Retractable Cover: GTI or equal	-	-

SECTION 10 FEED WATER PUMP STATION

10.1 INTRODUCTION

The membrane filtration system (MFS) will be fed by the feed water pump station (FWPS) located in the forebay. The pumping requirements are MFS-specific, and detailed pump criteria will be developed once a MFS is selected. For purpose of estimating costs and developing a forebay layout (see Section 9), pumping requirements are presented in this section based on similar project experience and projections based on preliminary operating conditions provided by Pall and Siemens.

10.1.1 Capacity

Maximum FWPS capacity has been estimated at 35 mgd, based on an "instantaneous factor" (IF) of 1.25 and a net production of 28 mgd. The IF is defined as the ratio of the maximum instantaneous flow rate to the net production rate. This value has been selected based on preliminary information provided by Pall and Siemens. The IF is based on system and project specific factors that will be determined after a MFS supplier is selected.

The IF is derived by the membrane supplier to determine the flow rate each rack needs to produce while in filtration mode to make up for membrane cleaning down time and excess filtrate production needed for backwash and chemical cleaning cycles.

The MFS feed flow will be less than the 35 mgd when the following cleaning events occur:

- Backwash - Up to 2 racks out of service simultaneously for 2-4 minutes. An estimated 1000 individual backwashes occur per day at minimum anticipated backwash intervals (20 minutes).
- Chemically cleaning (enhanced backwash or clean-in-place) - One rack at a time for 1 hour to 7 hours. A maximum of 14 chemical cleaning events per day (one per rack) has been specified in the procurement documents.
- Direct Integrity testing – One rack at a time for approximately 30 minutes, not to coincide with a chemical cleaning. One integrity

test per day is required by regulation (a maximum of 14 racks is specified in the procurement documents).

The cycling of racks into and out of service results in rapid changes in FWPS flow. Exhibit 10.1 presents modeled feed flow rate variations for a membrane system operating at an IF of 1.25. Abrupt decreases in flow indicate a rack taken off line; abrupt increases in flow indicate a rack brought back on line.

10.1.2 Hydraulics

The hydraulic profile presented in Section 3 is based on a maximum instantaneous flow of 35 mgd and a maximum headloss through the membrane rack of 37 psi. These values are subject to change based on specific supplier requirements after membrane system selection.

Table 10.1 Feed Water Pump Station Hydraulics

Description	Parameter
Hydraulics (Suction)	
Water Level in Forebay[1]	621 - 631 ft
Maximum Flow[2]	54 cfs
Maximum static lift between forebay and membrane system	10 ft
Hydraulics (Discharge)	
Minor losses between feed pump discharge and membrane rack[2]	6 ft
Losses through strainer, associated isolation valves and manifolds[2]	16 ft
Losses through membrane system[3]	87 ft
HGL at filtrate manifold[4]	644 ft
HGL at Raw Water Pump Station[2,3]	753 ft

Notes:
1. Water level in forebay to vary under normal operation to cycling of membrane racks through cleaning cycles and integrity testing.
2. Loss estimated based on estimated maximum flow between the FWPS and the membrane racks. Actual value to be determined based on selected membrane system and supplier guaranteed maximum for the project.
3. Losses estimated based on previous project experience. Actual value to be determined based on selected membrane system and supplier guaranteed maximum for the project.
4. Filtrate manifold elevation to be fixed in order to keep membrane racks under the HGL.

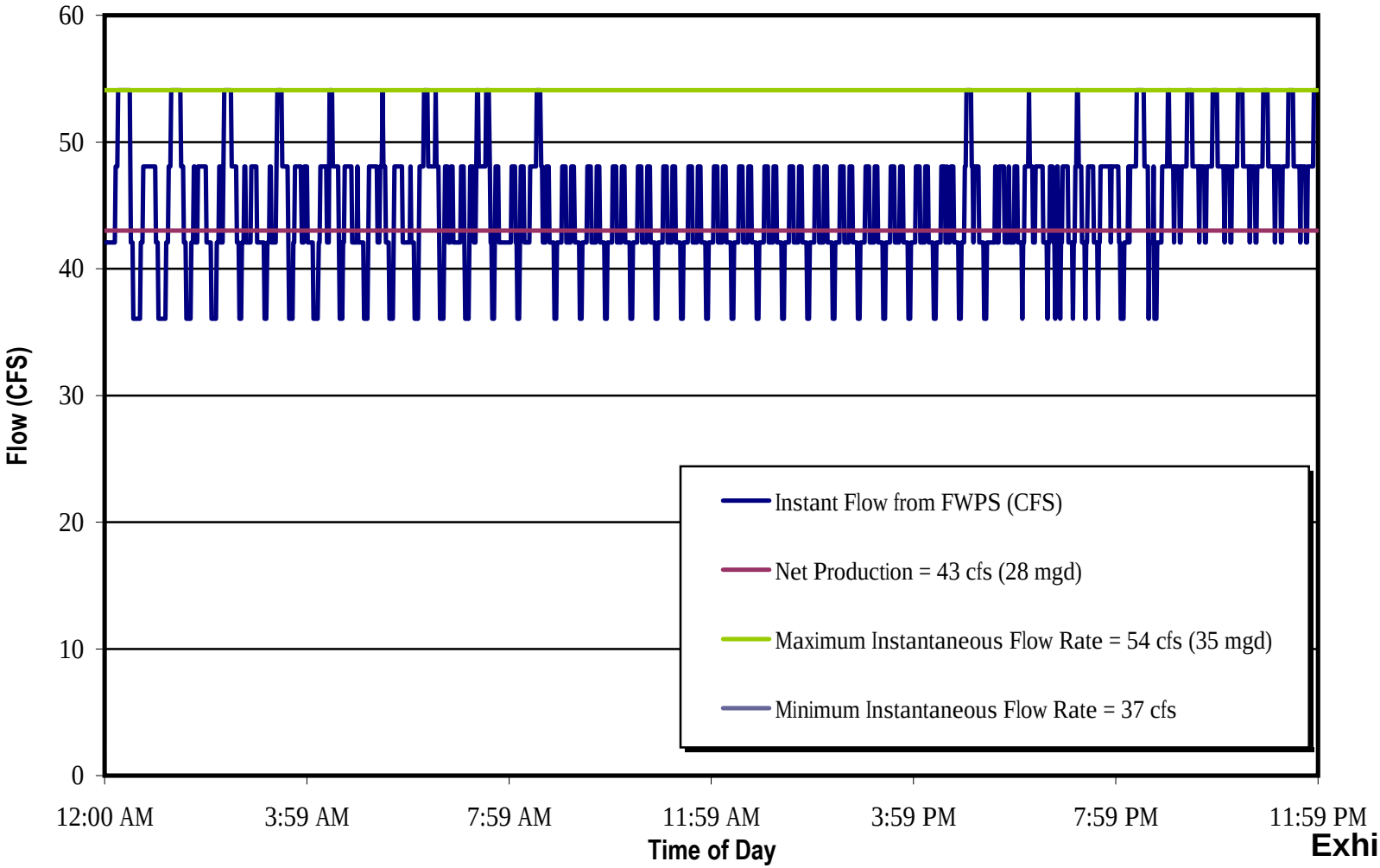
60
50
40
30
20
10
0
Flow (CFS)
12:00 AM
3:59 AM
7:59 AM
11:59 AM
3:59 PM
7:59 PM
11:59 PM
Time of Day
Instant Flow from FWPS (CFS)
Net Production = 43 cfs (28 mgd)
Maximum Instantaneous Flow Rate = 54 cfs (35 mgd)
Minimum Instantaneous Flow Rate = 37 cfs

Exhibit 10.1

Upstream hydraulics

- The forebay level will be allowed to vary between high and low levels according to instantaneous membrane flow demands.

Downstream hydraulics

- Control pressure is governed by the membrane rack feed water control valve.
- Position of (and headloss through) the control valve is governed by the pressure setpoint and the transmembrane pressure of the rack.
- Control pressure setpoint will be determined by the MFS PLC based on control valve position of the most fouled (highest TMP) membrane rack.

10.1.3 Operation

A preliminary control description is presented below.

Primary Pump Control

- Pumps will operate on pressure control from PIT XXX-XX, located in the treatment building.
- Pressure will be determined primarily within the MF system PLC, and sent to SCADA, which will control the pumps.
- One of the 6 feed pumps will serve as an installed redundant pump.
    - Redundant pump to be used to provide additional flow as required in Forebay Level Control (FLC) mode.
- A hardwired LOW-LOW level switch will shut down MF feed pumps
- LIT XXX-XX will initiate Forebay Level Control (FLC) mode as necessary to maintain the forebay between High and Low levels.

Secondary Pump Control

- FLC Mode will be accomplished through an automatic override of the operator selected production set point (up or down depending on the forebay level).
- The new setpoint is then signaled to the MPLC, which in turn adjusts the flow through the membrane racks.
-
- At LOW level, the SCADA will decrease the operator selected production

setpoint by 25%.

- Hold value for 10 minutes, recheck level. If level is above the LOW level, hold setpoint.
- If level is still below LOW level, readjust flow setpoint by the following formula:
- Flow in MGD = OPERATOR SETPOINT *
  - (Max Adjustment at LOW LOW LEVEL (%)+((Max Adjustment at LOW LOW LEVEL (%)-Initial Adjustment at LOW LEVEL(%)/(LOW LEVEL (FT)-LOW LOW LEVEL(FT)))*Measured Level (ft))
- Recheck level in 10 minute increments. LOW-LOW level shut off by level switch.
- Forebay level control mode will be maintained until the forebay level is 5 feet.

- At HIGH LEVEL, the SCADA will increase the operator selected production setpoint by 10%.
  - Hold value for 10 minutes, recheck level. If level is BELOW than HIGH LEVEL, hold setpoint.
  - If level is still ABOVE HIGH LEVEL, readjust flow setpoint by the following formula:
    - =1+((Max Adjustment at HIGH HIGH LEVEL(%)-Initial Adjustment at HIGH LEVEL(%))/(HIGH HIGH LEVEL(ft)-HIGH LEVEL(ft)))*(Measure Forebay Level (ft)-HIGH LEVEL (ft))+Initial Adjustment at HIGH LEVEL(%))
  - The maximum production rate will be capped at 10% greater than rated MF plant capacity.
  - SCADA will signal the flow control valve to begin closing if the water level in the forebay exceeds HIGH HIGH LEVEL.
  - Forebay level control mode will be maintained until the forebay level is 5 feet.

10.2 DESIGN CRITERIA

Vertical turbine pumps are recommended for the FWPS. Minimum footprint requirements and ability to pump from a buried forebay are the primary criteria for this recommendation.

10.2.1 Structural

- Pumps will be mounted on the top slab of the forebay.
- A concrete masonry block building will be constructed on top of the forebay, around the FWPS, strainer, and flash mix equipment. Building footprint will be 64' x 72'.

10.2.2 Pump

Table 10.2 Feed Water Pump Design Criteria

Feedwater Pump Station	Units	Values
Location: Above Forebay	-	-
Pump Station Design Capacity (Range)	CFS	27 to 54
Pump Type: Vertical Turbine with VFD	-	-
No. of Pumps	NO.	6
No. of Redundant Pumps	NO.	1
Design Flow Range per Pump	GPM	4,861
Mechanical	-	-
Discharge Pipeline Diameter	IN	18
Isolation Valve Size	IN	18
Flow Meter Size	IN	30
Discharge Header Pipeline Diameter	IN	42

10.2.3 Mechanical

A preliminary mechanical equipment layout sketch is provided in Exhibit 10.2.

10.2.3.1 Piping

Piping in the pump discharge manifold through the strainer will be mortar lined steel. Piping material between the strainer and the membrane filtration system will be selected to minimize risk of membrane damage due to corrosion byproducts from the pipe. Piping material must be coordinated with membrane system supplier in order to maintain membrane warranty. Candidate materials are 316 stainless steel and mortar lined steel.

10.2.3.2 Mechanical Design Criteria

Valves used in the FWPS are shown schematically in Exhibit 10.2, and listed in Table 10.

Table 10.3 FWPS Mechanical Criteria

Equipment	Count	Size	Description
Check Valves	6	16-inch	Silent Check
Butterfly Valves	6	16-inch	Manual – Gear Operator (FW Pumps)
Butterfly Valves	3	16-inch	Manual – Gear Operator (Pressure Relief)
Butterfly Valves	6	24-inch	Manual – Gear Operator (Strainers)
Butterfly Valves	2	12-inch	Manual – Gear Operator (Flash Mix Pump)
Globe Valve	1	16-inch	Pressure Relief
Air Valves	6	4-inch	Combination Air Vac / Release (FW Pumps)
Air Valve	1	2-inch	Air Release
Meter	1	30-inch	Magnetic
Surge Tank	TBD	-	Hydropneumatic

10.2.3.3 Metering

Flow from the FWPS will be metered on the common discharge manifold by a 30” magnetic flow meter.

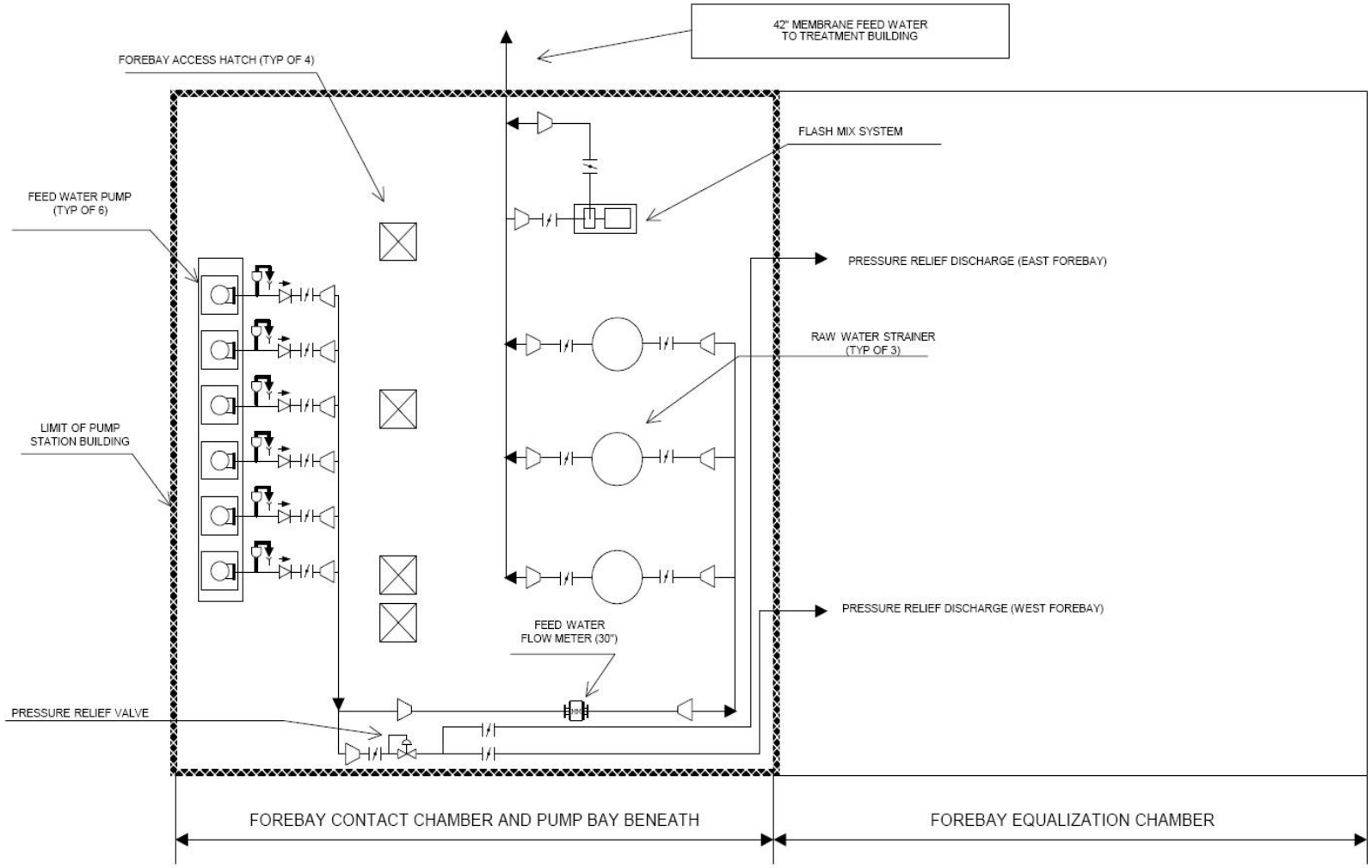

PLAN
NOT TO SCALE

Feedwater Pump Station Layout
Exhibit 10.2

SECTION 11 Strainer/Flash Mix System

11.1 OVERVIEW

Pretreatment will be required upstream of the microfiltration (MF) membrane system at Baker WTP to achieve:

- Large solids removal to assist in protecting membrane fibers from damage and irreversible fouling.
- Total organic carbon (TOC) removal to assist with disinfection byproducts (DBP) control.
- Iron and manganese removal (see Section 8).

11.2 FEEDWATER STRAINERS

Membrane feed water strainers are used to remove debris and large particles from feed water that can damage and/or plug membrane hollow fibers and pores. Damaged membrane fibers can result in non-compliance with required log removals, requiring downtime for fiber repair and loss of plant capacity. As such, MF system suppliers require straining as part of their membrane module warranty.

Self-cleaning strainers are the most common type of screen for membrane filtration pretreatment. Other types of equipment such as basket screens and cartridge filters are not practical in surface water applications due to frequency of screen change outs and manual cleaning.

Potential manufacturers of the feed water strainers with relevant membrane experience include: Amiad, Boll, and Fluid Engineering. Hellan Strainers may be considered pending additional evaluation.

The strainer size recommended for Baker WTP is 250 μm, considering:

- Membrane suppliers under consideration for the Baker WTP have recommended a range between 250 μm to 400 μm.
- Screen sizes less than 250 μm would require additional straining units
- Screen sizes less than 250 μm would generate higher volumes of waste washwater

A wedge wire type strainer is recommended over mesh strainers on the basis of:

- Greater mechanical strength.
- Lower headloss.
- Reduced potential for clogging by algae.

11.3 IN-LINE COAGULATION

A coagulant feed point upstream of the MF system is recommended to meet the following objectives:

- Reduce the rate of membrane fouling.
- Reduce the formation of disinfection by products.

Addition of coagulant to the feed water will reduce or, at some feed water doses, eliminate the need for a secondary feed at the waste washwater treatment clarifier. Lower membrane fouling rates also reduce cleaning frequency and associated downtime and chemical costs. Note that a separate coagulant feed point will be used for removal of suspended solids from the membrane filtration system backwash stream prior to recycling, as discussed in Section 14.

11.3.1 Coagulation Selection

There are several commonly used inorganic coagulants that could be considered for settling clarified solids and minimizing TTHM formation. However, not all of the commonly used coagulants are suitable for in line addition to membrane feed water. Candidate inorganic coagulants are listed below in order of preference for in-line coagulation applications:

- Polyaluminum chlorides (PACl)/aluminum chlorohydrates (ACH) are generally preferred from a membrane process perspective. They require the least amount of time to form filterable floc and reaction times are relatively unaffected by water temperature.
- Ferric chloride has been used successfully in in-line coagulation membrane applications. At the Hemet WFP the addition of low coagulant doses (2 mg/L - 5 mg/L) reduced the cleaning frequency from monthly to quarterly.

- Iron and aluminum sulfates (alum) have been shown to increase the rate of MF fouling in some applications and are generally not preferred by the MF system suppliers.

IRWD's membrane pilot study (MPI, 2008) demonstrated that the addition of ferric chloride to the membrane feed water resulted in lower rates of transmembrane pressure rise (fouling) compared to periods without coagulant addition.

Disinfection By-Product (DBP) Control

Coagulant selection will also consider effectiveness to reduce the formation of total trihalomethanes (TTHM).. Jar testing on coagulated ILW and SPW is recommended to generate data to assist in coagulant selection to meet applicable TTHM standards.

Testing will simulate coagulation, filtration, and chlorine disinfection processes at the Baker WTP, focusing on coagulants preferred for in-line coagulation/MF (ferric chloride and polyaluminum coagulants). Coagulant selection and dose will be based on a maximum TTHM concentration of 64 μg/L after free chlorine disinfection (80% of the limit of 80 μg/L), to account for additional TTHM formation of 10% to 15% in the distribution system following chloramination.

11.3.2 Flash Mixing

High intensity mixing is required for effective coagulation. Pump diffusion flash mix (see schematic on Exhibit 11.1) is recommended for the following reasons:

- Works at both high and low flow rate (high turndown) compared to static mixers.
- High (and adjustable) mixing energy delivered.
- Can be accomplished between the forebay and the membrane system without breaking head.

Exhibit 11.1 Flash Mix Schematic

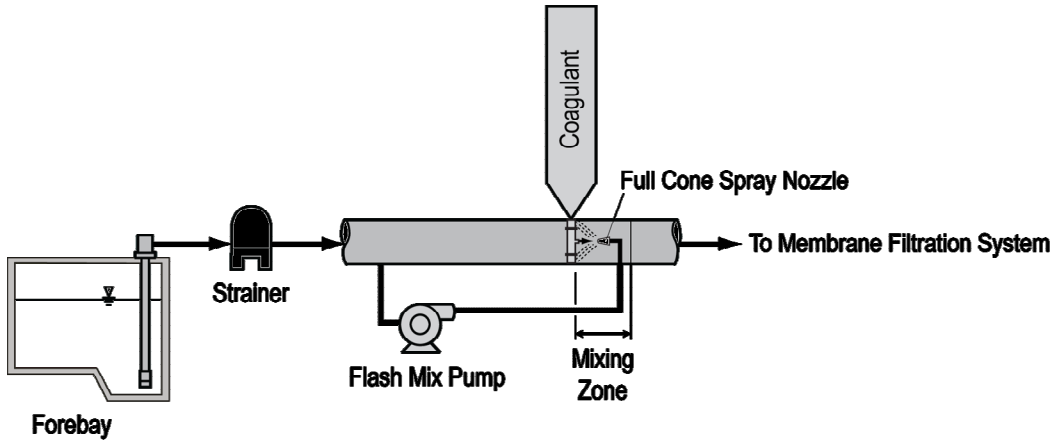

11.4 DESIGN CRITERIA

11.4.1 Feedwater Strainer

Preliminary design criteria and equipment characteristics for three strainer manufacturers is provided in Table 11.1.

Table 11.1 Strainer Design Criteria

Manufacturer	Amiad	Boll	Fluid Engineering
Screen Size	250 µm	250 µm	250 µm
Proposed Configuration	3 x 50%	3 x 50%	3 x 50%
Screen Type	Wedge Wire	Wedge Wire	Wedge Wire
No. of Straining Elements	1	52	1
Strainer Body Diameter (in)	67	53	56
Inlet/Outlet Size (in)	24	24	24
Filtration while Backwashing?	Y	Y	Y
Backwash Mechanism	Brush/Radial Liquid Backwash	Radial and axial flow liquid backwash	Radial liquid backwash through suction scanner
Backwash Pressure Source	System pressure	System pressure	System pressure
Backwash Rate (gpm)	310	538	400-500
Backwash Volume (gallons)	155	225	1000
Backwash Duration (seconds)	30	25	120
Percent of Raw Water Wasted (Typical)	0.05	0.03	0.07
Strainer pad footprint (ft^2)	625	540	540

Note:
1. Includes costs for strainer supplier scope of supply only (strainer bodies, elements, and controls).

11.4.2 Flash Mix System

The key components of the pumped diffusion flash mix system are the booster pump and titanium mixing nozzle (required for corrosion characteristics). Table 11.2 summarizes the design criteria for the pumped diffusion flash mix systems in the feed water and waste washwater treatment systems.

Table 11.2 Flash Mix Design Criteria

Description	Units	MF Feed Water Criteria	BWWT Criteria
Flash Mix Type: Pumped Diffusion Flash Mix			
Pump type: End Suction Centrifugal			
No. of Pump	NO	1	1
Pump Motor	HP	15	5
Mixing Intensity (G)	S^{-1}	750	750
Mixing Energy (GxT)	-	1600	1600
Notes: 1. A standby perforated pipe diffuser will be provided at each coagulant injection point for redundancy.			

(This Page Intentionally Left Blank)

SECTION 12 TREATMENT PROCESS

12.1 OVERVIEW

Treatment process selection for the Baker WTP Project is documented in the report entitled "Design Concept and Cost Update" (RBF and Carollo Engineers, November 2008), Appendix G includes schematics of the process alternatives considered. Exhibit 12.1 shows the comparison matrix. This section covers:

- a summary of the findings of the process selection study.
- additional information documenting refinements made to the process recommendation since that report was issued.

12.2 TREATMENT PROCESS ALTERNATIVES

As part of the preliminary design effort for the Baker WTP Project, Irvine Ranch Water District, Carollo Engineers, and RBF Consulting reviewed potential treatment process alternatives. A process selection matrix, provided as Exhibit 12.1, was developed by Carollo Engineers to compare seven possible alternatives. From the seven process alternatives, the focus was narrowed to one process (Baseline) for comparison to previous studies, and two primary alternatives as follows.

- Baseline - preoxidation with chlorine dioxide, pressurized membrane filtration, UV disinfection, virus inactivation with free chlorine and residual disinfection with chloramines.
- Alternative 1A - preoxidation with chlorine dioxide, pressurized membrane filtration, UV disinfection, granular activated carbon, virus inactivation with free chlorine and residual disinfection with chloramines.
- Alternative 1B - preoxidation with chlorine dioxide, powdered activated carbon, submerged membrane filtration, UV disinfection, virus inactivation with free chlorine and residual disinfection with chloramines.

12.3 PROCESS SELECTION

Selection of the treatment process for the Baker WTP Project was based on many factors, including raw water quality, drinking water quality regulations (current and future), ease of operation, and life-cycle cost. Considerable focus was placed on ensuring that overall project costs, variable raw water quality, taste and odor flexibility, ease and cost of operation and maintenance, and plant foot

print size were all acceptable. With all alternatives and factors presented and considered, IRWD and the Project Stakeholders confirmed the selection of the Baseline alternative (pressurized membrane filtration) for the Baker WTP Project.

12.4 PROCESS REFINEMENTS

12.4.1 Forebay

Two alternatives for providing feed pressure were presented for final selection of the pressurized membrane process configuration:

- Use of pressure in Baker Pipeline from MWD and Raw Water Pump Station for driving membrane filtration
- Break head at the Baker WTP and construct a forebay and Feed Water Pump Station

A forebay was selected for the following reasons:

- Chlorine Dioxide Contact Time: Potential remote locations for the chlorine dioxide system were determined to be undesirable, and the chlorine dioxide contact time requirement could therefore not be met in the pipeline. The forebay includes a dedicated contact time compartment to allow for oxidation of manganese when Irvine Lake is the water source.
- Hydraulic control for membrane system operation: Direct use of pressure in the Baker Pipeline would require active flow control on raw water from both MWD and the Raw Water Pump Station. The alternative was to design the membrane system to accept constant flow from the Baker Pipeline by adding additional membrane racks. Additional membrane racks would have increased the equipment and treatment building costs (see Section 23).

12.4.2 Taste and Odor Control

Granular activated carbon contactors have been removed from the project due to cost constraints. The site has been planned to allow for addition of GAC at a later date should GAC be determined to be necessary. There is space on the site for addition of powdered activated carbon at later date as a lower cost alternative for taste and odor control. See Exhibit 17.1 for the areas reserved at the Baker WTP site in case GAC and PAC systems are added in the future.

Exhibit 12.1 – Treatment Process Comparison Matrix

	Baseline ClO_2-PMF-UV-Cl_2	**Alt 1A** ClO_2-PMF-GAC-UV-Cl_2	**Alt 1B** ClO_2-SMF-PAC-UV-Cl_2	**Alt 2** O_3-BAF-SMF	**Alt 3** O_3-SED-GMF	**Alt 4** ClO_2-SED-GAC-UV-Cl_2
Layout Flexibility (Land Development)	1	2	2	3	4	4
Consistency with Diemer Aesthetics	4	2	3	1	1	2
Operational Effectiveness						
Filtration	1	1	1	1	2	2
T&O Events	4	2	2	1	1	2
DBPs	1	1	1	2	2	1
Capacity	1	1	2	1	1	1
Total	**12**	**9**	**11**	**9**	**11**	**12**

LEGEND:

1. Good *2: Moderate* *3: Poor* *4: Not Addressed*

12.5 PROCESS FLOW DIAGRAM

The Process Flow Diagram (PFD) developed for the project is presented as Exhibit 12.2 (also **Drawing G7** of the Preliminary Submittal). The PFD depicts major treatment processes, pump stations, chemical feed points, piping, control loops, ancillary equipment, and instrumentation.

12.5.1 Primary Treatment Process Flow

Key elements of the primary treatment process and their roles in meeting treatment objectives are summarized in Table 12.1 below.

Table 12.1 Key Processes and Their Roles in Meeting Treatment Objectives

Treatment Objective	Treatment Goal	Associated Processes and Structures
Manganese Removal[1]	<0.02 mg/L	Chlorine Dioxide/Membrane filtration
DBP Control[2]	<64 μg/L TTHM[3] <48 μg/L HAA5[3]	Coagulation/Flash Mix (Main Process) Chloramine as residual disinfectant through ammonia addition at CT Basin
Turbidity Removal	<0.1 NTU 95% of the time	Membrane Filtration Forebay
Disinfection - Cryptosporidium	4-log removal/inactivation[4]	Membrane Filtration
Disinfection - Giardia	4.5-log removal/inactivation[4]	Membrane Filtration – 4 log UV Disinfection – 0.5 log
Disinfection - Virus	4.0-log removal/inactivation[4]	Free chlorine addition at CT Bain
Corrosion Control	Non-corrosive finished water	Caustic soda feed at CT basin.

Notes:
1. Manganese removal required only when Irvine Lake used at supply for Baker WTP. SMCL for manganese is 0.05 mg/L. Lower goal established to minimize membrane fouling from manganese, and to prevent aesthetic issues in the distribution system.
2. DBP control strategy is to minimize free chlorine contact time in CT Basin. Coagulant addition removes Membranes and UV to provide Giardia disinfection upstream of the CT Basin. This reduces treatment requirement in CT Basin to virus only. Residual disinfection with chloramines minimized additional DBP formation in the distribution system.
3. DBP goals set to 80% of MCL to allow for additional formation of 10% to 15% in the distribution system.
4. Section 15 provides a discussion of disinfection goals established for the project.

12.5.2 Waste Washwater Recovery

The individual membrane racks that make up the membrane system (up to 14) backwash in discrete events. The backwash water or membrane filtration waste washwater (MFWW) is equalized in the MFWW equalization basin and pumped at a constant rate to the clarification process to avoid overloads and upsets.

The clarification process selected for the Baker WTP is lamella plate setters. This process can be hydraulically loaded 3 to 4 times higher than a conventional clarification process. As a result, the MFWW clarifiers can be sized for common wall construction with the forebay, reducing construction costs. Other high rate clarification processes are available, however they rely on polymer addition and may result in irreversible membrane fouling.

12.6 TREATMENT PROCESS

Pressurized membrane filtration (PMF) is the core filtration and disinfection process selected for the Baker WTP. Membrane filtration is a physical particle removal and disinfection process. Several manufacturers can supply systems approved by the California Department of Public Health for removal of turbidity, Giardia, cryptosporidium, and viruses.

12.6.1 Description

PMF will be used in the Baker WTP to meet treatment requirements for turbidity removal and to partially satisfy disinfection requirement. Complimentary processes will be utilized to meet additional treatment requirements. Membrane system design characteristics are discussed below.

- Membrane systems under consideration are PVdF (Polyvinylidene fluoride) hollow fiber based systems, filtering water from outside to inside. Individual modules with capacities of 15 to 20 gpm are assembled on individual racks with common piping with capacities of 2 mgd to 3 mgd. A maximum of 14 racks is specified in the procurement documents, including one fully redundant rack not required to meet nominal 28 mgd capacity.

- Automation – Membrane systems are highly automated and sophisticated processes that require PLC based controllers.

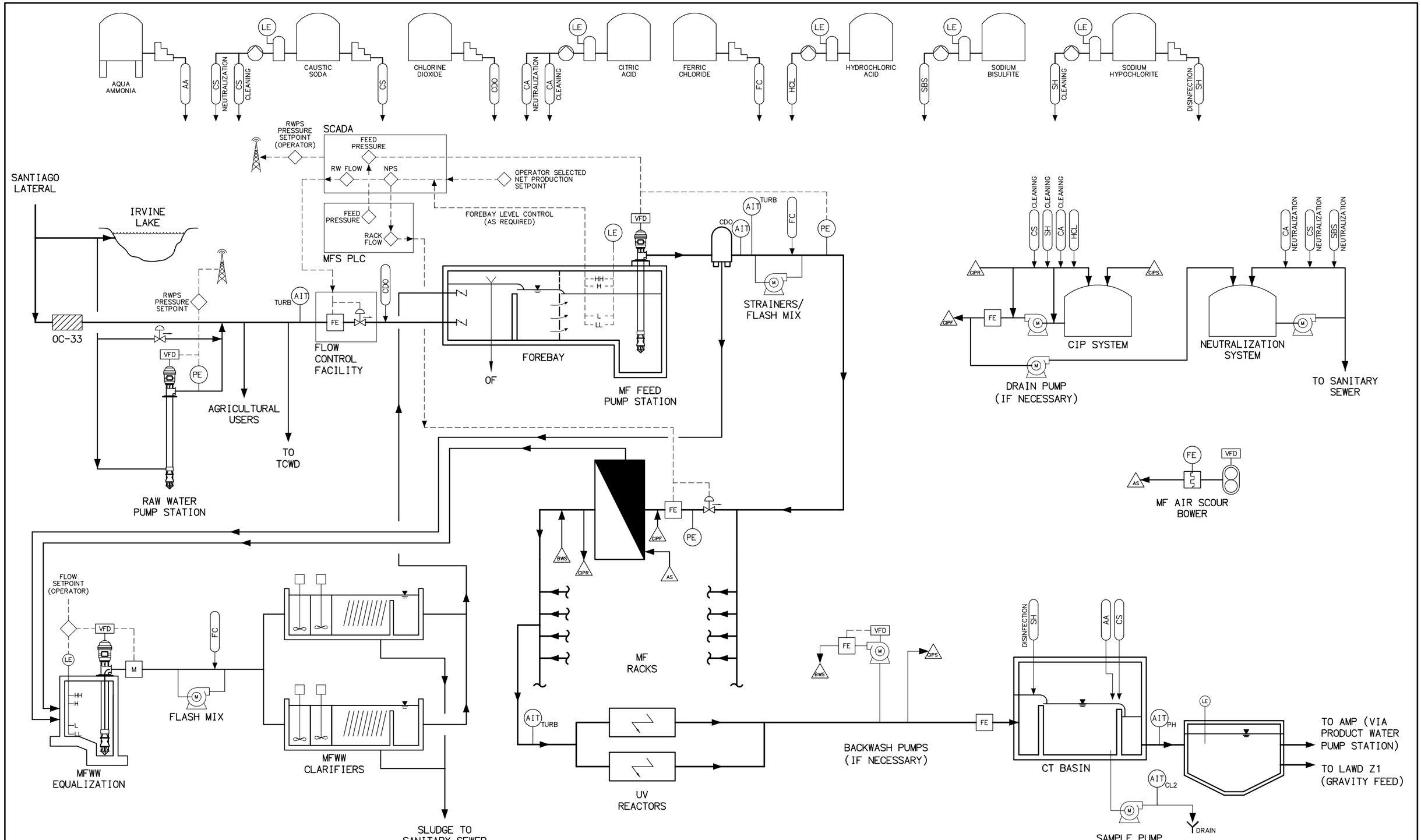

RBF CONSULTING

carollo

IRVINE RANCH WATER DISTRICT

BAKER WATER TREATMENT PLANT

PROCESS FLOW DIAGRAM

EXHIBIT

12.2

- Feed water pumping – Only pressure driven membrane systems are under consideration for this project. Feed pressure at the membrane racks will vary by supplier. Anticipated maximum feed pressures are in the range of 25 psi to 40 psi.

- Membrane System Capacity: The membrane filtration system will be designed to net 28 mgd. Additional water will be produced by the system for cleaning sequences (chemical cleaning and backwash). Feed water recovery has been specified in the procurement documents to be a minimum of 92%.

- Residuals Handling: With the exception of chemical cleaning residuals, washwater will be equalized, clarified and recycled to the forebay for reuse. Neutralized cleaning solutions will be discharged to the sewer. See Section 14.

- Cleaning Operations: Three primary cleaning operations are used in membrane filtration systems used to maintain capacity and minimize transmembrane pressure and energy use:

  - Backwash – In this process, a dedicated pump station pumps filtered water from the inside-out removing particles accumulated on the membrane surface. Backwash sequences also use air delivered concurrently with water through a compressed air (compressors or blowers, depending on the manufacturer). Backwashes occur every 15 to 30 minutes on each rack. Backwashes are initiated and function fully automatically, though additional backwashes can be manually initiated.

  - Chemically Enhanced Backwash (CEB) – CEB use commodity cleaning chemicals (sodium hypochlorite, caustic soda and citric acid and/or mineral acids) to remove materials from the membrane surface not removed by backwashing. Inorganic scale, coagulants, biological growth, and organic materials sorbed to the membrane surface are typically responsible for membrane fouling and are targeted by these chemicals. The CEB system uses chemical cleaning equipment consisting of pumps, tanks, recirculation loops and water heaters. CEB may occur up to once per day per rack, and take approximately one hour to complete.

CEB are fully automated and are typically initiated automatically though they can be manually initiated.

- Clean in Place (CIP) – This process uses the same subsystems as CEB, but uses higher doses of cleaning solutions with longer soak durations (up to 7 hours per rack). CIPs have been specified to occur no longer than once per month per rack. CIPs are manually initiated. Most sequences occur automatically, but operator input is required at steps required verification of chemical doses.

- Integrity Testing: The membrane systems have been specified to include two mean of integrity checks, direct (pressure decay testing) and indirect (turbidity monitoring).

  - Pressure decay testing (PDT) – In this test pressurized air is introduced into the membrane modules and displaces water. The rate of pressure loss is indicative of integrity breaches (fiber or module damage), and is used to calculate a log removal value (disinfection performance). PDT occurs automatically once per day are required by federal regulation. Failed tests will shut a rack down for retesting and/or membrane repair.

  - Indirect integrity testing – Laser turbidimeters have been specified for monitoring turbidity on each rack as an indicator of membrane integrity. Increases in turbidity may signal fiber damage and raw water bypass through the membrane fibers. Sustained turbidities over 0.1 NTU will cause a rack to shut down.

- Cleaning Solution Neutralization – Spent cleaning solutions will be neutralized and discharged to the sanitary sewer. Chlorinated solutions will be neutralized with sodium bisulfite and caustic soda, acidic cleaning solutions with caustic soda. Criteria for discharge is a chlorine residual of less than 1 mg/L of free chlorine, and pH between 6.5 and 8.5.

- Ancillary Equipment – Membrane systems utilize ancillary equipment to support cleaning procedures. Major ancillary equipment includes CIP, neutralization, and backwash pumps, air compressors (for valve operation and integrity testing), and backwash air blowers.

12.6.2 Manufacturers

Two manufacturers are listed in the procurement specification based on the District's previous pilot testing effort on Irvine Lake Water and State Project Water.

- Pall Microza - Module designation USV 6203 (MF)
- Siemens CP – Module designation L20V (UF)

Practical differentiation between MF and UF membranes in drinking water applications is ability of UF to remove virus to a greater degree than MF membranes. CDPH approved third-party testing of these two systems resulted in approval for Siemens for 1.5 log virus removal credits versus Pall's approval for 0.5 log virus removal credits. However, no distinction is made in the plant disinfection strategy between the two system for two reasons;

- Integrity testing procedures are not capable of verification of virus rejection due to high-pressure requirements for such testing.
- The minimal cost difference for disinfectant contact time required to meet overall virus disinfection goal of 4-log.

12.6.3 Procurement

Procurement will be completed through a competitive evaluated bid. The basis is present worth of chemical, energy, and membrane replacement costs plus bid price. Key elements of the membrane suppliers' scope of supply include:

- Membrane modules and racks
- Membrane system controls, PLC, programming, and instrumentation
- Chemical cleaning, neutralization, and backwash pumps
- Chemical cleaning and neutralization tanks
- Integrity monitoring systems
- Blowers and compressors
- Installation, start up, and testing services.

- 48 month 100% module replacement warranty plus a minimum of 6 additional years pro-rated module replacement warranty.
- 48-month labor and equipment fiber repair services
- 24 month process warranty and equipment

Key membrane system related equipment not provided by the membrane suppliers:

- Feed water pumps
- Feed water strainers
- Installation of racks and modules
- Interconnecting piping
- Cleaning chemical storage and feed systems
- Anchor bolts

12.7 MEMBRANE FILTRATION SYSTEM DESIGN CRITERIA

Design criteria for the membrane filtration system are provided in Table 12.2.

Table 12.2 Membrane Filtration System Design Criteria

Pressurized Membrane System		
Type: Polymeric Hollow Fiber Microfiltration Or Ultrafiltration		
Number Of Membrane Racks (Max)	NO.	14
Number Of Redundant Membrane Racks	NO.	1
Minimum Recovery	PERCENT	92
Backwash Interval (Min) Per Rack	MINUTES	TBD
Backwash Supply Flow Rate (Water)	GPM	TBD
Backwash Supply Flow Rate (Air)	SCFM	TBD
Chemical Backwash Interval (Min) Per Rack	DAYS	1
Clean-In-Place Interval (Min) Per Rack	DAYS	30

12.8 TREATMENT BUILDING

The Treatment Building will house the membrane filtration system (racks, cleaning, backwash and air subsystems, as well as dedicated membrane system controls) and the UV system. The building has been sized to allow space for the treatment building electrical equipment, control room, laboratory (wet room), and HVAC equipment.

The south end of the building will be located six feet below the membrane rack and control room level. This allows the CT basin inlet weir to be used as a means of keeping the UV reactors fully submerged (below the hydraulic grade line), and provides secondary containment for chemical cleaning and neutralization tanks.

Primary process lines (membrane feed and filtrate) will be located in the center of the building, located in a trench or concrete encased beneath the floor slab. All valves and instrumentation associated with these lines will be kept above grade for ease of access and maintenance.

A plan view of the treatment building is provided in Exhibit 12.3 (Drawing R1). In addition, renderings of the treatment building are provided as Drawings R2 to R9.

(This Page Intentionally Left Blank)

SECTION 13 Chemical Storage and Feed Systems

13.1 OVERVIEW

The Baker WTP will require the use of various chemicals throughout the treatment processes. Some chemicals are necessary for meeting finished water quality goals, while others are utilized as part of the membrane cleaning process. The equipment and procedures for storing and delivering chemicals to treatment processes are described in this section.

Objectives include:

- Size the chemical systems at the Baker WTP.
- Define design criteria for each chemical system.
- Define the major components of each chemical system-Prepare schematics.
- Establish preliminary layout for the Chemical Building.
- Estimate requirements for chemical deliveries.

13.2 CHEMICAL REQUIREMENTS

There are nine chemicals planned for use at the Baker WTP:

Chlorine Dioxide – Used for oxidation of iron and manganese in raw water from Irvine Lake.

Primary Coagulant – Used to inhibit membrane fouling. Used to assist with disinfection by product (DBP) control.

Sodium Hypochlorite – Used for virus disinfection, membrane cleaning and on site generation of chlorine dioxide.

Aqua Ammonia – Will be combined with free chlorine to form chloramines, the residual disinfectant in the distribution system.

Sodium Hydroxide – Used for pH adjustment of finished water, membrane cleaning and neutralization of membrane cleaning wastewater.

Citric Acid – Used for membrane cleaning.

Hydrochloric Acid – Used for pH adjustment of membrane cleaning solution, neutralization of membrane cleaning wastewater and on site generation of chlorine dioxide

Sodium Bisulfite – Used for dechlorination of membrane cleaning wastewater.

Sodium Chlorite – Used for on site generation of chlorine dioxide.

13.3 CHEMICAL SYSTEM DESIGN CRITERIA

13.3.1 Chemical System Sizing Criteria

Each of the chemical systems is sized based on the following criteria

- Each chemical storage system shall be designed for a minimum of one full truck load of the chemical with 50% of that required volume in reserve.
- Chemical storage system shall have a minimum of two tanks for chemicals with continuous usage to allow for one tank to be taken off-line for maintenance and cleaning without affecting plant operations.
- One tank is acceptable for chemicals with intermittent usage.
- Each chemical storage system shall be designed for a minimum of 15 days of storage under average chemical dose applied to the full plant design capacity of 28 MGD.
- When optional chemicals are available such as for primary coagulant, the most corrosive alternate is assumed for material selection.
- For each chemical metering system, the type of metering pump is based on the following criteria:
    - Pump shall be suited for the chemical application intended.
    - For each established flow and discharge pressure, pump to be the reasonably largest one so it could be easily retrofited with another type in the future

  Based on these criteria, the design is developed around Milton Roy double diaphragm hydraulically actuated Milroyal G. Pulseafeeder will be listed as an alternative supplier.
- For each chemical transfer application an air-operated double-diaphragm air pump is specified. Supplier is Wilden or equal.
- Each chemical is conveyed neat – not diluted - to the point of use.
- Should dilution water be required to design and operate the diffuser, dilution water will be conveyed to the point of use.
- Softened water will be used as dilution water for sodium hypochlorite, aqua ammonia, and sodium hydroxide.
- A screw type air compressor system is provided to feed the air-operated pumps and the air-actuated valves.

13.3.2 Piping and Tank Materials

Table 13.1 lists the pipe and storage tank materials recommended for each chemical. Material selection for the chemical tanks and chemical piping is based on a meeting held with IRWD on May 20, 2009 as well as

Table 13.1 Pipe and Storage Tank Materials Summary

	In Containment Area (Chemical Building)						Outside Containment Area			
Chemical	**Tank Material**	**Tank Vent Material (5)**	**Tank OF Material**	**Tubing Material**	**Fittings Material**	**Valve Material Type**	Tubing Material	Carrier Pipe Material	Valve Material	Comment
Bulk Chemical										
Sodium Hypochlorite 12.5%	FRP	PVC SCH80	PVC SCH80	PVC SCH80	PVC SCH80	PVC 3-Piece True Union Ball Valve (1)	Teflon	PVC SCH80	PVC ChemFlare End (1)	
Aqua Ammonia 29%	Lined Steel	PVC SCH80	PVC SCH80	316	316 Swagelock-type	SS 3-Piece 60 Series Ball Valve	Teflon	PVC SCH80	PVC ChemFlare End	Pressurized tank (top and bottom dome + legs)
Caustic Soda 25%	Steel (2)	PVC SCH80	PVC SCH80	Black steel (3)	Black steel	Carbon Steel Flanged Lubricated Plug Valve	Teflon	PVC SCH80	PVC ChemFlare End	Flat bottom
Ferric Chloride 39%	FRP	PVC SCH80	PVC SCH80	PVC SCH80	PVC SCH80	PVC 3-Piece True Union Ball Valve	Teflon	PVC SCH80	PVC ChemFlare End	
Citric Acid 50%	FRP	PVC SCH80	PVC SCH80	316	316 Swagelock-type	SS 3-Piece 60 Series Ball Valve	Teflon	PVC SCH80	PVC ChemFlare End	
Sodium Bisulfite 38%	FRP	PVC SCH80	PVC SCH80	PVC SCH80	PVC SCH80	PVC 3-Piece True Union Ball Valve	Teflon	PVC SCH80	PVC ChemFlare End	
Chlorine Dioxide On Site Generation										
ClO2 Solution (2,500 mg/L) Batch Tank	FRP	PVC SCH80	PVC SCH80	PVC SCH80	PVC SCH80	PVC 3-Piece True Union Ball Valve	Teflon	PVC SCH80	PVC ChemFlare End	Black FRP tank
Sodium Chlorite 25% - 31%	FRP	PVC SCH80	PVC SCH80	PVC SCH80	PVC SCH80	PVC 3-Piece True Union Ball Valve	Teflon	PVC SCH80	PVC ChemFlare End	
Hydrochloric Acid 15%	FRP (Epoxy Vinyl Ester Only) (4)	PVC SCH80	PVC SCH80	PVC SCH80	PVC SCH80	PVC 3-Piece True Union Ball Valve	Teflon	PVC SCH80	PVC ChemFlare End	

NOTES
(1)Sodium Hypochlorite Application: Vented ball to relieve pressure build-up inside valve
(2) Caustic Soda Application: Unlined steel tank is appropriate. However, rust will be visible inside the tank
(3) Caustic Soda Application: No trace heat tracing because of use of 25% Caustic soda and indoor installation
(4) Hydrochloric Acid Application: Vinyl ester lined steel tank would be a good alternative. However, nozzles below 4" would be in titanium
(5) Material to transition to CPVC SCH80 before penetrating through the roof

(This Page Intentionally Left Blank)

coordination with design-build team for the Wells 21/22 Project.

13.4 DESIGN CRITERIA BY CHEMICAL

13.4.1 Primary Coagulant

The primary coagulant will be added at the primary process flash mix system and/or at the secondary flash mix system prior to the MF waste water clarifiers. Table 13.2 summarizes the design criteria for the primary coagulant system.

Table 13.2 Primary Coagulant Design Criteria

Description	Units	Criteria
Type: Ferric Chloride, 39% Solution (4.6 lb/gal)		
Feed Points: Flash Mix, Membrane Backwash		
Dosage:		
Flash Mix (equivalent raw water; Min-Ave-Max)	mg/L	2-10-20
Metering Pumps		
Type: Double diaphragm hydraulically actuated with gauge leak detection		
Number		
Duty	No.	2
Standby	No.	1
Design Capacity (Each)	gph	45
Model	Milton Roy	Milroyal G
Storage Tanks		
Type: Vertical FRP		
Number	No.	2
Volume		
Each	Gal.	8,000
Total	Gal.	16,000
Days of Storage (Average Dosage)	Days	29
Delivery Interval (Average Dose)	Days	7

Notes
1. Chemical system can accommodate ferric chloride, ferric sulfate, alum, and polyaluminum chloride
2. Dosage is based on doses actually used at the Serrano Water District WTP, the Eastern Municipal Water District Hemet Water Filtration Plant, and jar testing data for particulate removal at the Palmdale Water District WTP

13.4.2 Sodium Hydroxide

Sodium hydroxide (or caustic soda) is used to raise the pH of the solution or process flow that it is added to. At the Baker WTP, sodium hydroxide will be added to the effluent of the CT basin in order to raise the pH to an appropriate level prior to the water being sent to the distribution system. It will also be added to the membrane cleaning solution used to clean the membranes on a monthly basis and to the cleaning waste water after membrane cleaning has taken place in order to adjust the pH prior to disposal to the sanitary sewer. Table 13.3 summarizes the design criteria for the sodium hydroxide system.

Table 13.3 Sodium Hydroxide Design Criteria

Description	Units	Criteria
Type: Liquid, 25% solution (2.67 lb/gal as 25%)		
Feed Points: CT Basin Effluent, CIP Tank, CIP Neutralization Tank		
Dosage at CT Basin (Min-Ave-Max):	mg/L	1-4-7
Dosage at CIP & Neutralization Tanks	mg/L	10,000 & 16,400
Metering Pumps		
Type: Double diaphragm hydraulically actuated with gauge leak detection		
Number (CT Basin)		
Duty	No.	1
Standby	No.	1
Design Capacity (Each)	gph	30
Model	Milton Roy	Milroyal G
Transfer Pumps		
Type: Air-operated double diaphragm		
Number (CIP Tank, CIP Neutralization. Tank)		
Duty	No.	1
Standby	No.	1
Capacity (Each)	gpm	TBD
Model	Wilden	TBD
Storage Tanks		
Type: Vertical Welded, Bare Steel		
Number	No.	2
Volume		

Description	Units	Criteria
Each	Gal.	8,500
Total	Gal.	17,000
Days of Storage (Average Dosage)	Days	25
Delivery Interval (Average Dose)	Days	7

Sodium hydroxide is typically used in concentrations of 25% and 50% by weight. The 25% solution is typically used during the winter to avoid crystallization of the chemical during the colder months, while the 50% solution is typically used during the summer since it is less expensive per equivalent weight of sodium hydroxide. During the winter months, 25% solution may be purchased direct from the local suppliers or 50% solution may be purchased and diluted onsite. The freezing point for 25% sodium hydroxide is 5 degrees F, while the freezing point for 50% sodium hydroxide is 53 degrees F.

13.4.3 Citric Acid

Citric acid is used during monthly chemical cleaning of the membrane system and will be pumped to the membrane CIP tank at a dosage of 20,000 mg/L. Table 13.4 summarizes the design criteria for the citric acid system.

Table 13.4 Citric Acid Design Criteria

Description	Units	Criteria
Type: Liquid, 50% solution (5.2 lb/gal)		
Feed Points: CIP Tank		
Maximum Dosage:	mg/L	20,000
Transfer Pumps		
Type: Air-operated double diaphragm		
Duty	No.	1
Standby	No.	1
Design Capacity (Each)	gpm	TBD
Model	Wilden	TBD
Storage Tanks		
Type: Vertical FRP		
Number	No.	1

Description	Units	Criteria
Volume	Gal.	6,900
Days of Storage (Average Dose)	Days	46
Delivery Interval (Avearge Dose)	Days	31

13.4.4 Sodium Bisulfite

Sodium bisulfite will be applied to the chemical cleaning solution in the neutralization tank after chemical cleaning of the membrane units has taken place in order to remove chlorine from the sodium hypochlorite CIP solution.Table 13.5 summarizes the design criteria for the sodium bisulfite system.

Table 13.5 Sodium Bisulfite Design Criteria

Description	Units	Criteria
Type: Liquid, 38% solution (4.1 lb/gal)		
Feed Points: Neutralization Tank		
Dosage (CEB – CIP):	mg/L	410-1,030
Transfer Pumps		
Type: Air-operated double diaphragm		
Duty	No.	1
Standby	No.	1
Design Capacity	gpm	TBD
Model	LMI (Milton Roy)	Series B/C
Storage Tanks		
Type: Vertical FRP		
Number	No.	1
Volume	Gal.	6,300
Days of Storage (Average Dose)	Days	102
Delivery Interval (Average Dose)	Days	68

13.4.5 Sodium Hypochlorite

Sodium hypochlorite will be added to the inlet of the CT basin in order to provide the primary virus disinfection for the plant. It will also be added to the membrane CIP tank for chemical cleaning of the membrane units on a monthly basis and on a daily basis through the chemically enhanced backwashes. The chemical cleaning of the membranes is designed for the use of 400 mg/L of sodium hypochlorite for the CEB's and 1,000 mg/L for the monthly CIP's. Sodium hypochlorite will also be used to generate chlorine dioxide.

Table 13.6 summarizes the design criteria for the sodium hypochlorite system based upon the use of bulk sodium hypochlorite delivered at 12.5%. The concentration of sodium hypochlorite degrades over time and a final solution concentration of 10.5% was assumed for application to the processes for storage and feed calculation purposes.

Table 13.6 Sodium Hypochlorite Design Criteria

Description	Units	Criteria
Type: Liquid, 10.5% solution (1.0 lb/gal as hypochlorite or 0.95 lb/gal as chlorine)		
Feed Points: CT Basin Influent, CIP Tank		
Dosage at CT Basin Influent (Min-Ave-Max)	mg/L	2.5-3.0-4.0
Dosage at CIP Tank (CEB-CIP)	mg/L	400-1,000
Demand at Chlorine Dioxide Generator (Min-Ave-Max)	ppd	34-136-191
Metering Pumps		
Type: Double diaphragm hydraulically actuated with gauge leak detection		
Number (CT Basin Inlet)		
Duty	No.	1
Standby	No.	1
Design Capacity (Each)	gph	40
Model	Pulsafeeder	Pulsar Hypo
Transfer Pumps (CIP Tank)		
Number		
Duty	No.	1
Standby	No.	1

Description	Units	Criteria
Capacity	gpm	TBD
Model	Wilden	TBD
Storage Tanks		
Type: Vertical FRP		
Number	No.	2
Volume		
Each	Gal.	8,500
Total	Gal.	17,000
Days of Storage (Average Dosage)	Days	16
Delivery Interval (Average Dose)	Days	5

Two options are available for valves on the sodium hypochlorite storage and feed system, which are ball valves with drilled balls and diaphragm valves. Due to the fact that sodium hypochlorite produces a gas as it degrades over time, pressure can build up in locations where this gas can be trapped such as in the ball of a ball valve. If the ball does not have a way to release the pressure, it can explode and cause injury. Therefore, it is required that all ball valves used for sodium hypochlorite have a hole drilled in one side of the ball. While diaphragm valves do not trap liquid the way ball valves can, they are more expensive and operators at other sites have expressed a preference for ball valves. This preference is based on how quarter turn ball valves can be operated quicker, which is important when performing pump calibrations. Based upon this information, ball valves with drilled balls are the basis for design.

Delivery of 12.5 percent sodium hypochlorite solution is selected for consistency between District's different operations sites.

13.4.6 Aqua Ammonia

Aqua ammonia is added to the finished water to combine with the free chlorine provided by the sodium hypochlorite and form chloramines. Chloramines react minimally with organic carbon in the water and therefore minimize the formation of disinfection by-products. Table 13.8 summarizes the design criteria for the aqua ammonia system.

Table 13.7 Aqua Ammonia Design Criteria

Description	Units	Criteria
Type: Liquid, 29% solution (2.2 lb/gal)		
Feed Points: CT Basin Effluent		
Dosage (Min-Ave-Max)	mg/L	0.6-0.8-1.0
Metering Pumps		
Type: Double diaphragm hydraulically actuated with gauge leak detection		
Number		
Duty	No.	1
Standby	No.	1
Design Capacity (Each)	gph	5
Model	Pulsafeeder	Pulsar Hypo
Storage Tanks		
Type: Vertical, Pressurized, Lined Steel		
Number	No.	2
Volume		
Each	Gal.	5,000
Total	Gal.	10,000
Days of Storage (Average Dosage)	Days	92
Delivery Interval (Average Dose)	Days	59

13.4.7 Chlorine Dioxide

Chlorine dioxide will be added to the raw water received from Irvine Lake, at the plant site, in order to oxidize iron and manganese as described in Section 8. Table 13.9 summarizes the design criteria for the chlorine dioxide generation system. A detailed discussion regarding the different means for on-site generation of chlorine dioxide is provided in Section 8.

Table 13.8 Chlorine Dioxide Design Criteria

Description		Units	Criteria
Type: On-site Generation, Three-chemicals, Batch Tank			
Feed Point: At Baker WTP, upstream of forebay			
Dosage (Min-Ave-Max)		mg/L	0.5-1.0-1.4
Metering Pumps			
Type: Double diaphragm hydraulically actuated with gauge leak detection			
Number			
	Duty	No.	1
	Standby	No.	1
	Design Capacity (Each)	gph	660
	Model	Milton Roy	Milroyal C
Sodium Chlorite			
Type: Liquid, 25% solution, 2.6 Lbs/gal			
	Demand at ClO2 Generator (Min-Ave-Max)	ppd	83-331-463
	Storage Tank		
	Type: Vertical FRP		
	Number	No.	1
	Volume	Gal.	6,900
	Days of Storage (Average Dose)	Days	53
	Delivery Interval (Average Dose)	Days	36
Hydrochloric Acid			
Type: Liquid, 15% solution, 1.3 Lbs/gal			
	Demand at ClO2 Generator (Min-Ave-Max)	ppd	33-133-187
	Storage Tank		
	Type: Vertical FRP		
	Number	No.	1
	Volume	Gal.	8,000
	Days of Storage (Average Dose)	Days	80
	Delivery Interval (Average Dose)	Days	53
Sodium Hypochlorite	Gravity Fed. Type, Number, Volume. Refer to Table 13.6		

Supplemental calculations for the chemical storage and feed systems are provided in Appendix H

13.5 CHEMICAL STORAGE BUILDING

A preliminary layout for the chemical facility is provided in Exhibit 13.1 (Drawing M2). Highlights of the layout include the following:

- The chemical building is air-conditioned. The air handling unit is located in the HVAC room.
- The chemical building is equipped with a fire detection system and a fire protection system.
- Each chemical is stored in its dedicated containment area. Aqua ammonia is stored in a separate room. Chlorine dioxide is also stored in a separate room.
- Each containment area:
    - is constructed with above grade containment walls. Based on available space, access to the containment area will be through stairs or ladders.
    - has a volume based on the volume of the larger tank, plus 10 minutes of sprinkler system operation, plus freeboard.
    - is equipped with its own chemical delivery lock box to be designed per the requirements of the Orange County Fire Department.
    - includes a sump. Hydraulic connections and electrical connection are provided at each sump for installation of a temporary sump pump.
- Chemical storage tanks are installed on elevated concrete pads to ensure that metering and transfer pumps are provided with a flooded suction
- Metering pumps are accessible from outside of the containment area. Instrumentation displays can be read from outside of the containment area.
- The chemical building includes a storage room for storage of spare parts. The softening equipment is located in this room. The air compressor system is also located in the storage room.

This page left intentionally blank

SECTION 14 BACKWASH WASTE WATER SYSTEM

14.1 OVERVIEW

The total or combined waste washwater (CWW) flow for the Baker WTP will be comprised of:

- Membrane feed water strainers waste washwater (SWW).
- Membrane filtration system waste washwater (MFWW), excluding chemical cleaning solutions.

Estimated range of CWW flows at the Baker WTP are 0.5 mgd to 3.0 mgd (primarily dependent on membrane system selection and performance). In most cases, this waste washwater is amenable to treatment and recycling back to the head of the plant. Treatment and recycling facilities minimize plant waste discharges and maximize plant feed water recovery.

14.1.1 Water Quality

Sources of waste washwater from the Baker WTP are depicted in Exhibit 14.1. A summary of CWW quantity and quality is presented in Table 14.1.

Exhibit 14.1 Sources of Waste Washwater

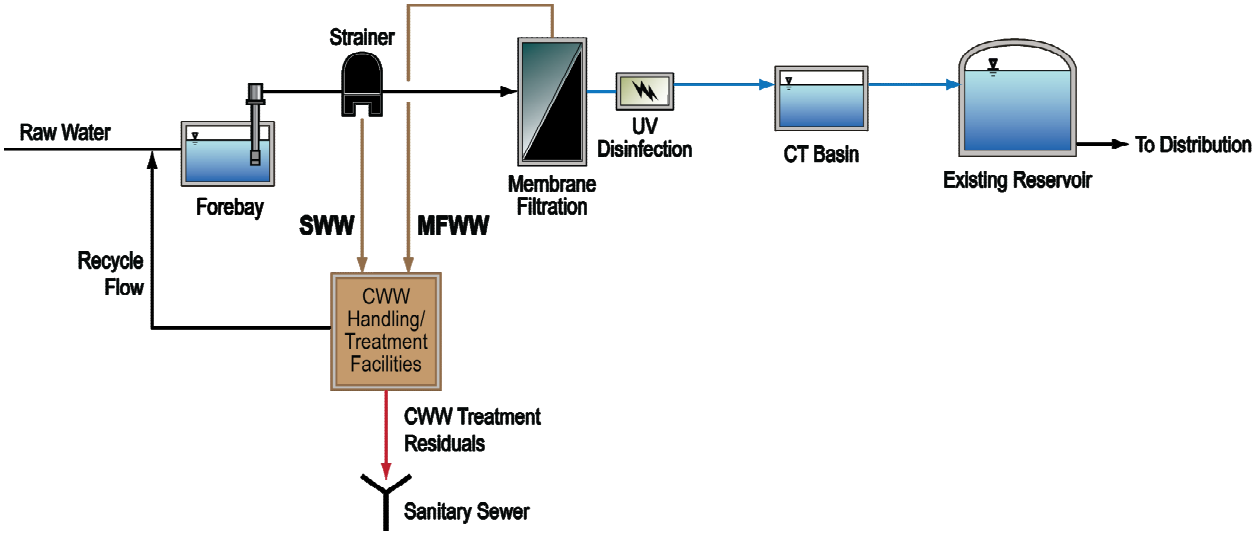

Table 14.1 Summary of Combined Waste Washwater Characteristics

	Units	CWW Flow Condition		
		Average	Minimum	Maximum
Assumed Operation and Raw Water Quality Data				
MF System Recovery	%	92	98	90
Raw Water Coagulant Dose[1]	mg/L	10	10	10
Raw Water Turbidity[2]	NTU	6	6	6
Raw Water Total Manganese[3]	mg/L	0.075	0.075	0.075
Estimated CWW Quantity and Quality				
Daily CWW Generation[4]	Million Gallons	2.2	0.5	3.0
CWW Turbidity	NTU	74	288	58
CWW TSS[1,3]	mg/L	194	751	151
CWW Total Manganese[3,6]	mg/L	1.7	7.4	1.4

Notes
1. Ferric sulfate is the assumed coagulant. A TSS to dose ratio of 0.79 is assumed.
2. Average Irvine Lake Water assumed for calculations in this table.
3. Manganese concentrations based on data presented in Malcolm Pirnie, 2008.
4. Based on total membrane system feed flow (raw water and recycle flows) at indicated recovery. Includes SWW flows.
5. A ratio of 1:1.3 (NTU:TSS) has been assumed for TSS calculations.
6. Assumes 50% removal in washwater treatment process, 80% removal in the primary MF process, and raw water manganese concentration of 0.075mg/L.

14.1.2 Treatment Alternatives

The following treatment alternatives screening is based on meeting key treatment goals for the CWW stream.

- Turbidity – An operational goal for turbidity in the recycle stream of less than 2 NTU, but no greater than average feed water turbidity.

Treatment processes used for treating combined washwater (CWW) flows at membrane facilities have a common treatment objective of liquid/solid clarification. These processes are varied in their suitability for specific applications. For the purpose of preliminary screening, candidate liquid/solid clarification processes used for treating CWW are grouped into broad categories in Table 14.2.

Appendix I includes supplemental calculations in support of the backwash wastewater treatment system preliminary design.

Table 14.2 Preliminary Screening of CWW Treatment Alternatives

	Fatal Flaw(s)	Other Considerations
Clarification		
Plate settlers	None	Proven solids removal technology
Lagoons	Required footprint; visual impact to planned future development	Eliminated
Actiflo®	Polymer carry over could permanently foul membranes	Eliminated
Dissolved Air Floatation (DAF)	Similar application of DAF to water using in-line coagulation have required the use of excess polymer to develop float.	Eliminated
Filtration		
Second stage membranes	None	Recycling permeate to head of plant required
Pressurized Media filtration	None	Provides reliable Mn removal Requires upstream clarification Waste washwater requires equalization and discharge to sewer
Disposal		
Discharge of all CWW flows to sanitary sewer	Wastes up to 3.0 million gallons per day of CWW	Minimal equipment requirements Largest volume of sanitary sewer discharge Requires additional sanitary sewer pipeline capacity to be constructed

From this preliminary screening two alternatives (CWW1 and CWW2) were carried forward for further consideration.

Alternative CWW1 - Second Stage Membranes

In this alternative, a dedicated membrane system would be installed to filter CWW flows prior to recycling to the head of the plant. No pretreatment (clarification) is required upstream. Equalization of CWW flows is required for proper membrane system operation. Phase 2 pilot testing (MPI, 2008) included verification of this approach on State Project supply at 80% recovery, providing the basis for the total waste flow estimates and Mn removal estimates.

Alternative CWW2 - Plate Settlers

This alternative consists of plate settlers for CWW clarification with space provided for future addition of pressurized media filters for enhanced Mn removal. Pressure filters would require an additional pump station. It is

recommended that pressure filters be used only as needed in the future for the following reasons:

- ILW, the source of manganese at the Baker WTP, will be used for a limited duration each year, limiting the possibility of manganese accumulation in the plant.
- Settled water will be returned to the forebay and where it will be contacted with water containing chlorine dioxide at the forebay inlet prior to transfer to the membrane system.
- The Baker WTP will be designed for blending ILW with MWDSC supplies to lower manganese concentrations. This strategy can be implemented should manganese levels exceed project goals.

14.1.3 Treatment Process Selection

A summary of final screening of alternatives CWW1 and CWW2 are presented in Table 14.3.

Table 14.3 Summary of Final Screening of Alternatives CWW1 and CWW2

Screening Criteria	Alternative	
	CWW1 Second Stage Membranes	CWW2 Plate Settlers
Direct Capital Cost ($)	3,510,000	1,640,000
Annual Operating Costs ($/year)	557,000[1,2] to be adjusted for new raw water costs.	317,000[1]
Average Plant Discharge to Sanitary Sewer at 28 mgd Production (mgd)	0.5	0.12
Projected Range of Finished Water Mn Concentrations, ILW Supply (mg/L)[3,4,5]	0.012 – 0.021	0.012 – 0.049
Projected Range of Finished Water Mn Concentrations, MWDSC Supply (mg/L)[6]	ND	ND

Note
1. Includes amortized capital costs at 4.5 percent over 30 years, purchase cost of raw water discharged to sewer, electrical, and chemical costs.
2. Includes cost components in Note 1 plus membrane replacement costs.
3. Based on operation with Irvine Lake Water at raw water Mn concentration of 0.075 mg/L. Low end of project based on residual manganese concentration measured in bench testing presented in Section 8, and 100% removal of oxidized manganese solids in the membrane system.
4. High range of estimates based on 50% removal of manganese solids in CWW clarifier (based on literature review) and 80% removal of manganese in across the membrane filtration system (based on pilot study results).
5. Irvine Lake supply to be used no more than 3 months per year; Alternative supplies (State Project Water and Colorado River) contain non-detectable concentrations of Mn.
6. MWDSC supplies have non-detectable levels of manganese.

14.1.4 Recovery

For alternative CWW2, estimated residual discharges to the sanitary sewer include:

- Neutralized chemical cleaning residuals – 10,000 gallons per day
- Sludge from the CEE clarifier – 120,000 gallons per day

The overall feed water recovery for the plant is estimated to be 99.5%, based on an average raw water flow of 28.1 mgd.

14.1.5 Sludge Disposal

It is assumed that sludge (as well as neutralized chemical cleaning residuals) will be disposed of in the sanitary sewer.

14.2 BACKWASH WATER DESIGN CRITERIA

14.2.1 Process

Criteria for key components of the CWW treatment system are included in Table 14.4, below.

14.2.2 Mechanical

14.2.2.1 Piping

Process piping for the MFWW equalization basin will be 14-inch mortar lined steel. Piping will be routed to allow for use of either one or both CWW clarifiers. Clarifier outlet piping will allow for return of settled water to either half of the forebay by gravity, and either the chlorine dioxide contact compartment or pumping equalization compartment.

14.2.2.2 Valves

Valving will include:

- Isolation valves (14-inch cast iron coated butterfly valves) for MFWW transfer pumps
- Check valves and combination air valves (cast iron bodies) for MFWW transfer pumps.
- MFWW inlet piping and each connection to the forebay will be equipped with isolation valves.

14.2.2.3 Metering

CWW will be metered at the discharge of the MFWW transfer pumps.

14.2.2.4 Coagulant / Chemical Mixing

As with the main process flash mix system, coagulant will be dosed to the CWW at the transfer pump discharge as needed to meet settled water quality goals. Dose in the CWW will depend on the dose delivered in the membrane feed water as required to maintain membrane performance and meet DBP goals. A metering pump sized for a maximum dose of 20 mg/L at 28 mgd in the main process flow will be dedicated to the CWW system. Coagulant mixing will be accomplished with a pumped diffusion flash mix system (constant speed end suction centrifugal). Estimated driver horsepower is 5 HP.

14.2.3 Structural and Layout

CWW clarifier has been sized to allow for common wall construction with the forebay.

The CWW Treatment/Handling facilities layout is further described in Exhibit 14.2 (Drawing M13 – Plan View) and Exhibit 14.3 (Drawing M14 – Section).

SECTION 15 ULTRAVIOLET DISINFECTION

15.1 OVERVIEW

The total disinfection requirements for Giardia, virus, and Cryptosporidium are established in Table 2.3 of Section 2, along with CDPH approved disinfection credits for membrane filtration, which will serve as the core of the treatment process at Baker WTP. Dedicated disinfection processes must meet the balance of the disinfection requirements not met by membrane filtration (i.e., 0.5-log Giardia inactivation and 4-log virus inactivation).

To achieve the required additional disinfection requirements, the recommendation made in the Baker Pipeline Regional Treatment Facility Feasibility Study (Malcolm Pirnie, Inc., 2007) consists of a combined ultraviolet (UV) for Giardia inactivation and free chlorine for virus inactivation.

This section discusses the use of UV, which will provide Baker WTP with a multi-barrier approach to disinfection as well as a strategy for complying with current and future regulatory requirements.

15.2 DISINFECTION GOALS

The primary goal of UV disinfection at Baker WTP is to achieve 0.5-log *Giardia* inactivation.

15.2.1 UV for Giardia Disinfection

UV systems can inactivate *Giardia* and *Cryptosporidium* at low UV doses. Therefore, UV disinfection system sizing is based on an assumption of worst-case additional *Cryptosporidium* inactivation requirement per LT2ESWTR for a compliant membrane filtration plant, i.e. 1.5-log (based on a maximum *Cryptosporidium* removal/inactivation requirement of 5.5 log and 4-log removal in the membrane system). This requirement would be triggered in the unlikely event that future *Cryptosporidium* sampling requires additional *Cryptosporidium* inactivation. The UV system will be sized to meet a UV dose of 3.9 mJ/cm^2 for 1.5-log Cryptosporidium inactiviation, and initially operated to meet a UV dose of 1.5 mJ/cm^2 for 0.5-log Giardia inactivation.

15.2.2 UV for Advanced Oxidation Processes (AOP)

UV can also be used for destruction of trace organic compounds through the use of higher UV doses alone and/or in combination with hydrogen peroxide as an advanced oxidation process (AOP). Use of UV for

destruction of trace organics (including taste and odor causing compounds) assumes that granular activated carbon (GAC) contactors are installed downstream for removal of hydrogen peroxide and byproducts generated by this process.

Given the 0.01-µg/L CDPH notification level for three nitrosamines including N-nitrosodimethylamine (NDMA), an analysis was conducted to develop a cost effective approach to account for future expandability of the Baker WTP UV system to high UV doses for photolysis of NDMA. The dose requirement for a 90% destruction of NDMA by photolysis is 700 mj/cm^2. The use of hydrogen peroxide in an AOP process would provide flexibility for partial destruction of other potential contaminants of concern including atrazine and 1,4 dioxane.

15.3 Equipment

15.3.1 Medium Pressure versus Low Pressure High Output UV Systems

UV systems for potable water applications fall into two basic categories:

- Systems with medium pressure (MP) lamps, and
- Systems with low-pressure high output (LPHO) lamps.

The LPHO lamps consume 100 to 500 watts of electricity per lamp and emit germicidal UV light at a single wavelength of 253.7 nm with electrical conversion efficiency between 30 and 40 percent. The MP lamps, on the other hand, consume 1 to 20 kW of electricity per lamp and emit germicidal UV light over a wide range of wavelengths from 200 to 300 nm with an electrical conversion efficiency of 10 to 15 percent.

The unique qualities and differences between LPHO and MP lamps have various impacts on UV system design and costs (capital and O&M) associated with the UV process. Table 15.2 summarizes the general comparison between LPHO and MP UV systems.

The decision to design around MP or LPHO is made on a case-by-case basis. The primary issues typically evaluated are capital cost, life cycle cost, space requirements, and operations and maintenance requirements. Since power cost is a major component of overall UV life cycle costs, this is frequently a key criterion for equipment selection.

Table 15.1 Generalized Comparison of MP and LPHO UV Systems

Parameter	MP System	LPHO System
Capital Cost	Lower	Higher
Space Required	Lower	Higher
Maintenance Requirements	Lower	Higher
Power Costs	Higher	Lower
Lamp Life	Lower	Higher
Fouling Rates	Higher	Lower
Headloss	Lower	Higher
Cleaning	Automatic Wipers	Offline acid rinse
Mercury Release Containment	More difficult	Less difficult
Expandability to high doses for oxidation and photolysis	More Feasible	Less Feasible

At this time, MP UV reactors are best suited for use in UV/AOP applications. Of the major conventional disinfection UV system manufacturers, two have AOP systems currently in use for destruction of organic chemicals at treatment plants utilizing H_2O_2; Trojan Technologies (London, Ontario) and Calgon Corporation (Pittsburgh, Pennsylvania). Each of these manufacturers can scale their reactors from disinfection to AOP doses by the addition of lamps and electrical equipment.

15.3.2 MP versus LPHO for Phasing in AOP at the Baker WTP

Two alternatives were evaluated for phasing in UV/AOP to meet future regulations for trace organic compounds and/or controlling taste and odor causing compounds.

- Alternative 1: Initial installation of a LPHO system for disinfection only. Replacement with a MP system for UV/AOP at year 10 (earliest anticipated timing for trace organics regulation).

- Alternative 2: Initial installation of a MP system for disinfection only. Upgrade of MP system for use as UV/AOP reactor at year 10.

15.3.3 Results Summary

Present worth including amortized capital cost and annual operations and maintenance costs for Alternative 1 are 38% less over the first 10 years than Alternative 2 when both are used for Giardia disinfection only. ($958,600 for LPHO versus $1,536,800 for MP).

Costs for years 11 through 30 were estimated as follows:

- Year 11 - Alternative 1: Remove LPHO (no salvage value), install MP UV/AOP reactors and upgrade electrical system.
- Year 11 - Alternative 2: Add additional MP lamps to existing reactors and upgrade electrical system.
- Years 11-30 - Operate both as UV/AOP reactors for 3 months of the year, and as disinfection only for 9 months of the year.

Total life cycle costs are estimated at $7.3M for Alternative 1 versus $7.1M for Alternative 2.

Alternative 1 (LPHO for initial installation and addition of MP if needed in the future) is recommended based on lower present worth of UV equipment when used for disinfection only. The detailed analysis is included in Appendix J.

15.4 DESIGN CRITERIA

Key preliminary design criteria for sizing the Baker WTP UV system are summarized in Table 15.3 below.

Table 15.2 UV System Design Criteria

Description	Units	LPHO System Criteria
Design Flow	mgd	28
Maximum Headloss[1]	inches	18
Design UVT[2]	%	80
Train Redundancy	No.	1
Treatment Requirement	Log	1.5-log *Cryptosporidum*
UV Dose	mJ/cm^2	3.9
Process Location	-	Post-MF, upstream of future GAC and CT basin
Dose Monitoring Strategy	-	UVDGM compliant MS2 or T1 phage calculated dose algorithm
Manufacturer	-	Wedeco (No other LPHO manufacturer in the USA)

Notes
1. Headloss through UV system (reactor + associated piping and components) at design flow and redundancy.

SECTION 16 CONTACT (CT) BASIN DISINFECTION

16.1 OVERVIEW

A CT Basin will be constructed to provide disinfection contact time, in accordance with regulations outlined in:

- California Surface Water Treatment Rule
- California Regulations Related to Drinking Water

The CT Basin will be a partially-buried concrete reservoir sized to provide adequate disinfection contact time for free chlorine to meet 4-log virus inactivation requirements. Sizing Calculations for the CT basin are provided in Appendix K.

16.2 DISINFECTION GOALS

The total disinfection requirements for Giardia, virus, and Cryptosporidium are established in Table 2.2 of Section 2, along with CDPH approved disinfection credits for membrane filtration, which will serve as the core of the treatment process at Baker WTP. Dedicated disinfection processes must meet the balance of the disinfection requirements not met by membrane filtration (i.e., 0.5-log Giardia inactivation and 4-log virus inactivation). Ultraviolet disinfection will be used to meet the 0.5-log giardia inactivation requirement, as discussed in Section 15. The CT Basin will be sized to meet the 4-log virus inactivation requirements.

Some of the candidate membrane filtration systems have been granted virus log removal credit by CDPH. However, it should be recognized that none of the integrity tests utilized by these systems are sensitive enough to detect a breach of the size of a virus (e.g., less than 0.5 µm). Therefore, post-membrane disinfection facilities should be designed for total virus inactivation or 4-log.

16.3 DISINFECTION BY-PRODUCTS

Provisions will be made to minimize formation of total trihalomethanes within the basin, particularly during periods of low plant flow when contact time in the CT basin is increased. In order to minimize potential for TTHM formation:

- an alternate chlorine injection point and fixed weir will be provided at an intermediate distance between the inlet and outlet of the basin.
- at low flows, the chlorine injection point can be manually changed by valving.

16.4 POST TREATMENT CHEMICAL INJECTION

Post-treatment chemicals to be injected at the CT basin include:

- Sodium hypochlorite for disinfection.
- Aqua ammonia for chloramine formation.
- Caustic soda for pH control.

Metering pumps for post treatment chemicals will be paced on a flow meter located immediately upstream of the CT basin.

16.4.1 Sodium Hypochlorite

Sodium hypochlorite will be dosed via a perforated pipe diffuser located underneath the nape of the inlet and intermediate fixed weirs. This will minimize off-gassing. Metering pump will be controlled based on the measured flow and an operator input dose setpoint. The target chlorine residual will be met by trimming the sodium hypochlorite flow to measured residual chlorine immediately upstream of the CT basin outlet weir.

16.4.2 Aqua Ammonia

Aqua ammonia for chloramine formation will be dosed via a perforated pipe diffuser located underneath the nape of the fixed outlet weir. This will minimize off-gassing. Metering pump will be based on a set ratio with the sodium hypochlorite pumps, with ammonia to chlorine ratio of between 4 and 5 to 1.

16.4.3 Corrosion Inhibitor

Corrosion inhibitor (if necessary) will be dosed at the outlet weir.

16.4.4 Caustic Soda

Caustic soda will be dosed via a perforated pipe diffuser located at the outlet weir. Metering pump will be controlled based on measure CT basin inlet flow and an operator selected dose setpoint. The metering pump flow will be trimmed based on a target pH.

16.5 DESIGN CRITERIA SUMMARY

Design criteria for the CT Basin are summarized in Table 16.1.

Table 16.1 Basin Design Criteria

Disinfection (CT) Basin		
Type: Partially Buried Concrete, Serpentine Channels	-	-
Virus Inactivation (pH=6-9, Min. Temperature = 4° C)	**LOG**	**4.0**
Concentration x Time (CT) Requirement	MG.MIN/L	12.4
Number of Trains	NO.	2
Disinfection Capacity, Total	MGD	35
T_{10} / T	PERCENT	60
L/W Ratio	-	34
Water Depth	FT	10.5
Total Volume	GAL	200,000
Overall Basin Dimensions (L x W)	FT x FT	44 x 80
Free Chlorine Average Dose	mg/L	3.0
Free Chlorine Average Residual	mg/L	2.0
Ammonia Average Dose	mg/L	0.5

Exhibit 16.1 (**Drawing M11** – Plan) and Exhibit 16.2 (**Drawing M12** – Section) summarize the preliminary design of the CT basin.

(This Page Intentionally Left Blank)

SECTION 17 TREATMENT PLANT SITE

17.1 OVERVIEW

The treatment plant of the Baker WTP project will be constructed at the Baker site, comprising the following (see Exhibit 17.1).

- Treatment Plant (or High) site – primary area of new construction,
- Pipeline Easements – for the Baker and Allen McColloch Pipelines,
- Low site – located to the east of the pipeline easement,
- Development Area – area to the northeast of the treatment plant, planned for development.

This section describes the existing and future facilities for Baker WTP at the Baker site and covers the following topics:

- Existing Facilities – description of current and future conditions,
- New Facilities – description of the size and height of each,
- Site Access – means of access for the site, with focus on chemical delivery,
- Plant Layout – a summary of layout of the plant with supporting rationale,
- Civil Site Design – preliminary grading and drainage, and
- Utilities – describing utility abandonments, replacements, new installations and pipeline materials.

17.2 EXISTING FACILITIES

Existing facilities at the Baker site include reservoirs, filter plant, pump stations and storage/office buildings. Exhibit 17.1 delineates the four areas of the Baker site, shows the location of each of the existing facilities, and categorizes each as:

a) planned for demolition,

b) protected in-place or,

c) future use under analysis by IRWD.

17.2.1 Baker WTP Use

- 16 MG Pre-Stressed Concrete Reservoir (nearest to Baker WTP) – the fully buried reservoir was used for emergency storage by Los Alisos Water District. With Baker WTP the reservoir will be converted to the clearwell for storage of product water prior to distribution.

17.2.2 Future Use Under Analysis

- 16 MG Buried Pre-Stressed Concrete (furthest from Baker WTP) – used for emergency storage by LAWD, diameter of approximately 300 ft and depth of 30 ft. The second reservoir is being analyzed as part of the Lake Forest Sub Area Master Plan. The analysis will determine whether the reservoir will continue to provide emergency storage for the LAWD Zone 1 system, or be used as recycled water storage tank long-term.

- Zone A Reservoirs - two 2.0 MG recycled water reservoirs exist on the Baker site. The reservoirs were constructed as above ground steel tanks, and currently serve the LAWD Zone A system.

17.2.3 Planned for Demolition

- Filter Building - the filter building of the former Baker Filter Plant is a metal building measuring approximately 100 ft x 100 ft - not large enough to house the membrane filters for Baker WTP. The building will be inspected for hazardous materials prior to demolition.

- Storage Building (north of existing Baker Filter Building) – this storage building is too small to be used for chemical storage. The building will be inspected for hazardous materials prior to demolition.

- Zone 1 3.4 MG Reservoir – formerly used as the clearwell for Baker Filter Plant, this buried concrete reservoir is no longer in service and will be demolished.

- Well No. 1 System - constructed to supply water to the LAWD Zone 1 domestic water system. Constructed with a design capacity of approximately 1,000 gpm, which declined to an approximate maximum of 200 gpm. The well is no longer in operation. Prior to being taken out of service the well had provided water for:

DEVELOPMENT AREA

LOW SITE

EX 16.0 MG ZONE 1
RESERVOIR (BURIED)
(EMERGENCY STORAGE)

EX 16.0 MG ZONE 1
RESERVOIR (BURIED)
(CLEARWELL)

EX
2.0 MG
ZONE A
RESERVOIR

EX
2.0 MG
ZONE A
RESERVOIR

DEVELOPMENT AREA

EX ZONE B
BOOSTER PUMP
STATION

EX ZONE 2 WEST
BOOSTER PUMP
STATION

OC-74

LOW SITE

PIPE EASEMENT

PIPE EASEMENT

HIGH SITE

STORAGE

BAKER
FILTER
BLDG

EX
OFFICE

EX
STORAGE

WELL NO. 1
RES.

3.4 MG
ZONE 1 RESERVOIR

PROPERTY
BOUNDARY

HIGH SITE

WISTERIA LANE

LEGEND

- PLANNED FOR DEMOLITION
- PROTECT IN PLACE
- BAKER WTP USE
- TO BE DETERMINED

100 0 100 200 300

SCALE: 1"=100'

H:\PDATA\10106232\CADD\WATER\EXHIBITS\PDR\6232-EXH 17.1.DWG CHESS 2/24/10 9:54 am

RBF CONSULTING

carollo

IRVINE RANCH WATER DISTRICT

BAKER WATER TREATMENT PLANT

BAKER SITE
EXISTING FACILITIES

EXHIBIT

17.1

- o supplemental water to the filter in the basins of the former Baker Filter Plant before its addition to the Zone A non-potable system in the LAWD system
- o distribution for small areas of irrigation, and
- o make-up water for manmade lakes within residential communities of Lake Forest, west of the Baker WTP site.

Now, these demands are met by water from the Baker Pipeline. IRWD is in the process of developing a plan for converted service to each of the users of the former Well No. 1 system, including recycled water or continued Baker Pipeline supply. The new system will be installed prior to site demolition and construction at Baker WTP. Thereafter, any on-site pipeline to the system will need to be protected in place, and the existing above ground steel tank can be demolished.

17.2.4 Protect In Place

- Zone 2 West Pump Station – located in the southern corner of the Baker site, supplying water from Zone 1 to 2 of the LAWD system.
- OC-74 Turn-out Building – located beside the Zone 2 West Pump Station, enabling supply of treated water from the AMP to the LAWD Zone 1 system, as necessary.
- Zone B Pump Station - near Serrano Creek, boosting water from the Zone A system (two reservoirs at the Baker site).
- Office and Storage Building (south of the existing Baker Filter Building) – both buildings will be protected in-place. Access to each facility will be impacted during construction.

17.3 NEW FACILITIES

Construction at the treatment plant will include the new facilities for:

- Raw Water – to collect, control and convey raw water for treatment
- Treatment – all facilities associated with the main treatment process
- Chemicals – to store and deliver
- Backwash Wastewater – for treatment and recovery

- Disinfection – bringing product water to drinking water standards
- Product Water – to deliver product water
- Non-reclaimable wastewater disposal

The new facilities for Baker WTP are summarized in Table 17.1.

Table 17.1 New Facilities Summary

Facility	Size	Construction
Raw Water System		
Flow Control Facility	T.B.D.	Slab on grade with surrounding wall.
TCWD Pump Station	T.B.D.	Slab on grade with surrounding wall.
Forebay	785,000 gal (71' x 135')	Cast-in-place concrete reservoir.
Feedwater Building - Pump Station - Strainer	64' x 72'	Building housing pump and flah mix / strainer.
Treatment System Treatment Building - Office / Control Center - UV Disinfection System	105' x 200'	Single story building (slab on grade).
Chemical System Chemical Building	80' x 132'	Single story building (slab on grade).
Backwash Waste Water System MFWW Equalization and Pumps	30,000 gal (20' x 25')	Buried pre-cast concrete tank w/ submersible pumps.
Sedimentation Basin	44' x 71'	Concrete basin with top just above grade.
Disinfection System Contact Basin	200,000 gal 44' x 80'	Concrete basin with top just above grade.

17.4 TREATMENT PLANT ACCESS

The future treatment plant site can be accessed from:

1. Wisteria Lane – access originating at Trabuco Road, and passing through the residential communities along Peachwood Drive, Palmwood Drive, and Wisteria Lane. Wisteria Lane has limited turning radius off of Palmwood Dr. and into the Baker site, and will require parking restriction enforcement on the south side of the street if chemical deliveries are made through this access.

2. Commercentre Drive – access is also possible from Commercentre Drive to the existing Baker site via Biscayne Bay or Indian Ocean Drive and dirt roads across the future development area. Access provided from Commercentre Drive will require the future development to accommodate turning radius requirements of the chemical delivery trucks to the Baker WTP, both during and after construction.

As site access must account for increased delivery frequency and larger chemical delivery trucks it is recommended that access via Commercentre Drive be pursued. Dependent on the final development planning, access from Indian Ocean Drive may provide the least extent of improvements, while also reducing the impact to existing or future residential communities.

If site access cannot be made through the future development, then:

- the access gate to the plant from Wisteria will need to be expanded, including some re-grading of the joint homeowner / Baker site slope, west of the existing gate,
- the City of Lake Forest will need to change to and enforce parking restriction on the southside of the Wisteria Lane,

17.5 TREATMENT PLANT LAYOUT

Alternative layouts of the treatment plant site were developed. Each alternative was based on consideration of:

- On-Site Access – based on a turning radius of 55 ft (chemical delivery truck), maintaining chemical delivery to both the east and west side of the chemical building, and providing maintenance access to all other facilities (treatment building, SCE switchboard and transfer, CT basin, forebay, feedwater pump station and backwash wastewater treatment.
- Visual and Noise Impacts – the nearby residential community to the Baker site was considered in layout alternatives. New above ground facilities were set back from the property boundary and facilities known to create noise during normal operation (i.e. Feedwater Pump Station and strainer) are planned in buildings.
- Yard Piping – the length of pipeline and number of utility crossings was considered in each alternative.

- Adjacent Facilities – the location of facilities at times was dictated by certain advantages in siting of facilities near each other.

Three alternatives were presented to the IRWD in workshop form, and to the Project Stakeholders in report form.

Alternative 1 – with the treatment building where the Zone 1 reservoir currently exists, and the chemical building where the filter building exists.

Alternative 2 – with the treatment building where the Zone 1 reservoir currently exists , and the chemical building in the center of the site.

Alternative 3 – with the treatment building where the filter building exists, and the chemical building where the Zone 1 reservoir exists.

Alternative 1, shown as Exhibit 17.2 (Drawing C1 and Exhibit ES-4), was selected for the Baker WTP based on its major advantages in addressing the considerations previously listed, and as summarized in Table 17.2.

Table 17.2 Layout Advantages

Consideration	Advantage
On-Site Access	- Ease of access to both sides of the chemical building for deliveries.
Visual and Noise Impacts	- Minimal impact with the feedwater pump station and strainers in a building, and the chemical and treatment buildings located where facilities currently exist.
Yard Piping / Adjacent Facilities	- Siting of the CT basin near the chemical building reduces pipe construction. - Siting the backwash wastewater treatment and forebay next to each other eliminates the construction water pipeline in recirculating treated backwash water.

17.6 CIVIL SITE DESIGN

Preliminary design of the grading and drainage for the plant layout is provided as Exhibit 17.3 (Drawing C2). The grading and drainage concept was based on:

- Maintaining a similar approach to site drainage as existing, including areas of sheet flow, on-site storm drains and v-gutters.

- Grading down the existing slope behind the filter building for construction of the forebay, feedwater pump station and backwash wastewater treatment facilities.

17.7 Utilities

The major utilities and construction related to utilities are covered in this section.

17.7.1 Baker Pipeline Connection

Raw water will be delivered to the Baker WTP through the Baker Pipeline. The existing connection and valve vault off of the Baker Pipeline will be used. There are currently three connections to Baker Pipeline through the vault.

- 20-inch former feedwater pipeline to the Baker Filter Plant with an existing ball valve
- 12-inch former by-pass pipeline to the Baker Filter Plant with an existing gate valve
- 12-inch pipeline to Trabuco Canyon Water District with an existing gate valve.

The 12- and 20-inch pipelines to the former filter plant combine beyond the vault into the 24-inch main feedwater pipeline. Trabuco Canyon Water District's pipeline increases to a 16-inch pipeline beyond the vault.

For Baker WTP each of the existing connections to the Baker Pipeline will be utilized as follows:

- IRWD connection (12-inch and 20-inch pipeline and valves) – the existing 12- and 20-inch connections to the Baker Pipeline will be maintained. Each of the existing isolation valves will be replaced with new ball valves. After each valve pipeline diameter increasers will be added to upsize the 20-inch pipeline to 24-inch and 12-inch to 16-inch. The new 16- and 24-inch pipelines will join beyond the valve vault into a single 36-inch.
- TCWD connection (12-inch valve and 16-inch pipeline) - will be maintained and continue to serve the Dimension Plant. The existing pipeline will serve as the majority of the suction and discharge pipe to the TCWD Pump Station.

17.7.2 Flow Control Facility and Solids

The flow control facility will be constructed with a sleeve valve having openings of approximately 3/8" to 1/2" size. Small solids may pass

through the sleeve valve and into the forebay. As a result, the construction of raw water strainers upstream of the flow control facility has recently been considered. If added to the Project, the flow control facility would be moved to the north along the access road to provide room for the strainers to be immediately downstream of the connection to the Baker Pipeline.

17.7.3 Raw Water Pipelines

Raw water pipeline will be constructed to deliver water from the Baker Pipeline to the forebay. All raw water pipelines will be cement mortar and lined steel pipe. As shown on Exhibit 17.2, reaches of 36-inch and 42-inch pipeline will be constructed between the flow control facility and forebay. Thereafter, 42-inch pipeline will be constructed from the feed water pump station to the treatment building.

17.7.4 Product Water Pipelines

Product water pipelines for Baker WTP are summarized in Table 17.3.

Table 17.3 Product Water Pipelines

From	To	(E)xisting or (N)ew	Size (in)
Treatment Building	CT Basin	N	42
CT Basin	Clearwell	N	42
Clearwell	IRWD Zone 1	E	24
Clearwell	Product Water Pump Station	N	36
Product Water PS	AMP	N	36

New 42-inch pipeline will be constructed from the treatment building to the CT basin, and the CT basin to the clearwell. At the clearwell a new connection will be required. The connection will include a valve vault adjacent to the existing reservoir, and wall (toward the top of the tank) or roof penetration and include inlet piping within the reservoir so that water discharge within the tank occurs 4 to 6 feet from the tank invert. Product water will be conveyed from the clearwell through an existing 24-inch Lake Forest Zone 1 pipeline to IRWD, and in a new 36-inch pipeline to the Product Water Pump Station and Allen McColloch Pipeline.

17.7.5 Chemical Distribution

Chemical distribution pipelines are summarized in Table 17.4, and also discussed in Section 13.

Table 17.4 Chemical Distribution Pipelines

Type	From	To	Tube Material / Carrier Pipe
Aqua Ammonia	Chemical Building	CT Basin	Teflon / 316 SS
Chlorine Dioxide	Chemical Building	Raw Water Pipeline	Teflon / PVC Sch 80
Citric Acid	Chemical Building	Treatment Building	Teflon / 316 SS
Ferric Chloride	Chemical Building	Treatment Building	Teflon / PVC Sch 80
Hydrochloric Acid	Chemical Building	Chemical Building	Teflon / PVC Sch 80
Sodium Bisulfite	Chemical Building	Treatment Building	Teflon / PVC Sch 80
Sodium Hydroxide	Chemical Building	Treatment Building	Teflon / Black Steel
Sodium Hypochlorite	Chemical Building	CT Basin	Teflon / PVC Sch 80

17.7.6 Drainage

Ultimate drainage design for the Baker WTP will need to incorporate emergency overflow conditions, as well flow from the 100 year storm. One option still to be investigated is using the proposed detention basin planned as part of the adjacent development. This detention basin is planed to be located at the low area of the Baker site. It is understood that the detention basin may be located where the two 2.0 MG Zone A reservoirs are located. If so, worst-case storm drain/overflow conditions could be handled by transferring flow from the high site to the low site by either sheet flow, construction of a new drainage pipeline, or a combination of both.

17.7.7 Water Discharge

The Baker WTP may need to convey raw or treated water for discharge to Serrano Creek in case of emergency operating conditions. Conditions upon which discharge may be required include:

- Overflow of the Forebay (raw water) – occurring only if the level in the forebay cannot be maintained and the flow control valve does not modulate appropriately to reduce or shut-off flow.

- Overflow or Discharge from the Contact Basin (treated water) – occurring only if the flow to the contact basin exceeds discharge, and the water cannot be delivered to the clearwell or the forebay.

If flow to Serrano Creek is required, there are two likely discharge points. These are:

- East of the 16 MG Reservoirs – the overflow pipeline for the two 16 MG reservoirs consists of 18-, 36- and 48-inch pipeline. The discharge point is on the Baker site, east of the reservoirs and north just north of the property boundary / off-site trail. At the discharge point is existing rip-rap and a 72-inch pipeline to carry the flow under the existing trail to Serrano Creek. The existing pipeline was constructed as storm drain line 'B' of the Zone 1 emergency storage reservoirs.

- East of the Zone 2 West Pump Station – a storm drain was also constructed near the Zone 2 West Pump Station with the Zone 1 emergency reservoirs. The line is referenced as storm drain line 'D'. The discharge of this pipeline does not appear to have rip rap, and would be anticipated to have greater impact to Serrano Creek if utilized.

Further evaluation of water discharge options and locations will be provided during final design.

17.7.8 Sewer

Concurrently with the design of Baker WTP, the Lake Forest Sub Area Master Plan is being prepared by Dudek. The report includes an evaluation of the sewerage of the Baker Site (Baker WTP and future development). Therefore, a definitive plan for the disposal of the plant's non-reclaimable wastewater (NRW) will be developed as the master plan progresses. At present, two possible approaches to the disposal of wastes have been considered, both of which require a crossing of Serrano Creek with new pipeline:

- Construction of a gravity sewer from the sedimentation basin, that will be constructed as part of this Project to the southern corner of the project site, where a sewer siphon would be constructed to cross Serrano Creek and connect with the 15-inch VCP pipeline on the other side or,

- Construction a pump station and forcemain along the same alignment, and to the same terminus.

IRWD and RBF have also begun consideration of the following:

- Construction of a shallow gravity sewer along the foot path that parallels Serrano Creek on its north side. The discharge location would be about 600 feet north of Trabuco Road to an existing 15-inch VCP sewer.

Each of these options appear feasible. However, the shallow sewer option may be preferred because it does not require a crossing of Serrano Creek. However, the final recommendation depends on the results of the master planning efforts. Further evaluation of the sewer

(This Page Intentionally Left Blank)

SECTION 18 PRODUCT WATER PUMP STATION

18.1 INTRODUCTION

A Product Water Pump Station (PWPS) will be constructed to pump product water from the clearwell to the Allen McColloch Pipeline for delivery to each Project Stakeholder, except Irvine Ranch Water District. Irvine Ranch Water District will receive water from the clearwell by gravity, into the Lake Forest Zone 1 system.

This section covers the preliminary design of the Product Water Pump Station, addressing:

- Capacity
- Hydraulics
- Site Development
- Design Criteria
- Surge System

18.1.1 Capacity

The capacity for the Product Water Pump Station will be 33 cfs, based on the total capacity for Baker WTP, minus IRWD's capacity. Table 18.1 summarizes capacity in the pump station by agency.

Table 18.1 Product Water Pump Station Capacity

Agency	Capacity (cfs)
El Toro Water District (ETWD)	5
Moulton Niguel Water District (MNWD)	13
Santa Margarita Water District (SMWD)	13
Trabuco Canyon Water District (TCWD)	2
TOTAL	**33**

18.1.2 Hydraulics

Hydraulic calculations were completed for the suction and discharge of the Product Water Pump Station. A summary of each is provided.

Suction side hydraulics - were based on the low and high water operating levels of the Baker WTP clearwell. The proposed clearwell for the Baker WTP is the southern most 16.0 MG reservoir at the Baker Site. The tank was constructed with a low water level of 595 ft and high water level of 621 ft above mean sea level (amsl). For the basis of preliminary design of the PWPS the design minimum HGL at the pumps was evaluated as 585 ft amsl calculated to be 10 feet of headloss from the clearwell to the pump station.

Discharge side hydraulics - were based on the hydraulic grade line of the Allen McColloch Pipeline. The hydraulic grade line of the Allen McColloch Pipeline varies significantly between summer (high demand) and winter (lower demand) conditions. The absolute minimum and maximum HGL in the AMP are understood to be a low of 630 ft, and high HGL of 806 ft per coordination with Flow Science. Metropolitan Water District has performed analysis of the AMP pipeline under peak day (maximum day demands) up to the year 2035. Based on that analysis, the lowest (non-surge) stable HGL was determined for 2035 to be approximately, 703 ft at OC-88 (South County Pump Station), and 701 ft at OC-74 (IRWD connect on the Baker site).

Table 18.2 PWPS Capacity and HGL Requirements

Description	Parameter
Hydraulics (Suction)	
Water Level in Clearwell	595 - 621 ft
Maximum Flow w/ one standby pump (4 pumps)	33 cfs
Maximum Flow w/ no standby pump (all 5 pumps)	40 cfs
Headloss thru Suction Piping (Maximum)	24 ft
Minimum HGL at Product Water Pump Station (per headloss calculation)	585 ft
Hydraulics (Discharge)	
Discharge HGL in Allen McColloch Pipeline	630 – 806 ft
Maximum Flow	33 cfs

A summary of delivery capacity and HGL requirement is provided as Table 18.3.

Table 18.3 PWPS Capacity and HGL Requirements

Agency	Capacity (cfs)	Distributed By	HGL Required (ft)
Irvine Ranch Water District	10.5	IRWD System	595 – 621 ft
El Toro Water District	5	AMP	630 ft (min) to 806 ft (max)
Moulton Niguel Water District	13		
Santa Margarita Water District	13		
Trabuco Canyon Water District	2		

Hydraulics calculations for the Product Water Pump Station were completed to determine the total dynamic head, type and number of pumps, develop system curves and plot preliminary pump curves utilizing variable speed drives to address the fluctuations in discharge head. Table 18.3 summarizes the capacity and HGL requirements. Table L1 of Appendix L also depicts the HGL conditions from the clearwell to the AMP.

Hydraulic analysis verified the HGL fluctuation in the AMP require variable speed drives to maintain discharge flow. Speed reduction down to 70-percent was considered in selecting the type and number of pumps.

The design of the pump station includes four (4) duty pumps + one (1) stand-by pump configuration. It was determined through coordination with pump manufacturers and hydraulic calculations that the infrequent low HGL range below 690 ft should be separated from the pump design operating band, and managed by pressure reduction with a throttling valve. If a baseload for the Product Water Pump Station is established, it may be possible to change the pump station design to include single speed pumps. This issue will be further investigated in final design.

Exhibit 18.1 depicts the operating range of the pump station, and depicts the operation conditions where pressure reduction will be needed to provide flow during low head conditions in the Allen McColloch Pipeline.

See Table L2 of Appendix L for the design criteria of the pumps.

18.1.3 Operation

The Product Water Pump Station will be operated to deliver up to 33 cfs of flow to the Allen McColloch Pipeline. Pressure information will be received from the AMP to determine the correct operating range of the pumps and the throttling valve.

18.2 SITE DEVELOPMENT

The Product Water Pump Station site layout is shown in Exhibit 18.2 (Drawing C4).

To the south of the pump station is a 24-inch pipeline that was used to fill the existing 16 MG reservoirs with treated water through the OC-74 turn-out off of the Allen McColloch Pipeline.

The extent of grading, and reserved space for a surge tank, SCE transformer, switchboard, and power generator. An access road around the pump station will be constructed for ease of access for maintenance / equipment trucks. The proposed pump station building will require 2 – 3 ft of soil retainment along the north wall which will have to be accounted for in the structural design. However, this minimizes the grading implications and prevents disturbance of soil over the top of the northern most 24-inch IRWD / LAWD Zone 1 pipeline.

18.3 MECHANICAL

The mechanical layout of the PWPS is based on four vertical turbine type pumps, with a fifth pump as stand-by, a high-to-low pressure bypass, and a throttling valve. Suction and discharge header pipelines will be 36-inch based on the full design capacity of the pump station (33 cfs or 14,800 gpm). Pipelines to and from each pump will be 20-inch (8.25 cfs or 3,700 gpm). All isolation valves shall be butterfly type. In addition, a throttling valve, motor operated ball valve type will be installed to reduce head when the AMP has a low HGL. The ball valve will be located within the PWPS pump room and above the finished floor with a minimum of 3 ft height to centerline. The mechanical design for the pump station will include HVAC for air conditioning the electrical room planned to have five variable frequency drive controllers.

Exhibit 18.3 (Drawings M20 and M21) shows the mechanical layout of the Product Water Pump Station.

Pump Curve
4 Pump Configuration - Product Water Pump Station

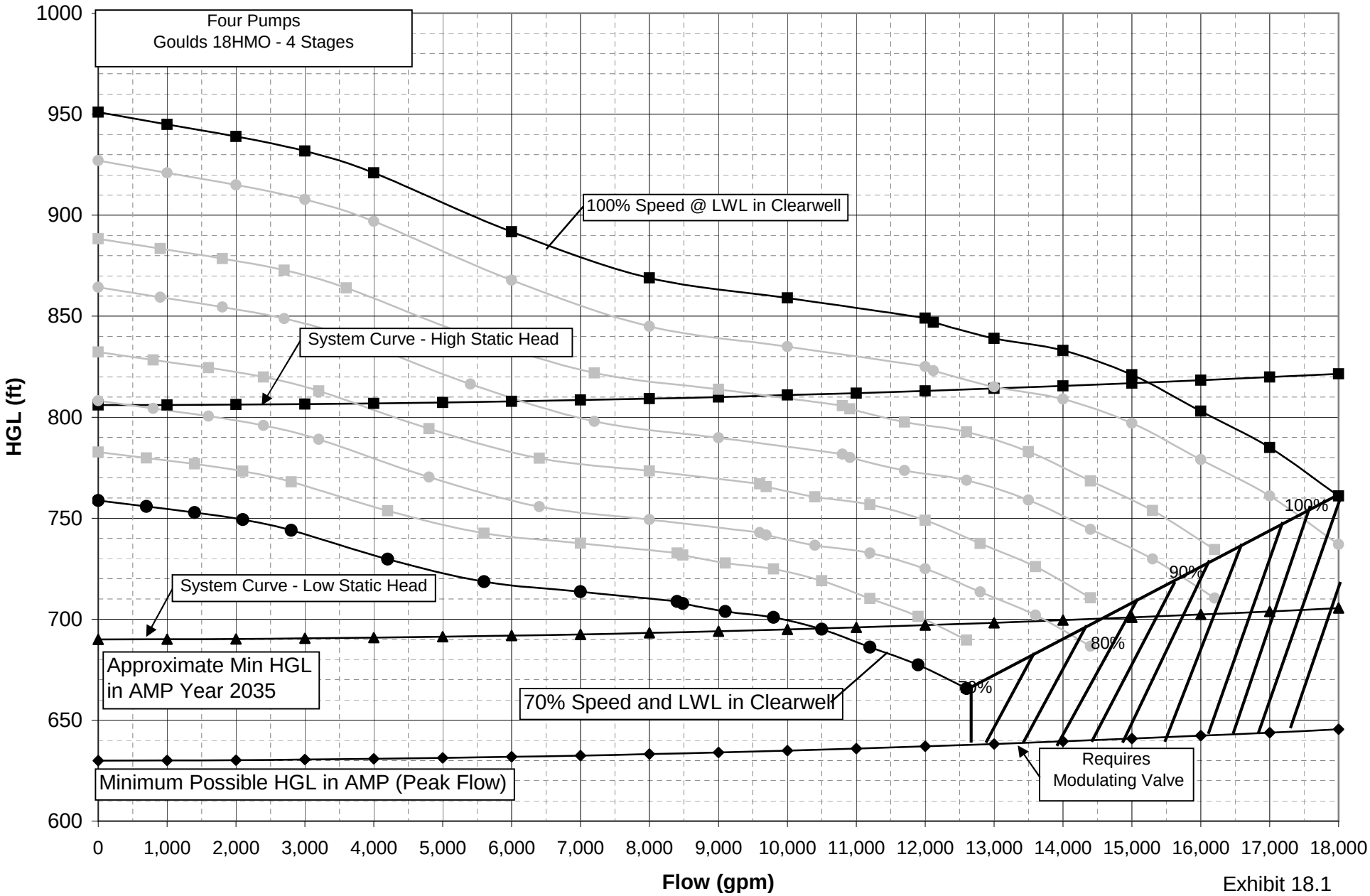

Exhibit 18.1

The discharge pipeline from the PWPS will be 36-inch diameter. The pipeline will connect to the AMP at design Station 353+35 (Record 353+37.20). This is the current location of an air-valve as well as the emergency inter-connection vault for the AMP to the Baker Pipeline. It is anticipated that the connection facility will involve the following:

- Utilization of the existing air-valve structure at Station 353+37.20 as the connection point.
- Construction of one or two new vaults for the installation of a magnetic meter, check valve, new isolation valve for the existing AMP/Baker cross-connection, and a removable spool to render the cross-connection inoperable when flow from the AMP to the Baker is not required.

The new vault(s) will be reinforced concrete, approximately ten feet deep and will be situated adjacent to the existing access road. The length and width of the vaults cannot be determined until the design criteria are established by MWD.

Exhibit 18.1 (Drawing M22) shows the proposed metering vault for the pump-in connection to the Allen McColloch Pipeline. The drawing has been provided to MWD for review.

18.4 DESIGN CRITERIA

The design criteria for the Product Water Pump Station are provided as Table 18.4.

Table 18.4 Product Water Pump Station Design Criteria

Description	Units	Value
Type: Vertical Turbine	-	-
No. of Pumps	NO.	5
No. of Redundant Pumps	NO.	1
Capacity per Pump	GPM	3,700
TDH (Maximum)	FT of Water	235
Size	HP	300
Mechanical	-	-
Upstream Pipeline Diameter	IN	36
Inlet Pipeline	IN	20
Discharge Pipeline	IN	20
Isolation Valves	IN	20
Throttling Valve	IN	24
Downstream Pipeline Diameter	IN	36

18.4.1 SURGE

Preliminary surge analysis for the Product Water Pump Station has been completed. The analysis analyzed power failure to the Product Water Pump Station under three steady state flow conditions.

1. Full AMP winter demands without OC-88 and OC-88a pump stations or surge protection at the pump stations.

2. Full AMP summer demands with OC-88 pump station and its associated surge protection in operation.

3. Full AMP winter demands with OC-88a pump station and its associated surge protection in operation.

The results of the surge analysis show that loss of power to the Product Water Pump Station will cause a pressure drop wave in the AMP. When reflected the wave would cause an upsurge wave along the AMP exceeding the 830 ft HGL level. In order to prevent the excessive HGL (greater than 830 ft) it is recommended that a pressurized surge tank of 1,810 cu. ft. be installed downstream of the flow control ball valve. Additionally, it was found that a surge relief valve downstream of the flow control ball valve will be necessary. The combination of the surge tank and pressure relief valve will serve to prevent the HGL in the AMP from exceeding 830 ft under all three operating conditions.

Analysis is on-going and will be continued into and through design to finalize the facilities necessary and in support of coordination with MWD. The conclusions provided herein are based on the Draft Report, which has yet to be reviewed by MWD.

18.4.2 GEOTECHNICAL

A geotechnical investigation, including borings and soil data logging will be completed during the design of the Product Water Pump Station.

SECTION 19 ELECTRICAL SITE INFRASTRUCTURE

19.1 OVERVIEW

This section describes the electrical distribution systems for the Raw Water Pump Station, Baker Water Treatment Plant and Product Water Pump Station.

19.2 RAW WATER PUMP STATION

SCE will provide a 480 volt, 3 phase, electrical service to accommodate the loads of the Raw Water Pump Station. The single line diagram for the pump station is included in Exhibit 19.1 (Drawing E11).

The new metered switchboard is located on the pump station site as shown on Exhibit 19.2 (Drawing E10). The service to the pump station will be provided from an upsized SCE transformer also shown on Exhibit 19.2. The existing transformer serves three facilities; 1) EOCWD flow control facility, 2) MWDOC-Gerald price facility and 3) IRWD Santiago aqueduct flow control facility. The IRWD flow control facility will be demolished. The new SCE transformer will be sized to serve the EOCWD facility, MWDOC facility and the new pump station. The pump station contractor will install a new concrete pad with slab box for the upgraded transformer and conduits from the transformer to the switchboard. SCE will install the new transformer, wiring from the transformer to the switchboard and set the meter in the switchboard. Electrical service to the existing facilities will be unavailable during the transformer replacement. IRWD will advise EOCWD and MWDOC of the planned upgrades to the electrical service and required outages.

The motor control center, VFDs and control panel are located as shown on Exhibit 19.2 (Drawing E10). The motor control center includes feeder circuit breakers for the VFDs, circuit breaker feeder for air conditioning, a 480 -120/208 Volt stepdown transformer and 120/208 Volt distribution panel to accommodate auxiliary loads such as lighting and receptacles. The control panel houses the PLC, radio, UPS and associated control components. Radio communication will be used between the pump station and the treatment facility. The antenna will be mounted on the roof of the pump station building at a height specified by IRWD. The radio communication and system integration is further described in Section 20.

19.3 GENERAL POWER SERVICE AND DISTRIBUTION – BAKER WATER TREATMENT PLANT SITE

19.3.1 Existing Conditions

Four electrical metered services are currently installed at the Baker site. These metered services are listed below and shown on Exhibit 19.3:

Treatment Building - 480 Volt, 3 phase

Treatment Building - 208 Volt, 3 phase

Zone B Booster Pump Station - 480 Volt, 3 phase

Zone 2 West Booster Pump Station – 480 Volt, 3 Phase

The proposed water treatment plant requires a 480 Volt, 3 phase electrical service to accommodate the approximate connected load of 3,776 Amperes. The existing Treatment Building 480 Volt and 208 Volt services (noted as Items 1 and 2 above) will be demolished. The proposed product water pump station requires a 480 Volt, 3 phase electrical service to accommodate the approximate load of 1,913 Amperes. The existing Zone B Booster Pump Station and Zone 2 West Booster Pump Stations are currently served at 480 Volts, 3 phase, and have connected loads of 751 and 700 Amperes, respectively.

SCE requires that the existing metered services and all new services required at the site be combined and served from one SCE point of connection. The services for the proposed water treatment plant and product water pump station will be provided from the overhead distribution line located adjacent to the existing water treatment facility. The new service plan also incorporates the existing Zone B Booster Pump Station and Zone 2 West Booster Pump Station.

Exhibit 19.4 depicts the proposed single line diagram and includes a summary of the loads for the existing facilities. Exhibit 19.5 (Drawing E2) depicts the proposed locations for the new electrical components.

19.3.2 Overall Site Electrical Distribution

The new electrical service for the water treatment plant site will be metered at 12.5 kV. SCE will install and maintain the 12.5 kV metering structure, medium voltage wiring, transformers and low voltage wiring

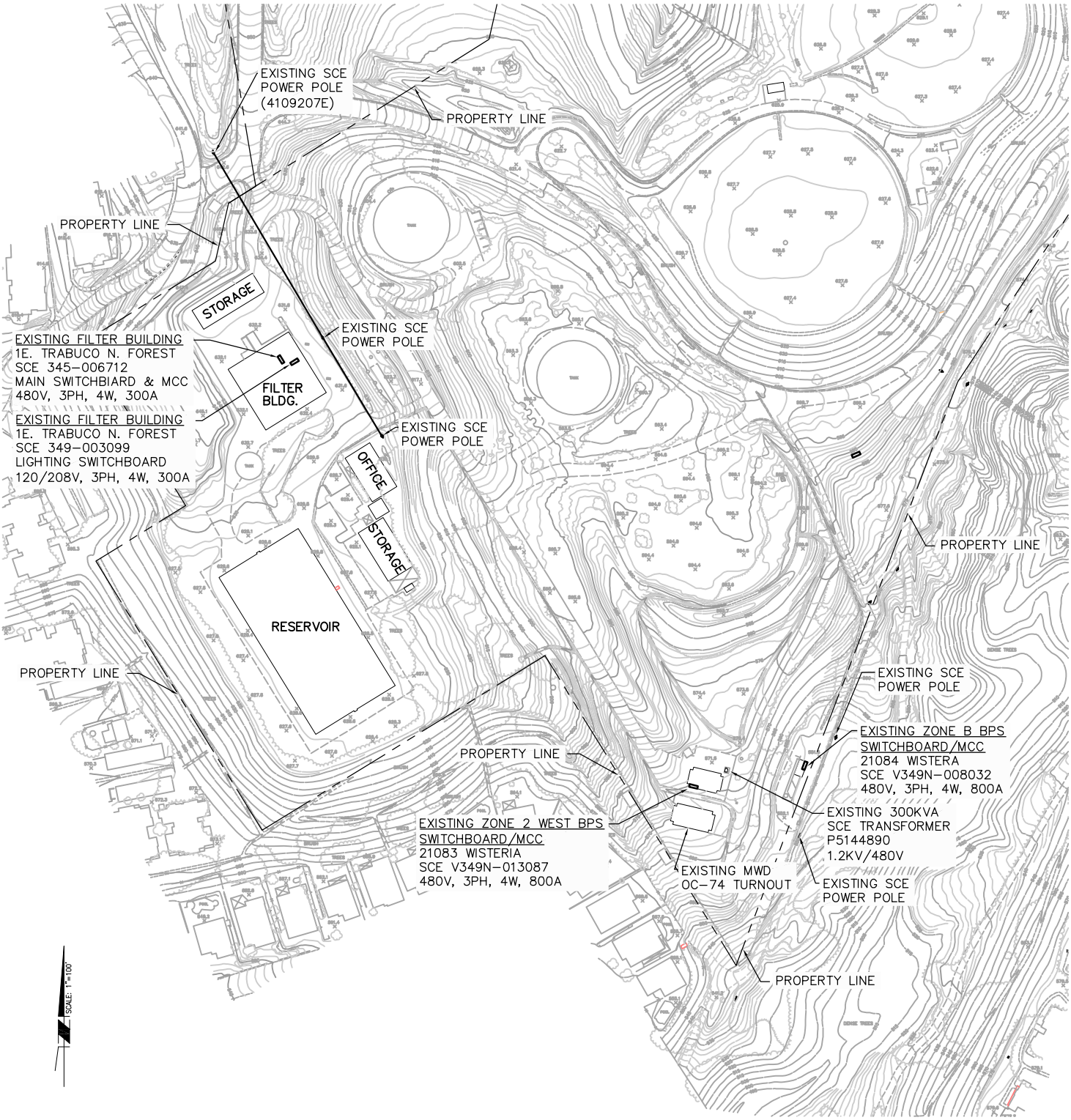

EXISTING SCE ELECTRICAL SERVICES

1"=100'-0"

RBF CONSULTING

carollo

IRVINE RANCH WATER DISTRICT

BAKER WATER TREATMENT PLANT

EXISTING ELECTRICAL SERVICES

EXHIBIT 19.3

H:\PDATA\1010623\2\CADD\WATER\EXHIBITS\PDR\6232-EXH-19.3.DWG CHESS 3/2/10 1:35 pm

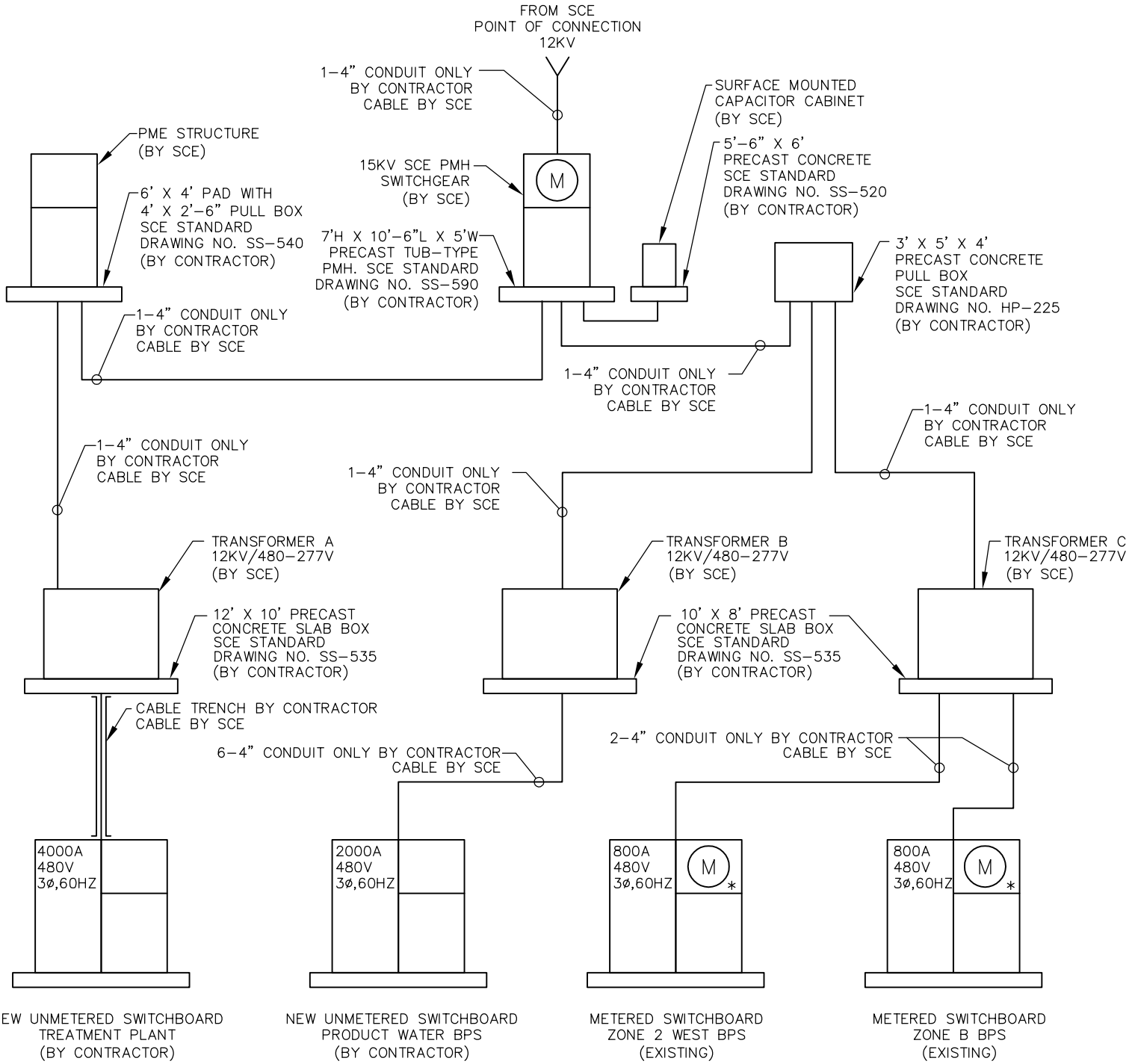

* SCE TO REMOVE EXISTING METER

ZONE 2 WEST BPS

LOAD SCHEDULE		
EQUIPMENT	HP	AMPS
PUMP 1	50	65
PUMP 2	100	124
PUMP 3	200	240
PUMP 4	200	240
15KVA XFMR	–	31
TOTAL		700

ZONE B BPS

LOAD SCHEDULE		
EQUIPMENT	HP	AMPS
PUMP 1	200	240
PUMP 2	200	240
PUMP 3	200	240
15KVA XFMR	–	31
TOTAL		751

RBF CONSULTING

carollo

IRVINE RANCH WATER DISTRICT

BAKER WATER TREATMENT PLANT

OVERALL POWER SERVICE BLOCK DIAGRAM

EXHIBIT

19.4

H:\PDATA\10106232\CADD\WATER\EXHIBITS\PDR\6232–EXH–19.4.DWG CHESS 3/2/10 1:36 pm

from the transformers to the unmetered switchboards. The electrical contractor will install the conduit systems, concrete slab boxes for the transformers and other structures as required by the approved SCE service plan. SCE requires these facilities be inspected and approved by SCE field inspectors prior to SCE installing the wiring in conduits or setting transformers on the concrete pads. The Electrical Contractor will coordinate these inspections with the SCE field inspector. These requirements will be included in the project specifications prepared for the project.

The existing metered switchboards for the Zone B Booster Pump Station and Zone 2 West Booster Pump Stations will remain. SCE will provide the electrical service from the new SCE transformer "C" to each switchboard and will remove the existing meters at each switchboard.

New unmetered switchboards will be installed by the electrical contractor for the proposed product water pump station and the water treatment facility. SCE will install the wiring from the new SCE transformers to the unmetered switchboards. If the electrical usage at the proposed booster pump station is required to be individually metered for rate purposes, a power meter will be included in the electrical design for the proposed pump station. This power meter will be owned and maintained by IRWD.

19.3.3 Location of Electrical Facilities

The 12.5 kV metering and transformers for the water treatment plant will be located near the water treatment plant. SCE will serve these facilities from the existing SCE pole located at the entrance to the facility. Serving the facility from this pole allows the removal of the existing SCE poles adjacent to the water treatment facility. The existing SCE pole is located outside the IRWD property line requiring an easement from the adjacent property owner for the new underground service installation. SCE requires an easement with a width of six (6) feet extending from the existing SCE pole to the IRWD property line as depicted on Exhibit 19.5 (Drawing E2). SCE will obtain required easements from adjacent property owners. However, SCE will not pay a property owner for an easement and any charges for the easement would be paid by IRWD.

SCE transformer "A" to feed the proposed water treatment facility will be located near the new 12.5 kV metering structure. SCE transformer "B" will serve the new product water pump station and will be located near the

new product water pump station. SCE transformer "C" will serve the existing pump stations and will be located in the vicinity of the existing pump stations.

19.3.4 Construction Requirements

The electrical contractor for the water treatment facility will install the infrastructure for the SCE facilities including the concrete pads, pullboxes and conduit systems. SCE requires that clearances be maintained around SCE electrical equipment as depicted on Exhibit 19.6. The SCE facilities must be installed on non-sloped areas with appropriate access for SCE service vehicles.

SCE requires an easement from IRWD for the capacitor bank and PMH structure for the 12.5 kV primary metering equipment located as shown on Exhibit 19.6.

19.3.5 SCE Contractual Requirements

SCE will bill on a monthly basis for the installation and maintenance of the installed SCE facilities. Energy usage and demand charges will also be included on the monthly bill from SCE. The monthly charges will be determined by SCE after loads for the facility are finalized. These charges will be determined in a similar manner to those established at the Los Alisos Water Reclamation Plant where SCE owns and maintains the 12.5 kV system and the service is metered at 12.5 kV under Time of Use rate schedule TOU-8.

19.3.6 Treatment Plant

The 480 Volt, three phase electrical service is provided to the Treatment Plant per Section 19.3 and as shown on Exhibit 19.5 (Drawing E2).

The single line diagrams for the facilities at the treatment plant are included as Exhibit 19.7A to 19.7F (Drawings E3, E5 to E9). Power to each of four motor control centers will be provided from Switchboard MSB-2. Four motor control centers provide power distribution for the loads of the treatment plant area as follows:

1. MCC – WTP feeds RO Treatment Plant loads
2. MCC – FWPS feeds Feedwater Pump Station Loads
3. MCC – CHEM feeds chemical system loads

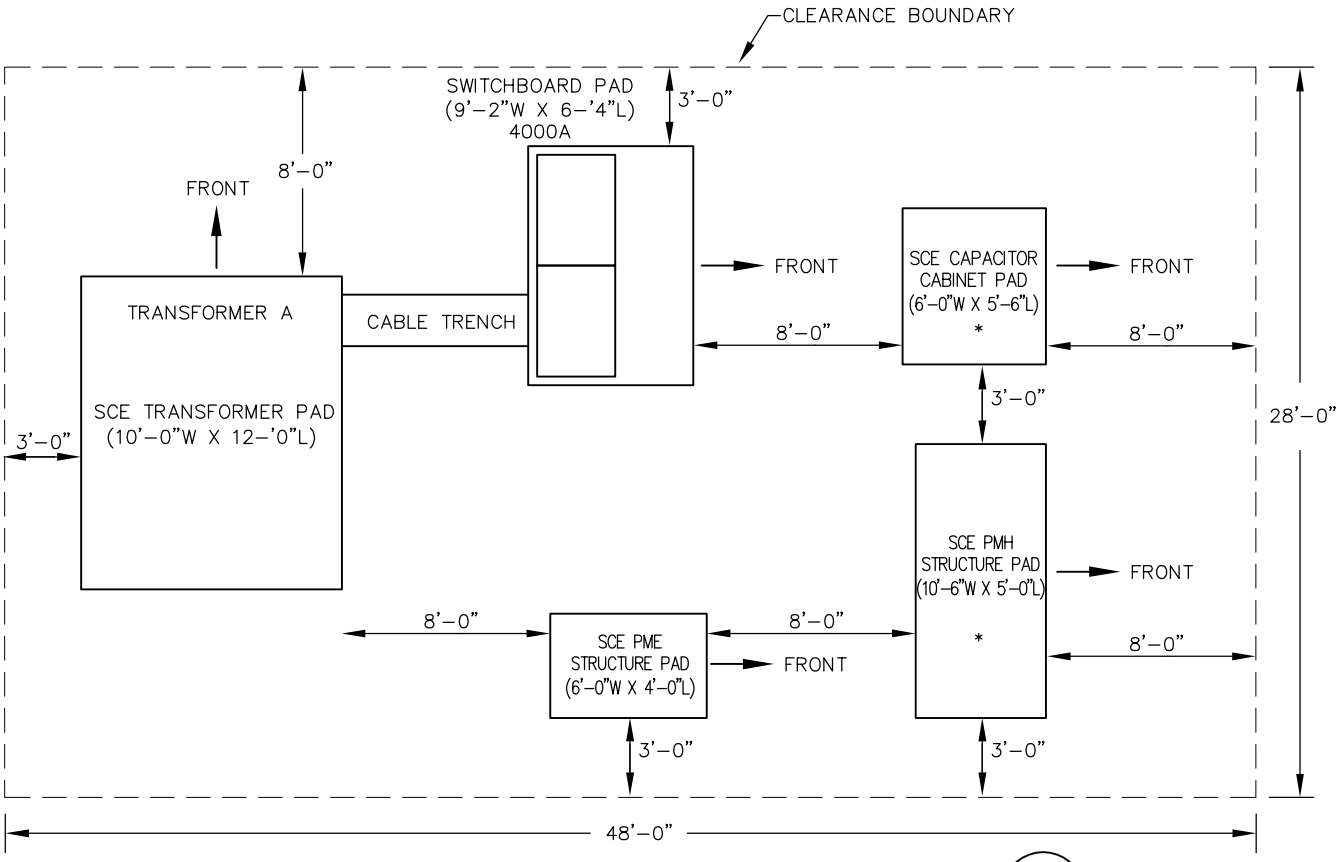

WATER TREATMENT PLANT ELECTRICAL SERVICE EQUIPMENT CLEARANCE (A / 19.8)

NTS

* SCE REQUIRES EASEMENT FROM IRWD
FOR CAPACITOR & PMH STRUCTURE PADS

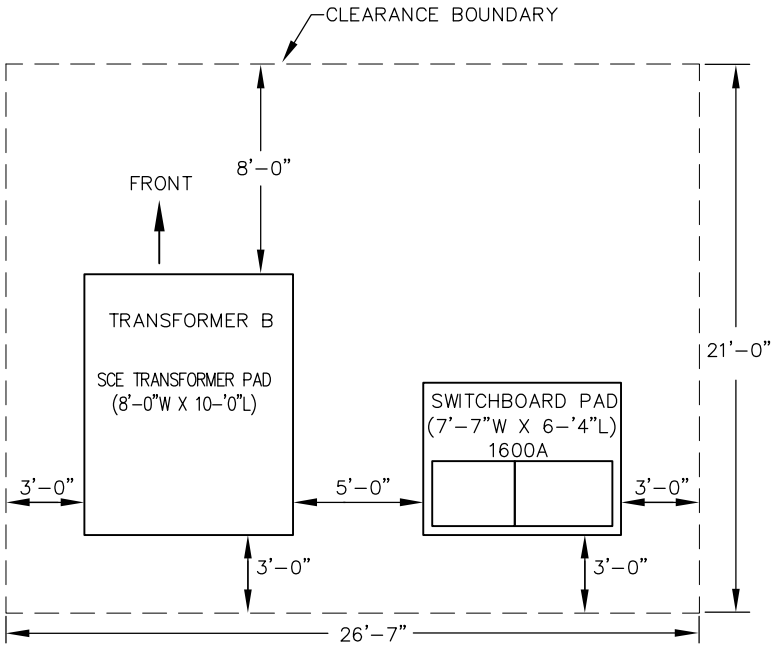

PRODUCT WATER BPS ELECTRICAL SERVICE EQUIPMENT CLEARANCE (B / 19.10)

NTS

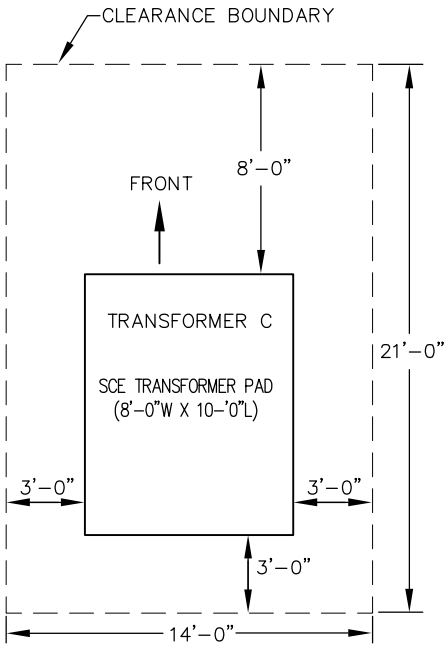

TRANSFORMER C CLEARANCE (C / 19.5)

NTS

RBF CONSULTING

carollo

IRVINE RANCH WATER DISTRICT

BAKER WATER TREATMENT PLANT

ELECTRICAL SERVICE EQUIPMENT CLEARANCE

EXHIBIT 19.6

H:\PDATA\10106232\CADD\WATER\EXHIBITS\PDR\6232-EXH-19.6.DWG CHESS 3/2/10 1:34 pm

4. MCC – TCWD feeds Trabuco Canyon Water District pump station loads

The SCE transformer and unmetered switchboard to serve the treatment plant are located as shown on Exhibit 19.8 (Drawing E4). The Motor Control Centers will be located in dedicated rooms within the treatment plant, feedwater pump station and chemical buildings. The MCC for the Trabuco Canyon Pump Station will be located adjacent to the pump station in a weatherproof NEMA 3R airconditioned enclosure.

19.3.7 Product Water Pump Station

The 480 Volt, three phase electrical service is provided to the Product Water Pump Station as described in Section 19.3. The single line diagram for the pump station is included in Exhibit 19.9 (Drawing E13).

The SCE transformer and unmetered switchboard are located on the pump station site as shown on Exhibit 19.10 (Drawing E12). The automatic transfer switch and motor control center are located in the pump station electrical room. The motor control center includes five 300 horsepower variable frequency drives, feeder circuit breaker for air conditioning, a 480 -120/208 Volt stepdown transformer and 120/208 Volt distribution panel to accommodate auxiliary loads such as lighting and receptacles. The control panel is also located in the electrical room and houses the PLC and associated control components. The control panel and control functionality is further described in Section 20.

19.4 Backup Power

19.4.1 Baker Site Generators

A description of backup power is provided for the treatment plant and product water pump station.

19.4.1.1 Treatment Plant

A 2,000 kW diesel emergency generator will provide 480 Volt, 3 phase, power to the Water Treatment Plant in the event that SCE power is unavailable. Under emergency conditions, the loads selected to run on emergency power will be selected by

PLC programming. The generator is sized to accommodate selected loads of the plant as summarized in Table 19.1.

Table 19.1 Water Treatment Plant Generator Sizing Criteria

Load	kW
Membrane Process	230
Chemical	165
Flash Mix Strainer	6
BWWWT	135
Feedwater Pump Station	1125
Trabuco Canyon Water District Pump	40
Total	**1701**

The emergency generator is equipped with an integral fuel tank sized to operate the generator at full load for 24 hours. The location for the emergency generator is shown on Exhibit 19.8 (Drawing E4).

19.4.1.2 Product Water Pump Station

A 1,100 kW diesel emergency generator will provide 480 Volt, 3 phase, power to the Product Water Pump Station in the event that SCE power is unavailable. The generator is rated to accommodate selected loads at the pump station as indicated in Table 19.2.

Table 19.2 Product Water Pump Station Generator Sizing Criteria

Load	HP/kW	Backup Generation Required
Pump 1	300 HP	Yes
Pump 2	300 HP	Yes
Pump 3	300 HP	Yes
Pump 4	300 HP	Yes
Pump 5 (Standby)	300 HP	No
Air Conditioning	60 kW	Yes
Lighting/Receptacles	10 kW	Yes

The emergency generator is equipped with an integral fuel tank sized to operate the generator at full load for 24 hours. The pump station generator is located as shown on Exhibit 19.10 (Drawing E12).

19.4.1.3 Raw Water Pump Station

An emergency generator or a connection for a portable emergency generator is not required for the Raw Water Pump Station. This decision is based upon the following:

1. The SCE power supply in the area of the pump station is reliable.
2. SCE generally restores power in a short time following an outage.
3. Alternatives exist for Baker WTP operation without the Baker Raw Water Pump Station:
4. Changing back to supply from Santiago Lateral
5. Irvine Lake water supplied by gravity at a reduced capacity
6. The period of usage of Irvine Lake Water is expected to be limited to about six to eight weeks annually. This short period of time minimizes the probability of a power failure during the annual window of operation of the pump station. The ability to deliver water from the lake by gravity, at about fifty percent of maximum, will mitigate the effect of a power loss by allowing the WTP to continue operating, albeit at a production rate less than maximum.

19.5 ELECTRICAL DESIGN CRITERIA

The major electrical equipment will be specified as indicated Table 19.3:

Table 19.3 Electrical Equipment Summary

Equipment	Manufacturer/Model Number	Sole Source (Yes/No)
Motor Control Center	Allen-Bradley, no equal	Yes
Motor Management Relays	Multilin 369, Model HIRMOE, no equal	Yes
Switchboards	GE, Square D, or equal	No
Power Monitor	Multilin PQM-T20-C-A, no equal	Yes
Transformer, Dry Type	Square D electromagnetically shielded type, or equal	No
Automatic Transfer Switch	ASCO 7000 Series, GE Zenith ZTS, no equal.	No
Generator	Onan, Caterpillar	No
Variable Frequency Drive	Allen Bradley Power Flex 18-pulse, no equal	Yes

SECTION 20 INSTRUMENTATION AND CONTROL

20.1 OVERVIEW

This section summarizes the proposed approach for the following components of instrumentation and control system design:

- Equipment/instrument tagging
- Modes of equipment control
- Control system network
- IRWD preferred control system equipment manufacturers
- SCADA and PLC programming

20.2 EQUIPMENT / INSTRUMENT TAGGING

Equipment and instruments will be tagged in accordance with the IRWD Process Equipment & Instrument Tag Guideline, which is included as Appendix M.

20.3 MODES OF EQUIPMENT CONTROL

With the exception of equipment provided as part of the Membrane System, including blowers, compressors, backwash pumps, and pumps related to the membrane cleaning system, there will be two primary modes of control for every piece of equipment in the facility: Local and Remote. In the Local mode, the equipment will be controlled via control devices (pushbuttons and/or selector switches) located in the field either directly adjacent to the equipment or in a field control panel located near the equipment. In the Remote mode, the equipment will be controlled remotely either by a PLC or by control functions invoked through the facility SCADA system.

20.3.1 Local Control – Gates and Valves

Each gate and valve will be equipped with a LOCAL-OFF-REMOTE (LOR) selector switch and OPEN/CLOSE pushbuttons.

- LOCAL position - the OPEN/CLOSE pushbuttons will be enabled, thus allowing the equipment to be controlled locally.
- OFF position - the local OPEN/CLOSE pushbuttons will be disabled and all modes of control will be inhibited. The gate/valve will remain in the position that it was in when the LOR switch was placed in OFF.

- REMOTE position - the local OPEN/CLOSE pushbuttons will be disabled, and the equipment will be controlled remotely.

In addition to the position status of the gate/valve, the position of the LOR switch will be monitored via discrete inputs to the PLC that controls/monitors the equipment, and will be displayed in SCADA.

20.3.2 Local Control – Process Equipment (pumps, fans, etc.)

Each piece of process equipment will be equipped with a HAND-OFF-AUTO (HOA) selector switch.

- HAND position - the equipment will start.
- OFF position - the equipment will stop and all modes of control will be inhibited.
- AUTO position - the equipment will be controlled remotely.

In addition to the status of the equipment (running, failed, etc.), the position of the HOA switch will be monitored via discrete inputs to the PLC that controls/monitors the equipment, and will be displayed in SCADA.

20.3.3 Remote Control – Gates and Valves

Each gate and valve will have a software AUTO/MANUAL (A/M) selector switch in SCADA, which will be enabled when the LOR switch in the field is placed in the REMOTE position. In addition to the A/M switch, each gate and valve will have software OPEN/CLOSE pushbuttons in SCADA.

- MANUAL position - the gate/valve will be controlled with the software OPEN/CLOSE pushbuttons in SCADA.
- AUTO position - the gate/valve will be controlled by the PLC.

In general, the facility will be designed such that gates and valves operate in the AUTO mode of control under normal conditions.

20.3.4 Remote Control - Process Equipment (pumps, fans, etc.)

Each piece of process equipment will have a software AUTO/MANUAL (A/M) selector switch in SCADA, which will be enabled when the HOA switch in the field is placed in the AUTO position. In addition to the A/M

switch, each piece of equipment will have software START/STOP pushbuttons in SCADA.

- MANUAL position - the equipment will be controlled with the software START/STOP pushbuttons in SCADA.
- AUTO position - the equipment will be controlled by the PLC.

In general, the facility will be designed such that process equipment operates in the AUTO mode of control under normal conditions.

20.4 CONTROL SYSTEM NETWORK

A preliminary SCADA Block Diagram showing the major control system network components is provided as Exhibit 20.1 (Drawing I011).

As shown on the SCADA Block Diagram, the facility control system will be comprised of a network of distributed PLC's and a SCADA network. The quantity and location of PLC's will be established primarily by geography where the PLC closest to the unit process will be the point of connection for that unit process to the control system. The following is a summary of the PLC locations and the major unit processes that will be connected to each.

PLC Location	Major Unit Processes
Raw Water Pump Station	Raw Water Pump Station
Forebay	Feed Water Pump Station Raw Water Strainer & Flash Mix Backwash Water Treatment
Treatment Building	Membrane System Ultraviolet Disinfection Membrane Filtration Waste Washwater CT Basin
Chemical Building	All chemical storage and feed systems Flow Control Facility
Product Water Pump Station	Product Water Pump Station

In addition to a PLC, each control panel will include the following major components: fiber patch panel, managed network switch, and an operator interface terminal (HMI) comprised of a PC, keyboard, and a touch screen monitor mounted on the control panel door.

With the exception of the Raw Water Pump Station, the facility control system network will be comprised of a self-healing, fiber ring employing rapid spanning-tree network protocol via connections to the managed network switches installed in the individual control panels. The self-healing, fiber ring will be used to implement PLC-to-PLC, PLC-to-SCADA, and SCADA-to-PLC monitoring and control functions by linking all of the control system components (PLC's, HMI's, Servers, etc.). The Raw Water Pump Station control panel will communicate with the facility control system via wireless radio link.

Operator access to the SCADA system for process control and monitoring will be provided at each process control panel, as well as at workstations located in the Control Room. In addition to the SCADA workstations in the Control Room, the design will also include one computer to be used as a development station. The SCADA Block Diagram shows various other network devices, such as servers and network attached storage devices, however the necessity and selection of these devices will be coordinated and finalized with the District during final design.

To enhance reliability of the control system network, redundant fiber optic cables comprising the fiber ring will be specified. Wherever possible, the redundant fiber optic cables will be installed in separate conduits to decrease the likelihood of a simultaneous failure of both cables. Furthermore, where the fiber optic ring connects to the control room network equipment, the two sides of the fiber optic ring will be installed separate conduits, decreasing the likelihood of isolating the control room network equipment from the unit process control panels. Given the self-healing nature of the network architecture, if one side of the fiber ring is broken, the communication paths will be automatically re-routed thus allowing the control system to remain functional.

20.5 CONTROL SYSTEM EQUIPMENT MANUFACTURERS

In conversations with District Staff, and through the process of reviewing the District's standard specifications, the following preferred control system equipment manufacturers have been identified:

Equipment	District-Preferred Manufacturer
Programmable Logic Controllers	Modicon Quantum with Unit Processors
PLC Programming Software	Modicon Unity
SCADA Software	Wonderware Archestra
HMI Monitors	Allen-Bradley 17" Industrial Touch Screen
SCADA Servers	Dell
Managed Ethernet Switches	Hirschmann
Ethernet Radios	MDS
Uninterruptible Power Supplies (UPS)	Powerware
Control Panel Enclosures	Hoffman

20.6 SCADA AND PLC PROGRAMMING

Services for SCADA and PLC programming will be procured under a stand-alone contract that will be assigned to the General Contractor selected for construction of the Baker WTP. Carollo/RBF will develop the Request for Proposals (RFP) for the SCADA and PLC programming services based on the District's standard programming agreement, and the specific software requirements for the Baker WTP control system design.

(This Page Intentionally Left Blank)

SECTION 21 ARCHITECTURAL

21.1 OVERVIEW

The architectural theme of the District's new Baker Water Treatment Plant (Baker WTP) is critical to the overall success of the project. The 5.25-acre site is located on top of a hill south-east of Wisteria Lane in Lake Forest, CA. The site is surrounded by residential neighborhoods and a future 3-acre public park. This section presents the summary of the effort by the PDR team to develop the appropriate architectural theme.

21.2 ARCHITECTURAL CRITERIA

The initial step in developing the architectural theme was to identify criteria determined to be important to all the stakeholders. Three categories of criteria were considered: neighborhood and developer concerns; District and stakeholders issues; and process criteria. Detailed issues are outlined below.

21.3 NEIGHBORHOOD AND DEVELOPER CONCERNS

- Provide space/landscaping to mitigate view from properties on the west side.
- Minimize structure height so not to obstruct neighbor's view
- Buildings should have a community building appearance, and the site should not resemble an industrial park with outdoor machinery and chemical storage tanks visible from the east side future park, residential development, and surrounding residents
- Mechanical equipment sound level should be attenuated in building

21.4 DISTRICT AND STAKEHOLDER ISSUES

- Buildings and facilities positioned on site "campus style"
- Build-out capacity achieved as part of the project to be 28 mgd
- Facilitate access for chemical delivery trucks
- No administration building
- Small lab or wet room included in the treatment building
- Reserve footprint for potential future GAC contactors and PAC dosing system

21.5 PROCESS DESIGN CRITERIA

- Plant building useful life to be 50 years
- Corrosive chemicals to be stored in chemical building, and to be used in the forebay (chlorine dioxide), treatment building (membrane cleanings), CT basin (disinfection) and backwash treatment facilities (coagulation).

21.6 ARCHITECTURAL THEME

Based on the above criteria listed in paragraph 21.2, the architectural theme was developed around:

- Walls: concrete masonry unit (CMU) blocks
- Roof: steel deck
- Doors (office part of treatment building): aluminum frame
- Doors (other locations): hollow metal framed doors
- Windows: aluminum frame

The following paragraphs illustrate the architectural concept for different buildings and treatment processes to be built at the Baker WTP.

21.7 MEMBRANE FEED WATER PUMP STATION

21.8 TREATMENT BUILDING

21.9 CHEMICAL BUILDING

21.10 CT BASIN

21.11 PRODUCT WATER PUMP STATION

SECTION 22 SITE SECURITY

22.1 OVERVIEW

This section discusses the security measures envisioned at each of the facilities of the Baker Water Treatment Plant Project.

22.2 RAW WATER PUMP STATION

The Raw Water Pump Station will be located at the Peters Canyon site, which already has security measures consisting of an access gate and chainlink fence. Both measures will be maintained at the site. Portions of the chainlink fence will be removed and replaced during construction.

22.3 TREATMENT PLANT

A chainlink fence will be constructed along the access road east of the Baker Pipeline easement for security of the Baker WTP site. The existing access gate from Wisteria Lane will be maintained. A new access gate will be constructed for vehicle access from the low site area. Surveillance cameras will be installed at the treatment plant as part of site security. The number and locations of cameras will be determined during design. The manufacturer and model is shown in Table 22.1.

Table 22.1 Security Camera Manufacturer Data

Manufacturer	Model Number
Industrial Video and Control	PTZ-3330-01

22.4 FLOW CONTROL FACILITY AND TCWD PUMP STATION

The flow control facility and TCWD Pump Station will be constructed within a block wall enclosure with chainlink roof.

22.5 PRODUCT WATER PUMP STATION

A chainlink fence will be constructed around the Product Water Pump Station. The site is already bounded to the south by an existing fence separating the Baker site from Serrano Creek. The new fence will run along each access road, along the top of slope to the north of the pump station and tie into the existing fence.

(This Page Intentionally Left Blank)

SECTION 23 ECONOMIC EVALUATION

23.1 OVERVIEW

The purpose of this section is to discuss capital and O&M cost factors and assumptions used to develop the Baker WTP Project cost estimates. Opinion of costs for both capital and O&M are also included, and were based upon the project components and features general described in Sections 4 to 22 of this report. All costs presented herein are described in February 2010 dollars (ENR index = 8660).

The capital cost estimates herein approximate Class 3 budget estimates as defined by the Association for the Advancement of Cost Engineering (AACE), with associated accuracy of -10 to +30 percent. Class 3 level estimates are intended for budget, authorization of contract purposes. These estimates are based on the Engineer's perception of current conditions in the project area and are subject to change as variances in cost of labor, materials, equipment, services provided by others, or economic conditions occur.

Estimates previously prepared for the project include:

- The Baker Pipeline Regional Treatment Facility Feasibility Study, prepared by Malcolm Pirnie in January 2007, which included an addendum in June 2007 to estimate the cost of treated water from Baker WTP Project for comparison with the projected cost of treated water from Metropolitan Water District.

- The Baker Regional Water Treatment Plant – Design Concept and Cost Update with concept level costs, prepared following the award for design by RBF Consulting and Corollo Engineers in November 2008.

- Updated project cost estimate in June 2009, by RBF / Carollo, to take into consideration (i) preliminary design concepts (including the potential of pumping raw water supplied from the Santiago Lateral through the Baker Pipeline) and (ii) alternative treatment plant capacities.

- Preliminary Design Memorandum No. 14 – Cost Estimate, dated November 2009, issued to the Project Stakeholders including costs under three Project alternatives, and comparison of Baker WTP Project treated water cost with water purchased through Municipal Water District of Orange County.

23.2 OBJECTIVES

The objectives of the economic evaluation of the Baker WTP Project are to:

- Identify the basis of the probable capital costs
- Provide a detailed breakdown of probable construction costs
- Estimate capital costs
- Determine the amortized value over a 30-year period
- Estimate O&M costs
- Escalate O&M costs based on expected rates
- Estimate the cost of water produced by Baker WTP Project and compare it to the projected cost of treated imported water.

23.3 BACKGROUND

Preliminary Design Memorandum No. 14 presented the cost for the BAKER WTP PROJECT under three alternative Project definitions. The three alternatives are summarized in Table 23.1.

Table 23.1 BAKER WTP PROJECT Alternatives Summary

Baker Water Treatment Plant		Alternative 1	Alternative 2	Alternative 3
1	Raw Water Delivered	37 cfs 23.9 MGD	37 cfs 23.9 MGD	43.5 cfs 28.1 MGD
2	Product Water Produced	36.5 cfs 23.6 MGD 23,782 AFY[2]	36.5 cfs 23.6 MGD 23,782 AFY[2]	43.0 cfs 27.8 MGD 28,018 AFY[2]
3	Membrane Filtration Capacity [1]	25.7 MG	35.1 MG	30.2 MG
4	Membrane Rack Configuration	N+1	N+4	N+1
5	Number of Membrane Racks	10	13	12
6	OC-33 Modification	60 cfs	60 cfs	60 cfs
7	Regulating Reservoir	1.0 MG	n/a	n/a
8	Constant Head / Balancing Tank	0.5 MG	0.3 MG	n/a
9	Forebay	n/a	n/a	1.0 MG
10	Raw Water Pump Station (Design Capacity)	47 cfs	47 cfs	53.5 cfs
11	Product Water Pump Station (Design Capacity [3])	29 cfs	29 cfs	33 cfs

[1] MF Capacity is based on flow rates for Raw Water and Membrane Filtration Washwater, and defined as volumetric (MG).
[2] Annual Production in AFY is based on a 90-percent utilization rate.
[3] Product Water Pump Station (Design Capacity) is rounded to the nearest cubic foot per second.

Each alternative was fully analyzed to generate cost values for capital and operation and maintenance, and quantify the overall product water cost. Table 23.2 summarizes the product water cost by alternative as presented in Preliminary Design Memorandum No. 14.

Table 23.2 Cost Summary by Alternative

Alt	Description	Raw Water (cfs)	Product Water (cfs)	Product Water Cost ($/AF)
1	Regulating Reservoir, Constant Head Tank, N+1 Membrane Configuration	37 cfs	36.5 cfs	$765
2	Constant Head Tank, N+4 Membrane Configuration	37 cfs	36.5 cfs	$771
3	Forebay Reservoir and Feedwater Pump Station, N+1 Membrane Configuration	43.5 cfs	43.0 cfs	$766

At the Project Stakeholder meeting held in November 2009, Alternative 3 was selected. The primary factors influencing the decision included:

- Land Acquistion – not required for Alternative 3.
- Schedule Impact – without land acquisition, no impact to schedule.
- Comparable cost – product water cost for each alternative was within $5 per acre-foot (< 1% cost variation between alternatives).

23.4 ECONOMIC EVALUATION

The remainder of this section provides an updated economic evaluation consistent with the current design concept for the Project as described in Sections 4 to 22. While the current definition of the Project stems from the selection of Alternative 3 there have been some modifications to the Project since the issuance of PDM No. 14, including:

- OC-33 Modification = 100 cfs
- Forebay – Capacity = 0.785 MG

- Number of Membrane Racks (dependent on manufacturer) = 14 (max)

Table 23.3 summarizes the Project as currently defined.

Table 23.3 Project Summary

	Baker Water Treatment Plant	Value
1	Raw Water Delivered	43.5 cfs 28.1 MGD
2	Product Water Produced	43.0 cfs 27.8 MGD 28,018 [2] AFY
3	Membrane Filtration Capacity [1]	30.2 MG
4	Membrane Rack Configuration	N+1
5	Number of Membrane Racks (Max.)	14
6	OC-33 Modification	100 cfs
7	Forebay	0.785 MG
8	Raw Water Pump Station (Design Capacity)	53.5 cfs
9	Product Water Pump Station (Design Capacity)	33 cfs

[1] MF Capacity is based on flow rates for Raw Water and Membrane Filtration Washwater, and defined as volumetric (MG).

[2] Annual Production in AFY is based on a 90-percent utilization rate (evaluated at 330 days per year).

23.5 Capital Costs

The estimates of capital costs in this section provide: 1) a more detailed break down of the Baker WTP Project and associated "integration facilities", and 2) refined unit costs for general, sitework, mechanical, and electrical components of the Project. Unit costs were derived from recent RBF/ Carollo projects.

23.5.1 Construction

Construction costs are estimated based on the following:

- Capital cost are Class 3 Estimates as defined by AACEI with a -10% to +30% range of accuracy.
- Mobilization and demobilization, insurance and management are based on 8-percent of total construction costs.
- Pressurized Membrane Filtration (PMF) Equipment costs are based on an average cost developed from the budget estimates provided by Pall and Siemens on October 23, 2009.

- Electrical capital costs are assumed at 12.5-percent of total corresponding facility cost.

The total capital cost estimate is summarized in Table 23.4, and shown in further detail in Table Q1 of the Appendix Q.

23.5.2 Other Capital Costs

Engineering

The cost of engineering (design) of the Baker WTP Project is based on the authorized budget, plus an the cost for the design of the forebay and feedwater pump station.

Environmental

The cost of preparing the environmental documentation for Baker WTP Project is based on the preparation of an Environmental Impact Report (EIR). IRWD has received a fee estimate of $170,000 from their environmental consultant for the preparation of the report.

Construction Management / District Costs

IRWD will perform construction management and inspection activities during the construction of the proposed project. These costs are allocated under “District Costs”. IRWD staff has provided an estimate of District Costs to the Project stakeholders. The estimate covered costs for project management, field support, construction administration services and inspections, and totaled to $2,200,000.

Baker Site Land Use Cost

The Baker Water Treatment Plant Agreement (Agreement) defines cost to the project for the use of land at the Baker Site in Lake Forest, California. A cost of $110,000 / acre was defined in the Agreement based on an appraisal of land value. The high site of the Baker Site is the reserved area for construction of Baker WTP Project. The high site has an approximate area of 4.0 acre. Thus, land use cost is shown as a one-time cost of $440,000.

(This Page Intentionally Left Blank)

Table 23.4 - Baker WTP Project - Summary of Estimated Capital Costs [1]

Baker Water Treatment Plant	Cost
Equipment and Buildings	
WTP Equipment, Sitework and Buildings	$31,869,000
Mobilization / Insurance / Management [2]	$2,550,000
Subtotal (Equipment and Buildings)	***$34,419,000***
Integration Facilities	
OC-33 Expansion	$240,000
Raw Water Pump Station	$2,908,000
Flow Control Facility, Forebay Reservoir, TCWD PS and Feedwater PS	$4,300,000
Product Water Pump Station	$3,504,000
Backup Power	$1,250,000
Mobilization / Insurance / Management [2]	$976,000
Subtotal (Integration Facilities)	***$13,178,000***
SUBTOTAL (Equip. and Bldgs + Int. Facs.)	***$47,597,000***
District Costs [3]	**$2,200,000**
Baker Site Land Use Cost [4]	**$440,000**
Environmental [5], Engineering[6]	**$4,607,000**
Contingency / Legal [7]	**$6,611,000**
TOTAL ESTIMATED CAPITAL COST	**$61,455,000**

[1] Capital cost are Class 3 Estimates as defined by AACEI with estimated -10% to +30% range of accuracy

[2] Mobilization / Insurance / Management Cost calculated at 8-percent of capital cost

[3] Cost provided by IRWD - includes project management, field support, construction administrative services, inspection and GandA.

[4] Cost for land use at Baker Site per Baker WTP Agreement Section 3.1. Area = 4 acres. Unit Cost = $110,000 /acre

[5] Environmental Documentation cost is based on EIR preparation cost provided to IRWD.

[6] Based on approved design fee for Baker WTP plus authorized flow test budget, and design fee for forebay and feed water pump station.

[7] Contingency / Legal is based on 15-percent of Subtotal (Equipment and Buildings + Integration Facilities excluding cost for Moblization, Insurance and Management).

23.6 Operation and Maintenance Costs

O&M costs have been developed based on previous projects and engineering calculations. A summary of total O&M costs is provided in Table 23.5. All costs are discussed below and further information is provided in Appendix Q.

23.6.1 Energy Costs

Energy costs are estimated based on a unit cost of $0.13 per kilowatt-hour (KWh). Tables Q2 through Q8 in Appendix Q estimate the annual energy costs, in February 2010 dollars. An escalation rate of 5-percent was used to estimate future energy costs.

23.6.2 Chemical and Replacement Costs

A breakdown of the chemical costs for the treatment facility is provided in Tables Q9 and Q10 in Appendix Q. Membrane replacement costs are summarized in Table Q11 in Appendix Q. An escalation rate of 5-percent is used to estimate future chemical and replacement costs.

Table 23.5 Estimated Annual O&M Cost Summary

Baker Water Treatment Plant [1]		Value
1	Chemical Mixing	$3,800
2	MF System	$716,300
3	UV System	$21,200
4	Process Chemicals	$1,212,100
5	Energy Costs from Pumping	$1,516,300
6	Washwater Pumping	$15,900
7	Labor [2]	$379,600
8	Other System O&M Costs [3]	$75,000
Cost per Year ($) [4]		**$3,940,000**

[1] Energy, Chemical, and Consumables (Replacement) costs are esclated at a annual rate of 5-percent.

[2] Labor costs are esclated at a annual rate of 3-percent.

[3] Other O&M costs are esclated at a annual rate of 3-percent.

[4] Based on 90% treatment plant utilization (evaluated at 330 days per year). Rounded to nearest $1,000.

23.6.3 Labor Costs

The labor costs are estimated for the Project in Table Q12 in Appendix Q. The labor cost includes time for two full time operators at the treatment plant. This value may change depending on the final classification of Baker WTP Project by the California Department of Public Health. An escalation rate of 3-percent is used to estimate future labor costs.

23.6.4 Other O&M Costs

This evaluation takes into consideration additional O&M costs associated with the overall Project system, including the integration facilities. This cost is assumed at 2-percent of the amortized cost annual capital costs, and are escalated at an annual rate of 3-percent to estimate future costs.

23.7 Baker WTP Water Cost

Based upon the capital and O&M costs developed herein, an economic evaluation was performed for the Project calculating the cost of water available via the Baker WTP Project project, and comparing this cost with projected MWDOC treated water costs. Cost of Baker WTP Project water is estimated in Table 23.6based on the following estimates and assumptions:

- Costs defined in February 2010 Dollars for direct comparison with prior analysis (ENR index = 8660).
- A capital cost amortized over 30 years at 4.5-percent interest (per Feasibility Study).
- Energy, chemicals, and replacement costs assumed to escalate at a rate of 5-percent annually.
- Labor costs assumed to escalate at a rate of 3-percent annually.
- Other O&M costs assumed to escalate at a rate of 3-percent annually.
- Untreated Tier 1 and Tier 2 water costs from MWDOC assumed to escalate at a rate of 21.5-percent and 14.3-percent, respectively, in year 2011, and a rate of 5-percent thereafter .

23.8 Water Cost Comparison

When comparing the cost of water for Baker WTP Project with cost of treated water imported by MWDOC, it is anticipated that treated water from the Baker WTP Project will cost the same as imported water by the year 2017,

Table 23.6 - Summary of Annual Treated Water Cost (2010 Dollars)

Baker Water Treatment Plant	COST
Total Capital Cost	$61,455,000
Capital Cost	**$61,455,000**
1. Annual Capital Cost [2]	$3,749,000
2. Annual Project O & M Costs [3]	
2.1 Energy, Chemicals, and Consumables	$3,485,600
2.2 Labor	$379,600
2.3 Other O & M Costs [4]	$75,000
Subtotal Annual Capital/O&M Cost	**$7,689,200**
($/AF)	**$274**
3. Cost of Untreated Water from MWDOC [5] ($/AF)	**$492**
Water Production[6] = 28,018 AFY	
Baker WTP Treated Water Unit Cost ($/AF)	**$766**

Abbreviations: AFY = Acre-Feet per Year, FWPS = Feedwater Pump Station, PW = Product Water, Reg = Regulating, Res = Reservoir RW = Raw Water

[1] Unit Cost of Water is for 2009 cost assumptions

[2] Based on 30 year period at 4.5%

[3] See Table 14.3 for Estimated Annual O&M Cost by alternative.

[4] Based on 2% of annual capital cost

[5] Based on estimates shown in Table Q14 of Appendix Q (per 9/1/2009 MWD rate change). This cost represents an increase of $68 / AF to Tier 1 and 2 melded untreated water rate since last estimate prepared June 2009.

[6] Based on 90% treatment plant utilization (evaluated at 330 days per year).

Annual Payment Calculation

Annual Capital Costs	
Interest (Annual) =	4.5%
Rate (Monthy) =	0.00375
Years =	30
Months =	360
Loan Amount =	$61,455,000
Monthly Payment =	$312,417
Annual Payment [7] =	**$3,749,000**

[7] Based on CRF value of 0.061

approximately 5 years after project startup. Thereafter, the Baker WTP Project is anticipated to produce water at lower cost than as purchased through MWDOC. This is based on the following methodology:

- A meld of Tier 1 and Tier 2 rates has been developed for this evaluation (90% of Tier 1 rate, and 10% of Tier 2 rate). The cost of the Tier 1 and 2 melded rate per the water rates 'Effective 1/1/2009' was $424 per acre-ft.

- On September 1, 2009 the Metropolitan Water District of Southern California adjusted the cost of treated and untreated water. The cost of the untreated water melded water rates 'Effective 9/1/2009' was recalculated to be $492 / AF.

- The melded cost for treated and untreated water, based on water rate projections provided by Municipal Water District of Orange County and Irvine Ranch Water District, are provided in Table Q13 in Appendix Q.

- Annual capital recovery and O&M costs were converted to $/acre-foot ($/AF/yr) values using the anticipated production volume of 28,018 AFY. As indicated in the cost summary tables shown above, projected costs are determined based on a plant utilization rate of 90-percent.

- A detailed breakdown of estimated future water costs is provided in Table Q14 in Appendix Q. Table Q15 in Appendix Q provides a summary of the estimated water costs over the next 20 years based upon projections of untreated water costs from MWDOC and water treatment costs for Baker WTP Project.

- Exhibit 23.1 presents a graphical representation of the escalated costs for Baker WTP Project and MWD treated water over the next 20 years. Table Q16 in Appendix Q summarizes the cost difference by year for treated water from Baker WTP Project and MWD.

(This Page Intentionally Left Blank)

Exhibit 23.1 - Cost of Water Comparison
Imported Water (MWDOC)
vs.
Baker WTP

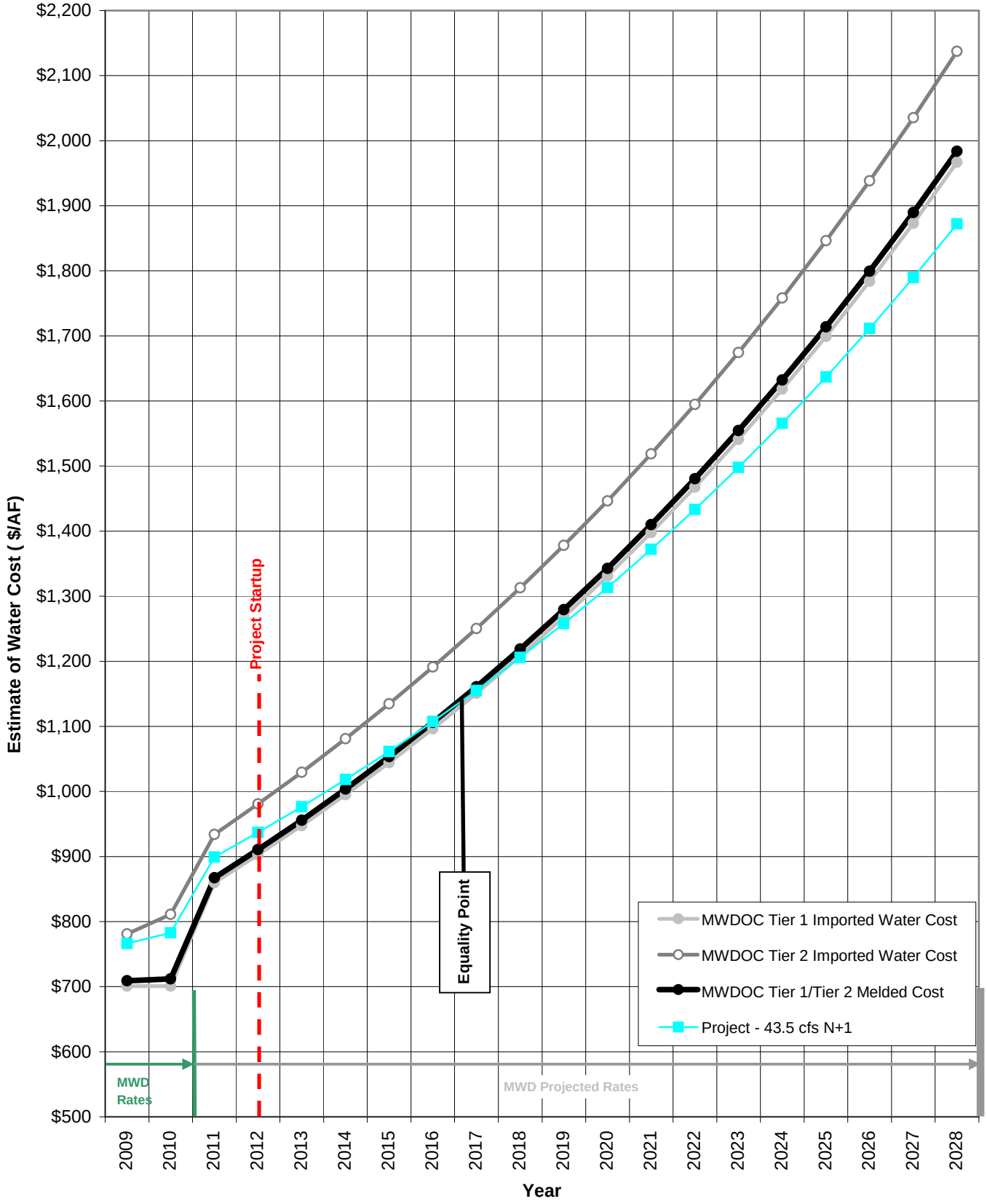

SECTION 24 INSTITUTIONAL FACTORS

24.1 BACKGROUND

Institutional factors that must be considered in the design, and prior to construction of the Baker WTP, include:

- MWD Coordination.
- Regional Water Quality Control Board Coordination.
- Other Permitting and Coordination.

24.2 MWD COORDINATION

Several issues remain to be resolved with MWD prior to the final design of the Baker Water Treatment Plant project. These include:

- Capacity of OC-33
- Flow through OC-33
- MWD acceptance of Baker surge analysis recommendations
- Product Water Pump Station discharge location and connection design
- MWD acceptance of AMP surge analysis recommendations
- Raw water delivery protocol
- Encroachment permits into AMP pipeline easement

24.2.1 Capacity of OC-33

Since the original construction of the Baker Pipeline, the capacity of OC-33 has been changed on at least two occasions: from an initial capacity of 40 cfs, up to 100 cfs, and then back to its current capacity of 40 cfs. With the construction of the Baker WTP Project, a turnout metering capacity of 100 cfs is recommended (see Section 4). As a result, the existing meter may have to be replaced or the nameplate capacity revised.

24.2.2 Flow through OC-33

When raw water is being directly supplied to Baker WTP through the Santiago Lateral, occasional discharges past OC-33 will occur when there is a temporary rejection of the Baker Pipeline flow by the flow control facility at Baker WTP. Generally, these flows can be expected to be

lower than 10 cfs, which is less than ten percent of the proposed meter capacity of 100 cfs. (The MWD Administrative Code provides that flows through a turnout that are less than ten percent of the rated meter capacity will be billed at the full 10 percent of the meter's capacity.) Unless some arrangement or variance is worked out with MWD, the project could be paying for more water than it receives.

Additionally, when water is supplied from Irvine Lake to the Raw Water Pump Station, there may be occasions when a reverse flow occurs through OC-33, which would be picked up by OC-13.

24.2.3 Baker Surge Analysis

The Baker Pipeline surge analysis completed for this project, predicts slight transient increases in the operating HGL of the Santiago Lateral, following a power failure at the Baker Raw Water Pump Station. These increases are minor (5 feet max) but are in excess of the design HGL for the Santiago Lateral. Coordination with MWD has been initiated and will continue through final design.

24.2.4 Product Water Pump Station Discharge to AMP

The connection point of the Product Water Pump Station discharge line to the AMP, has been tentatively placed at a location just downstream of the existing Baker/AMP emergency connection. Neither the location of the connection point nor the design details of the connection have been reviewed with MWD. MWD's Administrative Code (paragraphs 4700 and 4800) covers the design elements required for a connection that receives water from its system, but not that introduces water into its system. Coordination with MWD has been initiated and will continue through final design.

24.2.5 AMP Surge Analysis

A surge analysis of the AMP will be required to analyze the impacts of the Baker WTP. When complete, the recommendations of the AMP study will be reviewed and accepted by MWD.

24.2.6 Raw Water Delivery Protocol

Raw water deliveries through the MWD system are critical to the operation of the Baker WTP. The MWD Administrative Code defines and limits the advance notice requirements for variations in the deliveries through its service connections.

The MWD Administrative Code requires that the receiving agency stipulate a continuous demand rate. The Baker WTP system will be unable to comply this with this requirement under certain conditions. These conditions will be mitigated, to some extent, by allowing discharges to Irvine Lake and by absorbing small flow variations in the plant's forebay.

This matter must be coordinated with MWD to ensure a mutual understanding of the technical capabilities, as well as the institutional constraints, of the Baker WTP are fully understood.

24.3 REGIONAL WATER QUALITY CONTROL BOARD

The membrane filtration system will be operated to isolate any racks requiring maintenance, allowing water produced during maintenance / testing to be re-circulated to the forebay for treatment.

However, as discussed in Section 17, Baker WTP will be constructed to discharge water to Serrano Creek in the event of the following failed operation / emergency conditions of:

- Overflow of the forebay (which is only possible if the flow control valve fails open) - Water discharged from the forebay would be a combination of raw water and recirculated treated backwash water.
- Product Water to Waste (if off-specification water from the contact basin could not be returned to the forebay) - Water discharge from the contact basin would be water treated through the membrane filtration that cannot be brought to specification due to a failure of the finished water chemical system. Such water would require dechlorination if discharged to Serrano Creek.

Coordination with the Santa Ana Regional Water Quality Control Board will be necessary to gain approval for discharges to Serrano Creek. Coordination may lead to the requirement of the filing of a *Limited Threat Discharge to Surface Water – Notice of Intent* to be processed with the Santa Ana RWQCB.

24.4 SANTIAGO AQUEDUCT COMMISSION COORDINATION

The Santiago Aqueduct Commission has the governing authority over the Baker Pipeline and owns the property where the Raw Water Pump Station is planned for construction. With the Baker WTP Project each Stakeholder will hold capacity rights in the Baker Pipeline equivalent to their water rights in the Baker WTP.

The only agencies holding capacity rights in the Baker Pipeline initially were Santa Margarita Water District, Trabuco Canyon Water District and Irvine Ranch Water District. As a result, IRWD and RBF Consulting evaluated the total capacity rights in the Baker Pipeline, and developed an approach to reallocating the water rights per the Baker Pipeline Agreement, allowing for each agency to retain or obtain rights equivalent to capacity in the WTP. The reallocation accounted for present worth and maintained overall total value by modifying the capacity to all entities owning capacity rights in the pipeline.

All five (5) reaches of the Baker Pipeline were modified. The revised capacity per reach is:

- Reach 1 = 99.00 cfs
- Reach 2 = 54.78 cfs
- Reach 3 = 50.68 cfs
- Reach 4 = 50.68 cfs
- Reach 5 = 49.50 cfs

IRWD presented the revision to water rights to the Santiago Aqueduct Commission. The Baker Pipeline Agreement is being modified accordingly, including the compensation (for buying or selling capacity) between each of the agencies.

24.5 PERMITTING AND COORDINATION

Table 24.1 provides a summary of permitting and coordination anticipated for the Baker WTP.

Baker WTP
Permit Compliance Plan

Table 24.1

Agency	Permit / Submittal / Request	Processing Time	Prerequisite Data	Items to be Sent	Responsible Party	Critical Project Component
California State Water Resources Control Board (SWRCB)	• Notice of Intent (NOI) - NPDES General Permit for Construction Activity • Spill Prevention Control and Countermeasure (SPCC)	Submit 30 days prior to start of construction	Site Specific Storm Water Pollution Prevention Plan (SWPPP)	• Notice of Intent • Site Map	RBF / Carollo	Site Construction Chemical Storage
California Dept. of Industrial Relations Division of Occupational Health and Safety (CAL-OSHA)	• Excavation Permit • Pressure Vessel Permit	Over the counter.	Contractor ready to begin work.	• Permit Application Form • Copy of updated safety program • Application Fee • Competent Person Letter	Contractor	Construction Safety: Pipeline Trench Confined Space(s)
City of Lake Forest	• Plan Submittal for City review (building permit no required) and transfer to OCFA	2 to 4 weeks	90% Design Plans + Chemical Data	• Required drawings and information for OCFA	RBF / Carollo	OCFA Requirements
East Orange County Water District (EOCWD)	• Encroachment Permit for Raw Water Pump Station	2 to 4 weeks	90% Raw Water Pump Station Design Plans	• Required drawings	RBF / Carollo	Raw Water Pump Station Construction
Irvine Ranch Water District (IRWD)	• Connection Permit	1 month	Location of connection to Serrano Creek sewer pipeline.	• Location of pipeline connection	RBF / Carollo	Backwash waste water system design.
	• Discharge Permit	6 months	Flow rate and water quality data for non-reclaimable waste water.	• Annual flow, BOD, and suspended solids	RBF / Carollo	Non-reclaimable waste water disposal.
Metropolitan Water District (MWD)	• Approval of plans for connection to AMP and Product Water PS surge design. • Encroachment Permit for Raw Water Pump Station	3 months	60% Design Plans for Raw Water and Product Water Pump Station	• Required drawings	Agency	Raw and Product Water Pump Station Construction
Orange County Fire Authority (OCFA)	• Approval of plans by OCFA regarding fire safety provisions	1 month	60% Design Plans + Chemical Data	• Plans must identify fire sprinkler information • Fire Master Plan • Chemical Classifications • Hazardous Materials Plan	RBF / Carollo	Fire Protection Systems: Fire Sprinkler Systems Fire Hydrant Chemical Storage
South Coast Air Quality Management District (SCAQMD)	• Permit to Construct / Operate Form 400-A • Form 400-CEQA • Other Forms (as needed)	3 months	60% +/- Design Plans	• Application • Design Drawings • Emission Control Equipment List • Drawings / Schematics of Equipment • Process Description with rate, emission sources, manuf data, VOCs, equipment location	RBF / Carollo	Grading
State of California Department of Public Health (CDPH)	• Amended Waterworks Permit	6 months	60% +/- Design Plans	• Treated water quality • Treatment Plant operation description • Other information as requested	Agency	WTP Process and Water Quality
Utility Coordination	• Contact for utility information to avoid conflicts.	60 to 90 days	60% +/- Design Plans	• Required drawings showing utilities (horizontal and vertical).	RBF / Carollo	Underground Construction
Utility Owners (Others)	• Encroachment Permits (as applicable).	1 to 2 months	60% +/- Design Plans	• Required drawings showing utilities (horizontal and vertical).	RBF / Carollo	Underground Construction

SECTION 25 SCHEDULE

25.1 OVERVIEW

Construction of the Baker Water Treatment project will be divided into two construction contracts, with a bid package for each.

- Construction Bid Package No. 1 – Raw Water Pump Station and OC-33 Modification
- Construction Bid Package No. 2 – Baker Water Treatment Plant covering all facilities at the Baker site:
    - Flow Control Facility
    - TCWD Pump Station
    - Forebay and Feedwater Pump Station
    - Treatment Building, UV and CT Basin
    - Backwash Wastewater Treatment
    - Yard Piping (w/ connections to Baker Pipeline, 16 MG Res. and AMP)
    - Product Water Pump Station

Table 25.1 provides a summary of the anticipated start and completion dates for the design, bidding, and construction milestones to both construction contracts.

Table 25.1 Baker WTP Project Schedule Summary

Construction Contract/ Milestone	Start Date	Finish Date
Raw Water Pump Station / OC-33 Modf.		
Design	April 2010	March 2011
Bidding & Award	March 2011	May 2011
Construction	June 2011	June 2012
Baker Water Treatment Plant		
Design	April 2010	March 2011
Bidding & Award	March 2011	May 2011
Construction	June 2011	November 2012

25.2 SCHEDULE

The detailed design and construction schedule for Baker WTP is provided as Exhibit 25.1, and construction schedule for the Raw Water Pump Station as Exhibit 25.2.

(This Page Intentionally Left Blank)

BAKER WATER TREATMENT PLANT PROJECT
FINAL DESIGN, BIDDING, AND CONSTRUCTION SCHEDULE
ONSITE BAKER WATER TREATMENT PLANT FACILITIES

Updated April 14, 2010

ID	Task Name	Duration	Start	Finish
1	BAKER FINAL DESIGN KICKOFF	0 days	Thu 4/15/10	Thu 4/15/10
2	Onsite Facilities (Baker WTP and Product Water PS)	717 days	Mon 4/12/10	Tue 1/8/13
3	Prepare Draft Detailed Equipment Lists	5 days	Thu 4/15/10	Wed 4/21/10
4	Review / Finalize Lists with IRWD (Anticipated 3 - 4 Coordination Mtgs)	5 wks	Thu 4/22/10	Wed 5/26/10
5	Geotechnical Investigation	37 days	Thu 4/15/10	Fri 6/4/10
10	Determine NRW Point of Discharge	11 days	Thu 4/15/10	Fri 4/30/10
18	Determine Method for Surface Discharge Disposal	11 days	Thu 4/15/10	Fri 4/30/10
23	Determine Use of Existing Admin Building	22 days	Wed 4/21/10	Thu 5/20/10
30	Site Access	30 days	Mon 4/12/10	Fri 5/21/10
36	Building Architecture	65 days	Thu 4/15/10	Wed 7/14/10
44	Membrane Building Layout (i.e. Space Planning)	46 days	Thu 4/15/10	Thu 6/17/10
51	Chemical Building Layout	30 days	Wed 4/28/10	Tue 6/8/10
57	Flow Control Valve(s) / TCWD Pump Station / Upstream Strainers Design	33 days	Thu 4/15/10	Mon 5/31/10
63	Forebay / ClO2 Contact Basin	25 days	Wed 4/21/10	Tue 5/25/10
69	16 MG Clearwell Modifications	35 days	Wed 4/21/10	Tue 6/8/10
75	Product Water Pump Station	30 days	Thu 4/15/10	Wed 5/26/10
81	MWD Milestones that Impact Onsite Facilities	0 days	Mon 5/31/10	Mon 5/31/10
84	Site Development	0 days	Wed 4/28/10	Wed 4/28/10
87	MF System Design	70 days	Tue 6/1/10	Tue 9/7/10
92	System Integrator Selection	108 days	Wed 4/28/10	Mon 9/27/10
106	Demolition	20 days	Thu 4/15/10	Wed 5/12/10
108	SCE Coordination	76 days	Thu 4/15/10	Fri 7/30/10
111	Interim Drawing Submittal Preparation	47 days	Thu 4/15/10	Fri 6/18/10
112	Demolition Plan	3 wks	Thu 5/13/10	Wed 6/2/10
113	Site Civil	36 days	Fri 4/30/10	Fri 6/18/10
120	Mechanical Plans and Sections	36 days	Wed 4/28/10	Wed 6/16/10
129	Architectural Plans	20 days	Fri 5/21/10	Thu 6/17/10
135	Structural Plans	5 days	Wed 6/9/10	Tue 6/15/10
137	Electrical	10 days	Tue 6/1/10	Mon 6/14/10
140	Instrumentation	40 days	Thu 4/15/10	Wed 6/9/10
142	Interim Drawings Submittal	0 days	Fri 6/18/10	Fri 6/18/10
143	IRWD Review	20 days	Mon 6/21/10	Fri 7/16/10
144	Workshop for RBF/Carollo to Present Design to IRWD and Stakeholders	0 days	Mon 6/28/10	Mon 6/28/10
145	60% Design	100 days	Mon 6/21/10	Fri 11/5/10
229	90% Design	88 days	Mon 9/13/10	Wed 1/12/11
230	Landscape Design	25 days	Mon 9/13/10	Fri 10/15/10
233	Permit Packages Preparation / Assistance	70 days	Mon 9/13/10	Fri 12/17/10
240	90% PS&E Preparation	11.6 wks	Mon 9/13/10	Wed 12/1/10
241	IRWD Review	30 days	Thu 12/2/10	Wed 1/12/11
242	100% Design (Incorporate IRWD Comments)	30 days	Thu 1/13/11	Wed 2/23/11
243	100% PS&E Preparation	20 days	Thu 1/13/11	Wed 2/9/11
244	Final Review (Back-Check) by IRWD	10 days	Thu 2/10/11	Wed 2/23/11
245	Final Design Submittal	4 days	Thu 2/24/11	Tue 3/1/11
246	Bid Phase	75 days	Wed 3/2/11	Tue 6/14/11
247	Bid Packages Assembled and Distribution to Bidders	1 wk	Wed 3/2/11	Tue 3/8/11
248	Pre-Bid Meeting	0 days	Tue 3/15/11	Tue 3/15/11
249	Bid Preparation	5 wks	Tue 3/15/11	Mon 4/18/11
250	Bid Opening	0 days	Tue 4/19/11	Tue 4/19/11
251	Bid Evaluation / Recommendation for Award	8 days	Tue 4/19/11	Thu 4/28/11
252	Stakeholders' GO / NO GO DECISION	7 days	Fri 4/29/11	Mon 5/9/11
253	E&O Committee Meeting	0 days	Tue 5/17/11	Tue 5/17/11
254	Board Meeting	0 days	Mon 5/23/11	Mon 5/23/11
255	IRWD Issues Notice of Award	2 days	Mon 5/23/11	Tue 5/24/11
256	IRWD Issues Notice to Proceed	3 wks	Wed 5/25/11	Tue 6/14/11
257	Construction Phase	410 days	Tue 6/14/11	Tue 1/8/13
258	Pre-Construction Meeting	0 days	Tue 6/14/11	Tue 6/14/11
259	Submittals	60 days	Wed 6/15/11	Tue 9/6/11
260	Construction	17 mons	Wed 6/15/11	Tue 10/2/12
261	Start-up and Testing	2 mons	Wed 10/3/12	Tue 11/27/12
262	Record Drawings	1 mon	Wed 12/12/12	Tue 1/8/13
263	Project Closeout	6 wks	Wed 11/28/12	Tue 1/8/13

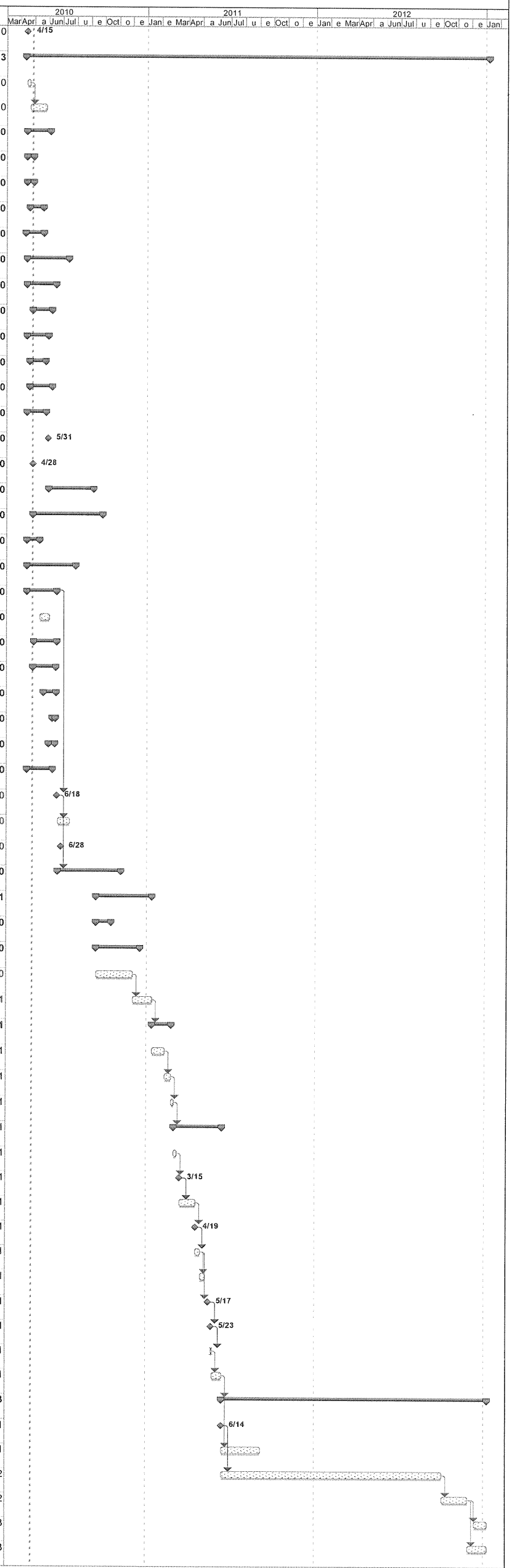

Project: Baker Final Design Schedule_
Date: Mon 4/26/10

Task | Split | Progress | Milestone | Summary | Project Summary | External Tasks | External MileTask | Split

EXHIBIT 25.1

BAKER WATER TREATMENT PLANT PROJECT
FINAL DESIGN, BIDDING, AND CONSTRUCTION SCHEDULE
RAW WATER DELIVERY SYSTEM (OC-33 AND RAW WATER PUMP STATION)

Updated April 14, 2010

ID	Task Name	Duration	Start	Finish
1	**BAKER FINAL DESIGN KICKOFF**	**0 days**	**Thu 4/15/10**	**Thu 4/15/10**
2	**Raw Water Delivery System (OC-33, Raw Water Pump Station)**	**570 days**	**Thu 4/15/10**	**Wed 6/20/12**
3	Prepare Draft Detailed Equipment Lists	15 days	Thu 4/15/10	Wed 5/5/10
4	Review / Finalize Lists with IRWD (Anticipated 2 Coordination Mtgs)	5 wks	Thu 5/6/10	Wed 6/9/10
5	**Verify Raw Water Pump Station Capacity at 53.5 cfs**	**40 days**	**Thu 4/15/10**	**Wed 6/9/10**
6	**Determine Available Capacity in Irvine Lake Pipeline (ILP)**	**40 days**	**Thu 4/15/10**	**Wed 6/9/10**
17	**Coordinate with County of Orange and MWD for Easement Requirements**	**40 days**	**Wed 6/16/10**	**Tue 8/10/10**
21	**Geotechnical Investigation**	**38 days**	**Thu 4/15/10**	**Mon 6/7/10**
26	**MWD Coordination**	**0 days**	**Mon 5/31/10**	**Mon 5/31/10**
28	**Surge Analysis**	**25 days**	**Thu 6/10/10**	**Wed 7/14/10**
30	**Demolition**	**20 days**	**Thu 4/15/10**	**Wed 5/12/10**
32	**SCE Coordination**	**36 days**	**Thu 6/10/10**	**Fri 7/30/10**
33	Finalize Electrical Loads / Provide to SCE	2 wks	Thu 6/10/10	Wed 6/23/10
34	SCE Provides Design Criteria	0 days	Fri 7/30/10	Fri 7/30/10
35	**Pump Station Building Architecture**	**30 days**	**Thu 6/24/10**	**Wed 8/4/10**
41	**Interim Drawing Submittal Preparation**	**10 days**	**Thu 6/10/10**	**Wed 6/23/10**
52	Interim Drawings Submittal	0 days	Wed 6/23/10	Wed 6/23/10
53	IRWD Review	20 days	Thu 6/24/10	Wed 7/21/10
54	**Workshop for RBF/Carollo to Present Design to IRWD and Stakeholders**	**0 days**	**Mon 6/28/10**	**Mon 6/28/10**
55	**Develop Technical Specification Sections and Project Manual**	**40 days**	**Thu 6/10/10**	**Wed 8/4/10**
61	**Plans Preparation - 60% Submittal**	**45 days**	**Thu 7/15/10**	**Wed 9/15/10**
62	**General Sheets**	**3 wks**	**Thu 7/15/10**	**Wed 8/4/10**
63	**Typical Details**	4 wks	Thu 7/15/10	Wed 8/11/10
64	**Civil**	**25 days**	**Wed 8/11/10**	**Tue 9/14/10**
71	**Mechanical Plans, Sections, and Details**	7 wks	Thu 7/15/10	Wed 9/1/10
72	**Architectural Floor Plan, Elevations, Roof Plan, Details and Schedules**	4 wks	Thu 8/19/10	Wed 9/15/10
73	**Structural Details**	3 wks	Thu 8/26/10	Wed 9/15/10
74	**Electrical**	6 wks	Thu 8/5/10	Wed 9/15/10
75	**Instrumentation**	3 wks	Thu 7/15/10	Wed 8/4/10
76	IRWD Project Manual Preparation	5 wks	Thu 7/29/10	Wed 9/1/10
77	Construction Cost Estimate Update	7 wks	Mon 7/26/10	Fri 9/10/10
78	60% Submittal	0 days	Wed 9/15/10	Wed 9/15/10
79	IRWD Review	20 days	Thu 9/16/10	Wed 10/13/10
80	**90% Design**	**70 days**	**Thu 10/14/10**	**Wed 1/19/11**
81	**Permit Packages Preparation / Assistance**	**20 days**	**Mon 11/22/10**	**Fri 12/17/10**
82	OCFA	1 mon	Mon 11/22/10	Fri 12/17/10
83	90% PS&E Preparation	8 wks	Thu 10/14/10	Wed 12/8/10
84	IRWD Review	30 days	Thu 12/9/10	Wed 1/19/11
85	**100% Design (Incorporate IRWD Comments)**	**25 days**	**Thu 1/20/11**	**Wed 2/23/11**
86	100% PS&E Preparation	15 days	Thu 1/20/11	Wed 2/9/11
87	Final Review (Back-Check) by IRWD	10 days	Thu 2/10/11	Wed 2/23/11
88	Final Design Submittal	4 days	Thu 2/24/11	Tue 3/1/11
89	**Bid Phase**	**75 days**	**Wed 3/2/11**	**Tue 6/14/11**
90	Bid Packages Assembled and Distribution to Bidders	1 wk	Wed 3/2/11	Tue 3/8/11
91	Pre-Bid Meeting	0 days	Tue 3/22/11	Tue 3/22/11
92	Bid Preparation	4 wks	Tue 3/22/11	Mon 4/18/11
93	Bid Opening	0 days	Tue 4/19/11	Tue 4/19/11
94	Bid Evaluation / Recommendation for Award	5 days	Tue 4/19/11	Mon 4/25/11
95	E&O Committee Meeting	0 days	Tue 5/17/11	Tue 5/17/11
96	Board Meeting	0 days	Mon 5/23/11	Mon 5/23/11
97	IRWD Issues Notice of Award	2 days	Mon 5/23/11	Tue 5/24/11
98	IRWD Issues Notice to Proceed	3 wks	Wed 5/25/11	Tue 6/14/11
99	**Construction Phase**	**266 days**	**Wed 6/15/11**	**Wed 6/20/12**
100	Pre-Construction Meeting	0 days	Thu 6/16/11	Thu 6/16/11
101	Submittals	6 wks	Wed 6/15/11	Tue 7/26/11
102	Construction	12 mons	Thu 6/16/11	Wed 5/16/12
103	Start-up and Testing	3 wks	Thu 5/17/12	Wed 6/6/12
104	Record Drawings	1 mon	Thu 5/24/12	Wed 6/20/12
105	Project Closeout	2 wks	Thu 6/7/12	Wed 6/20/12

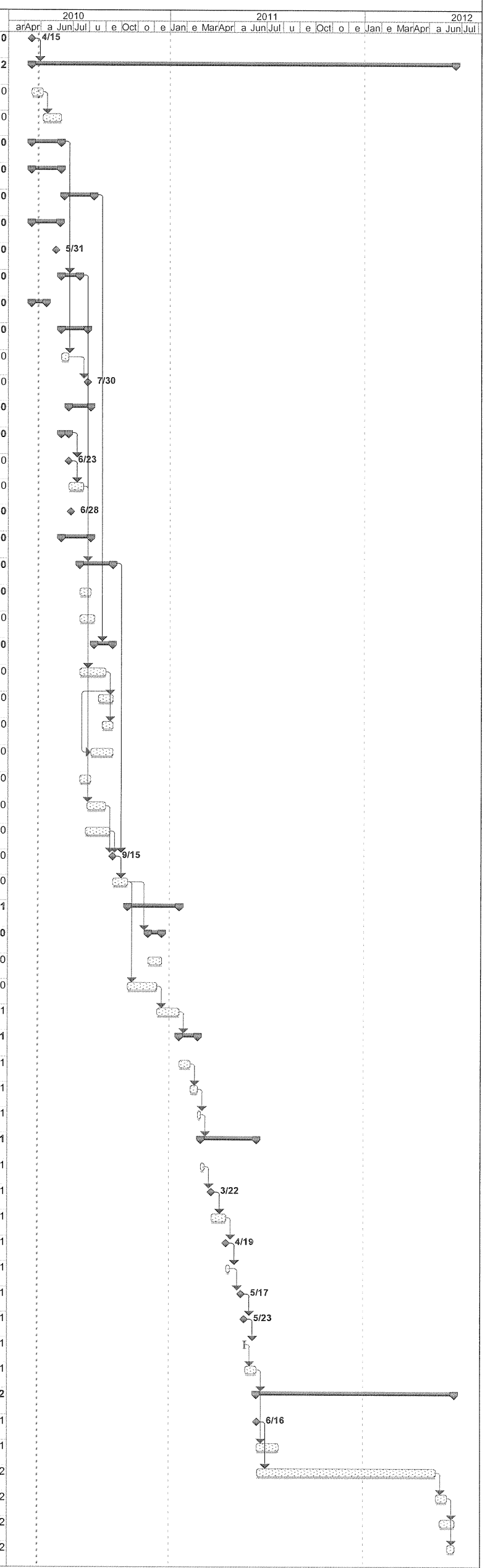

Project: Exhibit 25.2.mpp
Date: Mon 4/26/10

Task | Split | Progress | Milestone | Summary | Project Summary | External Tasks | External MileTask | Split

EXHIBIT 25.2

APPENDIX A

Well No. 1 Memorandum

Project Coordination

To: Irvine Ranch Water District - Engineering **JN:** 10-106232

From: Cindy Miller - RBF; Jim Meyerhofer, Vincent Roquebert, Dan Hugaboom - Carollo

Date: September 3, 2009

Re: Baker Water Treatment Plant – Well No. 1

PURPOSE

The purpose of this memorandum is to provide the IRWD alternatives and a recommendation for utilizing water produced from Well No. 1 in the proposed water process for the Baker WTP. Well No. 1 is located adjacent to the Baker WTP and is currently piped to discharge into a well tank located on the Baker WTP site.

REFERENCES

Information for this memorandum was obtained from the following sources:

- Groundwater Supply Evaluation for the Los Alisos System (Boyle Engineering Corporation, December 2002)
- Baker WTP Preliminary Design Memorandums (RBF/Carollo, 2009)

BACKGROUND

IRWD owns a well adjacent to the Baker WTP site. Based on the available information this well is operated at approximately 200 gallons per minute (gpm) or 322 acre.ft/year. If included in the treatment process this well would increase plant output by 1.1%.

The Boyle report indicates that a pump pedestal and waste line need to be added to Well No. 1 in order to comply with criteria for a potable water well. Assuming the appropriate upgrades are made to make the well suitable for potable water use, the primary issue with its use at the Baker WTP is water quality. Well water quality most relevant to the purpose of this memorandum is summarized in Table 1 below.

Well No.1 exceeds potable water standards (at times) for iron, manganese, arsenic, TDS, and turbidity. Alternatives for managing these constituents involve blending with process flows at the Baker WTP. At minimum plant flows (assumed to be 10 mgd of raw water), Well No. 1 is diluted at a ratio of 35:1. At peak plant flows dilution is increased to 87:1. Dilution eliminates water quality concerns for all of these constituents without additional treatment, with the exception of turbidity. Treatment requirements would be limited to virus disinfection, which can be accomplished in the CT basin proposed for the main treatment process.

The Boyle report indicates that rehabilitation activities were performed on Well No. 1 to eliminate silting. It is unclear from the report if and by how much well water turbidity has decreased. However, it is assumed in this memorandum that well water turbidity has been reduced to a more typical value 0.5 NTU.

Table 1 Well No. 1 Water Quality[1]

Constituent	Potable Water Standard	Range (mg/L)	Average (mg/L)
Total Hardness	None	189 - 500	390
Total Alkalinity	None	225 - 268	240
pH	SMCL = 6.5 to 8.5	6.7 - 7.6	7.3
Total Dissolved Solids (TDS)	SMCL = 500 mg/L	600 - 950	710
Turbidity	<0.3 NTU 95% of the time	1.1 - 7.5	4.6
Arsenic	MCL = 0.010 mg/L	ND - 0.012	0.007
Iron	SMCL = 0.3 mg/L	ND - 2.96	0.6
Manganese[2]	SMCL = 0.050 mg/L	ND - 0.07	0.044

Note:
1. Based on annual water quality data presented in Boyle (December 2002) from 1989 to 2001.

ALTERNATIVES FOR INCLUSION OF WELL NO. 1

The following treatment alternatives have been developed to manage turbidity from Well No. 1. Other constituents of interest in Well No.1 will be managed through dilution into the main process stream. Alternatives are summarized in Table 2.

Blending into the Membrane Waste Washwater (MFWW) Equalization Basin

In this alternative, well water is pumped into the membrane waste washwater (MFWW) equalization basin, transferred to the clarification process, and ultimately introduced into the raw water pipeline. This eliminates any concerns about silt (turbidity) in Well No. 1 impacting finished water quality or membrane performance. In addition, turbidity peaks associated with well cycling could be handled in the clarification process, eliminating the need for a dedicated well to waste system. Blending in this manner will not impact the treatment process selection, equipment, or pipeline sizing for the Baker WTP. Finished water quality is not impacted.

This alternative would require construction of a pipeline from nearby the existing well tank on the Baker WTP site to the MFWW equalization basin, associated valving and controls. These improvements are depicted in Figure 1.

Blending with Finished Water at the CT Basin

In this alternative, well water is pumped into the CT basin and blended with membrane permeate from the Baker WTP prior to disinfection. This would allow the water to be disinfected in the CT basin proposed for the main process stream. In order to for this alternative to be viable, it must be confirmed that Well No. 1

rehabilitation activities have lowered turbidity to more typical well turbidity levels (less than 0.5 NTU). Assuming a well water turbidity of 0.5 NTU, finished water turbidity would be expected to increase by 33% to 100% (up to 0.020 NTU to 0.030 NTU) depending on the Baker WTP flow rates. This alternative eliminates any risk of MF system fouling from well water manganese or iron.

This alternative would include construction of a pipeline from nearby the existing well tank on the Baker WTP to the CT basin, a well to waste pipeline to the proposed MFWW equalization basin, associated valving and controls. The well to waste pipeline would be used to mitigate any turbidity peaks associated with pump start up. These improvements are depicted in Figure 2.

Table 2 Alternatives for Using Well No. 1 Water at the Baker WTP

Alternative	Pros	Cons
Blend into MFWW Equalization Basin	• No measurable impact to finished water quality • No impact to process selection/sizing • Turbidity removal with minimal additional capital cost (pipeline only) • No new residuals stream • No well to waste line required	• Risk (minimal) of impacting MF performance from additional iron and manganese load.
Blend Directly into CT Basin Inlet	• Eliminates possible impacts to membrane system performance • No new residuals stream	• Increases finished water turbidity from 0.015 NTU to 0.020 NTU to 0.030 NTU at low Baker WTP flows

CONCLUSIONS

- Well No. 1 is suitable for blending into the CT basin at the Baker WTP without violating any primary or secondary MCLs.
- At assumed well turbidity of 0.5 NTU and minimum Baker WTP flows, direct blending of Well No. 1 into the CT basin is expected to increase finished water turbidity from 0.015 NTU to 0.020 NTU. At minimum plant flows, blended turbidity could reach 0.03 NTU. This approach would require construction of both a blend line and a well to waste line.
- Well No. 1 could be blended into the MFWW equalization basin to utilize clarification and filtration facilities proposed for the Baker WTP to manage turbidity from Well No 1. This approach eliminates impacts to plant finished water quality from Well No. 1 and requires only one pipeline to be constructed.

RECOMMENDATIONS

It is recommended that Well No. 1 be blended into the MFWW equalization basin if it is to be used as a supply source for the Baker WTP.

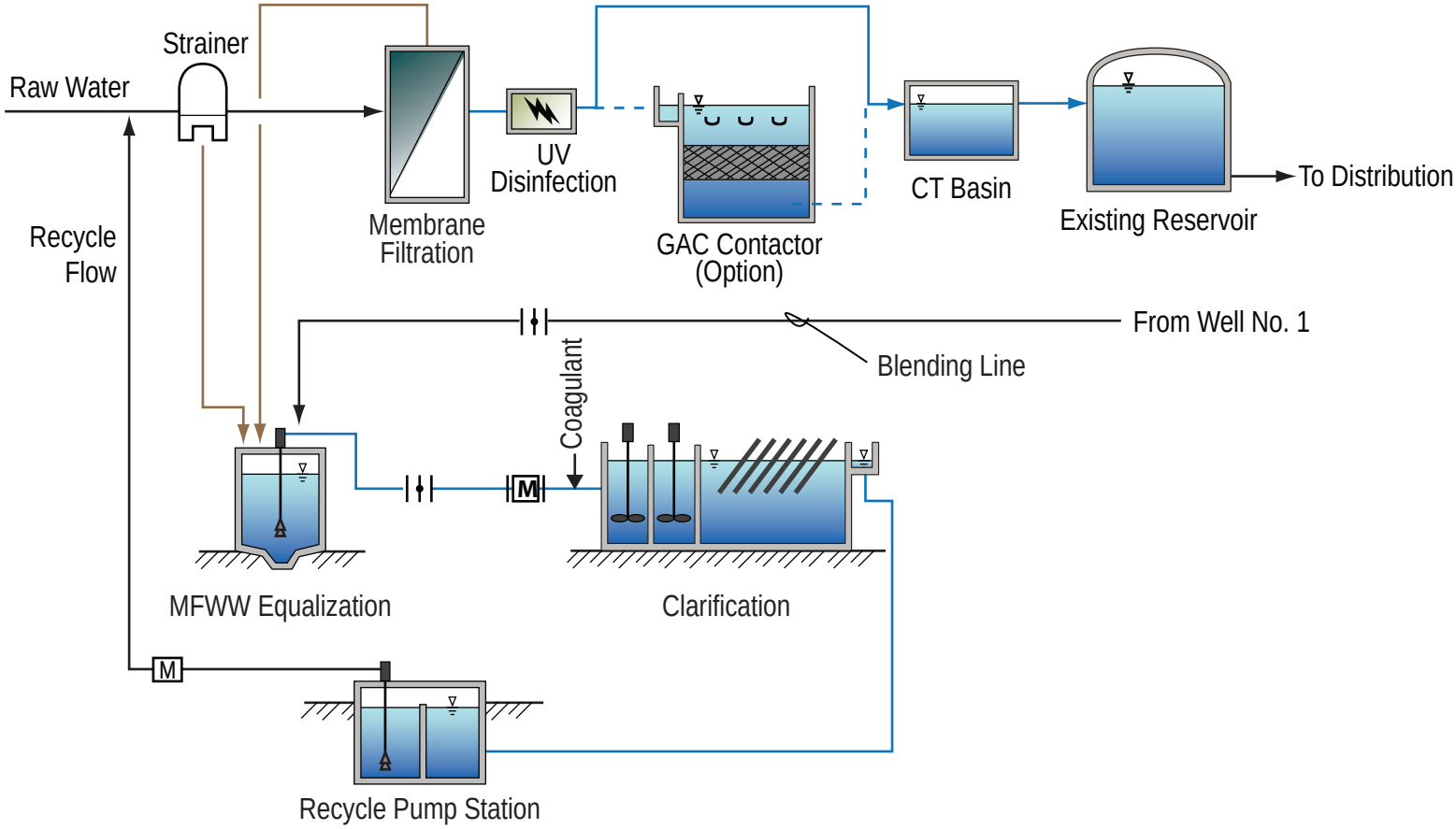

Figure 1
Well No. 1 MFWW Equalization Basin Blending Alternative
IRWD

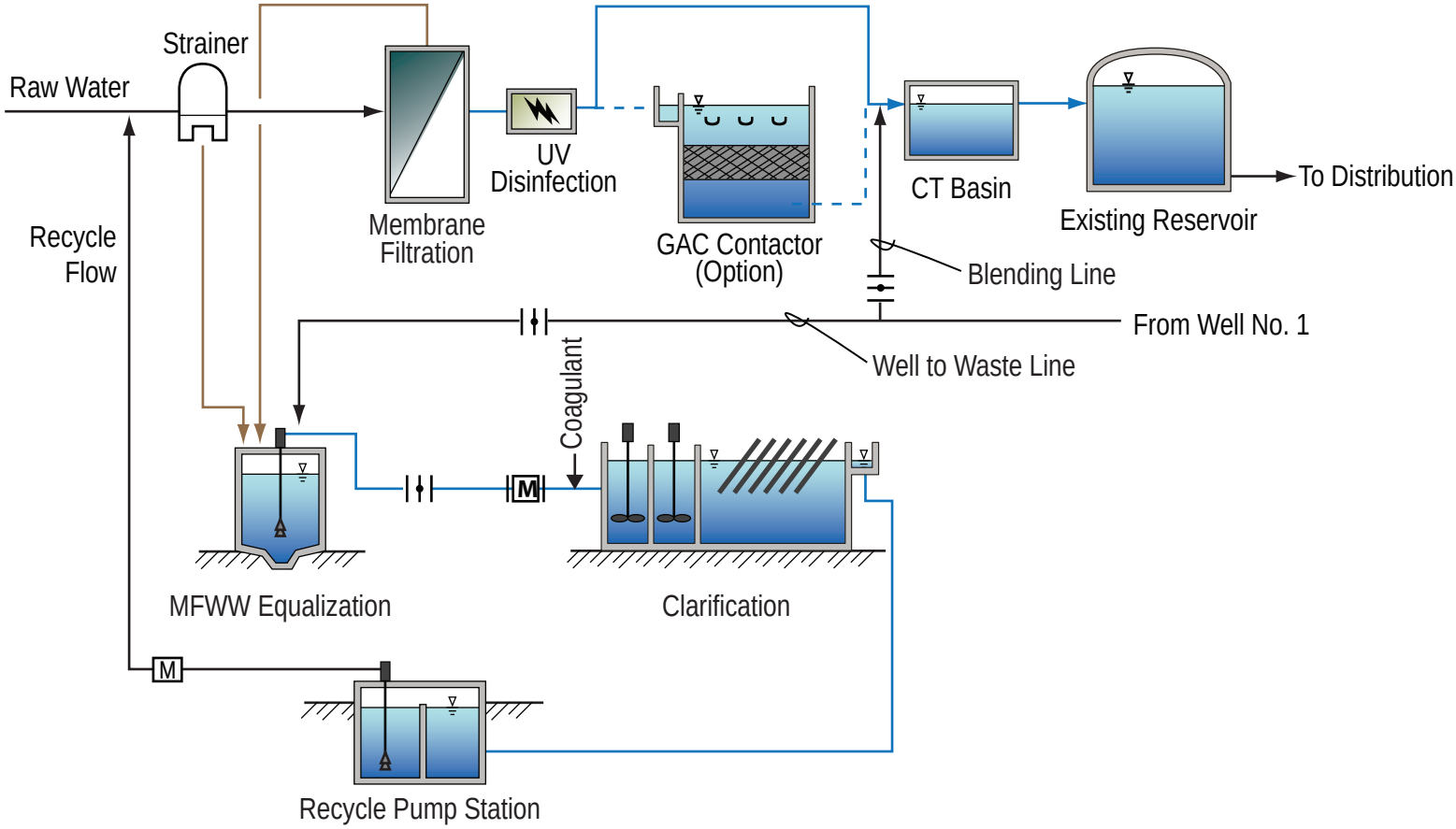

Figure 2
Well No. 1 CT Basin Blending Alternative
IRWD

APPENDIX B

Baker Pipeline Flow Test – Results / Calculations

TABLE B1
BAKER PIPELINE FLOW TEST
FLOW TEST SUMMARY

DATA LOGGING LOCATION	Parameter	STEP																																	
		0	1	2	3	4	5	6	7	8	9	10	11	12	13	14	15	16	17	18	19	20	21	22	23	24	25	26	27	28	29	30	31	32
		TIME OF TEST (Minutes)																																	
		0	5	10	15	20	25	30	35	40	45	50	55	60	65	70	75	80	85	90	95	100	105	110	115	120	125	130	135	140	145 [1]	150	155	160
		9:00 AM	9:05 AM	9:10 AM	9:15 AM	9:20 AM	9:25 AM	9:30 AM	9:35 AM	9:40 AM	9:45 AM	9:50 AM	9:55 AM	10:00 AM	10:05 AM	10:10 AM	10:15 AM	10:20 AM	10:25 AM	10:30 AM	10:35 AM	10:40 AM	10:45 AM	10:50 AM	10:55 AM	11:00 AM	11:05 AM	11:10 AM	11:15 AM	11:20 AM	11:25 AM	11:30 AM	11:35 AM	11:40 AM
SANTIAGO LATERAL																																			
OC-33 IRWD Flow Reading	**Flow (cfs)**	4.29	3.75	4.08	4.56	4.02	9.62	9.28	15.94	16.01	24.6	23.8	23.8	29.66	35.28	37.42	37.61	39.23	39.4	39.83	39.83	39.83	39.83	39.82	39.82	39.82	39.82	30.29	17.81	14.16	*10*	7.63	3.94	
OC-33 MWD Flow Reading	**Flow (cfs)**	3.17	4.06	-	3.96	-	9.50	9.40	15.42	15.72	-	30.13	-	30.71	35.20	37.42	-	39.46	39.26	40.00	40.00	40.00	40.00	40.00	40.00	40.00	38.10	28.87	15.05	11.25	6.09	5.21	4.06	
B01 Pressure Reading	**Pressure (psi)**	48	48	51	51	51	50	50	50	49.5	49.5	49	49	48.5	48	48	48	48	48	48	47.5	47.5	47.5	47.5	47.5	47.5	48	49	50	50	*51*	51	51	
Centerline Elev = 717'	**HGL (ft)**	830.9	830.9	837.8	837.8	837.8	835.5	835.5	835.5	834.3	834.3	833.2	833.2	832.0	830.9	830.9	830.9	830.9	830.9	830.9	829.7	829.7	829.7	829.7	829.7	829.7	830.9	833.2	835.5	835.5	*837.8*	837.8	837.8	
BAKER PIPELINE																																			
EOCWD FCF @ Sta 370+00	**Pressure (psi)**	104	104	105	105	105	103	100	102	102	101	100	100	100	100	99	99	99	99	99	99	99	99	99	99	99	99	100	100	101	102	103		
Gage Elev = 600'	**HGL (ft)**	840.2	840.2	842.6	842.6	842.6	837.9	831.0	835.6	835.6	833.3	831.0	831.0	831.0	831.0	828.7	828.7	828.7	828.7	828.7	828.7	828.7	828.7	828.7	828.7	828.7	828.7	831.0	831.0	833.3	835.6	837.9		
B47 4"AVAR @ Sta 597+81	**Pressure (psi)**	50	52	52	51	52	50	50	48	48	45	45	42	41	38	38	37	37	36	34	34	34	33	32	32	32	36	41	47	50	50	52	52	
Gage Elev = 715'	**HGL (ft)**	830.5	835.1	835.1	832.8	835.1	830.5	830.5	825.9	825.9	819.0	819.0	812.0	809.7	802.8	802.8	800.5	800.5	798.2	793.5	793.5	793.5	791.2	788.9	788.9	788.9	798.2	809.7	823.6	830.5	830.5	835.1	835.1	
B90 3" AV @ Sta 900+62	**Pressure (psi)**	83	83	83	83	80	80	77	77	70	70	64	64	57	57	54	54	52	52	50	50	47	47	46	46	50	58	63	76	78	78	78	78	83
Gage Elev = 655'	**HGL (ft)**	846.7	846.7	846.7	846.7	839.8	839.8	832.9	832.9	816.7	816.7	802.8	802.8	786.7	786.7	779.7	779.7	775.1	775.1	770.5	770.5	763.6	763.6	761.3	761.3	770.5	789.0	800.5	830.6	835.2	835.2	835.2	835.2	846.7
TCWD - Pressure Readings	**Pressure (psi)**					74		72	67			62		57				47		46			42	40		39								
Gage Elev = 665.5'	**HGL (ft)**					836.4		831.8	820.3			808.7		797.2				774.1		771.8			762.5	757.9		755.6								
Baker WTP (Exist Contr Panel)	**Pressure (psi)**	90.93	88.58	89.3	89.16	89.06	85.3	85.8	79.3	81.4	72.9	72.6	62.5	62.61	52.71	52.62	48.5	48.4	44.78	45.17	41.84	42.04	38.9	39	36.25	36.25	46.05	65.84	62.31	86.62	89.95	89.36		
Gage Elev = 636'	**HGL (ft)**	846.0	840.6	842.3	842.0	841.7	833.0	834.2	819.2	824.0	804.4	803.7	780.4	780.6	757.8	757.6	748.0	747.8	739.4	740.3	732.7	733.1	725.9	726.1	719.7	719.7	742.4	788.1	779.9	836.1	843.8	842.4		
24-inch Lateral @ 18-inch conn.	**Pressure (psi)**	107	107	107	106	98	103	103	98	98	90	78	78	68	68	64	64	58	58	56	56	52	52	50	50	58	58	62	78	94	102	108		
Gage Elev = 597'	**HGL (ft)**	844.2	844.2	844.2	841.9	823.4	834.9	834.9	823.4	823.4	804.9	777.2	777.2	754.1	754.1	744.8	744.8	731.0	731.0	726.4	726.4	717.1	717.1	712.5	712.5	731.0	731.0	740.2	777.2	814.1	832.6	846.5		
18-inch Line to 2.0 MG Clearwell	**Flow (cfs)**	0	0	0	0	4.5	5.8	6.6	10.7	15.2	17.9	22.2	23.5	27.3	28.8	30	31.5	32.2	33.4	34.0	34.9	35.6	36.0	36.9	35.0	33.3	25.5	24.3	8.8	6.2	2.3	0.0		
2.0 MG Reservoir (East)	**Pressure (psi)**	0	0	0	0	0	0	0	1	1	3	7	8	8	13	15	15	17	17	18	18	20	20	22	22	22	14	14	6	5	5	4		
Gage Elev = 599'	**HGL (ft)**	602.2	602.4	602.6	602.8	602.9	603.5	603.8	604.4	605.8	606.8	608.2	609.0	609.4	609.2	608.7	611.9	611.5	614.2	611.2	612.0	612.2	614.8	619.1	622.0	624.8	629.1	629.9	630.5	629.9	629.4	627.9	627.0	624.9
	WSL(ft)	1.39	1.47	1.56	1.63	1.68	1.95	2.07	2.33	2.95	3.39	3.97	4.35	4.49	4.4	4.18	5.58	5.41	6.58	5.26	5.64	5.7	6.82	8.69	9.97	11.19	13.04	13.38	13.62	13.38	13.17	12.49	12.13	11.2
2.0 MG Reservoir (West)	**HGL (ft)**	603.6	603.6	603.6	603.7	603.6	603.7	603.7	603.8	603.9	604.0	604.2	604.2	604.4	604.5	604.8	605.0	605.3	605.5	605.6	606.0	606.4	607.1	607.6	608.0	608.4	609.7	610.1	610.6	611.6	612.1	613.9	613.5	614.6
	WSL(ft)	2.01	2.01	2.01	2.03	2.01	2.05	2.05	2.06	2.12	2.17	2.23	2.25	2.32	2.39	2.49	2.59	2.73	2.8	2.85	3.04	3.19	3.51	3.74	3.89	4.06	4.64	4.79	5.02	5.46	5.68	6.43	6.28	6.77

[1] OC-33 flow reading was not available. Interpolation was used to determine flow and pressure for use in subsequent figures and analysis.

Exhibit B1
Baker Flow Test (HGL per Time)

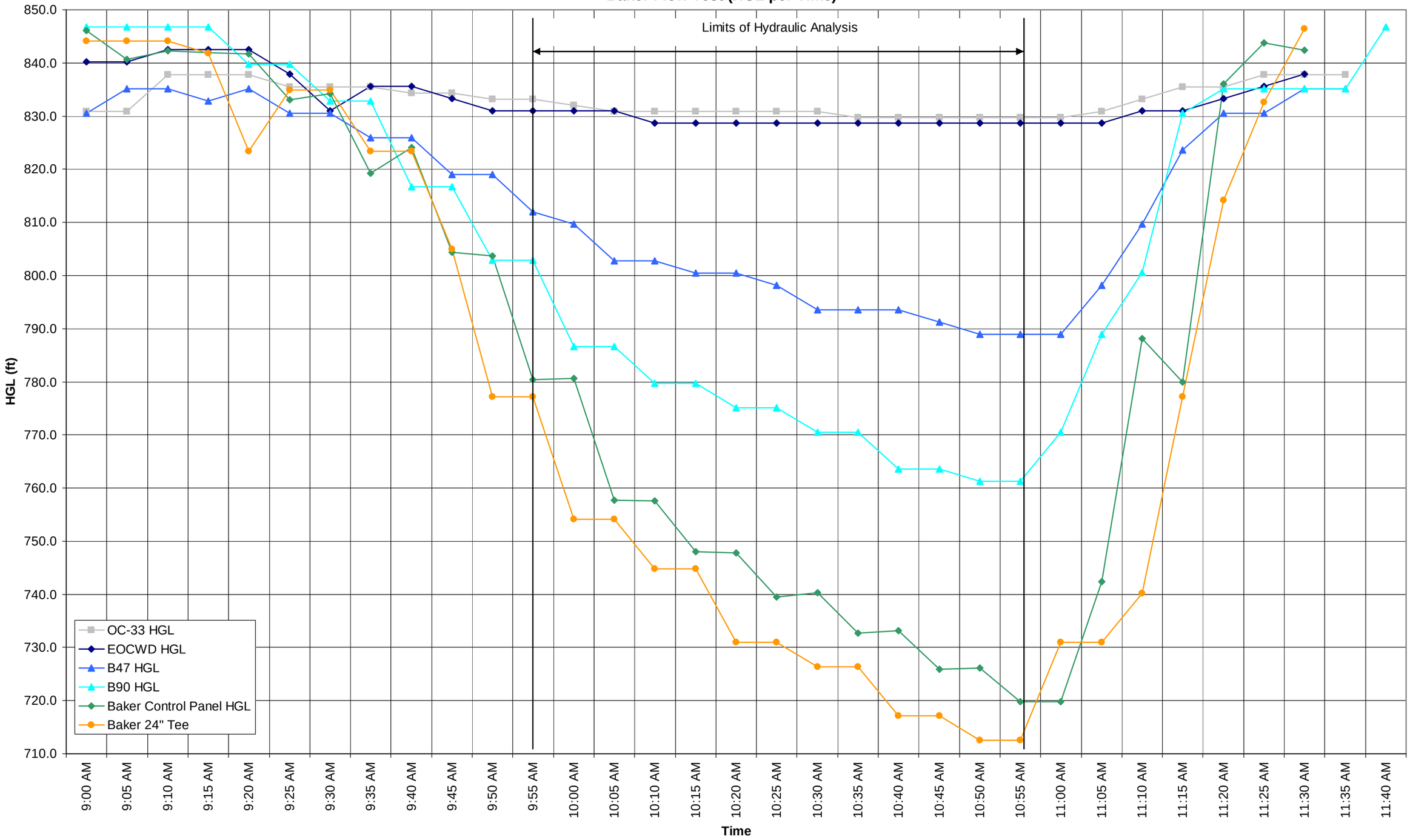

Exhibit B2
Hazen Williams 'C' Value Determination from Results

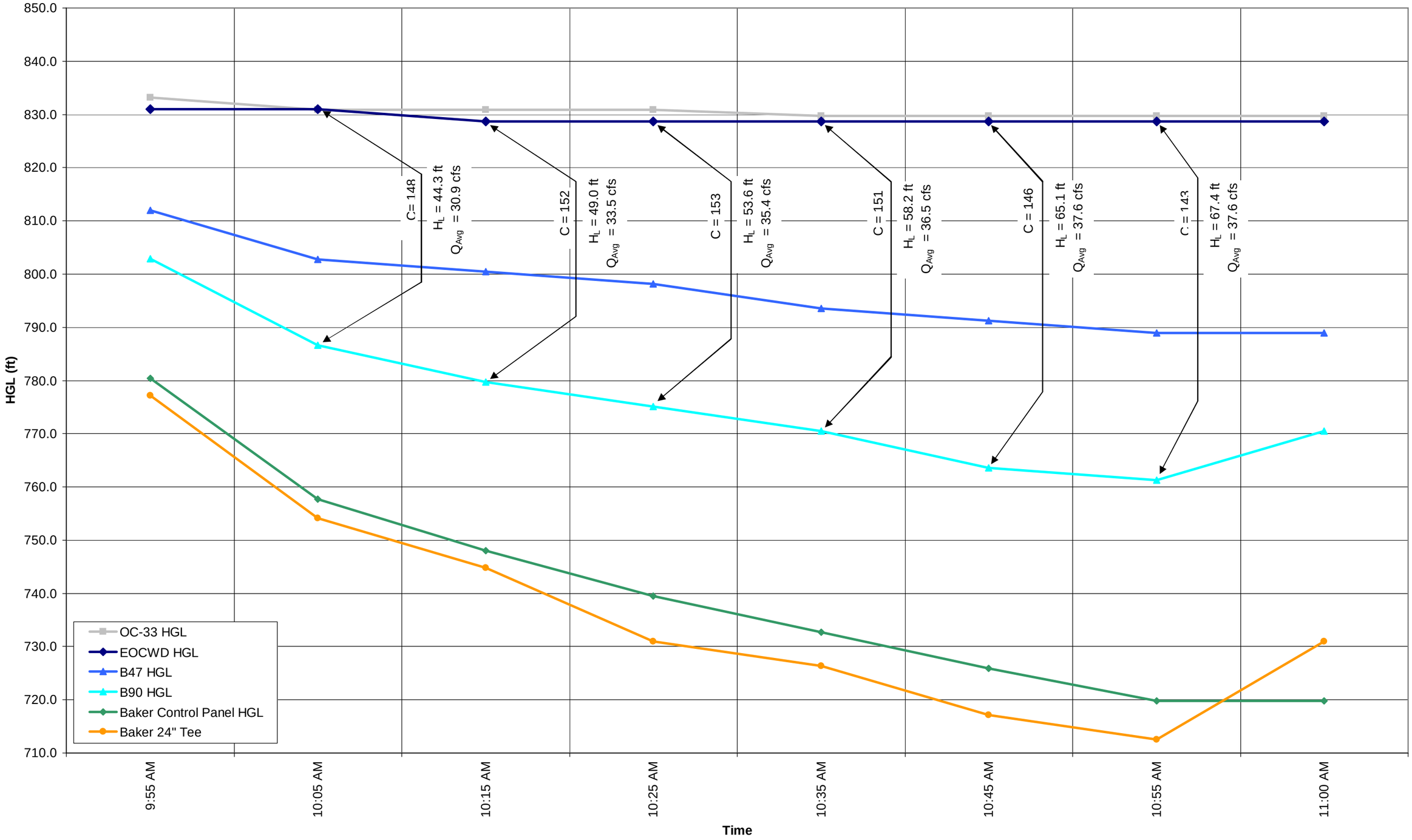

APPENDIX C

Raw Water Conveyance Facilities Previously Considered

FACILITIES CONSIDERED PREVIOUSLY

Hydraulic Control Structure

The Santiago Lateral and the Baker Pipeline have a combined length of approximately nineteen miles, beginning at the Lower Feeder and terminating at the Baker Water Treatment Plant. The Baker Pipeline, itself, traverses twelve miles of undulating terrain from its connection to the Santiago Lateral to the Baker WTP. These existing facilities provide the system backbone that make the steady-state delivery of water to the WTP possible. However, it is the long lengths of these facilities, particularly the Baker Pipeline, that could make the control of flow to the plant a challenge.

Slight variations in demand, at the treatment plant, will produce swings in the hydraulic grade line along the length of the Baker pipeline. These variations in demand will then become translated into rejection, to Irvine Lake, of a portion of the water delivered by MWD, through the Santiago Lateral, to OC-33. Any instantaneous reduction in demand at the plant raises the HGL at OC-33 and when the HGL exceeds 832' water is spilled to Irvine Lake. This condition arises because of the profile of the Santiago Lateral. Immediately downstream of OC-33 is a high point in the pipeline that limits the HGL at OC-33 to about 832', except when water is discharged to the lake, a maximum HGL elevation of 872' can be realized at OC-33. In order to counter this effect, as well as to provide for a greater HGL at OC-33 that would allow the development of greater capacity, in the pipeline and the WTP, IRWD proposed to MWD, the construction of a hydraulic control structure, at the high point in the Santiago Lateral downstream of OC-33.

This facility would:

- reduce variations in the HGL at OC-33
- dampen variations of flow in the Baker Pipeline
- eliminate unintended flows to Irvine Lake

To date, MWD staff has held an opposed stance toward the proposal.

Regulating Reservoir

Without free-water-surface storage, at the head of the Baker pipeline, alternative means of regulating the flow and mitigating operational spikes in the HGL, at OC-33, in the Santiago Lateral, as well as along the Baker Pipeline, have been considered. Unfortunately, a regulating tank on the Baker pipeline near OC-33 is impossible to site, because of topographical constraints (no locations with sufficient elevation) in the vicinity of the turnout. However, between OC-33 and the plant, there are two locations that have been considered for a regulating tank:

- near Peters Canyon reservoir in the vicinity of the raw water pump station
- near Orchard Hills development

At both of the locations the regulating tanks would have to intercept the HGL approximately at their mid-height. The approximate ranges in the HGL at these locations are:

- Peters Canyon – 872' to 818' +/-
- Orchard Hills – 872' to 750+/-

In order to be effective over the possible ranges in the water surface levels, in the tanks, their heights would be about 54' and 112', respectively. As a practical matter, the tanks would be sized to operate over a band width of water surface levels of about 30', thereby allowing equal volumes of storage above (15') and below (15') the most likely HGL at normal operating downstream demand. The capacity of the tank, at either location, would be on the order of two million gallons. When pumping, from Irvine Lake, this volume would provide about one hour of storage, for plant operation, during a power failure at the pump station. During gravity flow condition, from the Santiago Lateral, this volume would allow about one hour of continued delivery of water through OC-33, in the event of a treatment plant shutdown, without discharging to Irvine Lake.

Balancing and Constant-Head Tanks

For the purposes of this report, these terms are defined as follows:

- Constant Head Tank – Storage that includes no volume for plant flow variation
- Balancing Tank – Storage that has sufficient volume to accommodate all variations in plant flow

In addition to dealing with major flow adjustments, due to the unforeseen shutdown of either the pump station or the water treatment plant, instantaneous flow variations of short duration can be part of the normal plant operation. Depending on the number of filter racks, and the frequency of backwash and cleanings, these variations in flow may run from 25 to 45 cfs, for a few minutes at a time, several times per day, as well as fluctuations, of lesser magnitude, several times per hour. Since the capacity of the pipeline is below the possible upper flow demand of the plant, operational storage, near the plant, is required in order to provide a mechanism for supplying supplemental water, during peaking, and for storing water during low plant demand.

APPENDIX D

OC-33 Construction Plans

FORM NO. 39-1 1M 11-60 P.O. 92276

SPECIFICATIONS No. SHEET No.

B.M. Chiseled "x" on rim of manhole riser at station 348+45.82 M.W.D El. 703.385

B.M. Fd. 2" IP plug and nail marked "Aerial Control Inc., Monterey Park, Calif. 63. A" (170 N.E. of station 349+80) M.W.D. El. 789.47. Boyle Engr. Co. El. 789.7

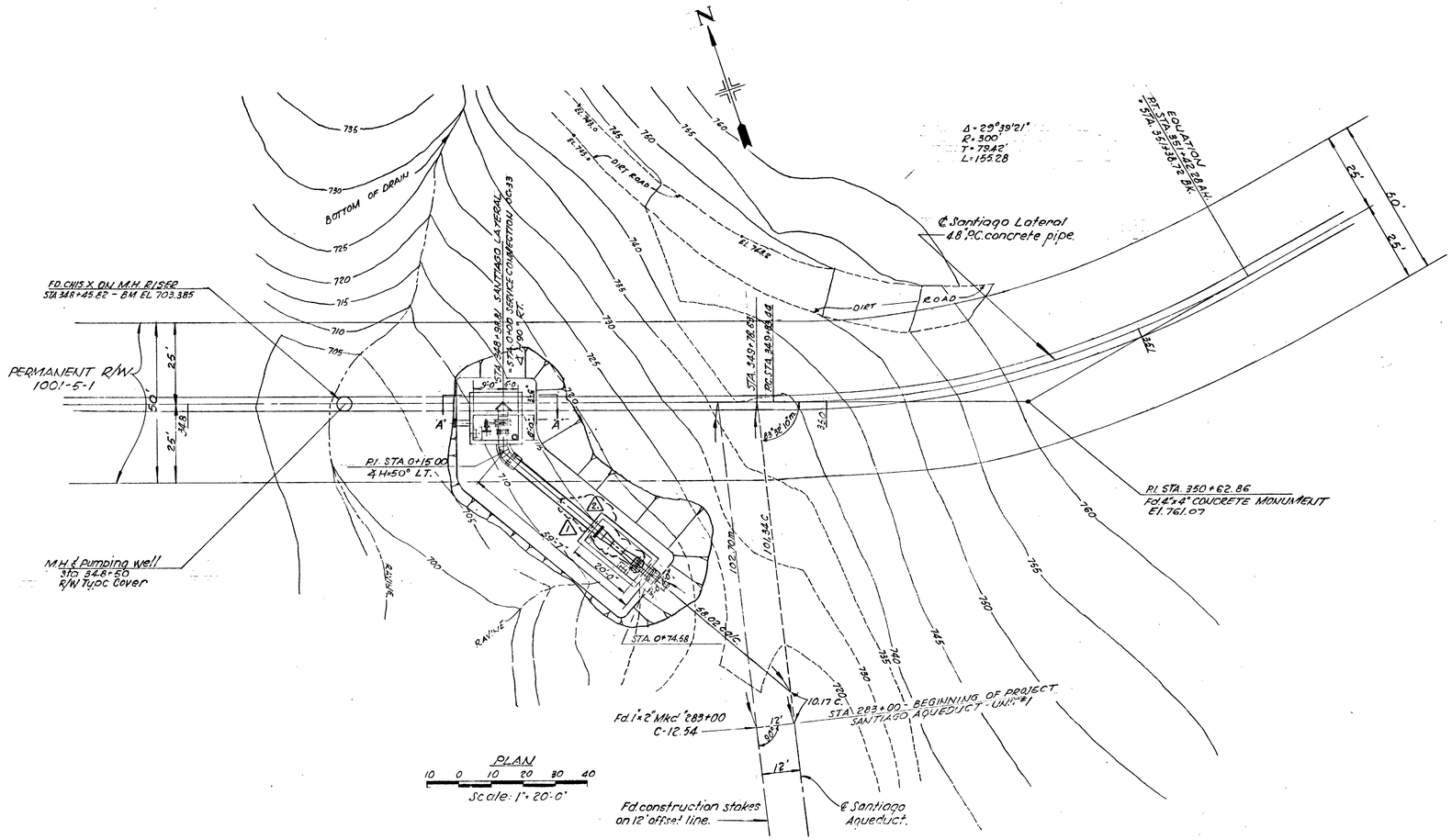

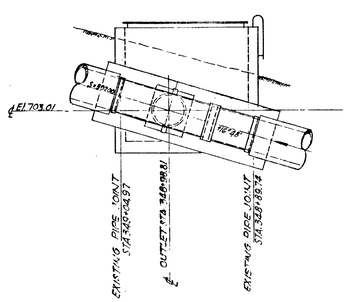

SECTION "A-A"

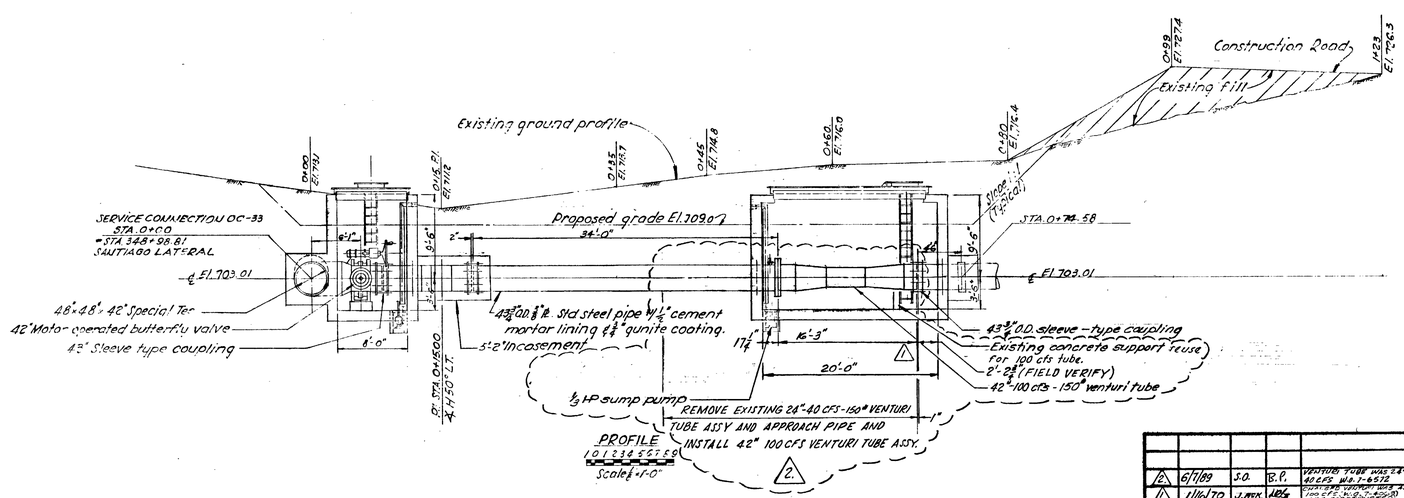

REFERENCE DRAWINGS

B-10652 PLAN AND PROFILE
B-18648 PIPING, VALVE AND METER ARRANGEMENT
B-18698 STEEL PLATE COVER & FRAME DETAIL - T/O.
B-18699 " " " " " -METER
C-9931 ITEMS REQUIRED FOR INSTALLATION
C-9932 MATERIALS REQUIRED
C-9933 " ORDERED
B-17779 WELDED STEEL PIPE
B-17786 STRUCTURAL DETAILS
C-9264 REINFORCED STEEL LIST
B-9257 ELECTRICAL ARRANGEMENT
C-9791 ELECTRICAL MATERIALS
B-18698 FRAME & COVER DETAILS T/O
B-18699 FRAME & COVER DETAILS, METER
△ C-11649 FABRICATED REDUCER

IN THE COUNTY OF ORANGE

THE METROPOLITAN WATER DISTRICT OF SOUTHERN CALIFORNIA

COLORADO RIVER AQUEDUCT DISTRIBUTION SYSTEM
SANTIAGO LATERAL
STATION 348+98.81
SERVICE CONNECTION OC-33
FOR SANTIAGO AQUEDUCT COMMISSION
ORANGE COUNTY M.W.D
GENERAL LAYOUT

No.	DATE	DWN.	CKD.	REVISION	REC.	APP.
2	6/1/89	S.O.	B.P.	VENTURI TUBE WAS 24"-40 CFS No. T-6572		
1	11/16/70	J.MCK.	RDG	CONTRACT CHANGE NO. 2 - 42" 100 CFS VENTURI TUBE ADDED		

DRAWN ---- RECOMMENDED ----
TRACED ---- APPROVED ----
CHECKED ----

W.O. 3239-D LOS ANGELES B-18641

NON-PORT PAPER-CLOTH 1068
FEB 5 1970
MAR 27 1980
OCT 14 1993

FORM NO. 39-1 1M 11-60 P.O. 92276

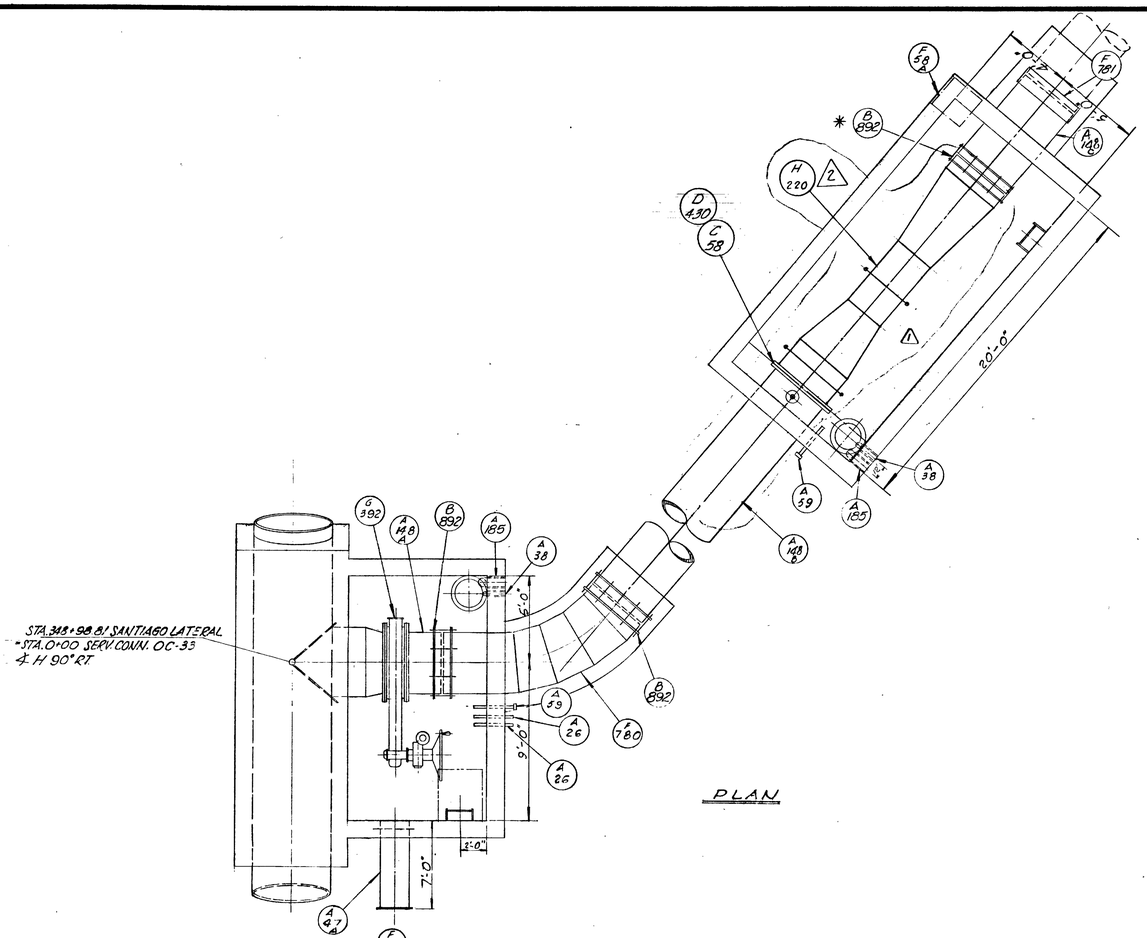

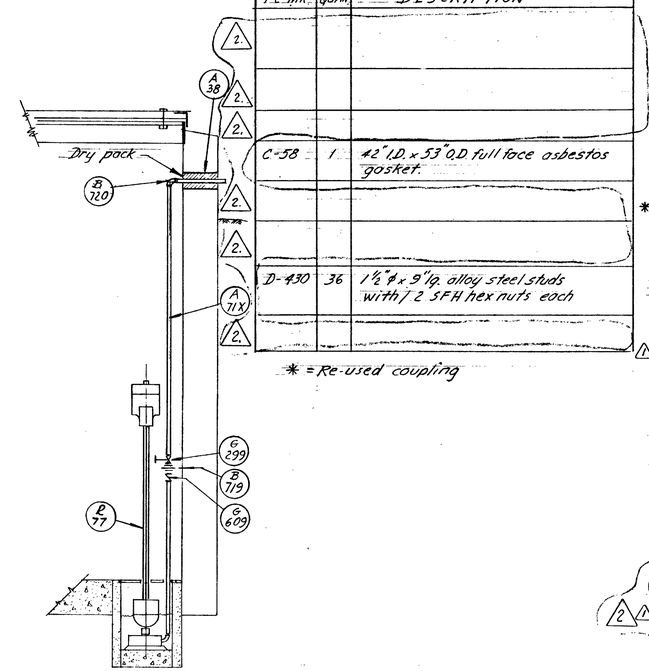

MATERIAL LIST W.O. T-4069		
PC. MK.	QUAN.	DESCRIPTION
C-58	1	42" I.D. x 53" O.D. full face asbestos gasket.
D-430	36	1½" ø x 9" lg. alloy steel studs with/ 2 SFH hex nuts each

* = Re-used coupling

	Pc Mk.	Quan.	Description
	A-10	40	LF. 6" O.D. STD STEEL CASING
	A-25	2	18" I.D. PCP 2'-6" SUMP
	A-185	2	4" I.D. STD. PIPE SLEEVE 14" LG
	A-40	2	6" I.D. STD. PIPE SLEEVE 14" LG.
	A-71X	40	LF. 1½" EX. HVY. RED. BRASS PIPE T&C.
	A-70X	1	1" x 2" LG. EX. HVY. RED. BRASS NIPPLE
	A-148A	1	42" I.D. PIPE NIPPLE FOR SPEC. M-2343
	A-148B	1	42" I.D. METER APPROACH PIPE FOR SPEC. M-2343
	A-148C	1	42" I.D. PIPE SPOOL P.E. SPEC. M-2343
	A-47A	1	20" VALVE SHAFT EXTERIOR HOUSING
	A-26	1	½" COUP. NIPPLE 18" LG.
	A-59	2	¾" " " 18" LG.
	A-60	1	1" " " 18" LG.
*	B-892	3	43⅜" SLEEVE TYPE COUPLING SPEC. 2343
	B-1342	2	1⅛" x .125" B. BRASS COUPLINGS
	C-58	3	42" I.D. x 53" O.D. x ⅛" THK. FF. ASBESTOS GASKETS W/36-1⅝" DIA. HOLES ON 49¼" BC.
	B-720	4	1⅛" - 90° - 125# BRASS ELBOW
	B-719	2	1⅛" - 125# BRASS SCREWED GROUND JOINT UNIONS
	D-18	20	¾" x 3½" LG HEX. HD. MACH. BOLT W/1 S.F. HVY. HEX. NUTS EA.
△1	D-89	72	1⅛" x 8¾" LG. ALLOY STEEL STUDS W/2 SFH HEX NUTS EA.
	D-132	20	¾" 2 UNIT TYPE 1A, PLAN CLICH ANCHOR
	D-132A	20	EXTRA LEADS
	D-278	4	⅝" x 1¾" HEX. HD CAP SCREWS.
	F-780	1	42" I.D. 50° MITERED ELBOW, P.E. M-2343
	F-781	1	2 PIECE BUTT STRAP FOR 43¾" O.D. PIPE.
	F-14	2	18" METAL SUMP COVERS
	F-35	1	BUILDERS TYPE "M" INSTRUMENT HOUSING
	F-58A	1	BUILDERS TYPE "M" INSTRUMENT MOUNTING BASE
	F-96	2	STD. STEEL LADDERS W/ 4" & 2" O BRACKETS
	F-801	1	STEEL PLATE COVER ASSEMBLY
	F-802	1	" " " "
	G-299	2	1⅛" - 125# BRZ. GATE VALVE - CRANE #440
	G-50	1	1" - 250# BRONZ COCK VALVE
	G-392	1	42" MOTOR OPERATED BUTTERFLY VALVE
	G-609	2	1⅛" 125# BRZ. VERT. LIFT CHECK VALVE CRANE #29
△2	H-220	1	42" - 100 CFS VENTURI TUBE ASSEMBLY
△2	H-220A	1	100 cfs BUILDERS TYPE M FLOW METER W/CTM TRANSMITTER & CRA-TYP REMOTE INSTRUMT.
	R-77	2	⅓ HP. SUMP PUMP (PENBERTHY)
		1	51" O.D. x 51" O.D. x 43" I.D. x ⅜" THK. ⅊ FAB. D WELD STEEL CROTCH-PLATE REINF-TEE WITH ONE END BELLED FOR STANDARD LOCK JOINT ONE END PLAIN AND SIDE OUTLET FLANGED. SPEC. M-2342.
		1	51" O.D. x ⅜" THK. ⅊ FAB STL. SPOOL WITH ONE END PLAIN & ONE SPIGOT RING FOR STD. LOCK JOINT M-2342
		1	51" I.D. x 14" WIDE x ⅜" THK. ⅊ FAB STL. COMPLETE BUTT STRAP TO BE FURNISHED IN TWO IDENTICAL PIECES TOGETHER WITH ONE PIECE 1" x ¼" STL. BAR 15" LG. & 8" STL. PIPE PLUGS. SPEC. M-2342.
		2	RUBBER GASKETS FOR 51" DESIGN DIAM. LOCK JOINT BY 3⅝" CROSS SECTION SPEC M-2342

REFERENCE DRAWINGS

B-10652 PLAN AND PROFILE
B-18641 GENERAL LAYOUT
B-18698 STEEL PLATE COVER & FRAME DETAIL - T/O
B-18699 " " " " " METER
C-9931 ITEMS REQUIRED FOR INSTALLATION
C-9932 MATERIALS REQUIRED
C-9933 " ORDERED
B-17779 WELDED STEEL PIPE
B-17786 STRUCTURAL DETAILS
C-9264 REINFORCED STEEL LIST
B-9257 ELECTRICAL ARRANGEMENT
B-9791 ELECTRICAL MATERIALS
B-18698 FRAME & COVER DETAILS T/O
B-18699 FRAME & COVER DETAILS, METER

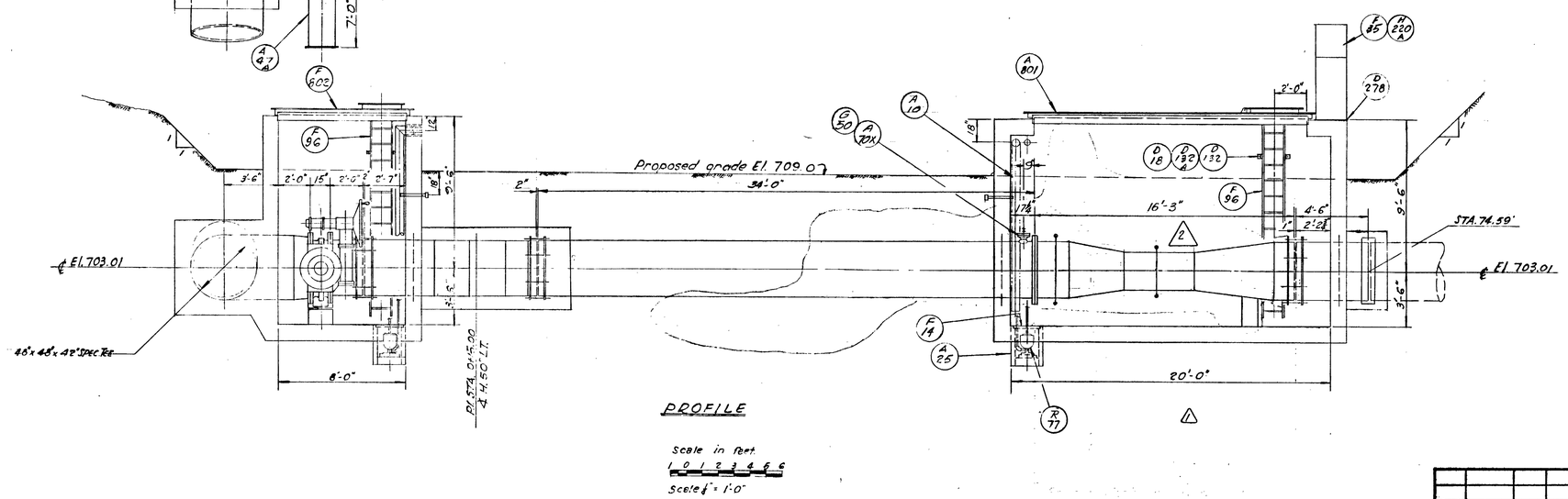

THE METROPOLITAN WATER DISTRICT OF SOUTHERN CALIFORNIA

COLORADO RIVER AQUEDUCT
DISTRIBUTION SYSTEM
SANTIAGO LATERAL
STATION 348+98.81
SERVICE CONNECTION OC-33
FOR SANTIAGO AQUEDUCT COMMISSION

PIPING, VALVE AND METER ARRANGEMENT

DRAWN C.D. RECOMMENDED
TRACED
CHECKED L.O.W. APPROVED

NO	DATE	DWN.	CKD.	REVISION	REC.	APP.
2	6-8-89	S.O.	B.P.	VENTURI TUBE WAS 24" AND EXP. METER WAS C-1488 MAT'LS		
1	1/16/70	L.W.		CHANGED VENTURI TUBE WAS 7-1048 (NOT CONSTRUCTED)		

W.O. 3239-D | LOS ANGELES | B-18642

MICROFILMED
AUG 24 1966
SEP 22 1966
FEB 5 1978
MAR 27 1980
OCT 03 1995
OCT 14 1997
DIETERICH-POST PAPER CLOTH 1085

APPENDIX E

Raw Water Pump Station Calculations

TABLE E1

BAKER WATER TREATMENT PLANT PROJECT

RAW WATER CONVEYANCE FACILITIES

IRVINE LAKE PIPELINE / BAKER HYDRAULICS FOR RAW WATER PUMP STATION

Irvine Lake WSL (ft)	Maximum Design Q at Outlet Tower (cfs)	Maximum Gravity Flow in ILP (cfs)	Q (cfs)	Tower Intake Loss (ft)	Tower Outlet Loss (ft) (30-inch)	Pipeline Length (ft) and Diameter (in)	Pipeline Loss to Serrano T/O (ft)	Q Serrano T/O to RWPS (cfs)	Pipeline Loss Serrano T/O to RWPS (ft)	Total Pipeline Loss (ft)	Suction HGL at Peters Canyon (ft)	Suction Head	Discharge Static Lift to 815'	System HGL	Discharge Static Lift to System Curve'	RWPS Discharge (cfs)	TDH to 815'	TDH to System Curve	HP Lift to 815'	HP Lift to System Curve
790	70	42.5	70.0	10.0	2.3	11,000' - 39" 2,800' - 33" and 42" parallel 5,000' - 54"	39.7	64.0	4.9	44.6	733	143	82	815	82	53.5	92	92	744	744
			60.0	7.3	1.7		29.9	54.9	3.7	33.5	747	157	68	784	37	45.9	75	44	520	304
			50.0	6.9	1.2		21.3	39.2	2.0	23.3	759	169	56	757	0	38.2	62	0	356	0
			40.0	6.4	0.7		14.1	22.4	0.7	14.8	768	178	47	734	0	30.6	50	0	232	0
			30.0	5.6	0.4		8.3	9.6	0.1	8.4	776	186	39	716	0	22.9	41	0	143	0
			20.0	4.4	0.2		3.9	2.7	0.0	3.9	781	191	34	702	0	15.3	34	0	79	0
			10.0	2.5	0.0		1.1	0.4	0.0	1.1	786	196	29	693	0	7.6	29	0	33	0
			0.0	0.0	0.0		0.0	0.0	0.0	0	790	200	25	690	0	0.0	25	0	0	0
780	67.5	40	67.5	9.3	2.1		37.2	61.5	4.5	41.7	727	137	88	804	77	51.0	97	87	750	668
			60.0	7.3	1.7		29.9	54.7	3.6	33.5	737	147	78	782	45	45.3	85	52	581	355
			50.0	5.5	1.2		21.3	45.6	2.6	23.9	749	159	66	756	6	37.8	71	11	403	64
			40.0	4.4	0.7		14.1	36.4	1.7	15.8	759	169	56	733	0	30.2	59	0	271	0
			30.0	3.6	0.4		8.3	27.3	1.0	9.3	767	177	48	716	0	22.7	50	0	172	0
			20.0	2.5	0.2		3.9	18.2	0.5	4.4	773	183	42	702	0	15.1	43	0	98	0
			10.0	1.1	0.0		1.1	9.1	0.1	1.2	778	188	37	693	0	7.6	38	0	43	0
			0.0	0.0	0.0		0.0	0.0	0.0	0	780	190	35	690	0	0.0	35	0	0	0
770	65	37.5	65.0	8.6	2.0		34.6	59.0	4.2	38.8	721	131	94	794	74	48.5	103	82	753	601
			60.0	7.3	1.7		29.9	54.5	3.6	33.5	727	137	88	780	52	44.8	95	59	640	402
			50.0	6.9	1.2		21.3	45.4	2.6	23.9	738	148	77	754	16	37.3	82	21	462	119
			40.0	6.4	0.7		14.1	36.3	1.7	15.8	747	157	68	732	0	29.8	71	0	321	0
			30.0	5.6	0.4		8.3	27.2	1.0	9.3	755	165	60	715	0	22.4	62	0	210	0
			20.0	4.4	0.2		3.9	18.2	0.5	4.4	761	171	54	702	0	14.9	55	0	124	0
			10.0	2.5	0.0		1.1	9.1	0.1	1.2	766	176	49	693	0	7.5	49	0	55	0
			0.0	0.0	0.0		0.0	0.0	0.0	0	770	180	45	690	0	0.0	45	0	0	0
760	62.5	35	62.5	8.0	1.8		32.2	56.5	3.9	36.1	714	124	101	785	70	46.0	108	78	754	541
			60.0	7.3	1.7		29.9	54.2	3.6	33.5	718	128	97	761	44	39.4	103	49	614	292
			50.0	6.4	1.2		21.3	45.2	2.6	23.9	729	139	86	741	12	32.9	90	16	448	79
			40.0	4.4	0.7		14.1	36.2	1.7	15.8	739	149	76	724	0	26.3	78	0	312	0
			30.0	3.6	0.4		8.3	27.1	1.0	9.3	747	157	68	710	0	19.7	70	0	208	0
			20.0	2.5	0.2		3.9	18.1	0.5	4.4	753	163	62	699	0	13.1	63	0	125	0
			10.0	1.1	0.0		1.1	9.0	0.1	1.2	758	168	57	693	0	6.6	58	0	57	0
			0.0	0.0	0.0		0.0	0.0	0.0	0	760	170	55	690	0	0.0	55	0	0	0
750	60	32.5	60.0	7.3	1.7		29.9	54.0	3.6	33.4	708	118	107	775	68	43.5	114	74	751	489
			50.0	6.9	1.2		21.3	45.0	2.5	23.9	718	128	97	751	33	36.3	102	37	557	205
			40.0	6.4	0.7		14.1	36.0	1.7	15.8	727	137	88	730	3	29.0	91	0	399	0
			30.0	5.6	0.4		8.3	27.0	1.0	9.3	735	145	80	714	0	21.8	82	0	270	0
			20.0	4.4	0.2		3.9	18.0	0.5	4.4	741	151	74	701	0	14.5	75	0	164	0
			10.0	2.5	0.0		1.1	9.0	0.1	1.2	746	156	69	693	0	7.3	69	0	76	0
			0.0	0.0	0.0		0.0	0.0	0.0	0	750	160	65	690	0	0.0	65	0	0	0

APPENDIX F

Forebay Calculations

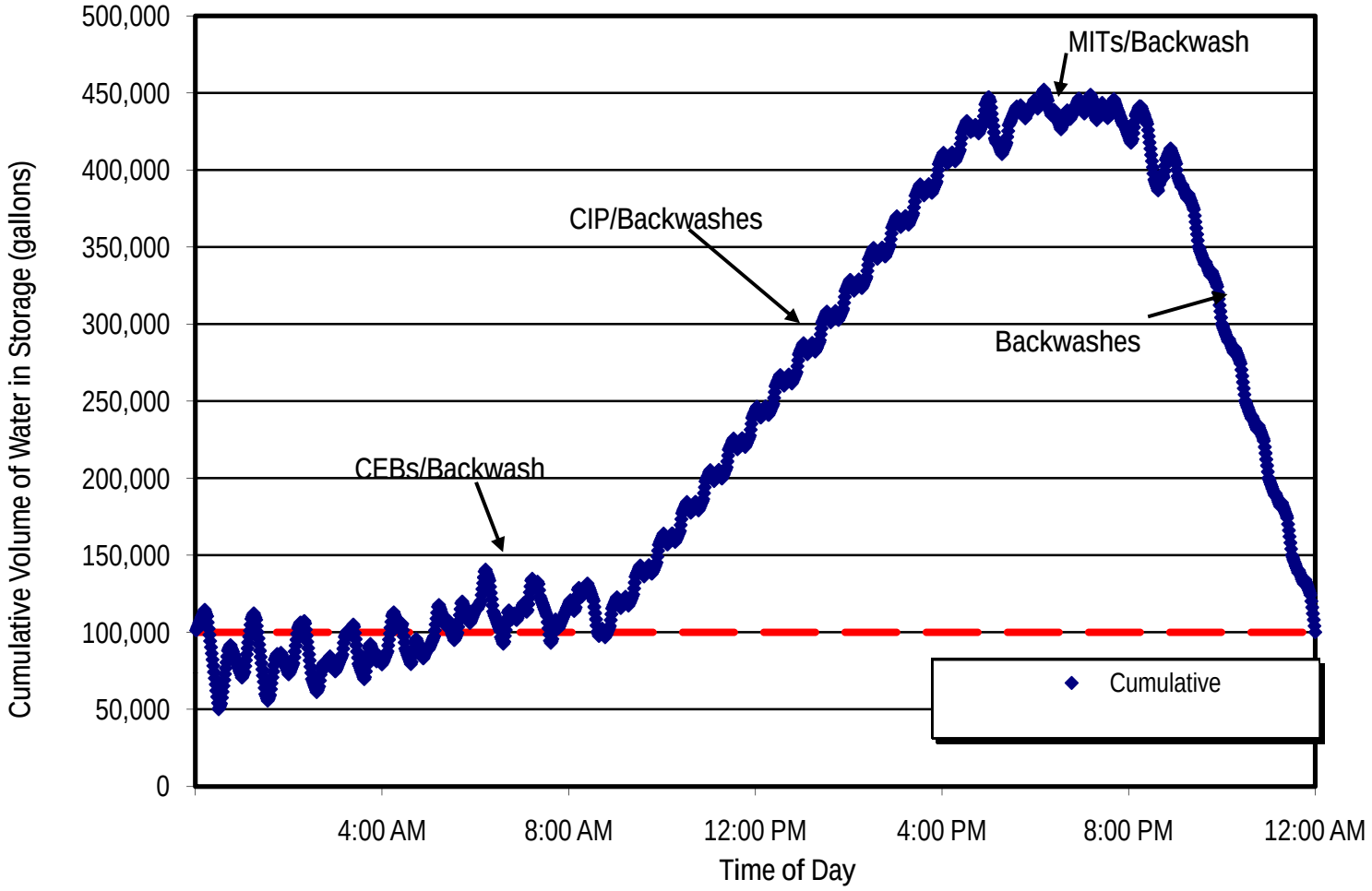
500,000
450,000
400,000
350,000
300,000
250,000
200,000
150,000
100,000
50,000
0
Cumulative Volume of Water in Storage (gallons)
MITs/Backwash
CIP/Backwashes
Backwashes
CEBs/Backwash
Cumulative
4:00 AM
8:00 AM
12:00 PM
4:00 PM
8:00 PM
12:00 AM
Time of Day

Forebay Sizing Calculations
Baker WTP
IRWD

CHLORINE DIOXIDE CONTACT CHAMBER

Raw Water Flow=	43.5	cfs	
Maximum Return Water Flows=	3.81	cfs	(2.46 mgd see MFWW Calcs)
Contact Chamber Max Flow=	47.3	cfs	
Contact Time for Mn Oxidation=	10	min	
	600	seconds	
Required Contact Chamber Volume=	28386	ft^3	
Average Chamber Depth=	13.5		
First 20 feet	19	ft	
Next 44 feet	11	ft min	
Chamber Width =	16.5	ft	
Chamber Length=	64	ft	
Calculated East Chamber Volume=	14256	ft^3	
Calculated West Chamber Volume=	14256	ft^3	
Total Volume (exclude between slab and low water level)=	28512	ft^3	
	213,270	gallons	
Time Provided=	603	seconds	
	10.0	minutes	

EQUALIZATION CHAMBER

Volume Required for MF Equalization=	500,000	gallons	
	66,845	ft^3	
Maximum depth=	10.5	feet between LL and HH (El 620.5 and EL 631)	
Channel Width=	16.5	feet	
Required Channel Length=	386	feet	
East Channel Length=	64	feet from outlweir to south end	
	128	feet from south end to end of pump bay	
West Channel=	same as East channel		
Total Length=	384	feet	
Actual Volume Provided=	497,629	gallons	
Additional Volume for Surge Equalization =	75,000	gallons	
	10,027	ft^3	
Provided Surge Volume Above High Equlization level			
Equalization Area =	12732	ft^2	
	7937	gallons per inch	
Inches above equlization elevation to provide surge equalization=	9.45	inches	

-Therefore, Oulet weir submerged
Overflow to be minimum elevation of 10" above contact zone levation of 632 or minimum 632.83'

TOTAL EQUALIZATION VOLUME	**785,899**	**gallons**
Chlorine Dioxide Contact Chamber	213,270	gallons
Equalization Chamber	497,629	gallons
Surge Volume	75,000	gallons

APPENDIX G

Process Schematics

Preoxidation/Membrane Filtration/ UV+Chlorine Disinfection/Chloramination

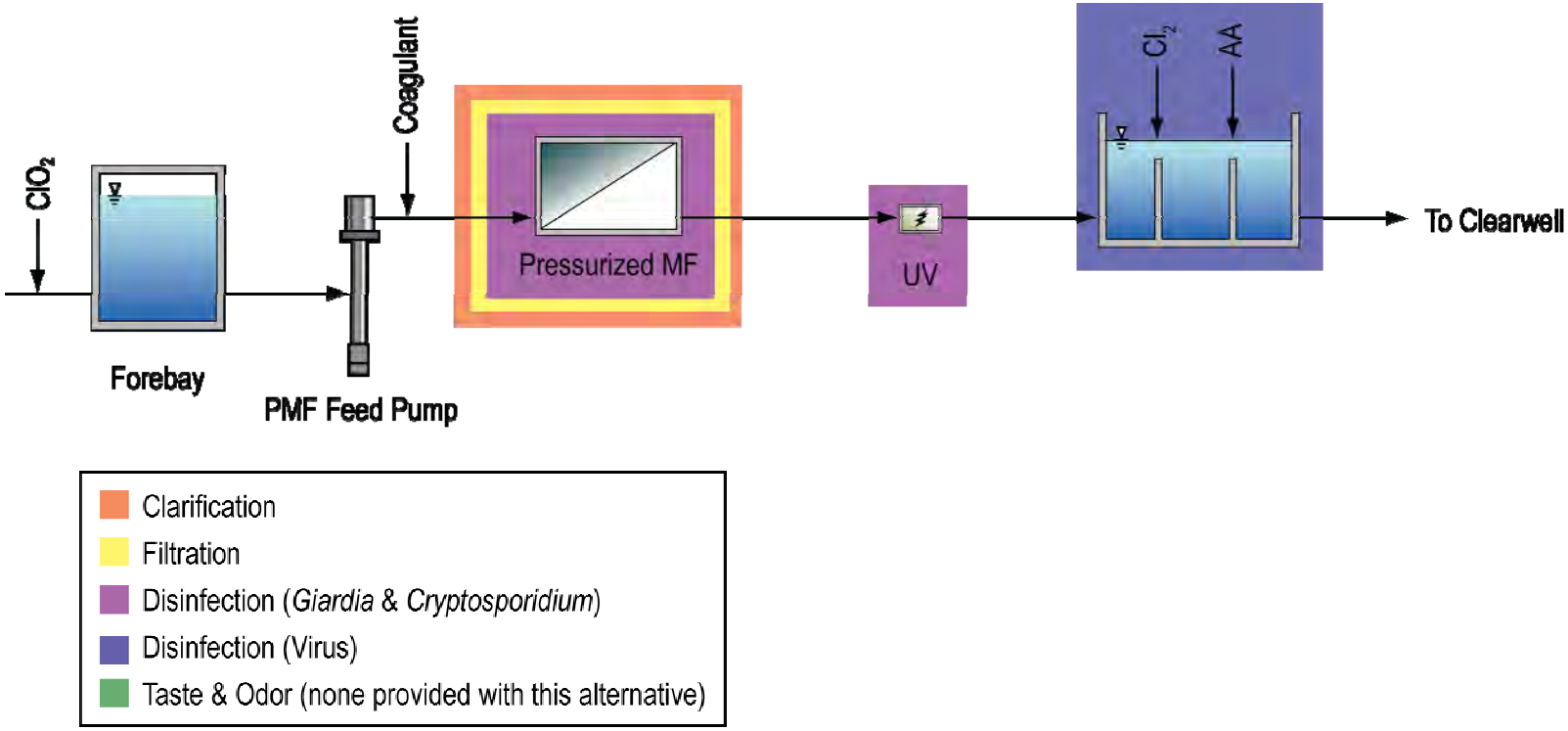

Preoxidation/Membrane Filtration/GAC Contactors/UV/Chlorine Disinfection/Chloramination

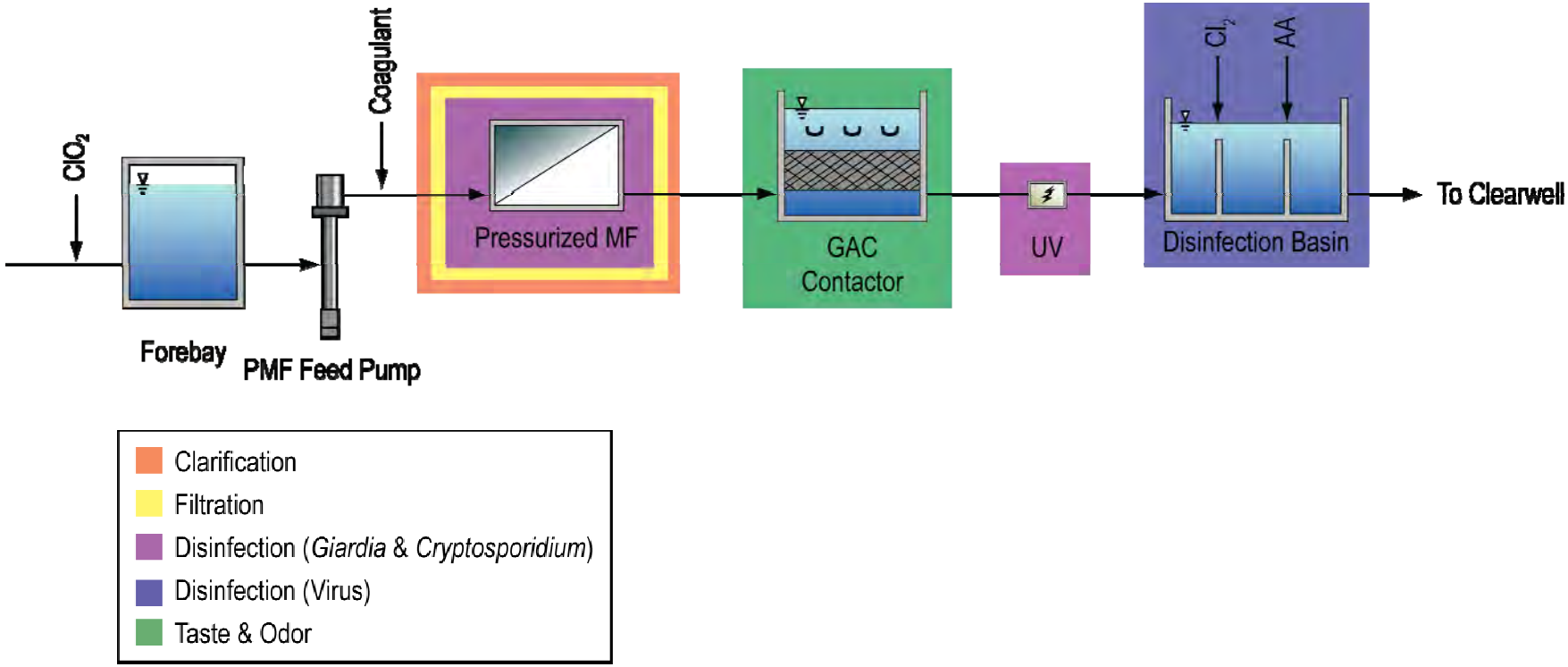

Preoxidation/PAC/Membrane Filtration/ UV/Chlorine Disinfection/Chloramination

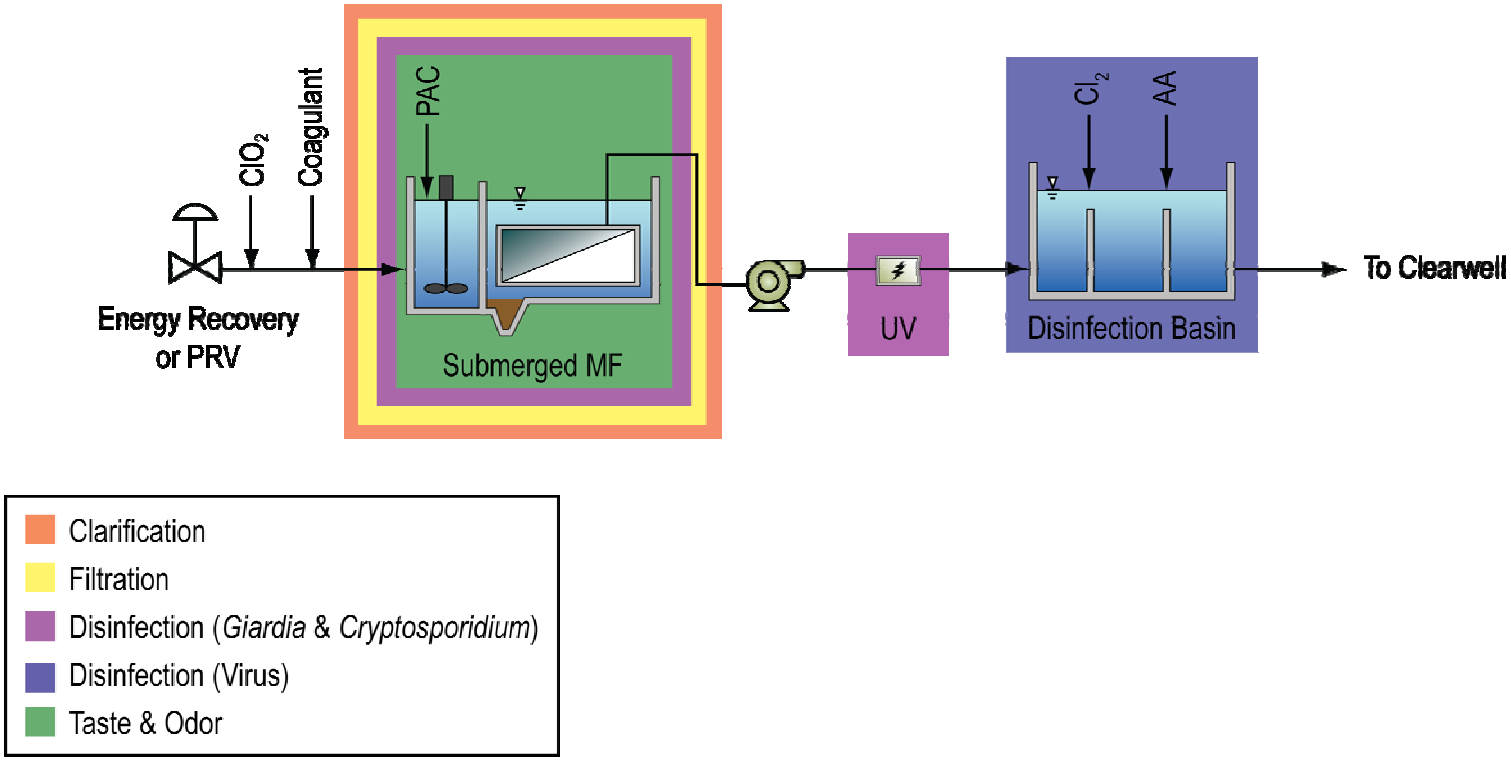

Ozone/BAF/Membrane Filtration/Chloramination

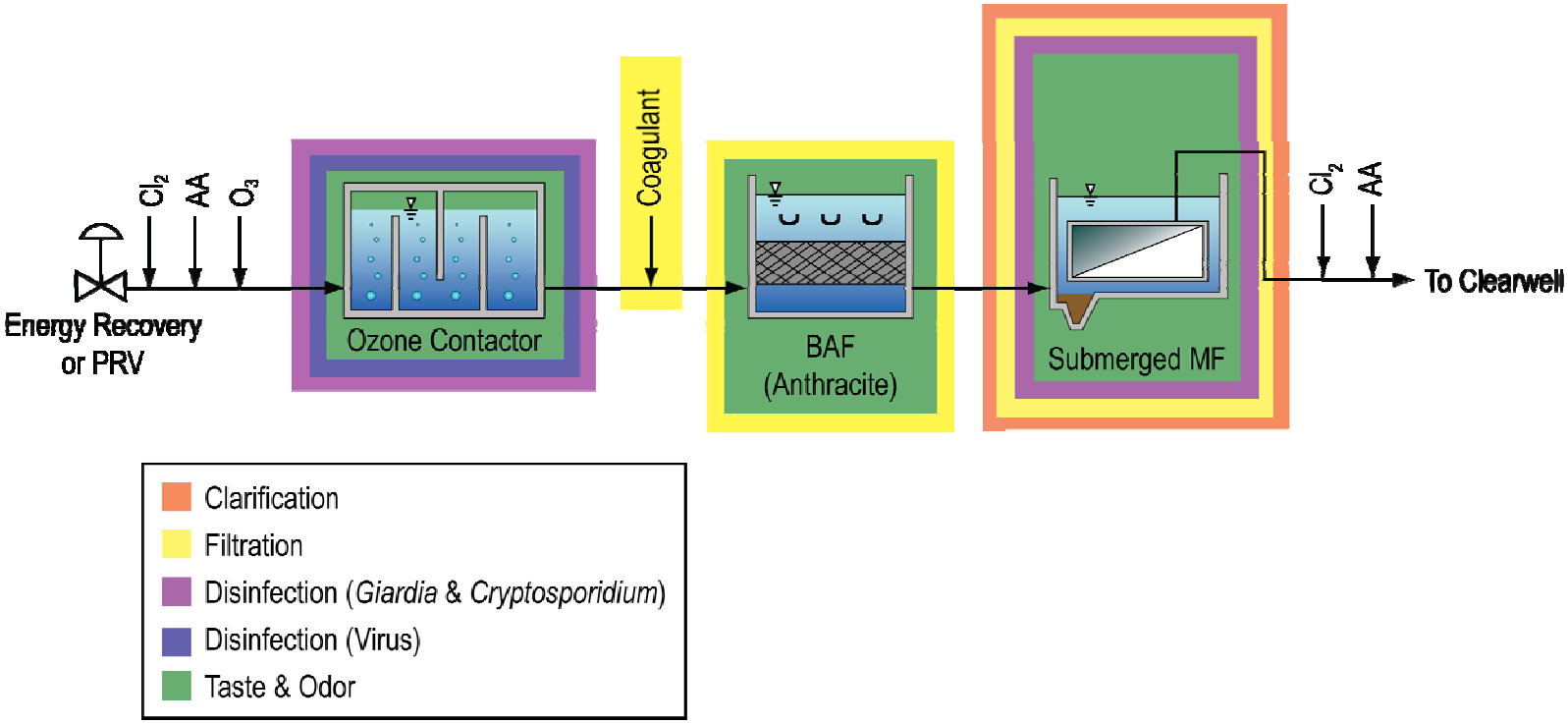

Ozone/Media Filtration/ Chloramination

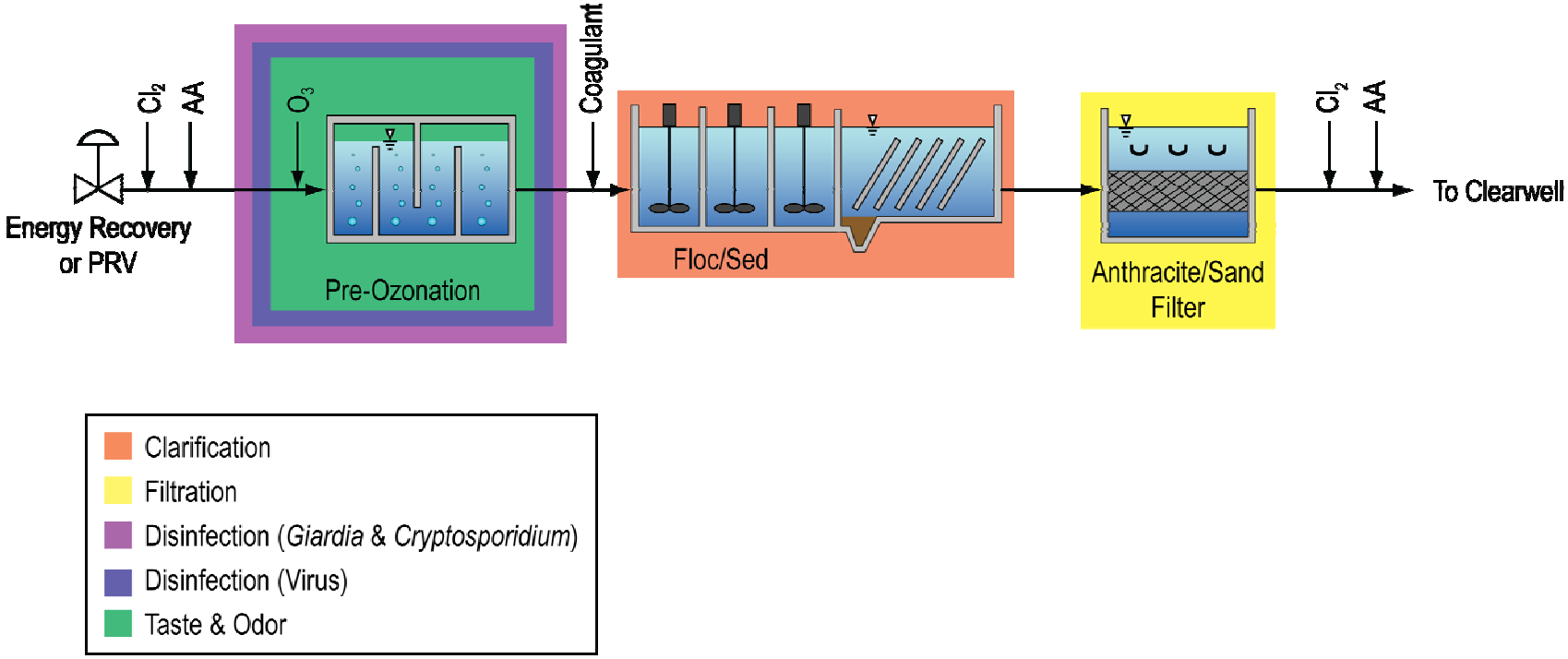

Preoxidation/GAC Media Filtration/ Chlorine Disinfection/Chloramination

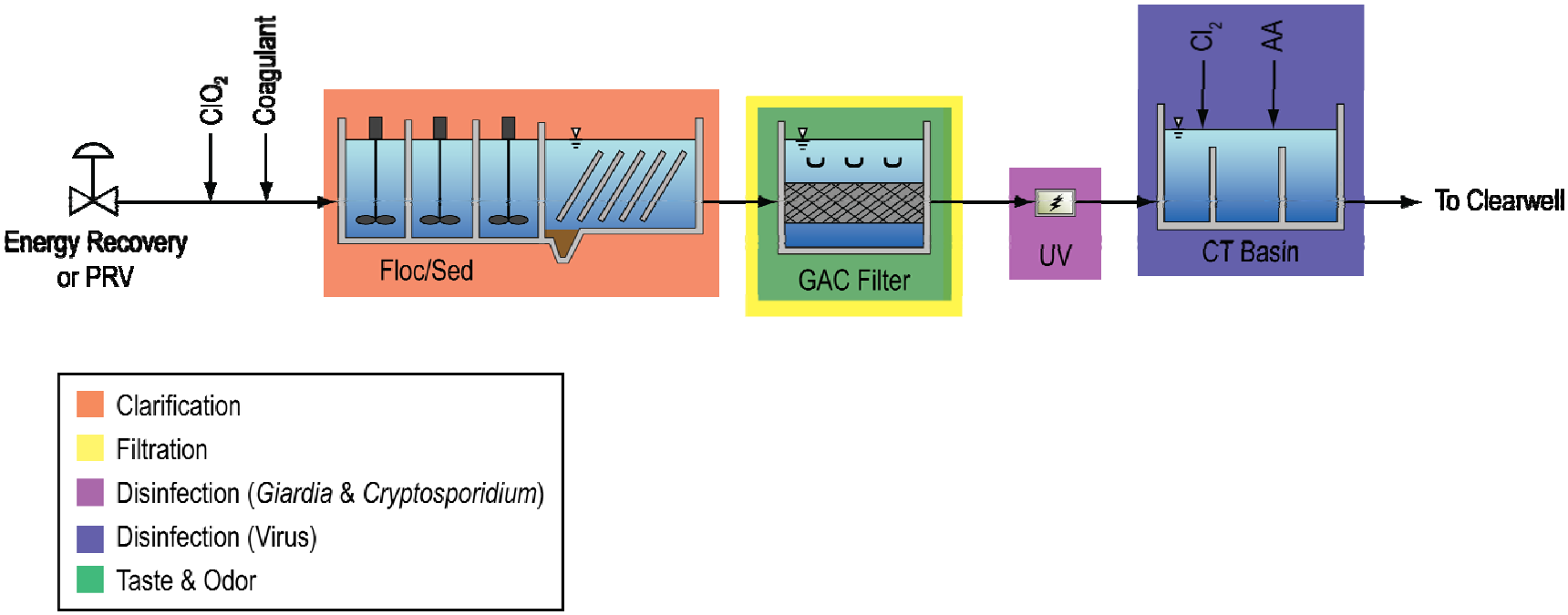

APPENDIX H

Chemical System Calculations

Primary Coagulant (PC) SYSTEM CRITERIA
Baker WTP
Irvine Ranch Water District

Description		Units	Min	Avg	Max
Ferric Chloride PROPERTIES					
Concentration	39 %				
Specific Gravity	1.42				
Solution Strength	4.6 lb/gal				
DESIGN CRITERIA					
Process Flow Rate		mgd	14.1	28.1	28.1
Chemical Dosage		mg/l	2.0	10.0	20.0
Chemical Usage		ppd	234	2344	4687
Chemical Feed Rate		gph	2.1	21.2	42.4
Chemical Feed Rate		gpm	0.04	0.35	0.71
Chemical Feed Rate (Pre-Membrane)		gpd	51	508	1017
BULK STORAGE TANKS					
Bulk Storage Tanks		No.		2	
Storage Capacity (each tank)		gal		8,000	
Storage Capacity (total)		gal		16,000	
Storage Time (total)		days	268	31	20
Delivery Truck Full Load		gal		4,000	
Time Between Delivery (average)		days	67	7	5
No. of Truck Deliveries in Storage		#		4	
METERING PUMPS					
Pump Type				Hydraulic Diaphragm	
Pump Model Number, or equal				TBD	
Connection Size		mm		TBD	
Motor Speed Turndown Ratio		ratio		TBD	
Stroke Turndown Ratio		ratio		TBD	
Required Pump Capacity (maximum)		gph		42	
Required Pump Capacity (minimum)		gph		2.1	
Required Minimum Turndown		ratio		20:1	
Process Flow Rate		mgd	14.1	28.1	28.1
Number of Metering Pumps in Service		No.	1	1	1
Chemical Feed Rate (Total)		gph	2	21	42
Metering Pump Capacity (Per Pump)		gph	TBD	TBD	TBD
Pump Speed		%	TBD	TBD	TBD

Notes:
1. Motor speed under PLC control to maintain pH set point. Stroke length manually adjusted, as required, to modify metering pump range.

Primary Coagulant (PC) SYSTEM CRITERIA
Baker WTP
Irvine Ranch Water District

Description		Units	Min	Avg	Max
Ferric Chloride PROPERTIES					
Concentration	39 %				
Specific Gravity	1.42				
Solution Strength	4.6 lb/gal				
DESIGN CRITERIA					
Process Flow Rate		mgd	14.1	28.1	28.1
Chemical Dosage		mg/l	2.0	10.0	20.0
Chemical Usage		ppd	234	2344	4687
Chemical Feed Rate		gph	2.1	21.2	42.4
Chemical Feed Rate		gpm	0.04	0.35	0.71
Chemical Feed Rate (Pre-Membrane)		gpd	51	508	1017
BULK STORAGE TANKS					
Bulk Storage Tanks		No.		2	
Storage Capacity (each tank)		gal		8,000	
Storage Capacity (total)		gal		16,000	
Storage Time (total)		days	268	31	20
Delivery Truck Full Load		gal		4,000	
Time Between Delivery (average)		days	67	7	5
No. of Truck Deliveries in Storage		#		4	
METERING PUMPS					
Pump Type				Hydraulic Diaphragm	
Pump Model Number, or equal				TBD	
Connection Size		mm		TBD	
Motor Speed Turndown Ratio		ratio		TBD	
Stroke Turndown Ratio		ratio		TBD	
Required Pump Capacity (maximum)		gph		42	
Required Pump Capacity (minimum)		gph		2.1	
Required Minimum Turndown		ratio		20:1	
Process Flow Rate		mgd	14.1	28.1	28.1
Number of Metering Pumps in Service		No.	1	1	1
Chemical Feed Rate (Total)		gph	2	21	42
Metering Pump Capacity (Per Pump)		gph	TBD	TBD	TBD
Pump Speed		%	TBD	TBD	TBD

Notes:
1. Motor speed under PLC control to maintain pH set point. Stroke length manually adjusted, as required, to modify metering pump range.

CAUSTIC SODA (CS) SYSTEM CRITERIA FOR
CLEANING SOLUTION MAKEUP AND NEUTRALIZATION
Baker WTP (BASIS - Pall MF)
Irvine Ranch Water District

Description			
CAUSTIC SODA PROPERTIES			
Concentration	25 %		
Specific Gravity	1.27		
Solution Strength	2.6 lb/gal		
For citric neutralization	0.82 lbs NaOH/lb citric acid		
DESIGN CRITERIA (CS/SH CIP AND CEB SOLUTIONS)			
Volume Solution per CEB/CIP		gallons	5000
Chemical Dosage CIP		mg/l	12000
Chemical Dosage CEB		mg/l	0
USAGE FOR CIP CLEANING SOLUTIONS			
Pounds/CIP		lbs.	501
Volume Chemical per CIP		gallons	189
Time for Chem Transfer		minutes	TBD
Required Minimum Transfer Pump Flowrate		gpm	TBD
USAGE FOR CEB CLEANING SOLUTIONS			
Pounds/CEB		lbs.	0
Volume Chemical per CEB		gallons	0
Time for Chem Transfer		minutes	TBD
Required Minimum Transfer Pump Flowrate		gpm	TBD
TOTAL USAGE PER RACK			
CIP Frequency		per month	1
CEB Frequency		per month	30
Monthly Usage per Rack		gallons	189
NO. OF RACKS		**ea**	10
TOTAL MONTHLY USAGE FOR MEMBRANE CLEANING		**gallons**	1894
DESIGN CRITERIA (NEUTRALIZATION OF ACID CIP AND CEB SOLUTIONS)			
Volume Solution per CEB/CIP		gallons	5000
Chemical Dosage TO NEUTRALIZE ACID CIP		mg/l	16400
Chemical Dosage TO NEUTRALIZE ACID CEB		mg/l	16400
USAGE FOR NEUTRALIZING CIP ACID CLEANING SOLUTIONS			
Pounds/CIP		lbs.	684
Volume Chemical per CIP		gallons	259
Time for Chem Transfer		minutes	TBD
Required Minimum Transfer Pump Flowrate		gpm	TBD
USAGE FOR NEUTRALIZING CEB ACID CLEANING SOLUTIONS			
Pounds/CEB		lbs.	684
Volume Chemical per CEB		gallons	259
Time for Chem Transfer		minutes	TBD
Required Minimum Transfer Pump Flowrate		gpm	TBD
TOTAL USAGE PER RACK			
CIP Frequency		per month	1.00
CEB Frequency		per month	1.00
Monthly Usage per Rack		gallons	518
NO. OF RACKS		**ea**	10
TOTAL MONTHLY USAGE FOR MEMBRANE CLEANING		**gallons**	5177
BULK STORAGE TANKS	SEE "CAUSTIC SODA FOR CORROSION CONTROL"		
TRANSFER PUMPS FOR CIP SOLUTION MAKEUP			
Pump Type			AIR ACTUATED DIAPHRAGM
Pump Model Number, or equal			TBD
Connection Size		inches	TBD
Speed Turndown Ratio		ratio	TBD
Total Turndown Ratio (w/ changing hose)		ratio	TBD
Required Pump Capacity (maximum)		gpm	TBD
Required Pump Capacity (minimum)		gpm	TBD
Total Turndown		ratio	TBD
Number of Transfer Pumps in Service		No.	1
Chemical Feed Rate (Total)		gpm	TBD
Chemical Feed Rate (Per Pump)		gpm	TBD
Pump Speed		%	TBD
TRANSFER PUMPS			
Pump Type			AIR ACTUATED DIAPHRAGM
Pump Model Number, or equal			TBD
Connection Size		inches	TBD
Speed Turndown Ratio		ratio	TBD
Total Turndown Ratio (w/ changing hose)		ratio	TBD
Required Pump Capacity (maximum)		gpm	TBD
Required Pump Capacity (minimum)		gpm	TBD
Total Turndown		ratio	TBD
Number of Transfer Pumps in Service		No.	1
Chemical Feed Rate (Total)		gpm	TBD
Transfer Pump Capacity (Per Pump)		gpm	TBD
Pump Speed		%	TBD

Notes:
1. Transfer pumps will be calibrated on site to deliver required flow and operated at constant speed.

Caustic Soda (CS) SYSTEM CRITERIA for Corrosion Control
Baker WTP
Irvine Ranch Water District

Description		Units	Min	Avg	Max
CAUSTIC SODA PROPERTIES					
Concentration	25 %				
Specific Gravity	1.27				
Solution Strength	2.6 lb/gal				
DESIGN CRITERIA					
Process Flow Rate		mgd	14.1	28.1	28.1
Chemical Dosage		mg/l	1	4	7
Chemical Usage		ppd	117	937	1640
Chemical Feed Rate		gph	1.8	14.8	25.9
Chemical Feed Rate		gpm	0.03	0.25	0.43
Chemical Feed Rate		gpd	44	355	621
Monthly Usage for Corrosion Control		gallons	1330	10638	18617
Membrane Cleaning Monthly Usage		gallons	7071	7071	7071
BULK STORAGE TANKS					
Bulk Storage Tanks		No.		2	
Storage Capacity (each tank)		gal		8,500	
Storage Capacity (total)		gal		17,000	
Storage Time (total incl. membrane cleaning)		days	61	29	20
Delivery Truck Full Load		gal		4,500	
Time Between Delivery (average)		days	16	8	5
				4	
METERING PUMPS (for Corrosion Control)					
Pump Type				Hydraulic Diaphragm	
Pump Model Number, or equal				TBD	
Connection Size		mm		TBD	
Motor Speed Turndown Ratio		ratio		TBD	
Stroke Turndown Ratio		ratio		TBD	
Required Pump Capacity (maximum)		gph		26	
Required Pump Capacity (minimum)		gph		1.8	
Required Minimum Turndown		ratio		14:1	
Process Flow Rate		mgd	14.1	28.1	28.1
Number of Metering Pumps in Service		No.	1	1	1
Chemical Feed Rate (Total)		gph	2	15	26
Metering Pump Capacity (Per Pump)		gph	TBD	TBD	TBD
Pump Speed		%	TBD	TBD	TBD

Notes:
1. Motor speed under PLC control to maintain pH set point. Stroke length manually adjusted, as required, to modify metering pump range.

HYDROCHLORIC ACID (HCL) SYSTEM CRITERIA
Baker WTP (BASIS - Siemens MF)
Irvine Ranch Water District

Description		Units	Avg
CITRIC ACID PROPERTIES			
Concentration	15.0 %		
Specific Gravity	1.07		
Solution Strength	1.34 lb/gal		
DESIGN CRITERIA (Acid CIP)			
Volume Solution per CEB/CIP		gallons	5000
Chemical Dosage for CIP		mg/l	400
Chemical Dosage for CEB		mg/l	400
USAGE FOR CIP			
Pounds/CIP		lbs.	17
Volume Chemical per CIP		gallons	12
Time for Chem Transfer		minutes	TBD
Required Minimum Transfer Pump Flowrate		gpm	TBD
USAGE FOR CEB			
Pounds/CEB		lbs.	17
Volume Chemical per CEB		gallons	12
Time for Chem Transfer		minutes	TBD
Required Minimum Transfer Pump Flowrate		gpm	TBD
TOTAL USAGE PER RACK			
CIP Frequency		per month	1
CEB Frequency		per month	1
Monthly Usage per Rack		gallons	25
NO. OF RACKS		**ea**	10
TOTAL MONTHLY USAGE FOR MEMBRANE CLEANING		**gallons**	100
BULK STORAGE TANKS	SEE "CHLORINE DIOXIDE (CDO) THREE CHEMICAL SYSTEM CRITERIA"		
TRANSFER PUMPS			
Pump Type			AIR ACTUATED DIAPHRAGM
Pump Model Number, or equal			TBD
Connection Size		inches	TBD
Speed Turndown Ratio		ratio	TBD
Total Turndown Ratio (w/ changing hose)		ratio	TBD
Pump Capacity (maximum)		gpm	TBD
Pump Capacity (minimum)		gpm	TBD
Total Turndown		ratio	TBD
Number of Metering Pumps in Service		No.	1
Chemical Feed Rate (Total)		gpm	TBD
Chemical Feed Rate (Per Pump)		gpm	TBD
Pump Speed		%	TBD

Notes:
1. Transfer pumps will be calibrated on site to deliver required flow and operated at constant speed.

SODIUM BISULFITE (SBS) SYSTEM CRITERIA
Baker WTP (BASIS - Pall MF)
Irvine Ranch Water District

Description		Units	Plant Capacity 28 mgd
SODIUM BISULFITE PROPERTIES			
Concentration	38 %		
Specific Gravity	1.34		
Solution Strength	4.2 lb/gal		
For SH neutralization	1.47 lbs SBS/lb CL2		
DESIGN CRITERIA (Sodium Hypochlorite CEB/CIP)			
DESIGN CRITERIA (NEUTRALIZATION OF SH EFM/CIP)			
SEE "SODIUM HYPOCHLORITE (SH) MEMBRANE CLEANING SYSTEM CRITERIA" FOR SH CLEANING DOSES			
Volume Solution per CEB/CIP		gallons	5000
Chemical Dosage CIP		mg/l	1470
Chemical Dosage CEB		mg/l	588
USAGE FOR CIP			
Pounds/CIP		lbs.	61.3
Volume Chemical per CIP		gallons	14
Time for Chem Transfer		minutes	TBD
Required Minimum Transfer Pump Flowrate		gpm	TBD
USAGE FOR CEB			
Pounds/CEB		lbs.	25
Volume Chemical per CEB		gallons	5.8
Time for Chem Transfer		minutes	TBD
Required Minimum Transfer Pump Flowrate		gpm	TBD
TOTAL USAGE PER RACK			
CIP Frequency		per month	1
CEB Frequency		per month	30
Monthly Usage per Rack		gallons	188
NO. OF RACKS		**ea**	10
TOTAL MONTHLY USAGE FOR MEMBRANE CLEANING		**gallons**	**1881**
BULK STORAGE TANKS			
Storage Tanks		No.	1
Selected Volume per Tank		gal	6,300
Storage Capacity (total)		gal	6,300
Storage Time (total)		days	100
Delivery Truck Full Load		gal	4,200
Time Between Delivery (average)		days	67
No. of Truck Deliveries in Storage		#	1.5
TRANSFER PUMPS			
Pump Type			AIR ACTUATED DIAPHRAGM
Pump Model Number, or equal			TBD
Connection Size		inches	TBD
Speed Turndown Ratio		ratio	TBD
Total Turndown Ratio (w/ changing hose)		ratio	TBD
Required Pump Capacity (maximum)		gpm	TBD
Required Pump Capacity (minimum)		gpm	TBD
Total Turndown		ratio	TBD
Number of Transfer Pumps in Service		No.	1
Chemical Feed Rate (Total)		gpm	TBD
Transfer Pump Capacity (Per Pump)		gpm	TBD
Pump Speed		%	TBD

Notes:
1. Transfer pumps will be calibrated on site to deliver required flow and operated at constant speed.

SODIUM HYPOCHLORITE (SH) MEMBRANE CLEANING SYSTEM CRITERIA
Baker WTP (BASIS - Pall MF)
Irvine Ranch Water District

Description			Units	Avg
SODIUM HYPOCHLORITE PROPERTIES				
Concentration	10.80 %	as NaOCl		
Specific Gravity	1.17			
Solution Strength	1.050 lb SH/gal			
Solution Strength	1.000 lb Cl/gal			
DESIGN CRITERIA (SH EFM/CIP)				
Volume Solution per EFM/CIP			gallons	5000
Chemical Dosage CIP			mg/l	1000
Chemical Dosage CEB			mg/l	400
USAGE FOR CIP				
Pounds/CIP			lbs.	41.7
Volume Chemical per CIP			gallons	42
Time for Chem Transfer			minutes	TBD
Required Minimum Transfer Pump Flowrate			gpm	TBD
USAGE FOR CIP				
Pounds/CEB			lbs.	16.69
Volume Chemical per CEB			gallons	16.7
Time for Chem Transfer			minutes	TBD
Required Minimum Transfer Pump Flowrate			gpm	TBD
TOTAL USAGE PER RACK				
CIP Frequency			per month	1
CEB Frequency			per month	30
Monthly Usage per Rack			gallons	542
NO. OF RACKS			**ea**	**10**
TOTAL MONTHLY USAGE FOR MEMBRANE CLEANING			**gallons**	**5423**
BULK STORAGE TANKS	SEE "SODIUM HYPOCHLORITE (SH) SYSTEM CRITERIA"			
TRANSFER PUMPS				
Pump Type				AIR ACTUATED DIAPHRAGM
Pump Model Number, or equal				TBD
Connection Size			inches	TBD
Speed Turndown Ratio			ratio	TBD
Total Turndown Ratio (w/ changing hose)			ratio	TBD
Required Pump Capacity (maximum)			gpm	TBD
Required Pump Capacity (minimum)			gpm	TBD
Total Turndown			ratio	TBD
Number of Transfer Pumps in Service			No.	1
Chemical Feed Rate (Total)			gpm	TBD
Transfer Pump Capacity (Per Pump)			gpm	TBD
Pump Speed			%	TBD

Notes:
1. Transfer pumps will be calibrated on site to deliver required flow and operated at constant speed.

SODIUM HYPOCHLORITE (SH) DISINFECTION SYSTEM CRITERIA
Baker WTP
Irvine Ranch Water District

Description		Units	Min	Avg	Max
SODIUM HYPOCHLORITE PROPERTIES					
Concentration	10.8 %	as NaOCl			
Specific Gravity	1.17				
Solution Strength	1.050 lb SH/gal				
Solution Strength	1.000 lb Cl/gal				
DESIGN CRITERIA					
Process Flow Rate		mgd	14.1	28.1	28.1
Chemical Dosage for Disinfection (mg/L of Chlorine)		mg/l	2.5	3	4
Chemical Feed Rate		gph	12.2	29.3	39.0
Chemical Feed Rate		gpm	0.20	0.49	0.65
Chemical Feed Rate		ml/min	770	1,847	2,463
Daily Usage		ppd	293	703	937
Monthly Usage for Disinfection		gallons	8,786	21,086	28,115
Monthly Usage for MF Cleaning		gallons	5,423	5,423	5,423
Monthly Usage for ClO2 Generation		gallons	1,024	4,098	5,737
Total Monthly Usage at 28 mgd		**gallons**	**15,233**	**30,607**	**39,275**
BULK STORAGE TANKS					
Bulk Storage Tanks		No.		2	
Storage Capacity (each tank)		gal		8,500	
Storage Capacity (total)		gal		17,000	
Storage Time (total)		days	33	17	13
Delivery Truck Full Load		gal		4,900	
Time Between Delivery (average)		days	10	5	4
No. of Fuill trucks i					
DISINFECTION SYSTEM METERING PUMPS					
Pump Type				Hydraulic Diaphragm	
Pump Model Number, or equal				TBD	
Connection Size		mm		TBD	
Speed Turndown Ratio		ratio		TBD	
Total Turndown Ratio		ratio		TBD	
Required Pump Capacity (maximum)		gph		40	
Required Pump Capacity (minimum)		gph		10	
Required Minimum Turndown		ratio		4:1	
Process Flow Rate		mgd	14.1	28.1	28.1
Number of Metering Pumps in Service		No.	1	1	1
Chemical Feed Rate (Total)		gph	12	29	39
Metering Pump Capacity (Per Pump)		gph	TBD	TBD	TBD
Pump Speed		%	TBD	TBD	TBD

Notes:
1. Motor speed under PLC control to maintain chlorine residual set point. Stroke length manually adjusted, as required, to modify metering pump range.

APPENDIX I

Backwash Wastewater Calculations

Meurer Research, Inc.
6270 Joyce Dr. Golden, CO 80403
Phone 303-279-8373 Fax 303-279-8429

Plate Settler Design Sheet

Project Name: Irvine Ranch Water District

Date: 4/23/2009

Total Design Flow:	3.00 mgd	2084 gpm	Number of Basins:	1
Design Flow per Basin:	3.00 mgd	2084 gpm	Length of Basin:	40 ft
Hydraulic Flow per Basin (max.):	3.00 mgd	2084 gpm	Width of Basin:	20 ft
			Depth of Basin (SWD):	16 ft

Design Loading Rate:	0.4 gpm/ft^2	Effective Settling Area:	5209 ft^2
Efficiency Factor:	90 %	Projected Settling Area:	5788 ft^2
Angle of Plate Inclination:	55 degrees	Actual Settling Area:	10090 ft^2

Width of plate:	4.5	Plate Settler Area:	45.0 ft^2
Length of plate:	10	Total Plates per Basin:	224
No. of Rows per Basin:	3	No. of Plate Cartridges per Row:	1
Flow per Plate:	9.29 gpm	No. of Plate Settlers per Cartridge:	75
Outlet Orifices per Plate:	4	Weight of Cartridge:	4498 lbs
Diameter of Orifices:	3/4 inches	Length of Plate Settler Equipment:	20.0 ft
Head loss through orifices (D):	1.38 inches	Width of Plate Settler Equipment:	18.3 ft

Number of Troughs:	3 (2 + 2 half troughs)	Width of Trough (A):	12 inches
Flow per Trough:	695 gpm	Depth of Trough (B):	12 inches
Trough Capacity:	717 gpm	Head loss over weir (C):	0.77 inches

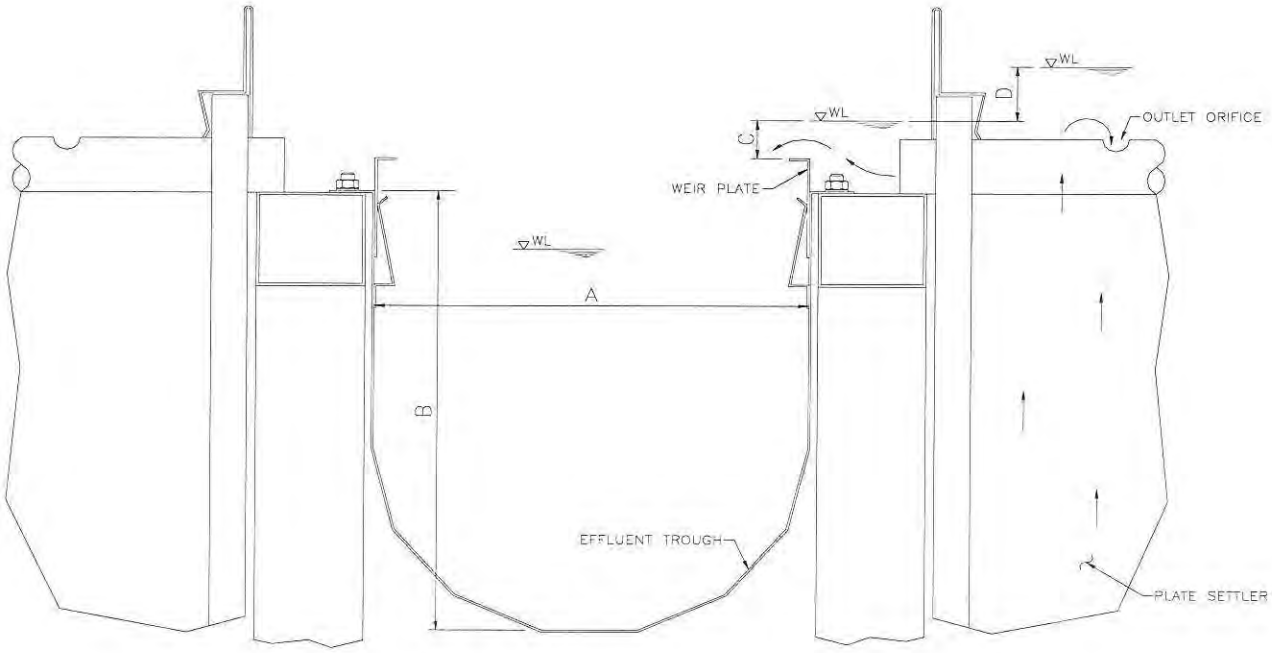

Floc/Sed

Assumption: Coagulant used in the primary process stream; coagulation here is supplemental

		MAX	AVG	MIN	
Flow	mgd	3.0	1.4	0.3	
Flash mix type:			Pump Diffusion		
Coagulant:		PACl	PACl	PACl	
Dose:	mg/L	20	10	5	
Flocculator Type:		Vertical	Vertical	Vertical	
Flocculation time	min	25	25	25	per Susumu pg. 376
Total Flocculation basin volume	gallons	52080	52080	52080	
No. of Stages	ea	2	2	2	
Flocculation volume each stage	gallons	26040	26040	26040	
	ft3	3481	3481	3481	
L,W,H	ft	15	15	15	
G					
Stage 1		60	60	60	
Stage 2		30	30	30	
Power Stage 1	Hp	0.8	0.8	0.8	
Power Stage 2	Hp	0.2	0.2	0.2	
Total Power	Hp	1.0	1.0	1.0	

APPENDIX J

Ultraviolet Light Disinfection Calculations

DESCRIPTION		UV FOR DISINFECTION ONLY		REFERENCE
		LPHO LAMP ALTERNATIVE	MP LAMP ALTERNATIVE	
Approach				
Year 1		Install UV reactors for disinfection only (LPHO lamps, 50 KVA)	Install UV reactors for disinfection only (MP lamps, 230 KVA)	
Unit Costs				
UV Disinfection Equipment		$487,000	$437,000	Vendor Quote
Equipment Installation	33%	$162,333	$145,667	Tracy, CA
Mobilization/Insurance/Management	10%	$64,933	$58,267	
Annual O&M Cost		$15,000	$55,000	UVCAT
Present Worth Analysis (i=4.5%)				
P		$714,267	$640,933	
P/A (30 years)	16.2889	$244,333	$895,889	
TOTAL		$958,600	$1,536,822	

Notes:
1) UV reactor is sized to minimize headloss and maximize head available to the membrane system. Therefore, buiding size and process mechanical are the same for LPHO reactors and MP reactors
2) Annual O&M cost for base loaded WTP at 25 MGD. Water UV transmittance at 85%. 1.5-log Crypto/Giardia inactivation. Power at $0.13/kWhr. Replacement lamps included
3) UVCAT is Carollo Engineers proprietary simulation software

DESCRIPTION		UV FOR DISINFECTION INITIALLY. UV/AOP AFTER 10 YEARS		REFERENCE
		LPHO/MP ALTERNATIVE	MP ALTERNATIVE	
Approach				
Year 1		Install UV reactors for disinfection only (LPHO lamps, 50 KVA)	Install UV reactors for UV/AOP. Install UV MP lamps for disinfection only. Install electrical for disinfection only (230 KVA)	
Year 1		Size plant switchboard, treatment building switchboard or MCC, and conductors in between to accommodate future installation and power UV/AOP (900 KVA).		
Year 11		Remove LPHO UV disinfection reactors. Install UV/AOP reactors. Upgrade electrical switchboards	Add MP lamps to UV reactors for UV/AOP. Upgrade electrical switchboards	
Unit Costs				
UV Disinfection Equipment		$487,000	$437,000	Vendor Quote
Installation	33%	$162,333	$145,667	Tracy, CA
Mobilization/Insurance/Management	10%	$64,933	$58,267	
Annual O&M Cost (Years 1 to 10)		$15,000	$55,000	UVCAT
Salvage Value (Year 11)		$0	N.A.	
UV/AOP Equipment (Year 11)		$1,036,000	$599,000	Vendor Quote
Installation (Year 11)	33%	$341,880	$197,670	Tracy, CA
Mobilization/Insurance/Management (Y 11)	10%	$137,788	$79,667	
Annual O&M Cost (Years 11 to 30)		$425,000	$425,000	UVCAT
Present Worth Analysis (i=4.5%)				
P		$714,267	$640,933	
P/A (10 years)	7.9127	$118,691	$435,199	
P/F (11 years)	0.6162	$933,953	$539,998	
P/A (years 11 to 30)	13.0079	$5,528,373	$5,528,373	
TOTAL		$7,295,283	$7,144,504	

Notes:
1) UV reactor is sized to minimize headloss and maximize head available to the membrane system. Therefore, buiding size and process mechanical are the same for LPHO reactors and MP reactors
2) Annual O&M cost for base loaded WTP at 25 MGD. Water UV transmittance at 85%. 1.5-log Crypto/Giardia inactivation (disinfection). 1-log MIB removal (AOP). AOP used 3 months per year. Power at $0.13/kWhr. Replacement lamps included
3) UVCAT is Carollo Engineers proprietary simulation software

APPENDIX K

Contact Basin Disinfection Calculations

BAKER REGIONAL WATER TREATMENT PLANT
4-LOG VIRUS INACTIVATION WITH FREE CHLORINE

	Max	Min.	CT (mg/L*min)					Ratio
	Flow[a]	Temp	Required	Actual				of
Month	(mgd)	(^{o} C)		Pipe 1	Pipe 2	CT	Total	CT_a/CT_r
Jan	35.0	4	9.2	0.0	0.0	9.9	9.9	1.08
Feb	35.0	10	5.9	0.0	0.0	9.9	9.9	1.7
Mar	35.0	10	5.9	0.0	0.0	9.9	9.9	1.7
Apr	35.0	11	5.4	0.0	0.0	9.9	9.9	1.8
May	35.0	11	5.4	0.0	0.0	9.9	9.9	1.8
Jun	35.0	15	3.9	0.0	0.0	9.9	9.9	2.5
Jul	35.0	27	2.2	0.0	0.0	9.9	9.9	4.5
Aug	35.0	25	2.2	0.0	0.0	9.9	9.9	4.6
Sep	35.0	15	3.9	0.0	0.0	9.9	9.9	2.5
Oct	35.0	12	5.0	0.0	0.0	9.9	9.9	2.0
Nov	35.0	10	5.9	0.0	0.0	9.9	9.9	1.7
Dec	35.0	10	5.9	0.0	0.0	9.9	9.9	1.7

Water Quality

pH = 6 - 9
Chlorine Residual (mg/L) = 2.00

CT Volume

Filtrate Pipe from Filtration Building to Basin [Pipe 1]

Dia =	42	inches
Length =	0	feet
Volume =	0	gallons
T_{10}/T =	80%	

FW Pipe from Basin to 16 MGD Reservoir [Pipe 2]

Dia =	42	inches
Length =	0	feet
Volume =	0	gallons
T_{10}/T =	80%	

CT Basin

Channel Width	6.2	ft
Channel Length	208	ft
L/W	34	
Area =	2,559	sq ft
Minimum Depth =	**10.5**	ft
Total Volume =	201,024	gallons
AWWARF T_{10}/T =	**60%**	
Design T_{10}/T =	60%	
Safety Factor =	1.0	

Ref. AWWARF Improving Clearwell Design for CT Compliance; Figure 7.7

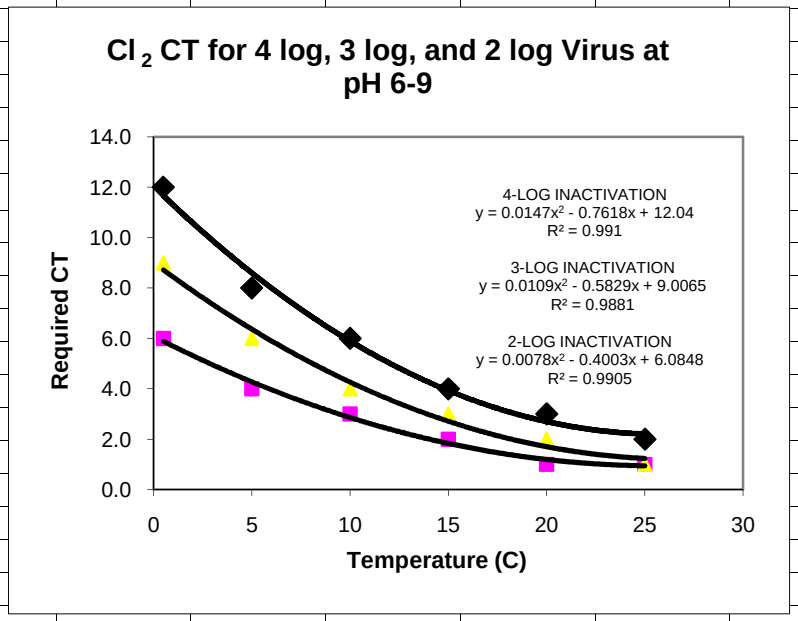

Source: EPA SWTR Guidance Manual
Table E-7

x	y	y	y
Temp	Required	Required	Required
(^{o} C)	4 -LOG CT	3 -LOG CT	2 -LOG CT
[t]	**[CT]**	**[CT]**	**[CT]**
0.5	12.0	9.0	6.0
5	8.0	6.0	4.0
10	6.0	4.0	3.0
15	4.0	3.0	2.0
20	3.0	2.0	1.0
25	2.0	1.0	1.0

APPENDIX L

Product Water Pump Station Calculations

Baker WTP
Product Water Pump Station
Hydraulic Calculations
TABLE L1 - Static Head Calculation

Static Head Condition				Comment
Clearwell Reservoir Minimum	595	(ft)	(Elev.)	Conservative, Min = 2 ft
Clearwell Reservoir Maximum	621	(ft)	(Elev.)	HWL
Maximum HGL of AMP =	806	(ft)	(Elev.)	
Minimum (Design) HGL of AMP =	690	(ft)	(Elev.)	

Static Head, **Low Head** Condition:	**69**	**(ft)**
Static Head, **High Head** Condition:	**211**	**(ft)**

AMP = Low HGL 690 to 630 ft handled by pressure reduction.

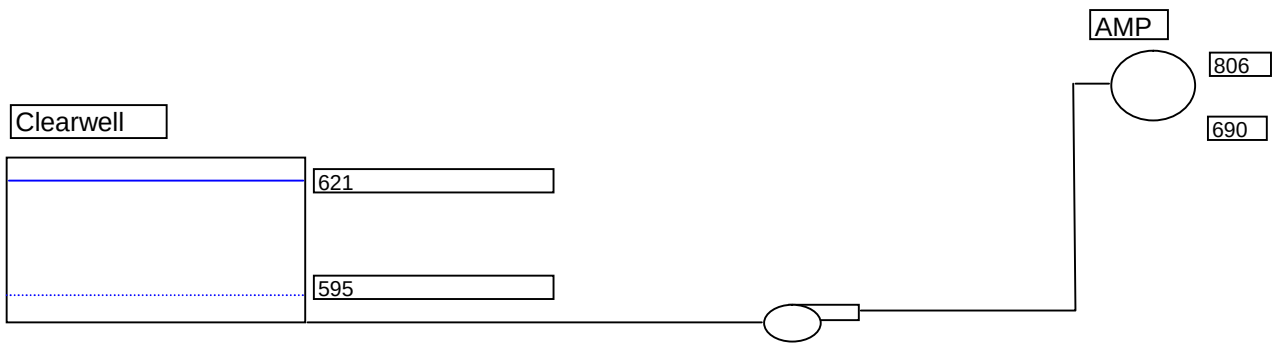

Baker WTP
Product Water Pump Station
Hydraulic Calculations
TABLE L2 - Pump Design Summary

Pump Requirements	Q =	14,800	gpm	=	33.0	cfs
Static Head	Low Static Head =	69	ft			
	High Static Head =	211	ft			
Suction Piping	Suction Losses =	10	ft @ Design Flow			
Discharge Piping	Friction Losses =	5	ft @ Design Flow			
	Minor Losses =	8	ft @ Design Flow			
Total Dynamic Head	TDH =	235	ft @ Design Flow (High Head Condition)			
Pump Efficiency	Efficiency =	82	% (Up to 86% depending on operation point)			
Pump Horsepower	hp =	300	per pump (4 duty - 1 back-up)			
Net Positive Suction Head	NPSHA =	39.5	ft			
	NPSHR [1] =	18.0	ft			

[1] Based on ITT Industries / Goulds Pump Model No. 18HMO.

APPENDIX M

IRWD – Process Equipment & Instrument Tag Guidelines

SEPTEMBER 2009

IRWD

PROCESS EQUIPMENT & INSTRUMENT TAG GUIDELINE

TABLE OF CONTENTS

Section Title

1. EQUIPMENT AND INSTRUMENT TAG FORMAT

EQUIPMENT

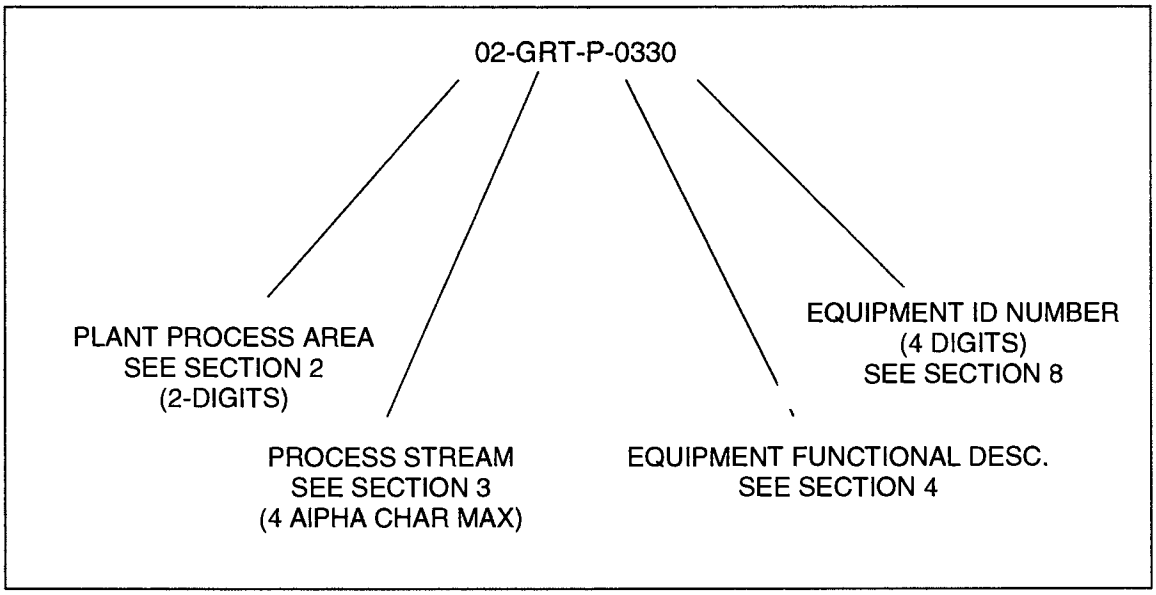

INSTRUMENTATION DEVICE AND SIGNALS

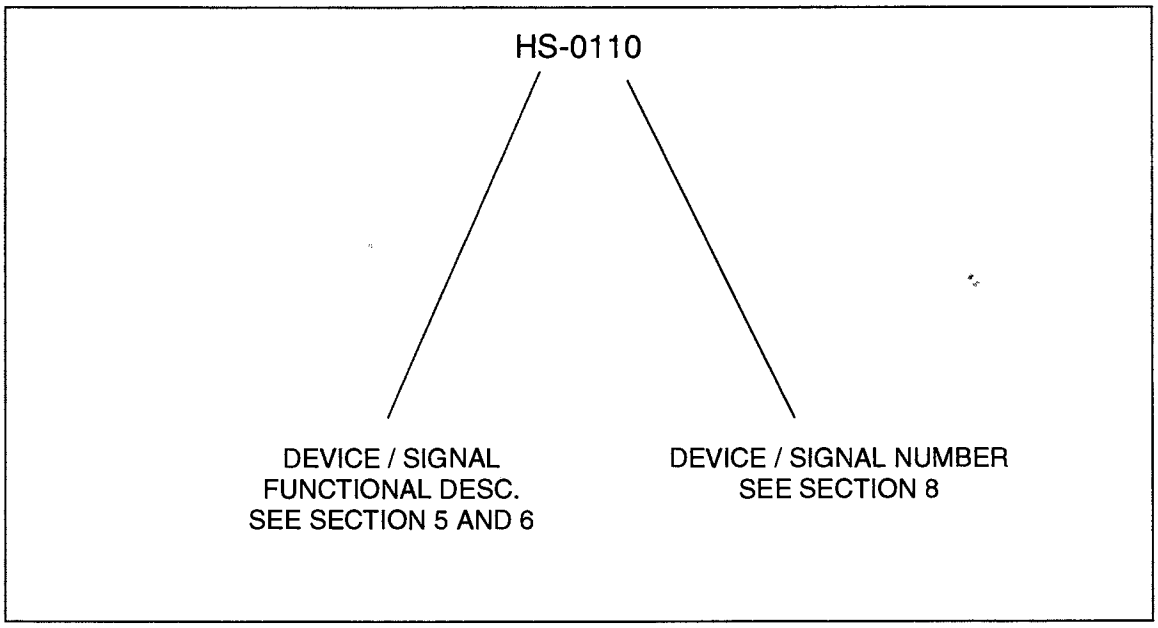

2. PLANT PROCESS AREAS

(The Plant Process Area does not denote a physical area, it identifies an entire plant process)

AREA NUM	EQUIPMENT DESCRIPTION
00	INFLUENT/RAW/PRETREATMENT
01	
02	
03	
04	
05	
06	
07	
08	
09	
10	
11	
12	
13	
14	
15	ELECTRICAL AND COMMUNICTATIONS
16	OFF-SITE (RTU) COMMUNICATIONS SIGNALS
17	MISCELLANEOUS AREAS
18	
19	

- 1 Process Area for CWEM

3. PLANT PROCESS STREAMS

ABBREVIATION	EQUIPMENT DESCRIPTION
AA	AQUA AMMONIA
BWS	BACKWASH SUPPLY
CA	COMPRESSED AIR
CF	RO CLEANING FEED
CLW	RO CLEANING WASTE
CR	RO CLEANING RETURN
CW	CLARIFIED WATER
D	DRAIN
FPW	FINAL PRODUCT WATER
FW	FILTERED WATER
OF	OVERFLOW
NRW	NON RECLAIMABLE WASTE
PCR	PERMEATE CLEANING RETURN
REC	RO CIP RECIRC
ROC	RO CONCENTRATE
ROF	RO FEED
ROP	RO PERMEATE
RW	RAW WATER
S	SEWER
SA	SULFURIC ACID
SD	STORM DRAIN
SH	SODIUM HYDOXIDE
SHC	SODIUM HYPOCHLORITE
SPD	SUMP PUMPED DRAIN
TI	THRESHOLD INHIBITOR
WT	POTABLE WATER
WBW	WASTE BACKWASH

4. EQUIPMENT FUNCTIONAL DESCRIPTIONS

ABBREVIATION	EQUIPMENT DESCRIPTION
AC	AIR CONDITIONING PACKAGE UNIT
AHU	AIR HANDLER
ATS	AUTOMATIC TRANSFER SWITCH
AV	AIR VAC
BAT	BATTERY BANK
BCH	BATTERY CHARGER
BCP	BRANCH CIRCUIT PANEL
BFV	BUTTERFLY VALVE
BKR	BREAKER (POWER)
BLV	BALANCING VALVE
BOL	BOILER
BPV	BACK PRESSURE VALVE
BSR	BARSCREEN, RAKE
BV	BALL VALVE
BWR	BLOWER
CEN	CENTRIFUGE
CF	CARTRIDGE FILTER
CHL	CHLORINATOR
CHR	CHILLER
CLF	CLARIFIER
CLR	COLLECTOR, SLUDGE OR SCUM
CMP	COMPRESSOR
CND	CONDENSOR
CON	CONTROLLER, MOTOR, ELECTRONIC
CRN	CRANE
CT	CURRENT TRANSFORMER
CTW	COOLING TOWER
CUB	CUBICLE
CV	CHECK VALVE
CVY	CONVEYOR
DG	DEGASSIFIER
DLN	DRIVE LINE
DP	DISTRIBUTION PANEL 480V OR 240V
DPR	RELAY, MACHINE DIFFERENTIAL
DRY	DRYER
EF	EXHAUST FAN
ELV	ELEVATOR
ENG	ENGINE
EVP	EVAPORATOR
EW	EYE WASH (SAFETY SHOWER)

ABBREVIATION	EQUIPMENT DESCRIPTION
EXR	EXCHANGER
F	FAN
FBK	FEEDER BREAKER
FIX	FIXTURE, LIGHTING
FLA	FLAME ARRESTOR
FLR	FLARE
FLT	FILTER
FLV	FLAPPER VALVE
FP	FEED PUMP
FRM	FRAME
FRQ	RELAY, FREQUENCY
FRX	FIRE EXTINGUISHER
GAT	GATE
GBK	GENERATOR BREAKER
GBX	GEARBOX
GDR	GRINDER
GEN	GENERATOR
GEX	GENERATOR EXCITER
GLV	GLOBE VALVE
GOP	GATE OPERATOR
GV	GATE VALVE
HTR	HEATER
IOC	RELAY, INSTANTANEOUS OVERCURRENT
IRC	IRRIGATION CONTROLLER
ITC	RELAY, INST/TIME OVERCURRENT
LER	RELAY, LOSS OF EXCITATION
LP	LIGHTING PANEL/LOW VOLTAGE PANEL
M	MECHANICAL EQUIPMENT
MBK	MAIN BREAKER
MCC	MOTOR CONTROL CENTER
MDRV	MAGNETIC DRIVE
MOV	MOTORIZED VALVE OPERATOR
MP	METERING PUMP
MS	MOTOR STARTER
MSB	MAIN SWITCH BOARD
MTG	METERING SECTION
MTR	MOTOR
MXR	MIXER
NSO	RELAY, NEGATIVE SEQUENCE OVERCURRENT
NV	NEEDLE VALVE
OPS	OPERATOR
CP	PANEL (CONTROL, FIELD)
P	PUMP
PD	PULSATION DAMPENER

ABBREVIATION	EQUIPMENT DESCRIPTION
PIPE	PIPING
PIV	PINCH VALVE
PM	POWER MONITOR
PRD	PRESSURE REDUCING VALVE
PRG	PRESSURE REGULATING VALVE
PRV	PRESSURE RELIEF VALVE
PRVB	PRESSURE RELIEF/VACUUM BREAKER
PTEQ	PORTABLE EQUIPMENT
PTS	POTENTIAL TRANSFORMER
PUR	PURIFIER
PV	PLUG VALVE
PVD	RELAY, DIFFERENTIAL VOLTAGE
PWR	RELAY, PILOT WIRE DIFFERENTIAL
PWS	RELAY, PILOT WIRE SENDING
REF	REFRIGERATOR, STORAGE
REG	REGULATOR
RLY	RELAY
RPD	REDUCED PRINCIPLE DEVICE
RPR	RELAY, POWER DIFFERENTIAL
SBD	RELAY, STATIC DIFFERENTIAL
SBK	STANDBY POWER BREAKER
SBR	SCRUBBER
SCPR	SERVICE CONNECTION PRESSURE REGULATOR
SF	SUPPLY FAN
SFR	RELAY, STATIC FREQUENCY
SOF	SOFTENER
SPR	SEPARATOR
STR	STRAINER
STRC	STRUCTURE
SV	SOLENOID VALVE
SWBD	SWITCHBOARD
SWGR	SWITCHGEAR
SWI	SWITCH
SWP	SWEEP ARM ASSEMBLY
SYN	RELAY, SYNC CHECK
TBC	TURBOCHARGER
TBK	TIE BREAKER
TCV	TROTTLE CONTROL VALVE
TK	TANK
TOC	RELAY, TIME OVERCURRENT
TOU	RELAY, TIME OVER/UNDER VOLTAGE
TRP	TRAP
TSV	TELESCOPING VALVE
TUR	TURBINE
TUV	RELAY, TIME VOLTAGE

ABBREVIATION	EQUIPMENT DESCRIPTION
TWR	TOWER (SURGE)
UPS	UNINTERRUPTABLE POWER SUPPLY
UVS	RELAY, UNDER VOLTAGE AND PHASE SEQUENCE
VB	VACUUM BREAKER (WATER)
VBR	RELAY, VOLTAGE BALANCE
VDC	DOUBLE CHECK VALVE (FIRE SYSTEM)
VEHL	VEHICLE
VFD	VARIABLE FREQUENCY DRIVE
VKG	KNIFE GATE VALVE
VNTV	VENT VALVE
VRD	RELAY, RESTRAINED DIRECTIONAL OVERCURRENT
XFMR	TRANSFORMER

5. DEVICE / SIGNAL FUNCTIONAL DESCRIPTION

Following is a table of abbreviations for signal functional identification. The table is a comprehensive list of many types of signals and devices.

Following the comprehensive table section in Section 6 is a list of commonly used abbreviations. These are shown in the sample P & IDs that are also provided in this document.

	Controllers				Readout Devices		Switches and Alarm Devices										Transmitter								
Initiating or Measured Variable	Recording	Indicating	Blind	Self Actuated Control Valves	Recording	Indicating	Alarm High	Alarm High/High	Switch High	Switch High/High	Alarm Low	Alarm Low/Low	Switch Low	Switch Low/Low	Alarm Comb	Switch Comb	Recording	Indicating	Blind	Solenoids, Relays,	Primary Elements	Test Point	Well or Probe	Viewing Device or Glass	Safety Device
Analysis	ARC	AIC	AC		AR	AI	AAH	AAHH	ASH	ASHH	AAL	AALL	ASL	ASLL	AAHL	ASHL	ART	AIT	AT	AY	AE	AP	AW		
Burner/ Combustion	BRC	BIC	BC		BR	BI	BAH	BAHH	BSH	BSHH	BAL	BALL	BSL	BSLL	BAHL	BSHL	BRT	BIT	BT	BY	BE		BW	BG	
Density	DRC	DIC	DC	DCV	DR	DI	DAH	DAHH	DSH	DSHH	DAL	DALL	DSL	DSLL	DAHL	DSHL	DRT	DIT	DT	DY	DE	DP			
Voltage	ERC	EIC	EC		ER	EI	EAH	EAHH	ESH	ESHH	EAL	EALL	ESL	ESLL	EAHL	ESHL	ERT	EIT	ET	EY	EE				
Flow Rate	FRC	FIC	FC	FCV, FICV	FR	FI	FAH	FAHH	FSH	FSHH	FAL	FALL	FSL	FSLL	FAHL	FSHL	FRT	FIT	FT	FY	FE	FP		FG	
Flow Quantity	FQRC	FQIC			FQR	FQI	FQAH	FQAH	FQSH	FQSH	FQAL	FQAL	FQSL	FQSL	FQHL			FQIT	FQT	FQY	FQE				
Flow Ratio	FFRC	FFIC	FFC		FFR	FFI	FFAH	FFAH	FFSH	FFSH	FFAL	FFAL	FFSL	FFSL	FFHL										
Hand		HIC	HC						HSH	HSH			HSL	HSLL											
Current	IRC	IIC			IR	II	IAH	IAHH	ISH	ISHH	IAL	IALL	ISL	ISLL	IAHL	ISHL	IRT	IIT	IT	IY	IE				
Power	JRC	JIC			JR	JI	JAH	JAHH	JSH	JSHH	JAL	JALL	JSL	JSLL	JAHL	JSHL	JRT	JIT	JT	JY	JE				
Time	KRC	KIC	KC	KCV	KR	KI	KAH	KAHH	KSH	KSHH	KAL	KALL	KSL	KSLL	KAHL	KSHL	KRT	KIT	KT	KY	KE				
Level	LRC	LIC	LC	LCV	LR	LI	LAH	LAHH	LSH	LSHH	LAL	LAL	LSL	LSL	LAHL	LSHL	LRT	LIT	LT	LY	LE		LW	LG	
Moisture	MRC	MIC	MC		MR	MI	MAH	MAHH	MSH	MSHH	MAL	MALL	MSL	MSLL	MAHL	MSHL	MRT	MIT	MT	MY	ME	MP	MW		
Pressure	PRC	PIC	PC	PCV	PR	PI	PAH	PAHH	PSH	PSHH	PAL	PALL	PSL	PSLL	PAHL	PSHL	PRT	PIT	PT	PY	PE	PP			PSV, PSE
Pressure Differential	PDRC	PDIC	PDC	PDCV	PDR	PDI	PDAH	PDAH	PDSH	PDSH	PDAL	PDAL	PDSL	PDSL			PDRT	PDIT	PDT	PDY	PE	PP			
Quantity	QRC	QIC			QR	QI	QAH	QAHH	QSH	QSHH	QAL	QALL	QSL	QSLL	QAHL	QSHL	QRT	QIT	QT	QY	QE				
Radiation	RRC	RIC	RC		RR	RI	RAH	RAHH	RSH	RSHH	RAL	RALL	RSL	RSLL	RAHL	RSHL	RRT	RIT	RT	RY	RE		RW		
Speed	SRC	SIC	SC	SCV	SR	SI	SAH	SAHH	SSH	SSHH	SAL	SALL	SSL	SSLL	SAHL	SSHL	SRT	SIT	ST	SY	SE				
Temperature	TRC	TIC	TC	TCV	TR	TI	TAH	TAHH	TSH	TSHH	TAL	TALL	TSL	TSLL	TAHL	TSHL	TRT	TIT	TT	TY	TE	TP	TW		TSE

	Controllers				Readout Devices		Switches and Alarm Devices										Transmitter								
Initiating or Measured Variable	**Recording**	**Indicating**	**Blind**	**Self Actuated Control Valves**	**Recording**	**Indicating**	**Alarm High**	**Alarm High/High**	**Switch High**	**Switch High/High**	**Alarm Low**	**Alarm Low/Low**	**Switch Low**	**Switch Low/Low**	**Alarm Comb**	**Switch Comb**	**Recording**	**Indicating**	**Blind**	**Solenoids, Relays,**	**Primary Elements**	**Test Point**	**Well or Probe**	**Viewing Device or Glass**	**Safety Device**
Temperature Differential	TDRC	TDIC	TDC	TDCV	TDR	TDI	TDAH	TDAH	TDSH	TDSH	TDAL	TDAL	TDSL	TDSL			TDRT	TDIT	TDT	TDY	TE	TP	TW		
PLC/MMI																				UY					
Vibration/Machinery Analysis	VRC	VIC	VC		VR	VI	VAH	VAHH	VSH	VSHH	VAL	VALL	VSL	VSLL	VAHL	VSHL	VRT	VIT	VT	VY	VE				
Weight/Force	WRC	WIC	WC		WR	WI	WAH	WAHH	WSH	WSHH	WAL	WALL	WSL	WSLL	WAHL	WSHL	WRT	WIT	WT	WY	WE				
Weight/Force Differential	WDRC	WDIC	WDC		WDR	WDI	WDAH	WDAH	WDSH	WDSH	WDAL	WDAL	WDSL	WDSL			WDRT	WDIT	WDT	WDY	WE				
Event/State/ Presence	YRC	YIC	YC		YR	YI	YAH	YAHH	YSH	YSHH	YAL	YAL	YSL	YSL	YAHL	YSHL			YT	YY	YE				
Posistion/Dimension	ZRC	ZIC	ZC	ZCV	ZR	ZI	ZAH	ZAHH	ZSH	ZSHH	ZAL	ZAL	ZSL	ZSL	ZAHL	ZSHL	ZRT	ZIT	ZT	ZY	ZE				
Gauging/Deviation	ZDRC	ZDIC	ZDC	ZDCV	ZDR	ZDI	ZDAH	ZDAH	ZDSH	ZDSH	ZDAL	ZDAL	ZDSL	ZDSL			ZDRT	ZDIT	ZDT	ZDY	ZDE				

6. COMMONLY USED DEVICE AND SIGNAL FUNCTIONAL IDENTIFICATION

Following is a table of abbreviations for signal functional identification. The table is a comprehensive list of many types of signals and devices.

Following the comprehensive table section in Section 6 is a list of commonly used abbreviations. These are shown in the sample P & IDs that are also provided in this document.

TAG	DESCRIPTION
	DISCRETE DEVICES:
HI	SELECTOR SWITCH STATUS (REMOTE-LOACL)
HK	OUTPUT TO EQUIPMENT (e.g. PUMP CALL, VALVE OPEN/CLOSE COMMAND)
HS	HAND SWITCH – FIELD DEVICE
YI	STATUS INDICATION (MOTOR RUN STATUS)
YN	DATA LINK (MODBUS, MODBUS PLUS)
ZI	POSITION FEEDBACK SIGNAL
ASH	ANALYZER VALUE - HIGH
ASL	ANALYZER VALUE - LOW
FSH	FLOW HIGH SWITCH
FSL	FLOW LOW SWITCH
HKC	OUTPUT TO A VALVE TO CLOSE
HKO	OUTPUT TO A VALVE TO OPEN
LSH	LEVEL SWITCH HIGH
LSL	LEVEL SWITCH LOW
ZSC	CLOSED POSITION SWITCH
ZSO	OPEN POSITION SWITCH
UA	DEVICE FAIL (MOTOR OVERLOAD, COMMON FAIL OR ALARM)
YI	RUNNING STATUS (MOTOR)
	ALARMS:
LA	LEVEL ALARM
PA	PRESSURE ALARM
TA	TEMPERATURE ALARM
EA	POWER FAIL ALARM
UA	EQUIPMENT FAIL OR ALARM
LAH	LEVEL ALARM HIGH
LAL	LEVEL ALARM LOW

TAG	DESCRIPTION
	CONTROL SIGNALS:
SC	SPEED CONTRL (ANALOG SIGNAL TO VFD)
FC	FLOW CONTROL (ANALOG SIGNAL TO FCV)
ZC	POSITION CONTROL (ANALOG SIGNAL TO VALVE)
FSP	FLOW SETPOINT
RSP	REMOTE SETPOINT
	INSTRUMENTATION:
FI	FLOW RATE INDICATING TRANSMITTER (ANALOG SIGNAL)
PI	PRESSURE (ANALOG SIGNAL)
SI	SPEED (ANALOG SIGNAL)
ZI	POSITION (ANALOG SIGNAL)
AE	ANALYTICAL INSTRUMENTATION DEVICE
	SOFTWARE CALCULATED VALUES:
FQI	FLOW TOTAL
KQI	MOTOR RUN TIME TOTAL
KQR	MOTOR NUMBER OF STARTS
	DATA NETWORK CONNECTIONS:
YN	DATA LINK (MODBUS, MODBUS PLUS, ETHERNET, SERIAL DATA)
	SWITCH DEVICES
HA	HAND-AUTO
HOA	HAND-OFF-AUTO
HSC	HAND SWITCH COMPUTER
LOR	LOCAL-OFF-REMOTE
OAC	OPEN-AUTO-CLOSE
OO	ON-OFF
OOA	ON-OFF-AUTO
OOR	ON-OFF-REMOTE
OSC	OPEN-STOP-CLOSE
OSCA	OPEN-STOP-CLOSE-AUTO
	OTHER DEVICES/EQUIPMENT
PLC	PROGRAMMABLE LOGIC CONTROLLER
RTU	REMOTE TERMINAL UNIT
SCS	SUPERVISORY CONTROL STATION
TSP	TWISTED SHIELDED PAIR
TTR	TONE TELEMETRY RECEIVER
TTT	TONE TELEMETRY TRANSMITTER

7. STANDARD DEVICE AND SIGNAL PLC I/O IDENTIFICATION

Following is a table of abbreviations for typical signal identification for the PLC I/O for typical equipment.

The I/O shown in the table matches the typical equipment schematics and PLC programming templates for the equipment.

PUMP (CONSTANT SPEED)			
	HI-001	DI	Station Pump 1 In Remote
	YI-001	DI	Station Pump 1 Run Status
	UA-001	DI	Station Pump 1 Fail
	HI-001A	DI	Station Pump 1 TOU Key Switch Status
	YI-001A	DI	Station Pump 1 TOU Relay Status
	PAHL-001	DI	Station Pump 1 Hi/Lo Disch. Pressure Alarm
	PAL-001	DI	Station Pump 1 Low Suction Pressure Alarm
	UA-001A	DI	Station Pump 1 Alarm
	HK-001	DO	Station Pump 1 Run Command
	HK-001A	DO	Station Pump 1 TOU Lockout Command
PUMP (VARIABLE SPEED)			
	HI-001	DI	Station Pump 1 In Remote
	YI-001	DI	Station Pump 1 Run Status
	UA-001	DI	Station Pump 1 Fail
	HI-001A	DI	Station Pump 1 TOU Key Switch Status
	YI-001A	DI	Station Pump 1 TOU Relay Status
	PAHL-001	DI	Station Pump 1 Hi/Lo Disch. Pressure Alarm
	PAL-001	DI	Station Pump 1 Low Suction Pressure Alarm
	UA-001A	DI	Station Pump 1 Alarm
	HK-001	DO	Station Pump 1 Run Command
	HK-001A	DO	Station Pump 1 TOU Lockout Command
	SI-001	AI	Station Pump 1 Speed
	SC-001	AO	Station Pump 1 Speed Command
VALVE (OPEN/CLOSED)			
	HI-001	DI	Valve In Remote
	ZSO-110	DI	Valve Open Position
	ZSC-110	DI	Valve Closed Position
	HKO-110	DO	Valve Open Command
	HKC-110	DO	Valve Closed Command

VALVE (MODULATING)			
	HI-110	DI	Valve In Remote
	ZI-110	AI	Valve Position
	FC-110	AO	Valve Position Command (flow control)
other control	LC-110	AO	Valve Position Command (level control)
commands:	PC-110	AO	Valve Position Command (pressure control)
	ZC-110	AO	Valve Position Command (position control)
PRESSURE REDUCING VALVE VAULT			
	ZSC-10	DI	Zone x-y PRV Large Valve Closed Position
	ZSC-20	DI	Zone x-y PRV Small Valve Closed Position
	PT-20	AI	Zone x-y PRV Upstream Pressure
	PT-10	AI	Zone x-y PRV Downstream Pressure
SURGE TANK			
	LSHH-209	DI	Suction Surge Tank Level High Alarm
	LSLL-209	DI	Suction Surge Tank Level Low Alarm
	UA-209	DI	Suction Surge Tank Control Panel Alarm
AIR COMPRESSOR			
	YI-303	DI	Air Compressor Run Status
	PSLL-301	DI	Compressed Air Low Pressure
UNINTERRUPTIBLE POWER SUPPLY			
LOOP - 08	EA-725	DI	UPS System Fail
	YI-725	DI	UPS System On Batteries
STATION POWER			
LOOP - 09	EA-731	DI	Station Power Phase Loss
MCC POWER LOSS			
LOOP - 09	EA-731	DI	Station Power Phase Loss
INTRUSION DETECTION			
LOOP - 10	ZSC-712	DI	Station Intrusion Door Status -
	HI-713	DI	Station Intrusion Override Switch -

8. PANEL IDENTIFICATION

TAG	DESCRIPTION
CP	CONTROL PANEL
LCP	LOCAL CONTROL PANEL
FOP	FIBER OPTIC PANEL
MCP	MASTER CONTROL PANEL (MWRP)
TDB	TUBE DISTRIBUTION BOX

Use numbering for panels which correspond to the general plant process area location of the equipment.

Example:

9. MCC IDENTIFICATION

Use numbering for MCC which correspond to the general plant process area location of the equipment.

Example:

10. MANHOLE AND PULL BOX IDENTIFICATION

TAG	DESCRIPTION
MH	MANHOLE
PB	PULL BOX
JB	JUNCTION BOX

Use numbering for manholes and boxes which correspond to the to the general plant process area location of the equipment.

Example:

11. EQUIPMENT, DEVICE & INSTRUMENT NUMBER

1 Process Plants:

Typically use 4 digits for process plant:

- MWRP
- LAWRP
- DATS
- PTP
- Baker Plant

Refer to P & ID sheets attached for examples of process plant equipment numbering sequences.

2 Water Distribution and Collections Facilities:

Typically use 3 digits for water distribution, collections, and similar facilities:

A. Booster Pump Station:

001-004	Typically used for pumps in the station (pump 1, 2, 3, 4 – not 101, 102 or 100, 200, etc.)
100-199	Low pressure (suction/downstream) side of the station
200-299	High pressure (discharge/upstream) side of the station
300-399	Process equipment not directly in the main process (air compressor for example)
700-799	Facility equipment (power, doors, lighting, UPS)

B. Reservoir:

10	Inlet valve equipment
20	Outlet valve equipment
100-199	Reservoir process (level transmitter, level floats, overflow float, etc.)

700-799 Facility equipment (hatches, power, etc.)

C. PRV:

10-19 Small Valve or downstream process

20-29 Large Valve equipment of upstream process

3 P & ID PROCESS AND EQUIPMENT NUMBERING EXAMPLES

(SEE ATTACHED P&ID SHEETS)

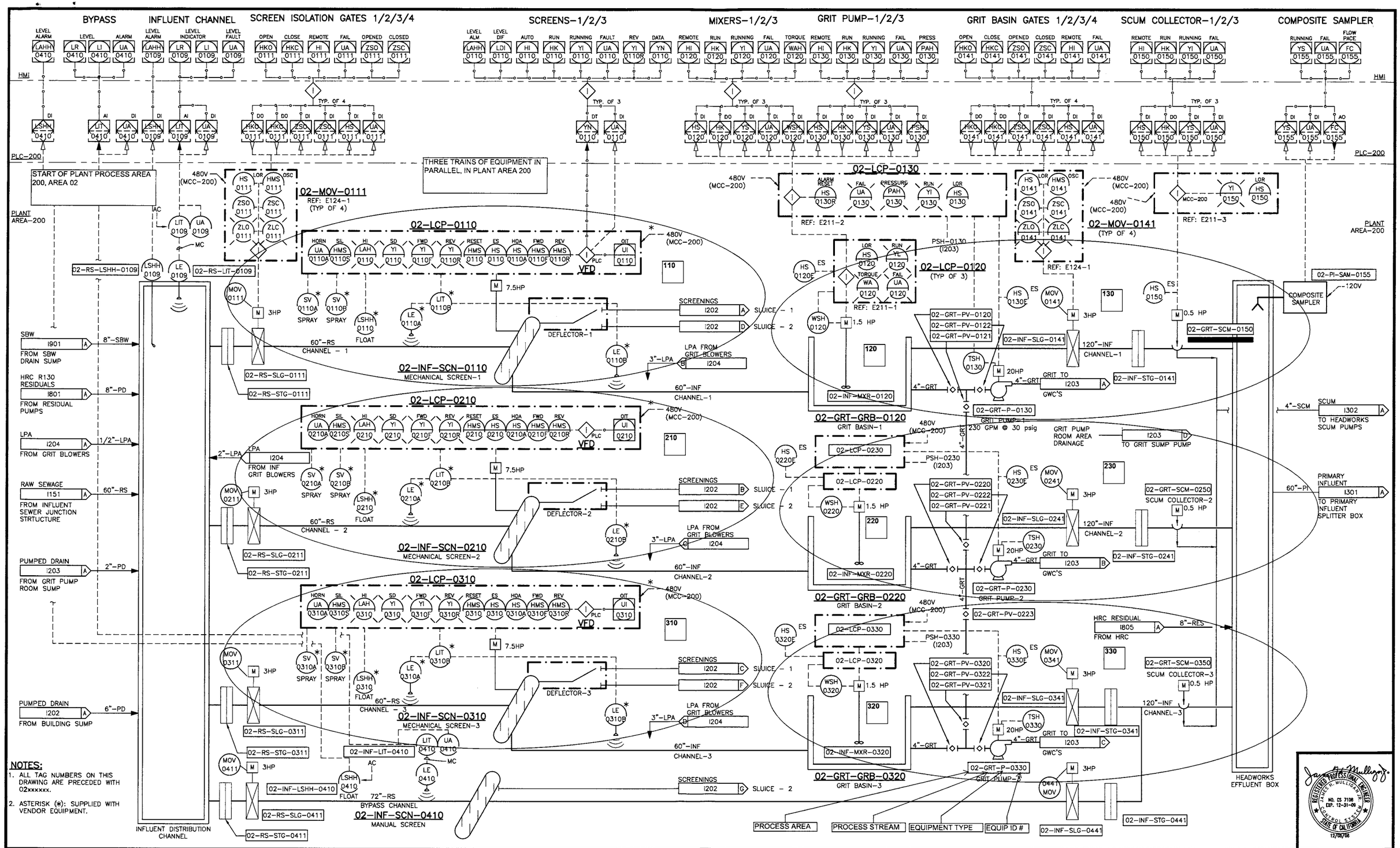

NOTES:

1. ALL TAG NUMBERS ON THIS DRAWING ARE PRECEDED WITH 02xxxxxx.
2. ASTERISK (*): SUPPLIED WITH VENDOR EQUIPMENT.

No.	DATE	REVISIONS	APP'D
–	–	–	

DESIGNED: G. BARELA
DRAWN: B. PARKS
CHECKED: J. MULLIGAN

HDR
HDR Engineering, Inc.
3230 El Camino Real
Suite 200
Irvine, California 92602-1377

BRUCE R. WILLEY — HDR PROJECT ENGINEER — RCE 33687 — DATE 12/08/08
STEVEN L. MALLOY — IRWD PRINCIPAL ENGINEER — RCE 31926 — DATE 12/17/08

IRVINE RANCH WATER DISTRICT

IRVINE RANCH WATER DISTRICT
MWRP PHASE 2 EXPANSION
PROJECT NUMBERS 20214 & 30214

VERIFY SCALE
BAR IS ONE INCH ON ORIGINAL DRAWING
0 1"
IF NOT ONE INCH ON THIS SHEET, ADJUST SCALE ACCORDINGLY.

P&ID HEADWORKS SCREENS AND GRIT BASINS

DRAWING 1201
SHEET 569 OF 628

REGISTERED PROFESSIONAL ENGINEER — JAMES R. MULLIGAN, JR. — NO. C5 7108 — EXP. 12-31-09 — CONTROL SYSTEMS — STATE OF CALIFORNIA — 12/08/08

CONFORMED DOCUMENT

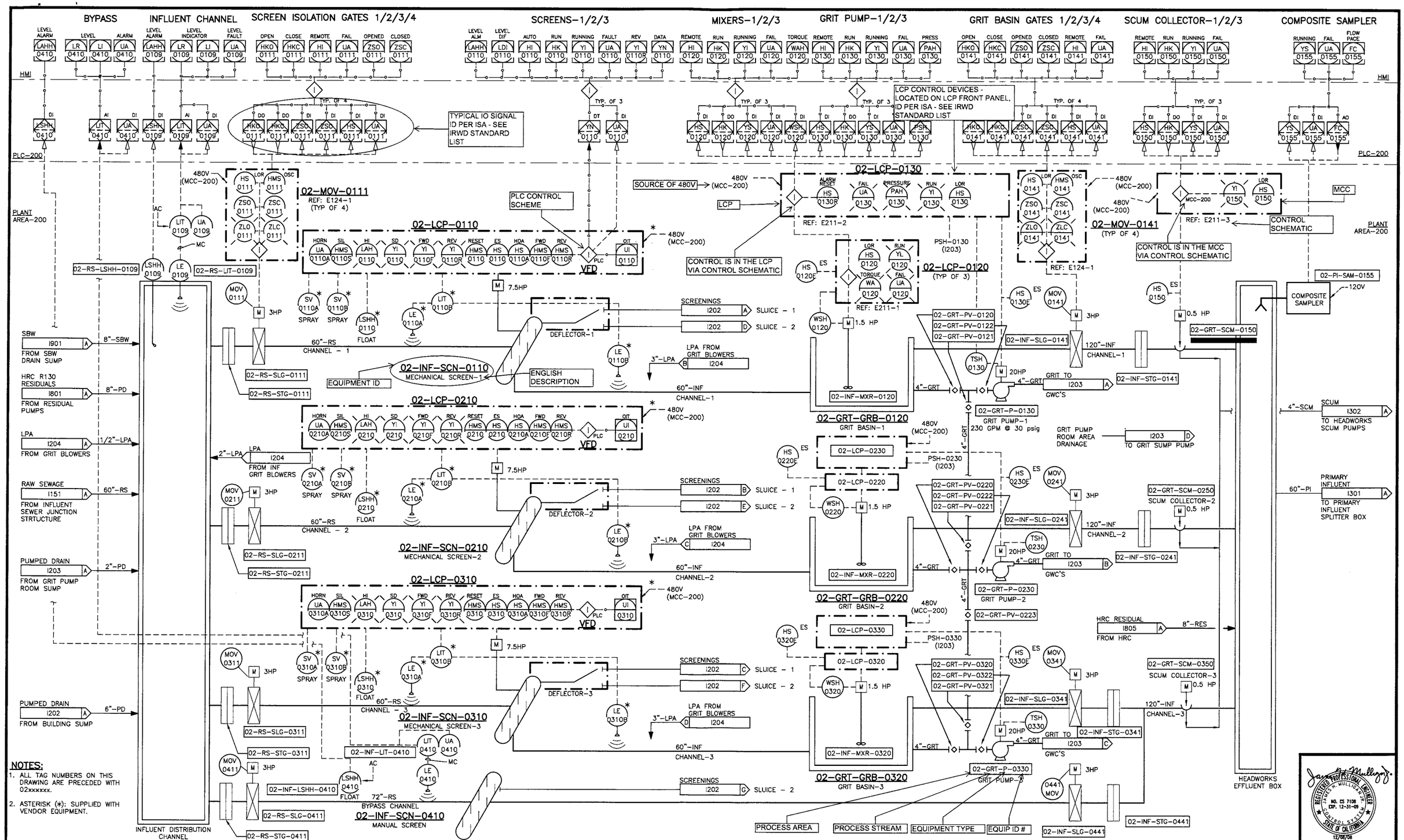

CONFORMED DOCUMENT

NOTES:

1. ALL TAG NUMBERS ON THIS DRAWING ARE PRECEDED WITH 02xxxxxx.
2. ASTERISK (*): SUPPLIED WITH VENDOR EQUIPMENT.

No.	DATE	REVISIONS	APP'D
–	–	–	

DESIGNED: G. BARELA
DRAWN: B. PARKS
CHECKED: J. MULLIGAN

HDR
HDR Engineering, Inc.
3230 El Camino Real
Suite 200
Irvine, California 92602-1377

BRUCE R. WILLEY — HDR PROJECT ENGINEER RCE 33687 — DATE 12/08/08
STEVEN L. MALLOY — IRWD PRINCIPAL ENGINEER RCE 31926 — DATE 12/17/08

IRVINE RANCH WATER DISTRICT

IRVINE RANCH WATER DISTRICT
MWRP PHASE 2 EXPANSION
PROJECT NUMBERS 20214 & 30214

VERIFY SCALE
BAR IS ONE INCH ON ORIGINAL DRAWING
0 1"
IF NOT ONE INCH ON THIS SHEET, ADJUST SCALE ACCORDINGLY.

P&ID HEADWORKS SCREENS AND GRIT BASINS

DRAWING 1201
SHEET 569 OF 628

REGISTERED PROFESSIONAL ENGINEER — JAMES A. MULLIGAN JR. — NO. CS 7108 — EXP. 12-31-09 — CIVIL — STATE OF CALIFORNIA — 12/08/08

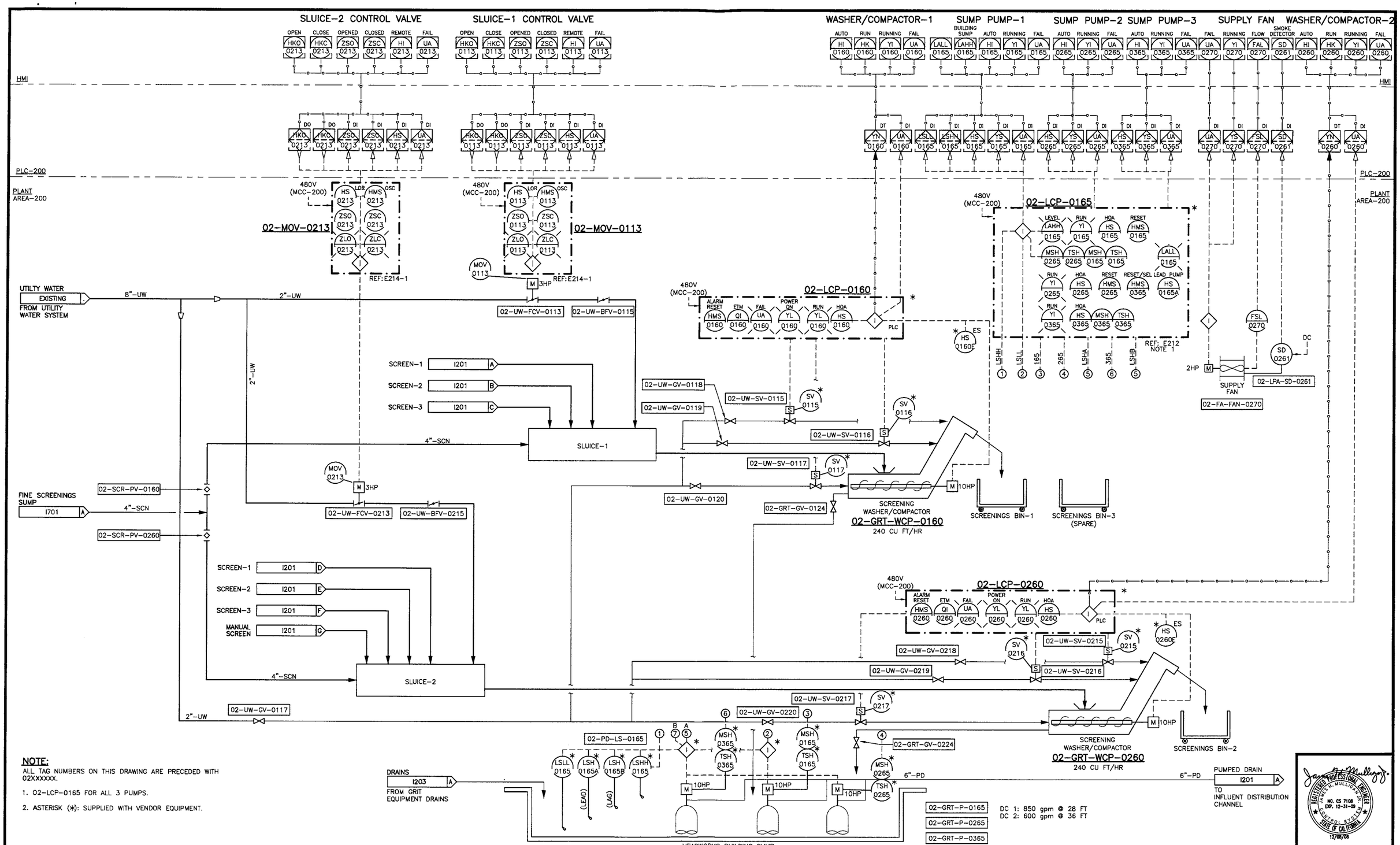

CONFORMED DOCUMENT

NOTE:

ALL TAG NUMBERS ON THIS DRAWING ARE PRECEDED WITH 02XXXXXX.

1. 02-LCP-0165 FOR ALL 3 PUMPS.
2. ASTERISK (*): SUPPLIED WITH VENDOR EQUIPMENT.

No.	DATE	REVISIONS	APP'D
–	–	–	

DESIGNED: G. BARELA
DRAWN: R. LEVELL
CHECKED: J. MULLIGAN

HDR
HDR Engineering, Inc.
3230 El Camino Real
Suite 200
Irvine, California 92602-1377

BRUCE R. WILLEY — HDR PROJECT ENGINEER — RCE 33687 — DATE 12/08/08
STEVEN L. MALLOY — IRWD PRINCIPAL ENGINEER — RCE 31926 — DATE 12/17/08

IRVINE RANCH WATER DISTRICT

IRVINE RANCH WATER DISTRICT
MWRP PHASE 2 EXPANSION
PROJECT NUMBERS 20214 & 30214

VERIFY SCALE
BAR IS ONE INCH ON ORIGINAL DRAWING
0 1"
IF NOT ONE INCH ON THIS SHEET, ADJUST SCALE ACCORDINGLY.

P&ID HEADWORKS
SCREENINGS PROCESSING

DRAWING 1202
SHEET 570 OF 628

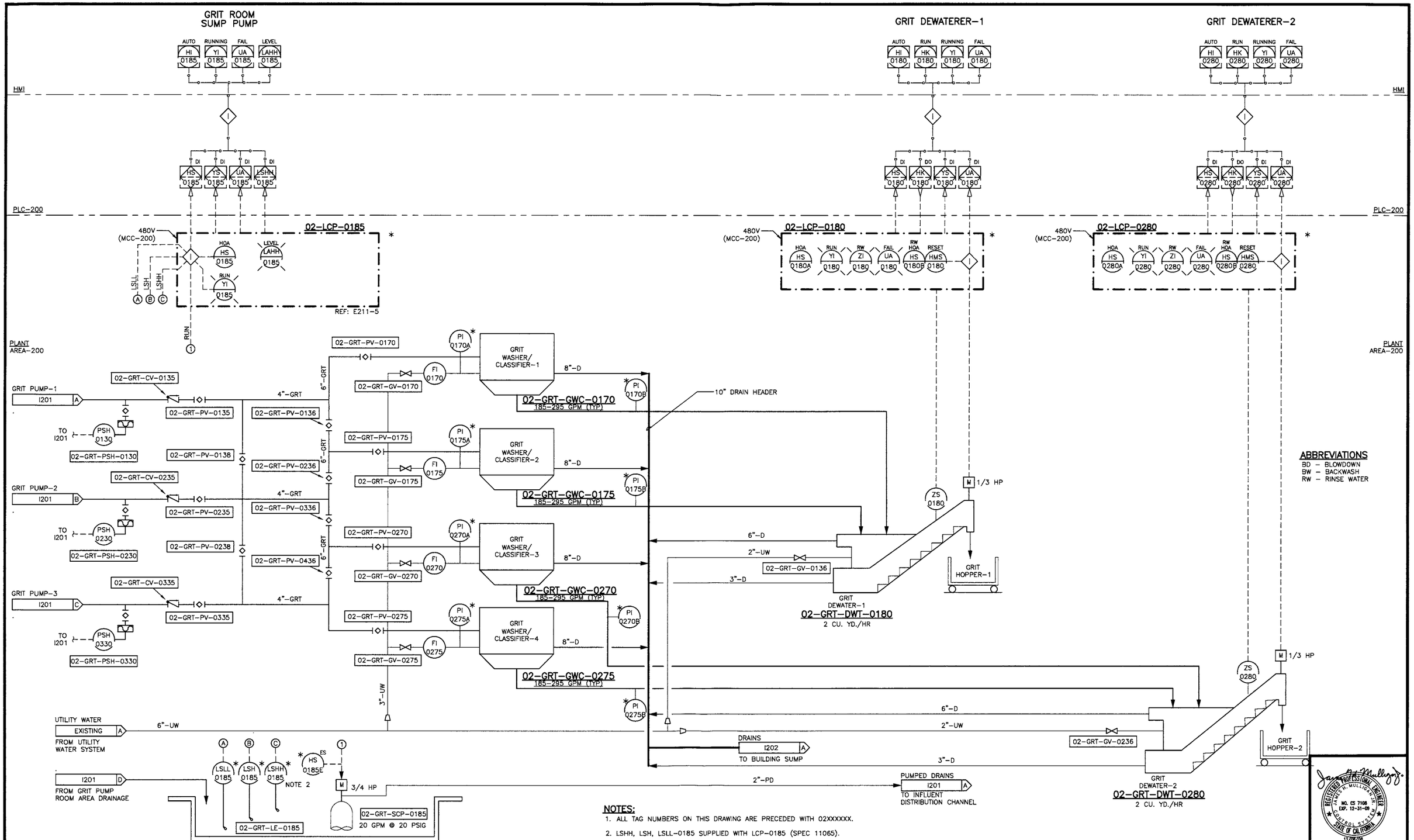

NOTES:

1. ALL TAG NUMBERS ON THIS DRAWING ARE PRECEDED WITH 02XXXXXX.
2. LSHH, LSH, LSLL-0185 SUPPLIED WITH LCP-0185 (SPEC 11065).
3. ASTERISK (*): SUPPLIED WITH VENDOR EQUIPMENT.

No.	DATE	REVISIONS	APP'D
–	–	–	

DESIGNED: G. BARELA
DRAWN: R. LEVELL
CHECKED: J. MULLIGAN

HDR
HDR Engineering, Inc.
3230 El Camino Real
Suite 200
Irvine, California 92602-1377

BRUCE R. WILLEY — HDR PROJECT ENGINEER RCE 33687 — DATE 12/08/08
STEVEN L. MALLOY — IRWD PRINCIPAL ENGINEER RCE 31926 — DATE 12/17/08

IRVINE RANCH WATER DISTRICT

IRVINE RANCH WATER DISTRICT
MWRP PHASE 2 EXPANSION
PROJECT NUMBERS 20214 & 30214

VERIFY SCALE
BAR IS ONE INCH ON ORIGINAL DRAWING
0 1"
IF NOT ONE INCH ON THIS SHEET, ADJUST SCALE ACCORDINGLY.

P&ID HEADWORKS
GRIT PROCESSING

DRAWING 1203
SHEET 571 OF 628

REGISTERED PROFESSIONAL ENGINEER JAMES R. MULLIGAN NO. CS 7108 EXP. 12-31-09 CONTROL SYSTEMS STATE OF CALIFORNIA 12/08/08

CONFORMED DOCUMENT

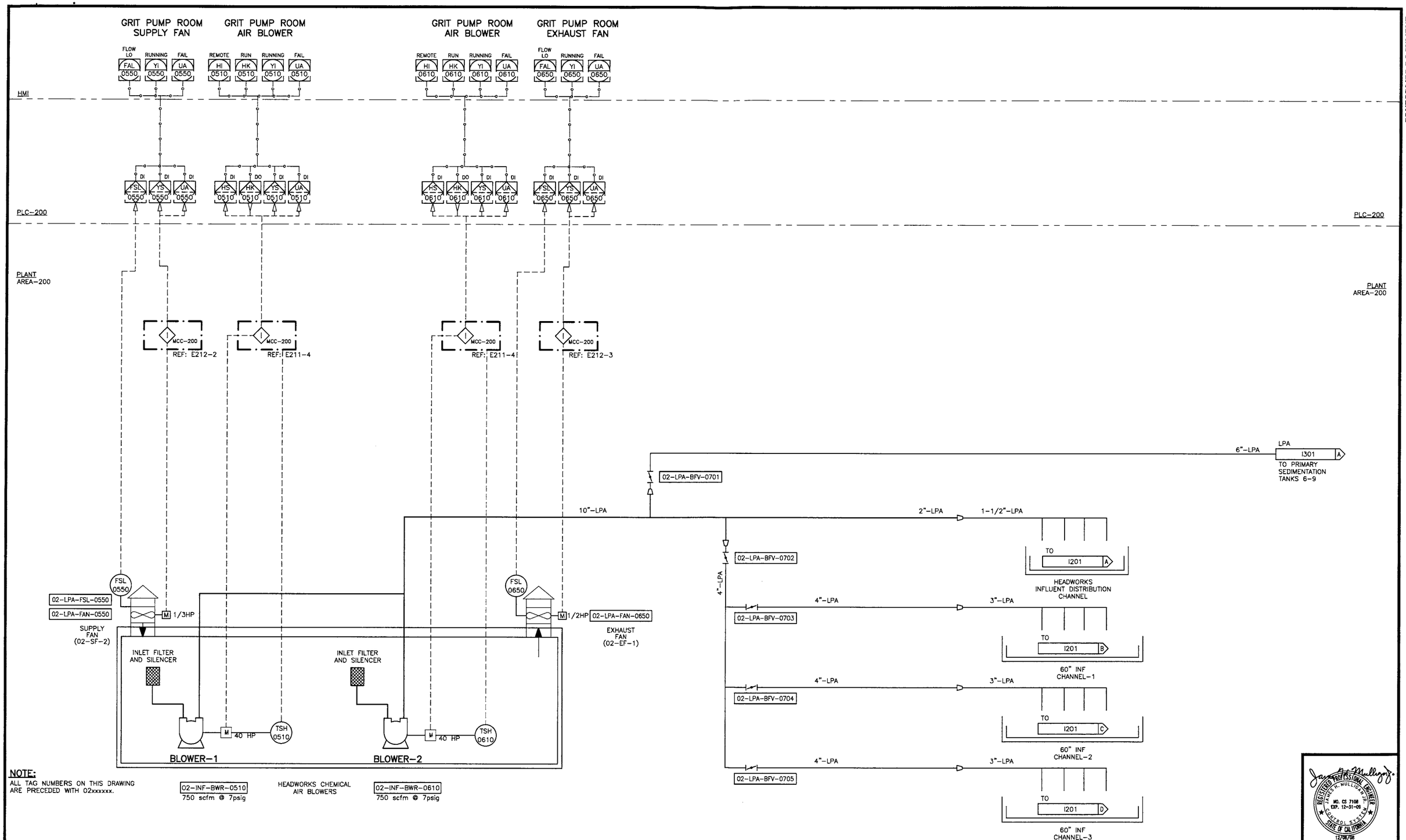

NOTE:
ALL TAG NUMBERS ON THIS DRAWING ARE PRECEDED WITH 02xxxxxx.

CONFORMED DOCUMENT

REGISTERED PROFESSIONAL ENGINEER JAMES R. MULLIGAN NO. CS 7108 EXP. 12-31-09 CONTROL SYSTEMS STATE OF CALIFORNIA 12/08/08

No.	DATE	REVISIONS	APP'D
2	–	CONFORMED DOCUMENT	–

DESIGNED: G. BARELA
DRAWN: B. PARKS
CHECKED: J. MULLIGAN

HDR
HDR Engineering, Inc.
3230 El Camino Real
Suite 200
Irvine, California 92602-1377

BRUCE R. WILLEY — HDR PROJECT ENGINEER — RCE 33687 — DATE 12/08/08
STEVEN L. MALLOY — IRWD PRINCIPAL ENGINEER — RCE 31926 — DATE 12/17/08

IRVINE RANCH WATER DISTRICT

IRVINE RANCH WATER DISTRICT
MWRP PHASE 2 EXPANSION
PROJECT NUMBERS 20214 & 30214

VERIFY SCALE
BAR IS ONE INCH ON ORIGINAL DRAWING
0 1"
IF NOT ONE INCH ON THIS SHEET, ADJUST SCALE ACCORDINGLY.

P&ID HEADWORKS SCREENS AND GRITS
LOW PRESSURE AIR SYSTEM

DRAWING 1204
SHEET 572 OF 628

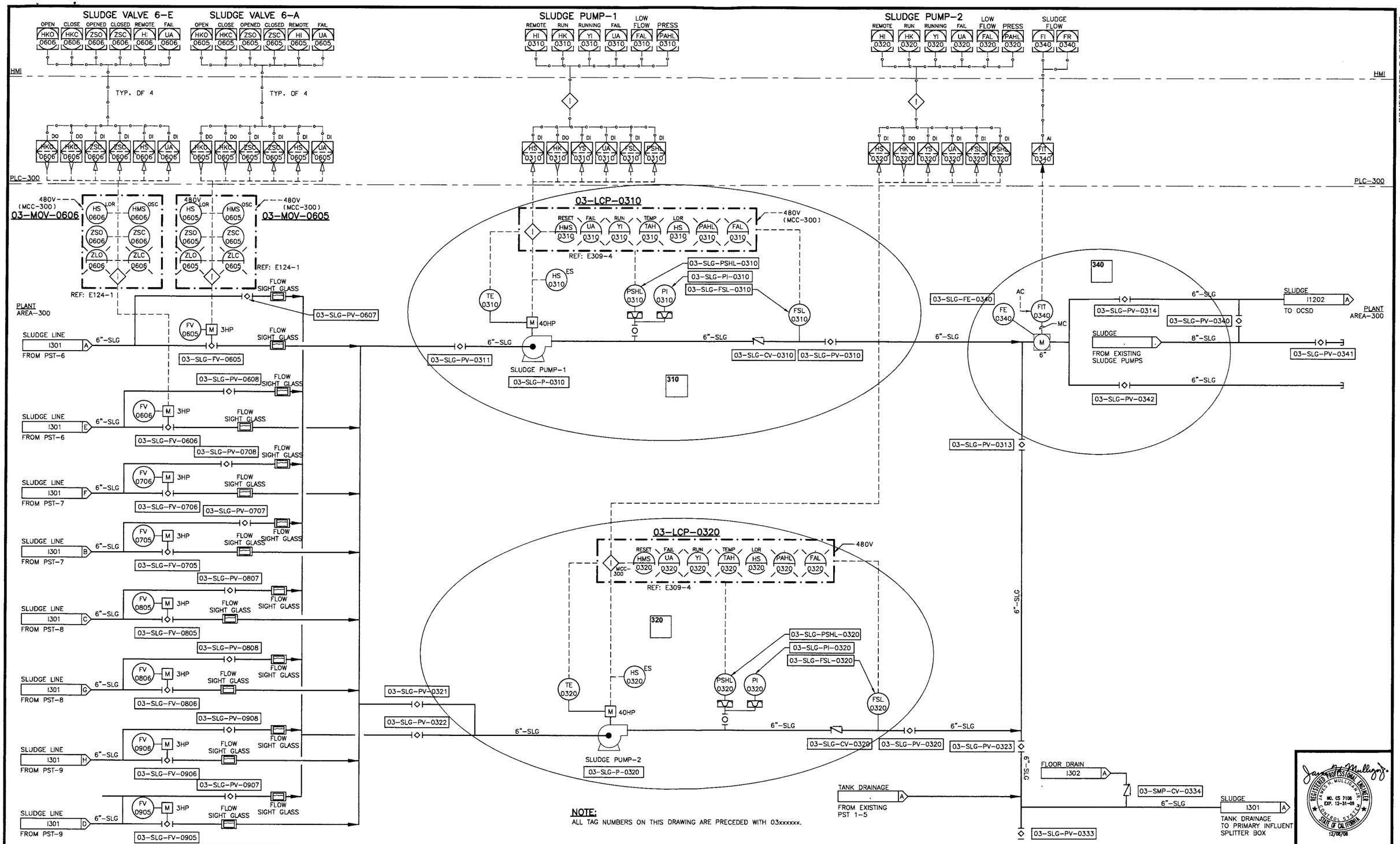

NOTE:
ALL TAG NUMBERS ON THIS DRAWING ARE PRECEDED WITH 03xxxxxx.

CONFORMED DOCUMENT

No.	DATE	REVISIONS	APP'D
2	–	CONFORMED DOCUMENT	–

DESIGNED: G. BARELA
DRAWN: B. PARKS
CHECKED: J. MULLIGAN

HDR
HDR Engineering, Inc.
3230 El Camino Real
Suite 200
Irvine, California 92602-1377

BRUCE R. WILLEY — HDR PROJECT ENGINEER RCE 33687 — DATE 12/08/08
STEVEN L. MALLOY — IRWD PRINCIPAL ENGINEER RCE 31926 — DATE 12/17/08

IRVINE RANCH WATER DISTRICT

IRVINE RANCH WATER DISTRICT
MWRP PHASE 2 EXPANSION
PROJECT NUMBERS 20214 & 30214

VERIFY SCALE
BAR IS ONE INCH ON ORIGINAL DRAWING
0 1"
IF NOT ONE INCH ON THIS SHEET, ADJUST SCALE ACCORDINGLY.

P&ID PRIMARY SEDIMENTATION TANKS
PRIMARY SLUDGE PUMPS

DRAWING 1303
SHEET 575 OF 628

REGISTERED PROFESSIONAL ENGINEER JAMES H. MULLIGAN JR. NO. CS 7108 EXP. 12-31-08 CONTROL SYSTEMS STATE OF CALIFORNIA 12/08/08

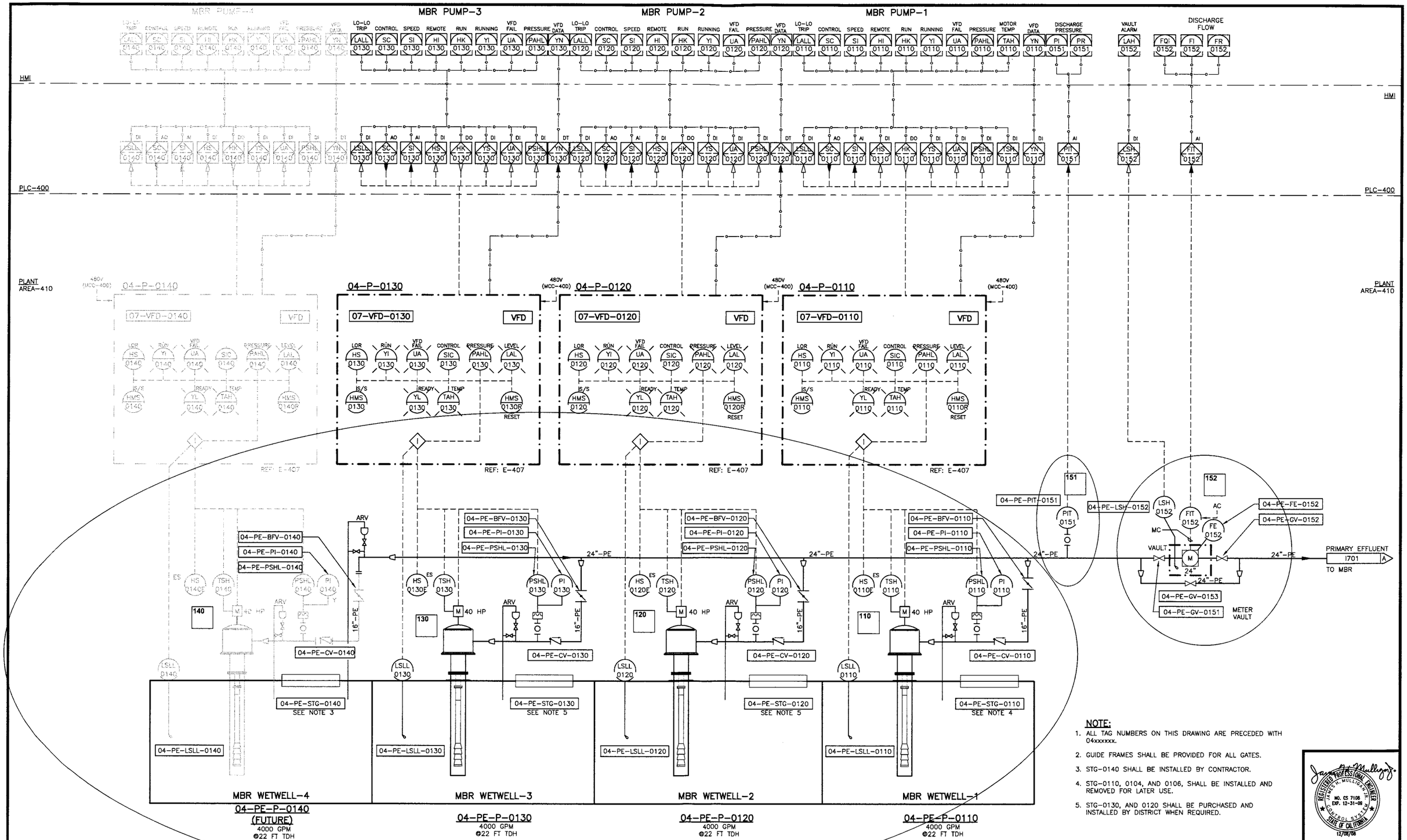

CONFORMED DOCUMENT

NOTE:

1. ALL TAG NUMBERS ON THIS DRAWING ARE PRECEDED WITH 04xxxxxx.
2. GUIDE FRAMES SHALL BE PROVIDED FOR ALL GATES.
3. STG-0140 SHALL BE INSTALLED BY CONTRACTOR.
4. STG-0110, 0104, AND 0106, SHALL BE INSTALLED AND REMOVED FOR LATER USE.
5. STG-0130, AND 0120 SHALL BE PURCHASED AND INSTALLED BY DISTRICT WHEN REQUIRED.

REGISTERED PROFESSIONAL ENGINEER — JAMES R. MULLIGAN, JR. — NO. CS 7108 — EXP. 12-31-08 — CONTROL SYSTEMS — STATE OF CALIFORNIA — 12/08/08

No.	DATE	REVISIONS	APP'D
–	–	–	

DESIGNED: G. BARELA
DRAWN: B. PARKS
CHECKED: J. MULLIGAN

HDR
HDR Engineering, Inc.
3230 El Camino Real
Suite 200
Irvine, California 92602-1377

BRUCE R. WILLEY — HDR PROJECT ENGINEER — RCE 33687 — DATE 12/08/08
STEVEN L. MALLOY — IRWD PRINCIPAL ENGINEER — RCE 31926 — DATE 12/17/08

IRVINE RANCH WATER DISTRICT

IRVINE RANCH WATER DISTRICT
MWRP PHASE 2 EXPANSION
PROJECT NUMBERS 20214 & 30214

VERIFY SCALE
BAR IS ONE INCH ON ORIGINAL DRAWING
0 1"
IF NOT ONE INCH ON THIS SHEET, ADJUST SCALE ACCORDINGLY.

P&ID PEPS-1
MEMBRANE BIOREACTOR FEED

DRAWING 1402
SHEET 577 OF 628

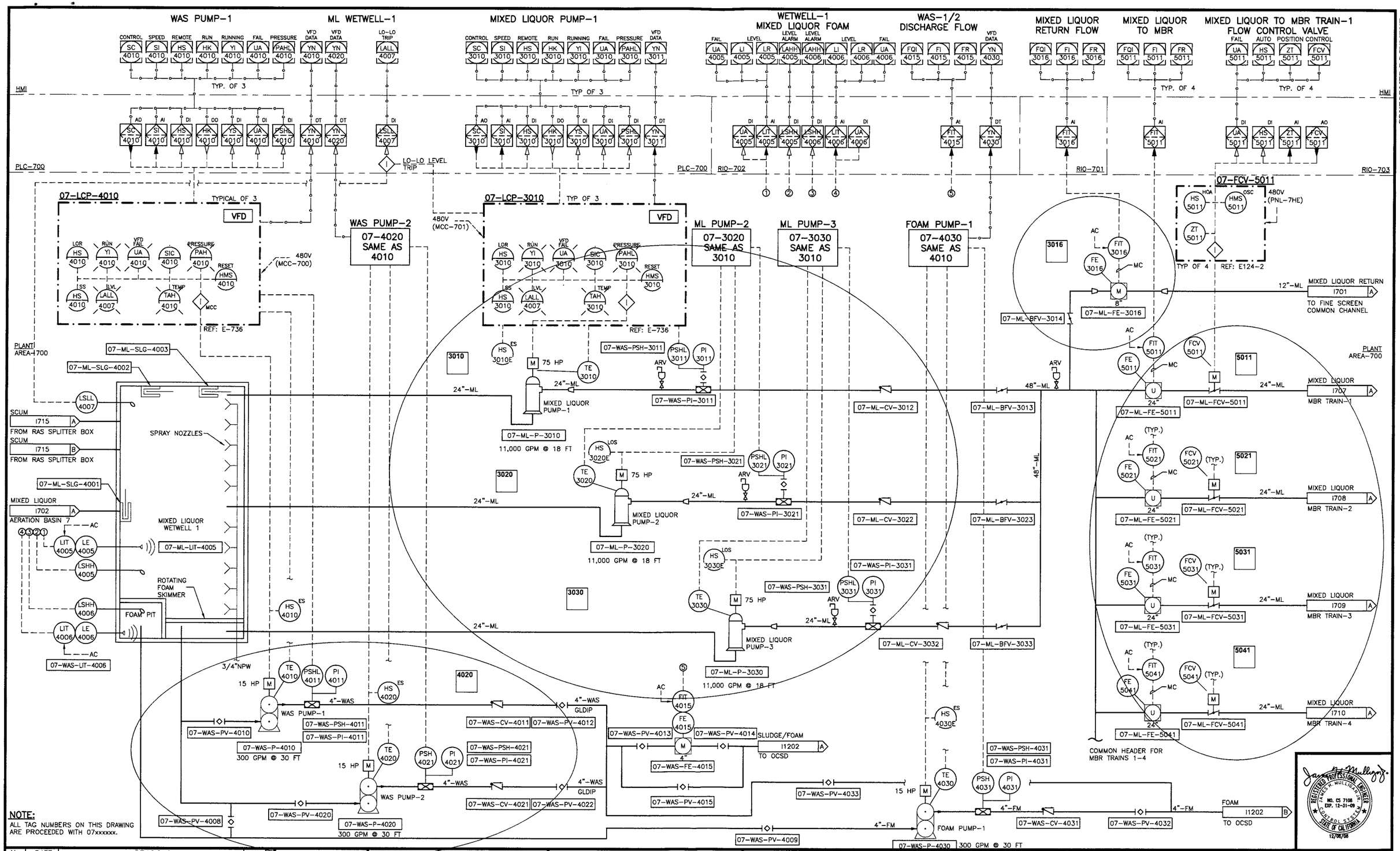

NOTE:
ALL TAG NUMBERS ON THIS DRAWING ARE PROCEEDED WITH 07xxxxxx.

No.	DATE	REVISIONS	APP'D
2	–	CONFORMED DOCUMENT	–

DESIGNED: G. BARELA
DRAWN: B. PARKS
CHECKED: J. MULLIGAN

HDR Engineering, Inc.
3230 El Camino Real
Suite 200
Irvine, California 92602-1377

BRUCE R. WILLEY — HDR PROJECT ENGINEER — RCE 33687 — DATE 12/08/08
STEVEN L. MALLOY — IRWD PRINCIPAL ENGINEER — RCE 31926 — DATE 12/17/08

IRVINE RANCH WATER DISTRICT
MWRP PHASE 2 EXPANSION
PROJECT NUMBERS 20214 & 30214

VERIFY SCALE
BAR IS ONE INCH ON ORIGINAL DRAWING
0 1"
IF NOT ONE INCH ON THIS SHEET, ADJUST SCALE ACCORDINGLY.

P&ID MEMBRANE BIOREACTOR
MIXED LIQUOR PUMPS 1-3

DRAWING 1704
SHEET 584 OF 628

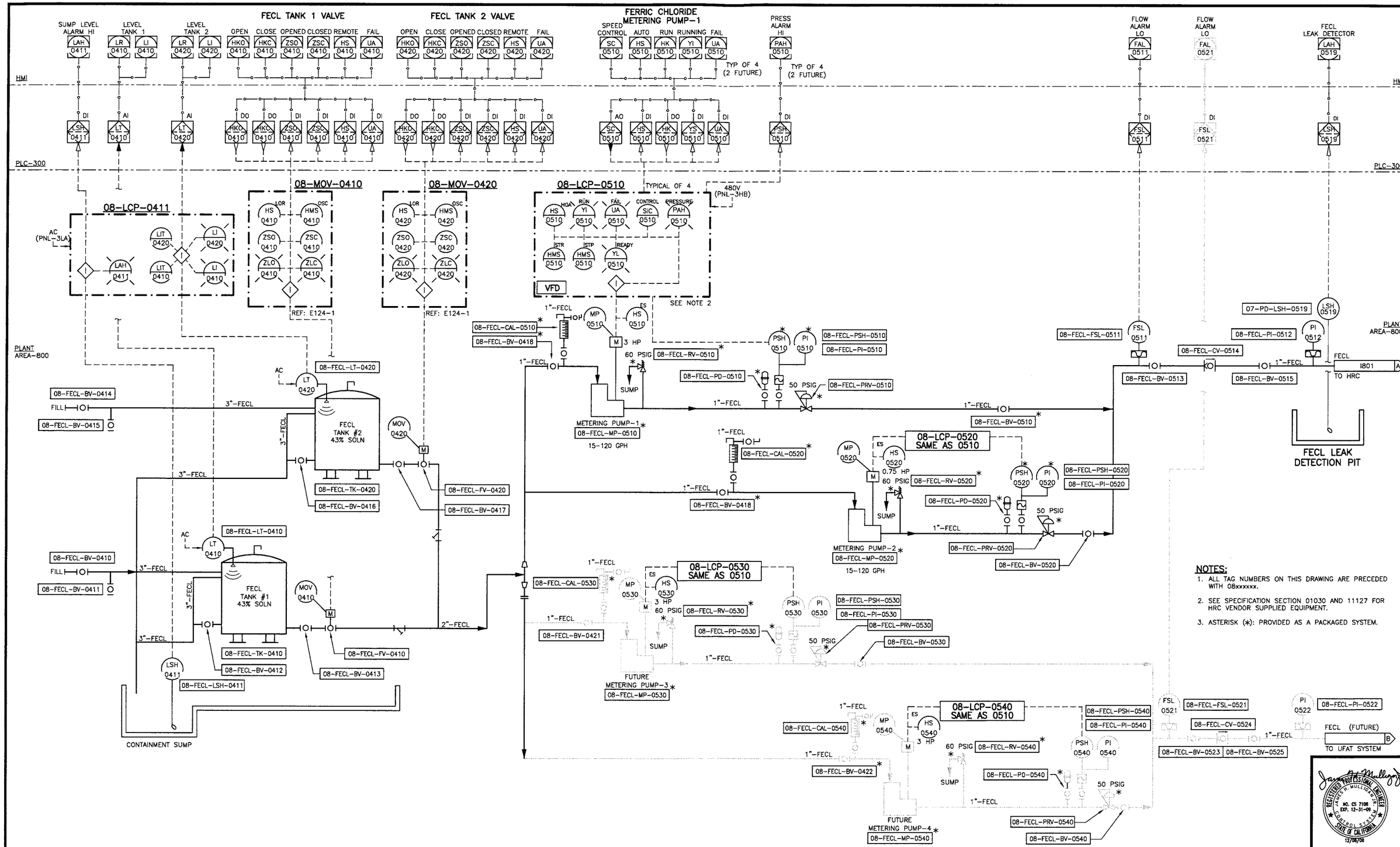

CONFORMED DOCUMENT

NOTES:

1. ALL TAG NUMBERS ON THIS DRAWING ARE PRECEDED WITH 08xxxxxx.
2. SEE SPECIFICATION SECTION 01030 AND 11127 FOR HRC VENDOR SUPPLIED EQUIPMENT.
3. ASTERISK (*): PROVIDED AS A PACKAGED SYSTEM.

REGISTERED PROFESSIONAL ENGINEER JAMES R. MULLIGAN NO. CS 7108 EXP. 12-31-09 CONTROL SYSTEMS STATE OF CALIFORNIA 12/08/08

No.	DATE	REVISIONS	APP'D
–	–	–	

DESIGNED: G. BARELA
DRAWN: B. PARKS
CHECKED: J. MULLIGAN

HDR
HDR Engineering, Inc.
3230 El Camino Real
Suite 200
Irvine, California 92602-1377

BRUCE R. WILLEY — HDR PROJECT ENGINEER RCE 33687 — DATE 12/08/08
STEVEN L. MALLOY — IRWD PRINCIPAL ENGINEER RCE 31926 — DATE 12/17/08

IRVINE RANCH WATER DISTRICT

IRVINE RANCH WATER DISTRICT
MWRP PHASE 2 EXPANSION
PROJECT NUMBERS 20214 & 30214

VERIFY SCALE
BAR IS ONE INCH ON ORIGINAL DRAWING
0 1"
IF NOT ONE INCH ON THIS SHEET, ADJUST SCALE ACCORDINGLY.

P&ID HIGH RATE CLARIFIER
FECL SYSTEM

DRAWING 1804
SHEET 611 OF 628

APPENDIX Q

Economic Evaluation Calculations

TABLE Q1
BAKER WATER TREATMENT PLANT
DRAFT PRELIMINARY DESIGN REPORT
ESTIMATE OF CAPITAL COSTS

Item No.	Item Description	Quantity	Unit	Unit Price[1]	Total Price [1]
	Baker Water Treatment Plant Equipment and Buildings				
1	***Membrane Filtration/ UV System***				***$15,527,000***
1.1	Pressurized Membrane Building	21,000	SF	$160	$3,360,000
1.2	PMF Equipment [10]	30,161,000	GAL	$0.34	$10,255,000
1.3	UV System	27,791,000	GAL	$0.04	$1,112,000
1.4	Process Mechanical	1	LS	$800,000	$800,000
2	***Washwater Equalization and Treatment***				***$1,960,000***
2.1	Membrane Filtration Washwater Equalization	55,000	GAL	$3	$165,000
2.2	Membrane Filtration Washwater Transfer Pumps	60	HP	$3,000	$180,000
2.3	Washwater Treatment	5,000,000	GAL	$0.20	$1,000,000
2.4	Recycle Pump Station	55,000	GAL	$3	$165,000
2.5	Recycle Pumps	150	HP	$3,000	$450,000
3	***Chemical Building / Chlorine Dioxide System***				***$4,724,000***
3.1	Mechanical / Building / Site Work	27,791,000	GAL	$0.14	$3,891,000
3.2	Chlorine Dioxide Chemical / Mechanical Equipment	1	LS	$750,000	$750,000
3.3	Flash Mix Equipment	1	LS	$82,500	$82,500
4	***Contact Basin***				***$860,000***
4.1	Contact Basin	215,000	GAL	$4	$860,000
5	***Electrical and Instrumentation***				***$3,721,000***
5.1	*Water Treatment Plant Site*	1	LS	$551,000	$551,000
5.2	Electrical (Membrane Filtration / UV System) [3]	1	LS	$2,215,000	$2,215,000
5.3	Electrical (Washwater Equalization and Treatment) [3]	1	LS	$280,000	$280,000
5.4	Electrical (Chemical Building) [3]	1	LS	$675,000	$675,000
6	***HVAC***				***$1,550,000***
6.1	HVAC	1	LS	$1,550,000	$1,550,000
7	***Site Work and Piping***				***$3,527,000***
7.1	Sitework	1	LS	$850,500	$850,500
7.2	Site Mechanical	1	LS	$2,676,000	$2,676,000
8	***Mobilization / Insurance / Management***				***$2,550,000***
8.1	Mobilization / Insurance / Management	1	LS	$2,550,000	$2,550,000
				Subtotal - Equipment and Buildings	**$34,419,000**
	Integration Facilities				
9	***OC-33 Expansion***				***$240,000***
9.1	OC-33 Expansion Mechanical / Site Work	1	LS	$240,000	$240,000
10	***Raw Water Pump Station***				***$2,908,000***
10.1	Site Work	1	LS	$181,000	$181,000
10.2	Yard Piping	1	LS	$246,000	$246,000
10.3	Mechanical	1	LS	$1,019,000	$1,019,000
10.4	Building	1	LS	$254,000	$254,000
10.5	Electrical & Instrumentation	1	LS	$808,000	$808,000
10.6	Surge Design / Facilities	1	LS	$400,000	$400,000
11	***Forebay System (Reservoir /Feedwater Pump Station / TCWD PS)***				***$4,300,000***
11.1	Forebay Reservoir (0.8 MG)	1	LS	$1,300,000	$1,300,000
11.2	Forebay Earthwork (Cut / Fill)	1	LS	$80,000	$80,000
11.3	Flow Control Facility Mechanical (w/ enclosure)	1	LS	$250,000	$250,000
11.4	Feedwater Pump Station (w/ building)	1	LS	$1,700,000	$1,700,000
11.5	TCWD Pump Station (w/ building)	1	LS	$370,000	$370,000
11.6	Electrical & Instrumentation	1	LS	$600,000	$600,000

TABLE Q1
BAKER WATER TREATMENT PLANT
DRAFT PRELIMINARY DESIGN REPORT
ESTIMATE OF CAPITAL COSTS

Item No.	Item Description	Quantity	Unit	Unit Price[1]	Total Price [1]
12	***Product Water Pump Station / AMP Connection***				***$3,504,000***
12.1	Site Work	1	LS	$52,000	$52,000
12.2	Yard Piping	1	LS	$391,000	$391,000
12.3	Mechanical	1	LS	$1,228,000	$1,228,000
12.4	Building	1	LS	$273,000	$273,000
12.5	Electrical & Instrumentation	1	LS	$938,000	$938,000
12.6	Surge Design / Facilities	1	LS	$300,000	$300,000
12.7	AMP Metering Vault / Connection	1	LS	$322,250	$322,250
13	***Backup Power***				***$1,250,000***
13.1	Backup Power at Treatment Plant Site	1	LS	$740,000	$740,000
13.2	Backup Power for Product Water Pump Station Site	1	LS	$510,000	$510,000
14	***Mobilization / Insurance / Management***				***$976,000***
14.1	Mobilization / Insurance / Management [4]	1	LS	$976,000	$976,000
				Subtotal - Integration Facilities	**$13,178,000**
				SUBTOTAL (Equipment and Buildings + Integration Facilities)	**$47,597,000**
				District Costs [5]	**$2,200,000**
				Baker Site Land Use Cost [6]	**$440,000**
				Environmental Documentation [7]	$170,000
				Engineering [8]	$4,437,000
				Contingency / Legal [9]	$6,611,000
				Contingency / Engineering / Environmental / Legal / Administration	**$11,218,000**
				TOTAL ESTIMATE OF CAPITAL COST	**$61,455,000**

Notes:

[1] Capital cost are Class 4 Estimates as defined by AACEI with estimated -15% to +30 range of accuracy

[2] Final cost to be determined by Southern California Edison.

[3] Electrical calcualted 12.5% of total corresponding facility cost.

[4] Mobilization / Insurance / Management Cost calculated at 8-percent of capital cost.

[5] Estimate provided by IRWD - includes cost for project management, field support, construction administrative services and inspection.

[6] Cost for land use at Baker Site per Baker WTP Agreement Section 3.1. Area = 4 acres. Unit Cost = $110,000 /acre.

[7] Environmental Documentation cost is based on EIR preparation cost provided to IRWD.

[8] Based on approved design fee for BWTPP, plus authorized flow test budget, and forebay / feedwater pump station design.

[9] Contingency / Legal is based on 15-percent of Subtotal (Equip. and Buildings + Int. Facilities excluding cost for Moblization, Insurance and Management).

[10] Based on calculation using average of budget estimates provided by Pall and Siemens on 10/23/09.

Table Q2: Flash Mix Energy Costs

Item	Unit	Values
Power	hp	5
Days/ year [1]	-	329
Energy	kWh/year	29,395
Unit Cost	$/kWh	$0.13
Total	**$/Year**	**$3,821**

[1] Based on 90-percent plant utilization

Table Q3: Membrane Filtration Energy Costs

Item	Unit	Values [3]
Upstream Elevation	feet	70
Downstream Elevation	feet	0
Product Water	MGD	27.5
Minimum Recovery	%	92%
Gross Production (including recycle flows)	MGD	29.4
Maximum Instantaneous Flux	gfd	45
On-Line Factor	%	86%
Net Flux	gfd	36
Membrane Area per Module	s.f.	538
Min. Number of Modules	No.	1537
No. of Duty Units	No.	11
No. of Rotating (Standby) Units	No.	0
No. of Units Out of Service	No.	1
Total Number of Units	No.	12
No.of Modules per Unit	No.	140
Total Number of Modules	No.	1676
Backwash Flow per Module	gpm	8
Maximum Backwash Flow	gpm	1117
Average BW Interval	min	30
% Time Backwash Pump is in Operation	%	73%
Power	hp	28
Days/ year [1]	-	329
Energy	kWh/year	121,853
Unit Cost	$/kWh	$0.13
MF Backwash Pumping Energy Cost	$/Year	$15,841
Air Compressors	$/Year	$12,150
EFM/ CIP Pumps	$/Year	$1,200
Total	**$/Year**	**$29,191**

[1] Based on 90-percent plant utilization

[2] Pall MF system was selected for cost estimates as O&M costs are anticipated to be higher than those for Siemens.

[3] Forebay Pump Station pumping costs are presented in Table 14.13. Annual cost is estimated at $511,979.

Table Q4: UV System Energy Costs

Item	Unit	Values
Energy Use	kWh/day	365
Days/ year [1]	-	329
Energy	kWh/year	120,034
Unit Cost	$/kWh	$0.13
Total	**$/Year**	**$15,604**

[1] Based on 90-percent plant utilization

Table Q5: Raw Water Pump Station Energy Costs

Item	Unit	Values
Power	hp	1200
Days/ year [1]	-	55
Energy	kWh/year	1,175,820
Unit Cost	$/kWh	$0.13
Total	**$/Year**	**$152,857**

[1] Based on 15-percent utilization rate for the RWPS

Table Q6: Product Water Pump Station Energy Costs

Item	Unit	Values
Upstream Elevation	feet	615
Downstream Elevation	feet	820
Capacity - Flow	cfs	32.5
	gpm	14,587
	mgd	21.0
Power	hp	1080
Days/ year [1]	-	329
Energy	kWh/year	6,349,408
Unit Cost	$/kWh	$0.13
Total	**$/Year**	**$825,423**

[1] Based on 90-percent plant utilization

Table Q7: MFWW Transfer Pumping Energy Costs

Item	Unit	Values
Flow	gpm	1,646
TDH	ft	35
Power	hp	21
Days/ year [1]	-	329
Energy	kWh/year	122,324
Unit Cost	$/kWh	$0.13
Total	**$/Year**	**$15,902**

[1] Based on 90-percent plant utilization

Table Q8: Feedwater Pump Station / TCWD Pump Station Energy Cost

Item	Unit	Feedwater Pump Station	TCWD PS
Upstream Elevation	feet	630	690
Downstream Elevation	feet	725	725
Capacity - Flow	cfs	43.5	6
	gpm	19,524	2,693
	mgd	28.1	3.9
Power	hp	670	34
Days/ year [1]	-	329	329
Energy	kWh/year	3,938,301	200,131
Unit Cost	$/kWh	$0.13	$0.13
Total	**$/Year**	**$511,979**	**$26,017**

[1] Based on 90-percent plant utilization

Table Q9: Cost of Cleaning Chemicals for Membrane System

Baker Water Treatment Plant	Project Total ($/year)
MF CIP Chemicals	
Citric Acid 50% (Cleaning)	$180,079
Citric Acid 50%(Neutralization)	$0
NaOCl 12.5%	$5,823
NaSHSO3 38%	$4,200
NaOH 25% (Cleaning)	$36,616
NaOH 25% (Neutralization)	$60,050
MF EFM Chemicals	**$286,769**
NaOCl 12.5%	$64,048
NaSHSO3 38%	$46,202
Total	**$397,019**

[1] Based on 90-percent plant utilization

Table Q10: Cost of Process Chemicals

Baker Water Treatment Plant	Project (43.5 cfs) Total ($/year)
Ferric Chloride, 42%	$577,124
NaOCl	$208,163
NaOH 25%	$108,527
AA 29%	$106,764
Chlorine Doxide	$211,535
Total	**$1,212,113**

[1] Based on 90-percent plant utilization

Table Q11: Cost of Replacing Consumables

Baker Water Treatment Plant	365 days	90% Plant Utilization [1]
	Project [2] (43.5 cfs)	Project (43.5 cfs)
Spare Parts [3]	$102,549	$102,549
Module Replacment	$187,540	$187,540
UV Lamp Replacement	$6,018	$5,567
Total	**$296,108**	**$295,656**

[1] Module and Spare Parts Costs are not impacted by plant utilization rate.

[2] Module Replacement determined by the number of modules required.

[3] Spare Parts cost is based on 1-percent of membrane cost. Cost fully incurred after second year (post warranty).

Table Q12: Labor Costs

Baker Water Treatment Plant	Unit	Values
No. of Operators	No.	2
Weeks per Year	week	52
Hours per Week (T4)	hr	40
Unit Cost (T4) [1]	$/h	$100
Subtotal (T4) Labor Cost	$/Year	$208,000
Hours per Week (T5)	hr	30
Unit Cost (T5) [1]	$/h	$110
Subtotal (T5) Labor Cost	$/Year	$171,600
Total	**$/Year**	**$379,600**

[1] Includes G and per the Baker Agreement of 78.6-percent

Table Q13: Estimation of Untreated Water Cost from MWDOC

Baker Water Treatment Plant	MWDOC Rates for Treated Water [1]					Assumed MWDSC Rates for Untreated Water[2][3]				MWDOC Surcharge Rate		Assumed MWDOC Rates for Untreated Water [4]		
	Tier 1		Tier 2		Mix [5]	Tier 1		Tier 2		Tier 1	Tier 2	Tier 1 [6]	Tier 2 [6]	Mix [5]
	Rate	% Increase	Rate	% Increase	Rate	Rate	% Increase	Rate	% Increase	Rate	Rate	Rate	Rate	Rate
2009	$701		$781		$709	$484		$564		n/a	n/a	$484	$564	$492
2010	$701	-	$811	-	$712	$484	0.0%	$594	-	$6.5	$6.5	$491	$601	$502
2011	$860	22.6%	$934	15.2%	$867	$594	22.6%	$684	15.2%	$8.0	$8.0	$602	$692	$611
2012	$903	5.0%	$981	5.0%	$911	$623	5.0%	$718	5.0%	$8.5	$8.5	$632	$727	$641
2013	$948	5.0%	$1,029	5.0%	$956	$654	5.0%	$754	5.0%	$8.5	$8.5	$663	$762	$673
2014	$995	5.0%	$1,081	5.0%	$1,004	$687	5.0%	$792	5.0%	$9.0	$9.0	$696	$801	$706
2015	$1,044	5.0%	$1,135	5.0%	$1,053	$721	5.0%	$831	5.0%	$9.0	$9.0	$730	$840	$741
2016	$1,097	5.0%	$1,191	5.0%	$1,106	$757	5.0%	$873	5.0%	$9.5	$9.5	$767	$882	$778
2017	$1,151	5.0%	$1,250	5.0%	$1,161	$795	5.0%	$916	5.0%	$9.5	$9.5	$804	$925	$816
2018	$1,208	5.0%	$1,313	5.0%	$1,219	$834	5.0%	$962	5.0%	$10.0	$10.0	$844	$972	$857
2019	$1,268	5.0%	$1,378	5.0%	$1,279	$876	5.0%	$1,009	5.0%	$10.0	$10.0	$886	$1,019	$899
2020	$1,331	5.0%	$1,447	5.0%	$1,343	$919	5.0%	$1,059	5.0%	$10.0	$10.0	$929	$1,069	$943
2021	$1,398	5.0%	$1,519	5.0%	$1,410	$965	5.0%	$1,112	5.0%	n/a	n/a	$976	$1,123	$990
2022	$1,468	5.0%	$1,595	5.0%	$1,480	$1,013	5.0%	$1,168	5.0%	n/a	n/a	$1,024	$1,179	$1,040
2023	$1,541	5.0%	$1,675	5.0%	$1,554	$1,064	5.0%	$1,226	5.0%	n/a	n/a	$1,076	$1,238	$1,092
2024	$1,618	5.0%	$1,758	5.0%	$1,632	$1,117	5.0%	$1,288	5.0%	n/a	n/a	$1,129	$1,300	$1,146
2025	$1,699	5.0%	$1,846	5.0%	$1,714	$1,173	5.0%	$1,352	5.0%	n/a	n/a	$1,186	$1,365	$1,204
2026	$1,784	5.0%	$1,938	5.0%	$1,799	$1,232	5.0%	$1,420	5.0%	n/a	n/a	$1,245	$1,433	$1,264
2027	$1,873	5.0%	$2,035	5.0%	$1,889	$1,293	5.0%	$1,491	5.0%	n/a	n/a	$1,307	$1,505	$1,327
2028	$1,967	5.0%	$2,137	5.0%	$1,984	$1,358	5.0%	$1,565	5.0%	n/a	n/a	$1,373	$1,580	$1,394

[1] Based on June 2009 water rate projections provided to IRWD by MWDOC, and updated after 9/1/2009 to account for MWDSC water rate change.

[2] 2009 and 2010 rates for full service untreated and treated MWDSC water is based on estimates posted on MWDSC's website November 2009.

[3] Future cost of untreated MWDSC water is estimated based on escalation rates similar to the treated water costs

[4] The sum of MWDSC untreated water cost and MWDOC surcharge rates

[5] Assumes 90-percent of Tier 1 and 10-percent of Tier 2

[6] Assume rates to annualy escalate at a rate of 5-percent beyond year 2020

Table Q14: Projected Cost of Water for Baker WTP

Baker Water Treatment Plant - 43.5 cfs Forebay, Feedwater PS, N+1

Year	Energy, Chemical, & Consumables Costs (5% Escalation)	Labor Costs (3% Escalation)	Non-Reclaimable Water Treatment (3% Escalation)	Other O&M System Costs (3% Escalation)	Total Escalated O&M Costs ($/AF/yr)	Annual Capital Cost ($/AF/yr)	Cost of Untreated Water from MWDOC ($/AF/yr)	Total Project Costs Alternative 1 ($/AF/yr)
2009	$3,485,600	$379,600	$0	$75,000	$141	$134	$492	$766
2010	$3,659,900	$391,000	$2,300	$77,300	$147	$134	$502	$783
2011	$3,842,900	$402,700	$4,600	$79,600	$155	$134	$611	$899
2012	$4,035,000	$414,800	$7,000	$82,000	$162	$134	$641	$937
2013	$4,236,700	$427,200	$9,400	$84,400	$170	$134	$673	$976
2014	$4,448,600	$440,100	$11,900	$86,900	$178	$134	$706	$1,018
2015	$4,671,000	$453,300	$14,600	$89,600	$187	$134	$741	$1,061
2016	$4,904,600	$466,900	$17,200	$92,200	$196	$134	$778	$1,108
2017	$5,149,800	$480,900	$20,000	$95,000	$205	$134	$816	$1,155
2018	$5,407,300	$495,300	$22,900	$97,900	$215	$134	$857	$1,206
2019	$5,677,600	$510,200	$25,800	$100,800	$225	$134	$899	$1,258
2020	$5,961,500	$525,500	$28,800	$103,800	$236	$134	$943	$1,313
2021	$6,259,600	$541,200	$31,900	$106,900	$248	$134	$990	$1,372
2022	$6,572,600	$557,500	$35,100	$110,100	$260	$134	$1,040	$1,433
2023	$6,901,200	$574,200	$38,400	$113,400	$272	$134	$1,092	$1,498
2024	$7,246,300	$591,400	$41,800	$116,800	$285	$134	$1,146	$1,566
2025	$7,608,600	$609,100	$45,400	$120,400	$299	$134	$1,204	$1,637
2026	$7,989,000	$627,400	$49,000	$124,000	$314	$134	$1,264	$1,712
2027	$8,388,500	$646,200	$52,700	$127,700	$329	$134	$1,327	$1,790
2028	$8,807,900	$665,600	$56,500	$131,500	$345	$134	$1,394	$1,872

Annualized Capital Cost = $3,749,000

Annual Production (AF)= 28,018

Annualized Capital Cost Per AF= $134

Table Q15: Projected Cost of Baker WTP Product Water

Baker Water Treatment Plant	Cost ($)
2009	$766
2010	$783
2011	$899
2012	$937
2013	$976
2014	$1,018
2015	$1,061
2016	$1,108
2017	$1,155
2018	$1,206
2019	$1,258
2020	$1,313
2021	$1,372
2022	$1,433
2023	$1,498
2024	$1,566
2025	$1,637
2026	$1,712
2027	$1,790
2028	$1,872

Table Q16: Baker WTP Water Costs vs. MWDOC Import Water Cost

Baker Water Treatment Plant	$/AFY Cost Difference (Baker WTP Water Cost minus MWDOC Tier 1/Tier 2 Meld) [1] ($)
Present - 2009	$57
Project Startup - 2012	$27
2014 (year 2 of operation)	$15
2015 (year 3 of operation)	$8
2016 (year 4 of operation)	$2
2017 (year 5 of operation)	($6)
2018 (year 6 of operation)	($13)
2020 (year 8 of operation)	($30)
2024 (year 12 of operation)	($67)
2028 (year 16 of operation)	($112)
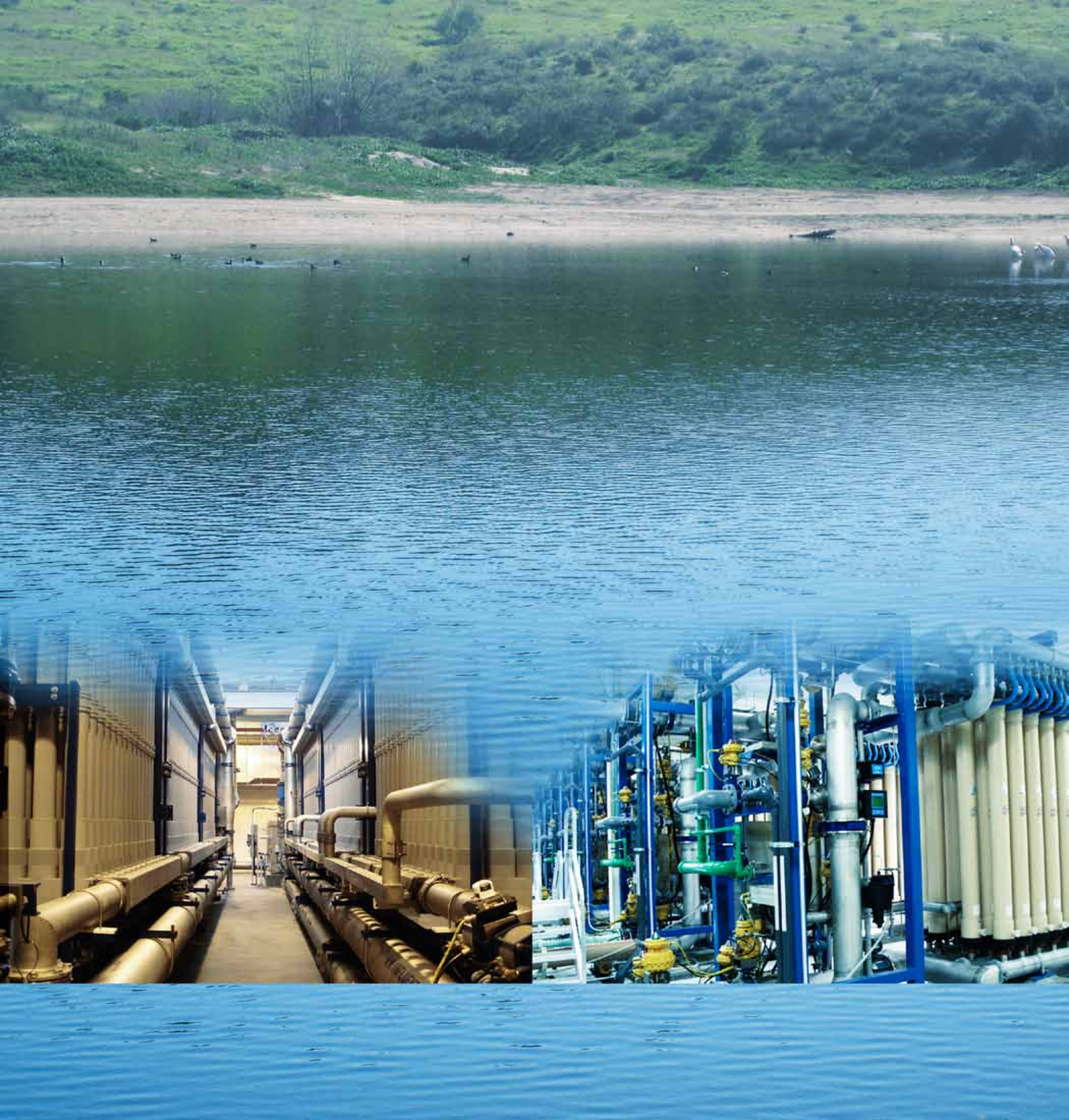
[1] Melded rate at ratio of 90-percent Tier 1 and 10-percent Tier 2.