Exhibit A – Lake Nacimiento Water Treatment Plant 30% Design Plans and Specifications

City of El Paso de Robles

Plans for Construction of

2.4 MGD WATER TREATMENT PLANT PROJECT

November 2012

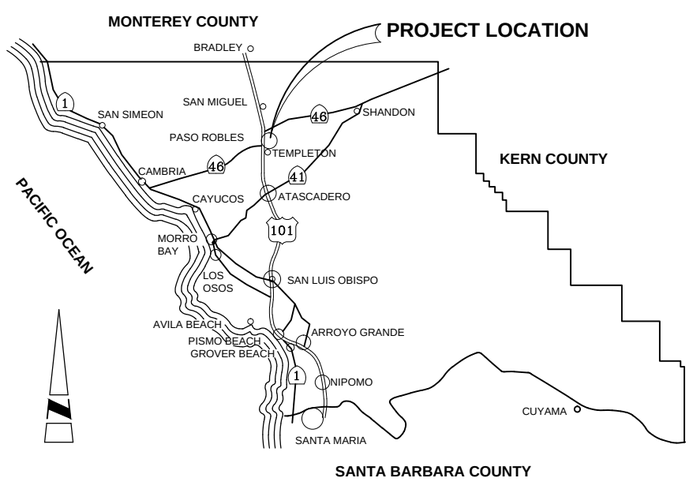

VICINITY MAP

WATER TREATMENT PLANT LOCATION MAP

PRELIMINARY
30% SUBMITTAL

PROJECT
WATER TREATMENT PLANT PROJECT

CLIENT
CITY OF EL PASO DE ROBLES

APPROVED BY:

DITAS ESPERANZA, CAPITAL PROJECT ENGINEER — DATE

CHRISTOPHER ALAKEL, WATER RESOURCE MANAGER — DATE

MIKE MASER, WATER DIVISION SUPERVISOR — DATE

PROJECT MANAGER: JON HANLON — DATE: 11/29/12

ENGINEER OF RECORD: R. KEVIN BERRYHILL — DATE: 11/29/12

ACCOUNT NUMBER: 60264606 — FILE NUMBER

SHEET NUMBER: G00-01 — SHEETS: 1 OF -

AECOM
1194 Pacific Street, Suite 204
San Luis Obispo, California 93401
T 805.542.9840 F 805.542.9990
www.aecom.com

DWG: \\?\PASO ROBLES\60264606-WTP\400 CAD\PLANSET\1-GEN\G00-01.dwg USER: rodriguezfl
DATE: Nov 28, 2012 3:36pm XREFS: C-*-BOUNDARY-E C-*-TOPO-EX C-*-FEATURES-E C-LP-PR S-RP-06 D-FP-CHEM-PIPING S-NP-09 A-FP-MEMB IMAGES: CITY OF PASO LOGO_1.png

DWG: V:\PASO ROBLES\60264606-WTP\000 CAD\PLANSET\1-GEN\G00-02.dwg Layout Name: 34x22 - Plotted by: Rodriguez, David Date: 11/28/2012 - 3:36 PM
XREFS: G-BD-PR IMAGES: CITY OF PASO LOGO_1.png -

PRELIMINARY
30% SUBMITTAL

0 1/2 1
IF THIS BAR DOES NOT MEASURE 1" THEN DRAWING IS NOT TO FULL SCALE

REV	DATE	DESCRIPTION	APPR

PROJECT ENGINEER REG NUMBER EXP DATE

AECOM
AECOM
1194 PACIFIC STREET, SUITE 204
SAN LUIS OBISPO, CA 93401
T 805.542.9840 F 805.542.9990
www.aecom.com

CITY OF EL PASO DE ROBLES
INCORPORATED 1889

CITY OF EL PASO DE ROBLES
WATER TREATMENT PLANT PROJECT

SHEET INDEX

DESIGNED:
DETAILED:
CHECKED:
APPROVED:
DATE: November 2012
AECOM PROJECT NO.
60264606
P.R. PROJECT NO.
CADD STDS.
AECOM

G00-02
SHEET
2 OF -

ABBREVIATIONS

AB	ANCHOR BOLT/AGGREGATE BASE
ABT	ABOUT
AC	ASPHALT CONCRETE
ADPTR	ADAPTER
AGG	AGGREGATE
AHD	AHEAD
AL	ALUMINUM
ALTN	ALTERNATE
AP	ANGLE POINT
APPROX	APPROXIMATE
ARR	ARRANGEMENT
ASSY	ASSEMBLY
AW	AUXILIARY WATER
BC	BEGINNING OF CURVE
BEG	BEGIN
BETW	BETWEEN
BF	BLIND FLANGE
BFV	BUTTERFLY VALVE
BLDG	BUILDING
BLK	BLOCK
BM	BEAM/BENCH MARK
BOT	BOTTOM
BW	BACK OF WALK/BLOCKWALL
CAP	CAPACITY
CBS	COARSE BAR SCREEN
CFS	CUBIC FEET PER SECOND
CI	CAST IRON
CIP	CLEAN-IN-PLACE
CIRC	CIRCULATOR
CISP	CAST IRON SOIL PIPE
CJ	CONSTRUCTION JOINT
CL	CLASS
CL_2	CHLORINE
℄	CENTER LINE
CLR	CLEAR
CMP	CORRUGATED METAL PIPE
CMPNT	COMPONENT
CMU	CONCRETE MASONRY UNIT
CND	CONDUIT
CNS	COMPACTED NATIVE SUBGRADE
CO	CLEAN OUT/CONDUIT ONLY
COL	COLUMN
COMP	COMPLETE/COMPOSITE
CONC	CONCRETE
CONN	CONNECTION
CONST	CONSTRUCTION
CONT	CONTINUATION
CONTR	CONTROL/CONTRACTOR
COR	CORNER
CORP	CORPORATION
CP	CATHODIC PROTECTION
CPLG	COUPLING
CT	COPPER TUBING/CENTER TOP
CTG	COATING
CTR	CENTER
CYL	CYLINDER
DAF	DISSOLVED AIR FLOATATION
DBL	DOUBLE
DI	DUCTILE IRON/DROP INLET
DIA	DIAMETER
DIM	DIMENSION
DIP	DUCTILE IRON PIPE
DISCH	DISCHARGE
DN	DOWN
DR	DRAIN/DOOR
DWG	DRAWING
DWL	DOWEL
E	EAST
EA	EACH
EC	END OF CURVE/ELECTRICAL CONDUCTIVITY
ECC	ECCENTRIC
EDP	EMERGENCY DISPOSAL POND
EF	EACH FACE/EXHAUST FAN
EG	EXISTING GROUND OR TURF
EL	ELEVATION
ELB	ELBOW
ELEC	ELECTRIC
ENC	ENCASEMENT
EP	EDGE OF PAVEMENT
EPVC	ELECTRICAL PVC
EW	EACH WAY
EXIST	EXISTING
EXST	EXISTING
EXP	EXPANSION
EXT	EXTENSION/EXTERIOR
FC	FACE OF CURB/FOOT-CANDLE
FD	FLOOR DRAIN
FDN	FOUNDATION
FDR	FEEDER
FE	FINAL EFFLUENT
FG	FINISHED GRADE
FF	FINISHED FLOOR/FLAT FACE
FIG	FIGURE
FIN	FINISH/FINAL
FL	FLOWLINE
FLG	FLANGE
FLEX	FLEXIBLE
FLR	FLOOR
FM	FLOW METER
FOC	FACE OF CONCRETE
FT	FEET/FOOT
FTG	FOOTING
GA	GAUGE
GAC	GRANULAR ACTIVATED CARBON
GAL	GALLON
GALV	GALVANIZED
GB	GRADE BREAK
GCH	GRIT CHAMBER
GCL	GRIT CLASSIFIER
GM	GAS METER
GP	GRIT PUMP
GPM	GALLONS PER MINUTE
GR	GRADE
GRTG	GRATING
GRVD	GROOVED
GV	GAS VALVE/GATE VALVE
HB	HOSE BIBB
HDR	HEADER
HGT	HEIGHT
HORIZ	HORIZONTAL
HP	HORSEPOWER/HIGH PRESSURE
HR	HANDRAIL/HOUR
HSS	HIGH STRENGTH STEEL
HWL	HIGH WATER LEVEL
HYDR	HYDRAULIC
ID	INSIDE DIAMETER
IDB	INFLUENT DISTRIBUTION BOX
IE	INVERT ELEVATION
ILP	INFLUENT LIFT PUMP
ILS	INFLUENT LIFT STATION
IN	INCH(ES)
INSTL	INSTALLATION
INSTM	INSTRUMENTATION
INT	INTERIOR
IPS	IRON PIPE SIZE
JT	JOINT
LB	POUND
LG	LONG
LLV	LONG LEG VERTICAL
LSH	LEVEL SWITCH HIGH
LSL	LEVEL SWITCH LOW
LT	LEFT/LIGHT
LWL	LOW WATER LEVEL
M	MILLIGRAM
MACH	MACHINE
MATL	MATERIAL
MAX	MAXIMUM
MB	MACHINE BOLT
MBS	MECHANICAL BAR SCREEN
MCC	MOTOR CONTROL CENTER
MECH	MECHANICAL
MFR	MANUFACTURER
MFS	MEMBRANE FILTRATION SYSTEM
MGD	MILLION GALLONS PER DAY
MH	MANHOLE
MI	MALLEABLE IRON/MILE
MIN	MINIMUM
MIPT	MALE IRON PIPE THREAD
ML	MATCH LINE/MIXED LIQUOR
MOV	MOTORIZED VALVE
MS	MOWSTRIP
MXR	MIXER
N	NORTH
NIC	NOT IN CONTRACT
No.	NUMBER
NOM	NOMINAL
NPT	NATIONAL PIPE THREAD
NTS	NOT TO SCALE
NWL	NORMAL WATER LEVEL
OC	ON CENTER
OD	OXIDATION DITCH/OUTSIDE DIAMETER
OF	OVERFLOW
OPNG	OPENING
OPP	OPPOSITE
PC	PRIMARY CLARIFIER
PCC	POINT OF COMPOUND CURVE/ PORTLAND CEMENT CONCRETE
PE	PLAIN END/POLYETHYLENE/PRIMARY EFFLUENT/POLYELECTROLYTE
PELP	PRIMARY EFFLUENT LIFT PUMP
PELS	PRIMARY EFFLUENT LIFT STATION
PEN	PENETRATE
PL	PLATE/PROPERTY LINE
POC	POINT ON CURVE
PRV	PRESSURE REDUCING VALVE
PSI	POUNDS PER SQUARE INCH
PT	POINT
PVC	POLYVINYL CHLORIDE
PVMT	PAVEMENT
PW	PROCESS WATER
PWR	POWER
R	RADIUS, RADIAL
RAS	RETURNED ACTIVATED SLUDGE
RCP	REINFORCED CONCRETE PIPE
RD	ROUND/ROAD
RDC	REDUCE
RECM	RECOMMEND, RECOMMENDATION
REINF	REINFORCED
REL	RELATIVE
REQD	REQUIRED
RP	REDUCED PRESSURE BACKFLOW PREVENTER
RS	RAW SEWAGE
RT	RIGHT
R/W	RIGHT OF WAY
S	SOUTH/SEWER/SLOPE
SAR	SURFACE AERATOR
SC	SECONDARY CLARIFIER
SCDB	SECONDARY CLARIFIER DISTRIBUTION BOX
SCH	SCHEDULE
SCP	SCUM PUMP
SD	STORM DRAIN
SECT	SECTION
SHLDR	SHOULDER
SHT	SHEET
SIM	SIMILAR
SL	SLUICE GATE/SLOPE
SLDR	SOLDER
SLTD	SLOTTED
SP	SPACE/SEWER PIPE/SLUDGE PUMP/STEEL PIPE/SPOOL
SPCG	SPACING
SPEC	SPECIFICATION
SPR	IRRIGATION SPRINKLER
SPRT	SUPPORT
SQ	SQUARE
SRS	SEPTAGE RECEIVING STATION
SS	SANITARY SEWER
SSDB	SECONDARY SLUDGE DISTRIBUTION BOX
SST	STAINLESS STEEL
STA	STATION
STD	STANDARD
STF	STIFFENER
STL	STEEL
STR	STRAIGHT
STRUC	STRUCTURE
SVCE	SERVICE
SWC	SCREENING WASHER/COMPACTOR
SYMM	SYMMETRICAL
T&B	TOP & BOTTOM
TBD	TO BE DETERMINED
TC	TOP OF CURB OR CONCRETE
TCF	TOP OF CURB FACE
TEMP	TEMPERATURE
TF	TOP OF FOOTING
TG	TOP OF GRATE
THD	THREAD
THK	THICK
THKNS	THICKNESS
TOP	TOP OF PIPE/TOP OF PEDESTAL
TOT	TOTAL
TOW	TOP OF WALL
TRANS	TRANSFORMER
TW	TOP OF WALL
TYP	TYPICAL
UD	UNDER DRAIN
UNO	UNLESS NOTED OTHERWISE
V	VALVE
VB	VALVE BOX
VCP	VITRIFIED CLAY PIPE
W	WEST/WIDTH
W/	WITH
WAS	WASTE ACTIVATED SLUDGE
WG	WEIR GATE
WM	WATER METER
WSP	WELDED STEEL PIPE
WT	WEIGHT
WTR	WATER
WV	WATER VALVE
WWF	WELDED WIRE FABRIC
XMTR	TRANSMITTER

PIPE AND FITTING SYSTEM

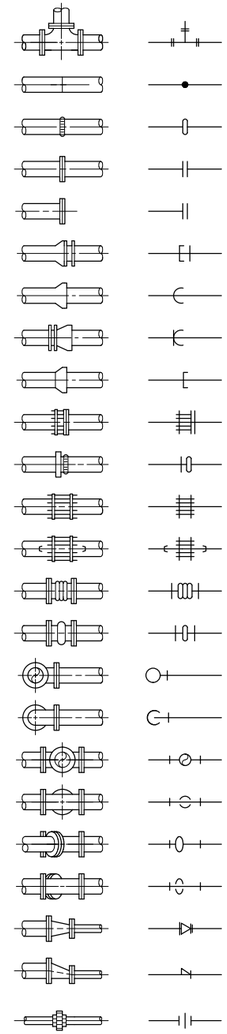

- FLANGED TEE
- WELDED JOINT
- GROOVED END JOINT
- FLANGED JOINT
- BLIND FLANGE
- MECHANICAL JOINT
- BELL & SPIGOT JOINT
- FLANGE X HUB ADAPTER
- HUB & SPIGOT JOINT (RUBBER GASKET)
- FLANGED COUPLING ADAPTER
- GROOVED END ADAPTER FLANGE
- FLEXIBLE COUPLING
- FLEXIBLE COUPLING WITH THRUST TIES
- STEEL BELLOWS XP JOINT
- ELASTOMER BELLOWS XP JOINT
- ELBOW UP (TOWARD VIEWER)
- ELBOW DOWN (AWAY FROM VIEWER)
- TEE UP (TOWARD VIEWER)
- TEE DOWN (AWAY FROM VIEWER)
- LATERAL UP (TOWARD VIEWER)
- LATERAL DOWN (AWAY FROM VIEWER)
- CONCENTRIC REDUCER
- ECCENTRIC REDUCER
- UNION

VALVE SYMBOLS

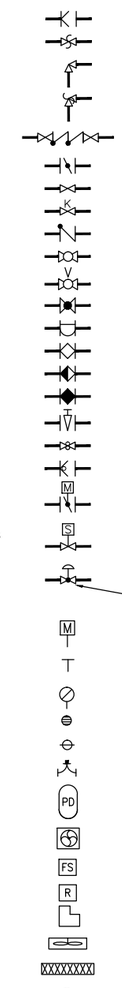

DOUBLE LEAF CHECK	DLCV
IN-LINE PRESSURE RELIEF	PRFV
ANGLE BACKPRESSURE	BPV
ANGLE BACKPRESSURE RELIEF	APRF
BACKFLOW PREVENTER	BFP
BUTTERFLY	BFV
GATE	GV
KNIFE GATE	KGV
SWING CHECK, CHECK	SCV CV
BALL	BLV
VEE-BALL	VBLV
GLOBE	GLV
DIAPHRAGM	DV
PLUG	PV
ECCENTRIC PLUG	EPV
LUBRICATED PLUG	LPV
NEEDLE VALVE	NV
PINCH VALVE	PNV
BALL CHECK	BCV
MOTOR OPERATED BUTTERFLY	MOBV
SOLENOID CONTROL	SOV
CONTROL FCV=FLOW CONTROL PRV=PRESSURE REDUCING AV =ALTITUDE VALVE	
VALVE OPERATOR	VO
VALVE STEM	VS
PRESSURE GAUGE	PG
FLOOR DRAIN	FD
CLEANOUT	CO
ANTISIPHON/BACKPRESSURE VALVE	ABV
PULSATION DAMPENER	PD
HYDRODYNAMIC MIXER	HM
FLOW SWITCH	FS
ROTAMETER	
METERING PUMP	
MIX CHAMBER	
STATIC MIXER	
FLOW METER	

LEGEND

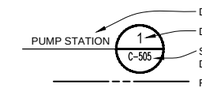

- DETAIL DESCRIPTION
- DETAIL NUMBER
- SHEET NUMBER WHERE DETAIL CAN BE FOUND
- RIGHT OF WAY/PROPERTY LINE
- CENTERLINE/BASELINE
- SD12 — EXIST STORM DRAIN & SIZE
- SS12 — EXIST SANITARY SEWER PIPE & SIZE
- W12 — EXIST WATER MAIN & SIZE
- IRRI12 — EXIST IRRIGATION LINE & SIZE
- T — EXIST TELEPHONE LINE
- E — EXIST UNDERGROUND ELECTRICAL LINE
- ET — EXIST ELECTRICAL/TELEPHONE LINE
- OE — EXIST OVERHEAD ELECTRICAL LINE
- G2 — EXIST BURIED GAS PIPE & SIZE
- EXIST DRAIN INLET
- SSMH — EXIST SANITARY SEWER MANHOLE
- SDMH — EXIST STORM DRAIN MANHOLE
- SSCO — EXIST SANITARY SEWER CLEANOUT
- X — X — EXIST CHAIN LINK FENCE
- EXIST STRUCTURE
- × 210.53 EG — SPOT ELEVATION & DESCRIPTION
- SURVEY CONTROL POINT
- H+T — HUB AND TACK SURVEY POINT
- N+T — NAIL AND TIN SURVEY POINT
- FH — EXIST FIRE HYDRANT
- TEL — EXIST TELEPHONE CABLE PEDESTAL
- PB — EXIST UTILITY PULL BOX
- EXIST LIGHT
- UP — EXIST UTILITY POLE
- EXIST TELEPHONE POLE W/ GUY WIRE
- WM — EXIST WATER METER
- WV — EXIST WATER VALVE
- GM — EXIST GAS METER
- EXIST TREE
- TOP/TOE OF BANK
- EXIST ROAD SIGN
- EXIST WELL

PRELIMINARY 30% SUBMITTAL

0 1/2 1

IF THIS BAR DOES NOT MEASURE 1" THEN DRAWING IS NOT TO FULL SCALE

REV	DATE	DESCRIPTION	APPR

PROJECT ENGINEER | REG NUMBER | EXP DATE

AECOM
1194 PACIFIC STREET, SUITE 204
SAN LUIS OBISPO, CA 93401
T 805.542.9840 F 805.542.9990
www.aecom.com

CITY OF EL PASO DE ROBLES
WATER TREATMENT PLANT PROJECT

ABBREVIATIONS AND LEGEND

DESIGNED:
DETAILED:
CHECKED:
APPROVED:
DATE: November 2012
AECOM PROJECT NO. 60264606
P.R. PROJECT NO.
CADD STDS. AECOM

G00-03
SHEET 3 OF -

DWG: V:\PASO ROBLES\60264606-WTP\000 CAD\PLANSET\1-GEN\G00-03.dwg Layout Name: 34x22 - Plotted by: Rodriguez, David Date: 11/28/2012 - 3:36 PM
XREFS: G-BD-PR IMAGES: CITY OF PASO LOGO_1.png

PLANT DESIGN CAPACITY	UNITS	VALUE
PEAK CAPACITY	MGD	2.4
	CFS	3.7
	GPM	1667
FIRM CAPACITY	MGD	1.2
	CFS	1.9
	GPM	833
MINIMUM CAPACITY	MGD	1
	CFS	1.6
	GPM	700

RAW WATER SUPPLY	UNITS	VALUE
LAKE INTAKE SCREEN OPENING	INCH	1
DESIGN FLOW	MGD	8
DESIGN HYDRAULIC GRADE LINE @ BUILDOUT	FEET	791
GUARANTEED HYDRAULIC GRADE LINE	FEET	N/A

DISSOLVED AIR FLOATATION (DAF)	UNITS	VALUE
TYPE: HIGH RATE PACKAGED	NUMBER	1
AVERAGE CAPACIITY	GPM	1,667
LOADING RATE (MAX)	GPM/FT2	11.6
FLOCCULATION TIME (MIN)	MINUTES	8
SLUDGE REMOVAL METHOD	TYPE	MECH

DAF SATURATOR	UNITS	VALUE
TYPE: SKID	NUMBER	1
PUMPS PER SKID	NUMBER	1+1
SATURATOR TANKS PER SKID	NUMBER	1

MEMBRANE FILTRATION SYSTEM	UNITS	VALUE
TYPE: PALL ARIA AP-6X PACKAGED	NUMBER	2
CAPACITY EACH	GPM	833
INSTALLED MODULES PER SKID	NUMBER	60
INSTANTANEOUS DESIGN FLUX	GFD	40
MICROFILTER PORE RATING	MICRON	0.1
MEMBRANE	MATERIAL	PVDF
PRE-STRAINER RATING	MICRON	300
INLET PRESSURE (MAX)	PSI	44

MEMBRANE AIR SUPPLY	UNITS	VALUE
TYPE: SINGLE STAGE ROTARY SCREW	NUMBER	1+1
CAPACITY EACH	CFS	XX
MOTOR: VFD	HP	XX

FILTRATE TRANSFER PUMPING STATION	UNITS	VALUE
TYPE: HORIZONTAL SPLIT CASE	NUMBER	2
CAPACITY EACH	GPM	900
MOTOR: VFD	HP	15
FILTRATE TANK	GAL	7,000

GRANULAR ACTIVATED CARBON (GAC)	UNITS	VALUE
TYPE: 20,000-LB CONTACTORS IN PARALLEL	NUMBER	4
EMPTY BED CONTACT TIME (MAX)	MINUTES	12

CLEARWELL	UNITS	VALUE
TYPE: CONCRETE SERPENTINE	NUMBER	1
OVERALL DIMENSIONS	FT	52'x34'
HEIGHT	FT	17
HEIGHT TO HIGH WATER LEVEL	FT	16
OPERATIONAL VOLUME	GAL	XX
TOTAL VOLUME	GAL	XX

HIGH SERVICE PUMP STATION	UNITS	VALUE
TYPE: VERTICAL TURBINE	NUMBER	2
CAPACITY EACH	GPM	900
MOTOR: VFD	HP	100

CHEMICAL BULK STORAGE	UNITS	PHASE 1
SODIUM PERMANGANATE (20%) - PROCESS 81		
TYPE: FRP BULK STORAGE TANK	NUMBER	1
VOLUME EACH	GALLONS	-
PACL - PROCESS 82		
TYPE: FRP BULK STORAGE TANK	NUMBER	2
VOLUME EACH	GALLONS	2,960
SODIUM HYPOCHLORITE (12.5%) - PROCESS 83		
TYPE: FRP BULK STORAGE TANK	NUMBER	2
VOLUME EACH	GALLONS	1,680
SODIUM HYDROXIDE (25%) - PROCESS 84		
TYPE: FRP BULK STORAGE TANK	NUMBER	1
VOLUME EACH	GALLONS	5,800

CHEMICAL USAGE	PROCESS FLOW			DESIGN DOSAGE			DESIGN FEED RATES			CHEMICAL FEED EQUIPMENT		
	UNITS	MINIMUM	MAXIMUM	UNITS	MINIMUM	MAXIMUM	UNITS	MINIMUM	MAXIMUM	TYPE	UNITS	CAPACITY
SODIUM PERMANGANATE (20%) - PROCESS 81												
INJECTION POINT: DAF STATIC MIXER	MGD	1	2.4	MG/L	0.5	3	GAL/HR	0.08	1.17	ELECT DIAPHRAGM	GAL/HR	-
PACL - PROCESS 82												
INJECTION POINT: DAF STATIC MIXER	MGD	1	2.4	MG/L	20	60	GAL/HR	0.60	4.50	ELECT DIAPHRAGM	GAL/HR	
SODIUM HYPOCHLORITE (12.5%) - PROCESS 83												
INJECTION POINT: PRE-CLEARWELL	MGD	1	2.4	MG/L	1	5	GAL/HR	0.35	4.38	ELECT DIAPHRAGM	GAL/HR	
INJECTION POINT: POST-CLEARWELL	MGD	1	2.4	MG/L	0.5	3	GAL/HR	0.18	2.63	ELECT DIAPHRAGM	GAL/HR	
SODIUM HYDROXIDE (25%) - PROCESS 84												
INJECTION POINT: POST-CLEARWELL	MGD	1	2.4	MG/L	2	20	GAL/HR	0.26	6.58	ELECT DIAPHRAGM	GAL/HR	

RAW WATER DESIGN CRITERIA

PARAMETER	DESIGN LIMIT
TURBIDITY	6 NTU AVG, 20 NTU 95%, 45 NTU MAX
TOC	2.5 - 6.0 MG/L
TRUE COLOR	40 UNITS
pH	6.5 - 8.5
TEMPERATURE	10 - 25 °C
ALKALINITY	75 - 125 MG/L AS $CaCO_3$
HARDNESS	85 - 150 MG/L AS $CaCO_3$
TOTAL COLIFORM	>1,600 MPN
CRYPTOSPORIDIUM	< 0.075 MPN/100 ML (Bin 1)
IRON	0.965 mg/L
MANGANESE	0.820 mg/L

PRELIMINARY
30% SUBMITTAL

0 1/2 1
IF THIS BAR DOES NOT MEASURE 1" THEN DRAWING IS NOT TO FULL SCALE

REV	DATE	DESCRIPTION	APPR
1			
2			
3			
4			

PROJECT ENGINEER | REG NUMBER | EXP DATE

AECOM
AECOM
1194 PACIFIC STREET, SUITE 204
SAN LUIS OBISPO, CA 93401
T 805.542.9840 F 805.542.9990
www.aecom.com

CITY OF EL PASO DE ROBLES
WATER TREATMENT PLANT PROJECT

DESIGN CRITERIA

DESIGNED:
DETAILED:
CHECKED:
APPROVED:
DATE: November 2012
AECOM PROJECT NO. 60264606
P.R. PROJECT NO.
CADD STDS. AECOM

G00-04
SHEET 4 OF -

DWG: V:\PASO ROBLES\60264606-WTP\000 CAD\PLANSET\1-GEN\G00-04.dwg Layout Name: 34x22 - Plotted by: Rodriguez, David Date: 11/28/2012 - 3:36 PM
XREFS: G-BD-PR IMAGES: CITY OF PASO LOGO_1.png -

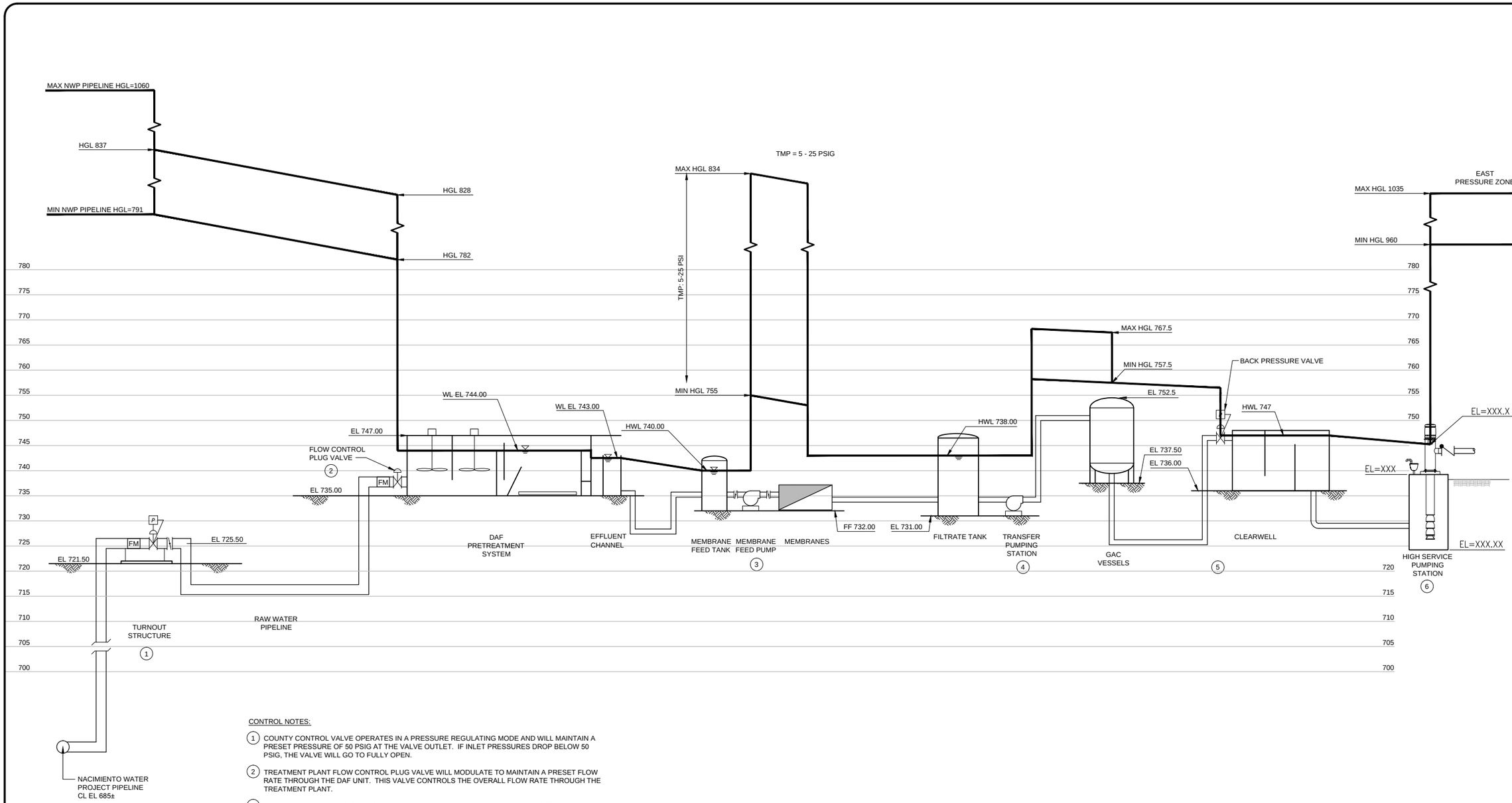

CONTROL NOTES:

1. COUNTY CONTROL VALVE OPERATES IN A PRESSURE REGULATING MODE AND WILL MAINTAIN A PRESET PRESSURE OF 50 PSIG AT THE VALVE OUTLET. IF INLET PRESSURES DROP BELOW 50 PSIG, THE VALVE WILL GO TO FULLY OPEN.
2. TREATMENT PLANT FLOW CONTROL PLUG VALVE WILL MODULATE TO MAINTAIN A PRESET FLOW RATE THROUGH THE DAF UNIT. THIS VALVE CONTROLS THE OVERALL FLOW RATE THROUGH THE TREATMENT PLANT.
3. THE SPEED OF THE VFD CONTROLLED MEMBRANE FEED PUMPS WILL BE ADJUSTED TO MAINTAIN AN AVERAGE FLOW RATE EQUAL TO THE OVERALL TREATMENT PLANT FLOW SET POINT AND WILL BE TRIMMED BASED ON THE WATER LEVEL IN THE MEMBRANE FEED TANKS.
4. THE SPEED OF THE VFD CONTROLLED FILTRATE BOOSTER PUMPS WILL BE ADJUSTED TO MAINTAIN A NEARLY CONSTANT FLOW RATE EQUAL TO THE OVERALL TREATMENT PLANT FLOW SET POINT AND WILL BE TRIMMED BASED ON THE AVERAGE WATER LEVEL IN THE FILTRATE TANK.
5. A PRESSURE SUSTAINING VALVE DESIGNED TO ENSURE BACKPRESSURE ON THE GAC VESSEL AIR RELEASE VALVE.
6. THE SPEED OF THE VFD CONTROLLED HIGH SERVICE PUMPS WILL BE ADJUSTED TO MAINTAIN A CONSTANT WATER LEVEL IN THE CLEARWELL

LEGEND:

XXX.XX / XXX.XX — HGL @ 6.0 MGD (INITIAL CAPACITY) / HGL @ 12.0 MGD (ULTIMATE CAPACITY)

PRELIMINARY
30% SUBMITTAL

0 1/2 1
IF THIS BAR DOES NOT MEASURE 1" THEN DRAWING IS NOT TO FULL SCALE

REV	DATE	DESCRIPTION	APPR
1			
2			
3			
4			

PROJECT ENGINEER | REG NUMBER | EXP DATE

AECOM
1194 PACIFIC STREET, SUITE 204
SAN LUIS OBISPO, CA 93401
T 805.542.9840 F 805.542.9990
www.aecom.com

CITY OF EL PASO DE ROBLES
WATER TREATMENT PLANT PROJECT

HYDRAULIC PROFILE

DESIGNED:
DETAILED:
CHECKED:
APPROVED:
DATE: November 2012
AECOM PROJECT NO. 60264606
P.R. PROJECT NO.
CADD STDS. AECOM

G00-05
SHEET 5 OF -

DWG: V:\PASO ROBLES\60264606-WTP\000 CAD\PLANSET\1-GEN\G00-05.dwg Layout Name: Layout1 – Plotted by: Rodriguez, David Date: 11/28/2012 – 3:37 PM
XREFS: G-BD-PR IMAGES: CITY OF PASO LOGO_1.png –

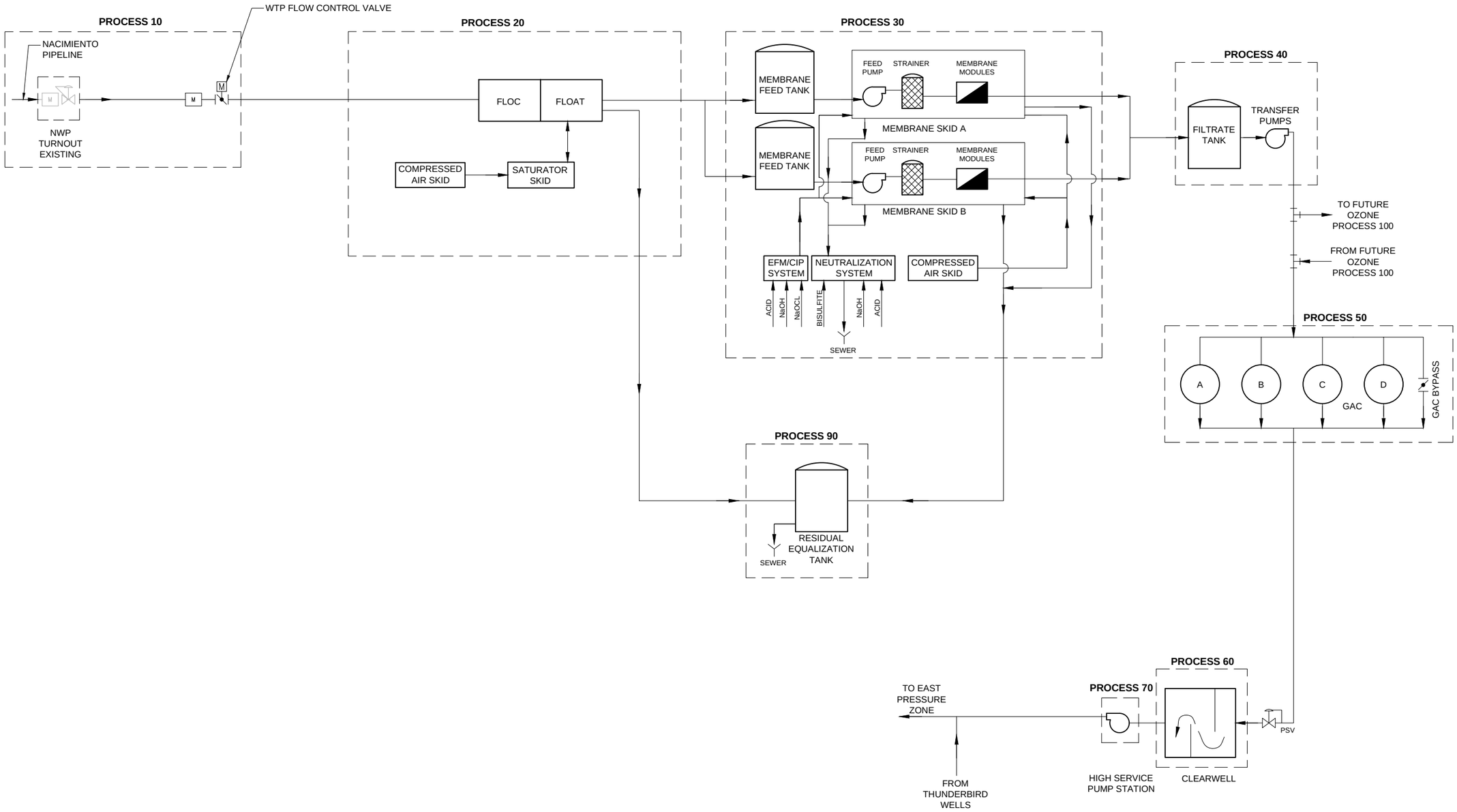

PRELIMINARY
30% SUBMITTAL

0 1/2 1
IF THIS BAR DOES NOT MEASURE 1" THEN DRAWING IS NOT TO FULL SCALE

REV	DATE	DESCRIPTION	APPR

PROJECT ENGINEER | REG NUMBER | EXP DATE

AECOM
AECOM
1194 PACIFIC STREET, SUITE 204
SAN LUIS OBISPO, CA 93401
T 805.542.9840 F 805.542.9990
www.aecom.com

CITY OF EL PASO DE ROBLES
WATER TREATMENT PLANT PROJECT

PROCESS FLOW DIAGRAM

DESIGNED:
DETAILED:
CHECKED:
APPROVED:
DATE: November 2012
AECOM PROJECT NO. 60264606
P.R. PROJECT NO.
CADD STDS. AECOM

G00-06
SHEET 6 OF -

DWG: V:\PASO ROBLES\60264606-WTP\000 CAD\PLANSET\1-GEN\G00-06.dwg Layout Name: Layout1 - Plotted by: Rodriguez, David Date: 11/28/2012 - 3:37 PM
XREFS: G-BD-PR IMAGES: CITY OF PASO LOGO_1.png

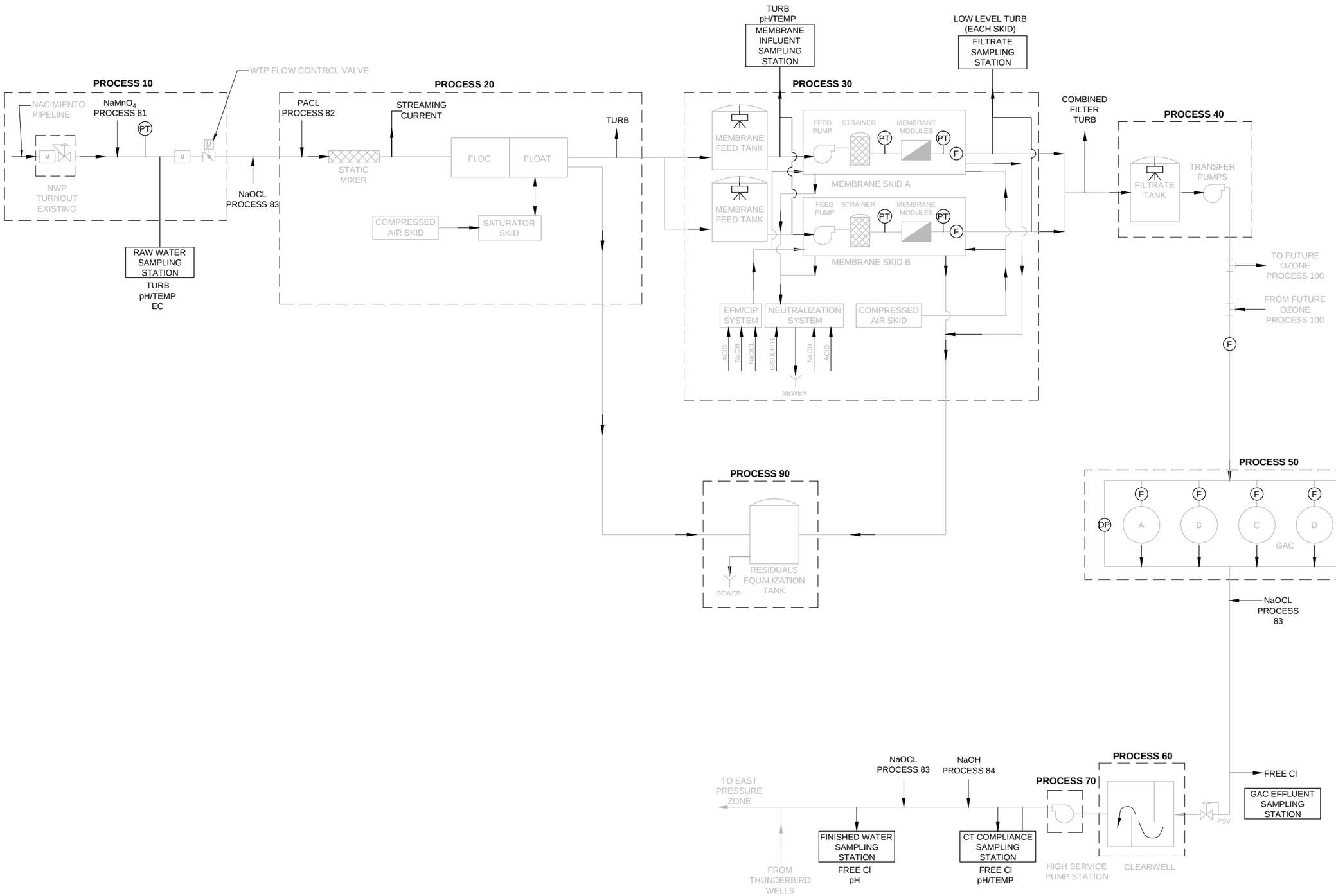

PRELIMINARY
30% SUBMITTAL

0 1/2 1
IF THIS BAR DOES NOT MEASURE 1" THEN DRAWING IS NOT TO FULL SCALE

REV	DATE	DESCRIPTION	APPR

PROJECT ENGINEER | REG NUMBER | EXP DATE

AECOM
AECOM
1194 PACIFIC STREET, SUITE 204
SAN LUIS OBISPO, CA 93401
T 805.542.9840 F 805.542.9990
www.aecom.com

CITY OF EL PASO DE ROBLES
WATER TREATMENT PLANT PROJECT

I & C PROCESS FLOW DIAGRAM

DESIGNED:
DETAILED:
CHECKED:
APPROVED:
DATE: November 2012
AECOM PROJECT NO. 60264606
P.R. PROJECT NO.
CADD STDS. AECOM

G00-07
SHEET 7 OF -

DWG: V:\PASO ROBLES\60264606-WTP\000 CAD\PLANSET\1-GEN\G00-07.dwg Layout Name: Layout1 - Plotted by: Rodriguez, David Date: 11/28/2012 - 3:37 PM
XREFS: G-BD-PR IMAGES: CITY OF PASO LOGO_1.png -

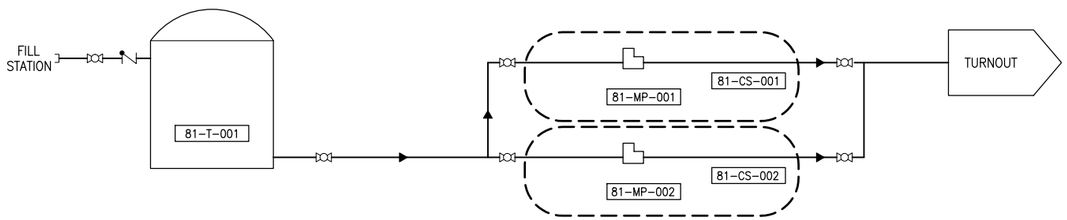

POTASSIUM PERMANGANATE SYSTEM-PROCESS 81

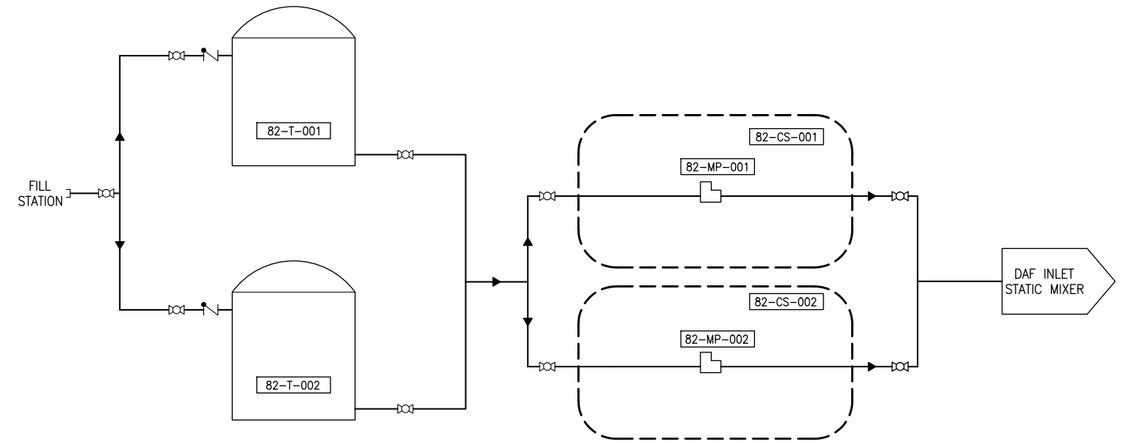

PACL FEED SYSTEM-PROCESS 82

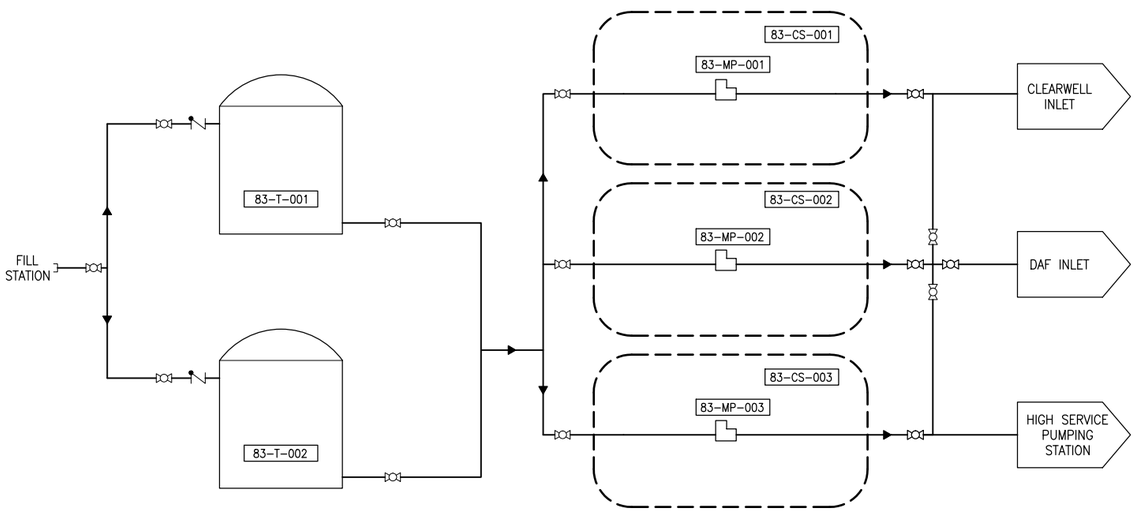

SODIUM HYPOCHLORITE FEED SYSTEM-PROCESS 83

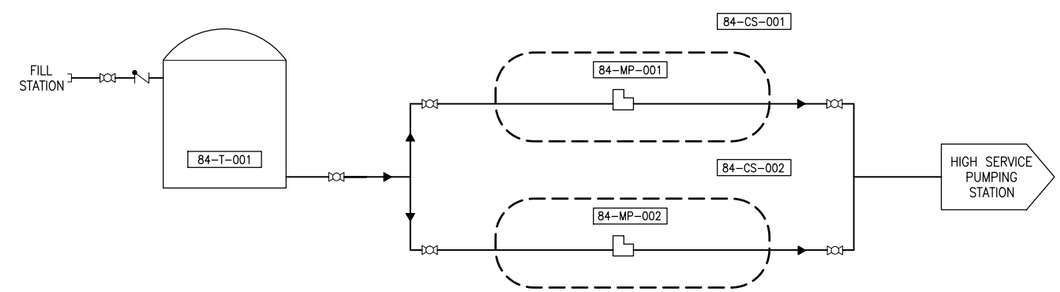

SODIUM HYDROXIDE FEED SYSTEM-PROCESS 84

NOTES:

1. DASHED BOUNDARIES INDICATE PACKAGED CHEMICAL FEED SKIDS
2. ID TAGS ARE BASED ON THE FOLLOWING FORMAT PROCESS NO. – DESCRIPTION – UNIT NO.

   MP= METERING PUMP
   CS= CHEMICAL SKID
   T=TANK
   Ⓕ = FLOW METER
   ⋈ = BALL VALVE
3. REFER TO DRAWING G00-09 FOR PACKAGED CHEMICAL SKID PIPING

PRELIMINARY 30% SUBMITTAL

0 1/2 1
IF THIS BAR DOES NOT MEASURE 1" THEN DRAWING IS NOT TO FULL SCALE

REV	DATE	DESCRIPTION	APPR

PROJECT ENGINEER | REG NUMBER | EXP DATE

AECOM
AECOM
1194 PACIFIC STREET, SUITE 204
SAN LUIS OBISPO, CA 93401
T 805.542.9840 F 805.542.9990
www.aecom.com

CITY OF EL PASO DE ROBLES
WATER TREATMENT PLANT PROJECT

PROCESS FLOW DIAGRAM (CHEMICAL 1 OF 2)

DESIGNED:
DETAILED:
CHECKED:
APPROVED:
DATE: November 2012
AECOM PROJECT NO. 60264606
P.R. PROJECT NO.
CADD STDS. AECOM

G00-08
SHEET 8 OF -

DWG: V:\PASO ROBLES\60264606-WTP\000 CAD\PLANSET\1-GEN\G00-08.dwg Layout Name: Layout1 – Plotted by: Rodriguez, David Date: 11/28/2012 – 3:37 PM
XREFS: G-BD-PR IMAGES: CITY OF PASO LOGO_1.png –

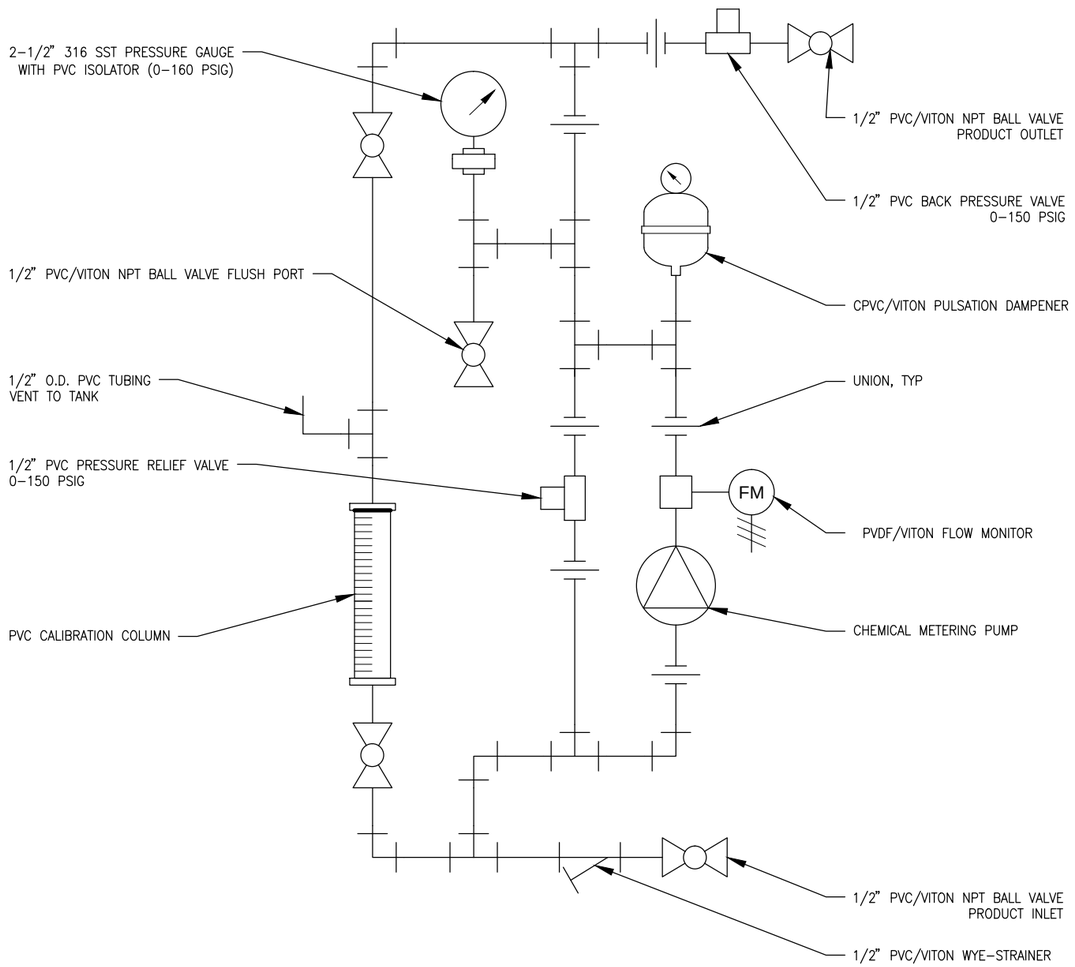

CHEMICAL METERING SKID SCHEMATIC

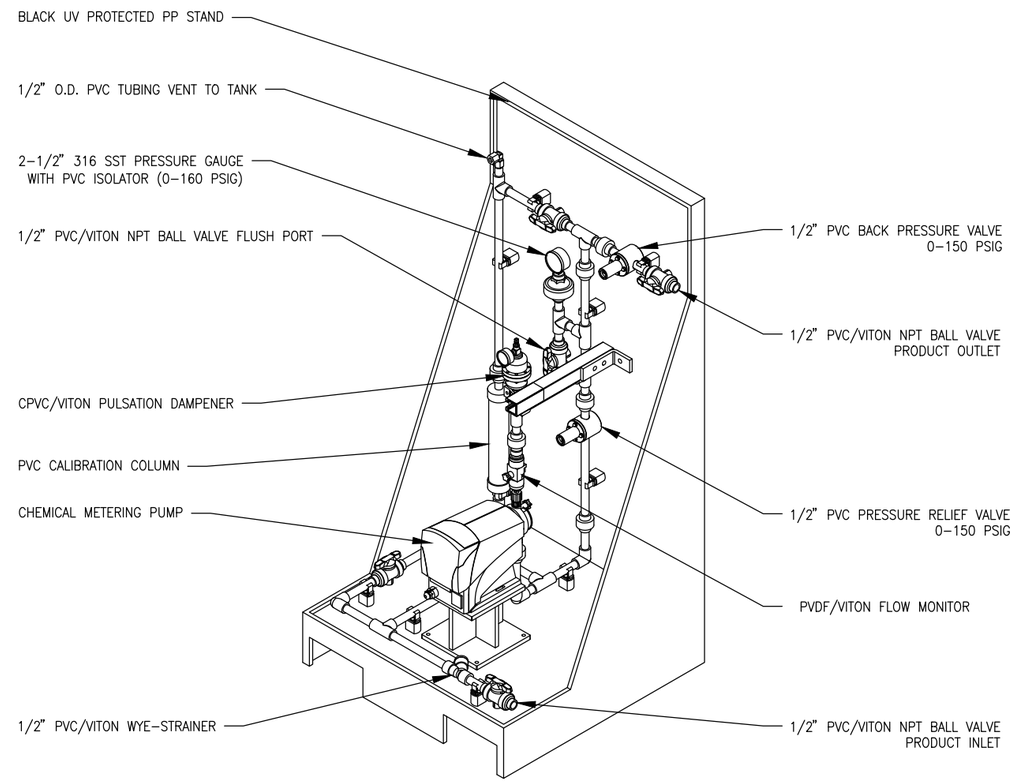

CHEMICAL METERING SKID ISOMETRIC VIEW

PRELIMINARY
30% SUBMITTAL

0 1/2 1
IF THIS BAR DOES NOT MEASURE 1" THEN DRAWING IS NOT TO FULL SCALE

REV	DATE	DESCRIPTION	APPR
1			
2			
3			
4			

PROJECT ENGINEER | REG NUMBER | EXP DATE

AECOM
AECOM
1194 PACIFIC STREET, SUITE 204
SAN LUIS OBISPO, CA 93401
T 805.542.9840 F 805.542.9990
www.aecom.com

CITY OF EL PASO DE ROBLES
WATER TREATMENT PLANT PROJECT

PROCESS FLOW DIAGRAM (CHEMICAL 2 OF 2)

DESIGNED:
DETAILED:
CHECKED:
APPROVED:
DATE: November 2012
AECOM PROJECT NO. 60264606
P.R. PROJECT NO.
CADD STDS. AECOM

G00-09
SHEET 9 OF -

DWG: V:\PASO ROBLES\60264606-WTP\000 CAD\PLANSET\1-GEN\G00-09.dwg Layout Name: Layout1 - Plotted by: Rodriguez, David Date: 11/28/2012 - 3:37 PM
XREFS: G-BD-PR IMAGES: CITY OF PASO LOGO_1.png

GENERAL NOTES:

1. PROCESSES HAVE BEEN NUMBERED AS SHOWN BELOW:
   PROCESS 10 NWP TURNOUT
   PROCESS 20 DISSOLVED AIR FLOATATION
   PROCESS 30 MEMBRANE FILTRATION
   PROCESS 40 BOOSTER PUMPING STATION
   PROCESS 50 GRANULAR ACTIVATED CARBON
   PROCESS 60 CLEARWELL
   PROCESS 70 HIGH SERVICE PUMPING STATION
   PROCESS 80 CHEMICAL SYSTEMS
   - PROCESS 81 PERMANGANATE
   - PROCESS 82 POLYALUMINUM CHLORIDE
   - PROCESS 83 SODIUM HYPOCHLORITE
   - PROCESS 84 SODIUM HYDROXIDE

   PROCESS 90 RESIDUALS MANAGEMENT
   PROCESS 100 FUTURE OZONE

2. DRAWING NAMING CONVENTION
   EACH DRAWING NAME HAS 3 PARTS. THEY ARE THE DISCIPLINE, THE PROCESS NUMBER AND A SEQUENTIAL PAGE IDENTIFIER. IN THE DRAWING NAME THE LAST "0" OF THE PROCESS NUMBER HAS BEEN DROPPED. FOR EXAMPLE SHEET P04–02 IS THE SECOND PROCESS DRAWING RELATED TO THE BOOSTER PUMPING STATION.

   ANY DRAWING WITH A "00" PREFIX DOES NOT REFER TO SPECIFIC PROCESS UNLESS NOTED OTHERWISE ON THE DRAWINGS.

3. VALVE AND EQUIPMENT NAMING CONVENTION
   EACH VALVE ID TAG HAS 3 PARTS. THE FIRST SHOWS THE PROCESS NUMBER, THE SECOND IDENTIFIES THE TYPE OF EQUIPMENT, AND THE LAST IS A SEQUENTIAL ITEM IDENTIFIER. FOR EXAMPLE 40–BWP–001 IS THE FIRST BACKWASH PUMP FOR THE TRIDENT FILTRATION AND FILTER BACKWASH SYSTEM.

4. COORDINATE NUMBERING CONVENTION
   201 COORDINATES FOR THE LAYOUT OF SURFACE FEATURES ARE IN THE 200'S AND CAN BE FOUND ON DRAWING C00–04.
   301 COORDINATES FOR GRADING FEATURES ARE IN THE 300'S AND CAN BE FOUND ON DRAWINGS C00–06 AND C00–07.
   401 COORDINATES FOR PIPING FEATURES ARE IN THE 400'S AND CAN BE FOUND ON DRAWING C00–10.

5. ANY CONTAMINATED SOIL ENCOUNTERED DURING THE WORK SHALL BE BROUGHT TO THE OWNER'S ATTENTION AND DISPOSED OF IS ACCORDANCE WITH THE REQUIREMENTS OF THE CONTRACT.

6. CONTRACTOR SHALL MAINTAIN CITY ACCESS TO THE SITE FOR MAINTAINING WATER OPERATIONS AT ALL TIMES.

7. LOCATE AND PROTECT EXISTING UTILITIES AND STRUCTURES. THE INDICATED LOCATIONS AND DEPTHS OF EXISTING UNDERGROUND STRUCTURES AND UTILITIES ARE APPROXIMATE AND BASED ON INFORMATION PROVIDED BY UTILITY COMPANIES AND/OR HAVE BEEN LOCATED IN THE FIELD. PRIOR TO EXCAVATION, PERFORM ADDITIONAL EXPLORATORY INVESTIGATIONS (POTHOLES), AS REQUIRED, TO DETERMINE OR CONFIRM LOCATION AND SIZE OF EXISTING UTILITIES AND PROTECT SAME FROM DAMAGE. NOTIFY CITY'S REPRESENTATIVE BY TELEPHONE AND IN WRITING OF ANY DISCREPANCIES.

8. AT LEAST SEVEN (7) WORKING DAYS BEFORE BEGINNING WORK, REQUEST UTILITY OWNERS TO MARK OR OTHERWISE INDICATE LOCATION OF SUBSURFACE FACILITIES. DETERMINE THE LOCATION AND DEPTH OF ALL SUBSURFACE FACILITIES WHICH HAVE BEEN MARKED BY THE RESPECTIVE OWNERS AND WHICH MAY AFFECT OR BE AFFECTED BY THE CONSTRUCTION ACTIVITY. TAKE DUE PRECAUTIONARY MEASURES TO PROTECT ALL UTILITIES OR STRUCTURES LOCATED AT THE SITE OR NEAR THE SITE.

9. SHEETING AND SHORING OF TRENCHES IS REQUIRED FOR WORKER PROTECTION IN CONFORMANCE WITH SPECIFICATION SECTION 007300 AND THE GENERAL CONDITIONS. SHEET AND SHORE TRENCHES TO PROTECT AGAINST:
   a. DAMAGE TO UTILITIES, FACILITIES, AND PROPERTY
   b. ADDITIONAL EXCAVATION AND BACKFILL
   c. ADDITIONAL PAVEMENT
   d. OTHER COSTS AND LIABILITIES ARISING FROM SOIL INSTABILITY

10. NOTIFY AND COORDINATE ALL RELATED WORK WITH THE FOLLOWING AGENCIES IN ACCORDANCE WITH THE SPECIFICATIONS AND THESE DRAWINGS.

    USA NORTH UTILITY LOCATING SERVICE
    NO LESS THAN TWO (2) WORKING DAYS PRIOR TO EXCAVATING, CALL
    1–800–227–2600, OR 1–800–642–2444

    CITY OF EL PASO DE ROBLES
    DITAS ESPERANZA
    THREE (3) WORKING DAYS PRIOR TO COMMENCING CONSTRUCTION ACTIVITIES,
    CALL (805) 237–3861

11. COORDINATE WITH CITY TO ENSURE UTILITY ENCROACHMENT/CROSSING PERMITS ARE IN PLACE PRIOR TO CONSTRUCTION.

12. COMPLY WITH REQUIREMENTS OF MITIGATION, MONITORING AND REPORTING PROGRAM.

13. VERIFY DIMENSIONS AND CONDITIONS AT THE SITE BEFORE STARTING WORK. ANY CONFLICT BETWEEN DETAILS OR DIMENSIONS ON THE DRAWINGS SHALL BE REPORTED PROMPTLY TO THE CITY'S REPRESENTATIVE WHO WILL DETERMINE THE INTENT OF THE DRAWINGS.

14. IF FENCES ARE REMOVED FOR CONSTRUCTION, REPLACE WITH EQUAL OR BETTER FENCING MATERIAL.

15. CONTRACTOR WORK AREA IS COMPRISED OF UNION PACIFIC RAIL ROAD PROPERTY, CITY OF PASO ROBLES RIGHT–OF–WAY, AND UTILITY EASEMENTS.

16. COMPLY WITH REQUIREMENTS OF THE ENCROACHMENT PERMIT ISSUED BY THE U.P.R.R. FOR CROSSING UNDER UNION PACIFIC RAILROAD TRACKS.

17. RESTORE ALL PAVEMENT, CONCRETE, ASPHALT, GRAVEL AND DRIVEWAY SURFACES REMOVED OR DAMAGED DURING CONSTRUCTION UNLESS OTHERWISE INDICATED ON THE PLANS. PAVEMENT RESTORATION ABOVE PIPELINE TRENCHES SHALL BE PER TRENCH DETAIL. OTHER SURFACES SHALL BE RESTORED IN–KIND UNLESS INDICATED OTHERWISE.

18. MAINTAIN ON–SITE THE LATEST SIGNED CONSTRUCTION DRAWINGS AT ALL TIMES. MAINTAIN A COMPLETE AND ACCURATE RECORD OF ALL CHANGES IN CONSTRUCTION FROM THAT SHOWN ON THE PLANS AND SPECIFICATIONS FOR THE PURPOSE OF PROVIDING A BASIS FOR RECORD DRAWINGS. NO CHANGES SHALL BE MADE WITHOUT PRIOR WRITTEN APPROVAL OF THE CITY'S REPRESENTATIVE.

19. FURNISH AND MAINTAIN CHEMICAL TOILETS FOR USE BY WORKERS AND SUBCONTRACTORS.

20. INSTALL AND MAINTAIN EROSION CONTROL MEASURES DURING CONSTRUCTION. THESE MEASURES WILL BE SUBJECT TO REVIEW AND APPROVAL BY THE CITY'S AND OR GOVERNING AGENCY'S REPRESENTATIVES.

21. PREVENT CONSTRUCTION TRAFFIC FROM TRACKING SEDIMENT AND DEBRIS ON TO PRIVATE, CITY, AND STATE ROADS OR RIGHT–OF–WAY.

22. SURVEY PREPARED BY WALLACE GROUP.

23. PROTECT ADJACENT PROPERTIES DURING THE WORK AND REPAIR DAMAGE TO LANDSCAPING, PAVING, IRRIGATION, STRUCTURES, ETC., CAUSED BY WORK.

24. STATIONING AND DISTANCES SHOWN ON THE DRAWINGS ARE BASED ON HORIZONTAL MEASUREMENTS UNLESS NOTED OTHERWISE.

25. LABELED RIM ELEVATIONS ARE APPROXIMATE. ADJUST CLEANOUT LIDS AND COVER TO MATCH GRADE.

26. JETTING, TRENCH FLOODING, ETC. TO ACHIEVE COMPACTION OF BACKFILL MATERIALS WILL NOT BE ALLOWED.

27. REPLACE ALL SIGNS, CURBS, GUTTERS, PAVEMENT MARKERS, LANDSCAPING AND OTHER OBJECTS DESTROYED OR REMOVED TEMPORARILY DUE TO CONSTRUCTION OPERATIONS. THE SURROUNDING SHALL BE RETURNED TO ORIGINAL CONDITION AFTER COMPLETION OF THE WORK TO THE SATISFACTION OF THE OWNER'S REPRESENTATIVE.

28. SERVICE LATERALS (I.E. SEWER, WATER, GAS, ELECTRIC, COMMUNICATIONS) ARE NOT ALL SHOWN ON THE PLANS. LOCATE AND PROTECT ALL SERVICE LATERALS PER SPECIFICATION SECTION 020120. REPLACE OR REPAIR SERVICE LATERALS DAMAGED BY CONSTRUCTION.

29. PROTECT OAKS TREES PER CITY TREE ORDINANCE No. 835 N.S..

PIPING NOTES:

1. ALL JOINTS ON BURIED PIPING, EXCEPT SEWER AND STORM DRAIN, SHALL BE RESTRAINED.
2. BURIED JOINTS AND FITTINGS SHALL BE FLANGED, RESTRAINED MECHANICAL JOINT, OR RESTRAINED PUSH ON FITTINGS UNLESS SPECIFICALLY NOTED ON THE DRAWINGS.
3. ADDITIONAL FITTINGS MAY BE ADDED TO BURIED PIPING TO INCREASE CONSTRUCTABILITY AT THE CONTRACTOR'S DISCRETION PROVIDED ADEQUATE THRUST RESTRAINT IS MAINTAINED. ADDITIONAL JOINTS/ FITTINGS SHALL BE AT NO COST TO THE OWNER.
4. FLANGE CONNECTIONS SHALL BE PROVIDED AT ALL FLANGED VALVES.
5. FABRICATED STEEL SPECIALS MAY BE USED IN LIEU OF FLANGED CONNECTIONS.
6. ANYWHERE A STORM DRAIN OR WASTE LINE CROSSES A WATER MAIN EITHER:
   a) ENCASE PIPE IN CONCRETE 10' CLEAR ON EACH SIDE PER THE PLANS; OR
   b) CENTER A 20' PIPE STICK ON THE CROSSING.
7. ALL ABOVE GROUND PIPING SHALL BE SUPPORTED PER SPEC SECTION 400764.
8. ALL PIPING SHOWN SCREENED/HALF–TONE ARE EITHER EXISTING OR NOT IN CONTRACT, AS NOTED.

GRADING NOTES:

1. THE CONTRACTOR IS RESPONSIBLE FOR ALL IMPORT AND EXPORT OF EARTH MATERIAL. EARTHWORK IS UNCLASSIFIED. THE CONTRACTOR SHALL ACCOUNT FOR SHRINKAGE AND EXPANSION, AND IF NECESSARY CONDUCT AN INVESTIGATION TO DETERMINE THE SHRINKAGE AND EXPANSION FACTORS. THE CONTRACTOR WILL NOT BE COMPENSATED FOR ADDITIONAL EARTHWORK NOT INCLUDED AT THE TIME OF THE BID.
2. THE CONTRACTOR IS RESPONSIBLE FOR DISPOSAL OF ALL EXCESS SOIL.
3. ALL SITE GRADING SHALL COMPLY WITH THE 2010 CALIFORNIA BUILDING CODE.
4. THE GROUND IMMEDIATELY ADJACENT TO ALL FOUNDATIONS SHALL BE SLOPED AWAY FROM THE BUILDING AT A SLOPE OF NOT LESS THAN 2% FOR A MINIMUM DISTANCE OF 10 FEET MEASURED PERPENDICULAR TO THE FACE OF THE WALL. IF PHYSICAL OBSTRUCTIONS OR LOT LINES PROHIBIT 10 FEET OF HORIZONTAL DISTANCE FROM THE FOUNDATION, THEN A SWALE THAT RUNS PARALLEL TO THE FOUNDATION MAY BE USED AND WILL BE REQUIRED TO BE A MINIMUM SLOPE OF 2% WITHIN 10 FEET OF THE BUILDING FOUNDATION. ALL OTHER SITE GRADING OUTSIDE OF THE BUILDING ENVELOPE IS REQUIRED TO BE A MINIMUM OF 0.5%.
5. RECOMMENDATIONS AS OUTLINED IN THE FOLLOWING GEOTECHNICAL INVESTIGATION REPORT BY FUGRO SHALL BECOME REQUIREMENTS FOR THIS DEVELOPMENT:
   - GEOTECHNICAL DATA REPORT, DATED FEBRUARY 5, 2009
   - GEOTECHNICAL INTERPRETIVE REPORT, DATED FEBRUARY 5, 2009
   - TBD
6. THE LIMITS OF GRADING SHALL BE ALONG THE PROPERTY LINE UNLESS NOTED OTHERWISE ON THE PLANS.

PRELIMINARY
30% SUBMITTAL

0 1/2 1
IF THIS BAR DOES NOT MEASURE 1" THEN DRAWING IS NOT TO FULL SCALE

REV	DATE	DESCRIPTION	APPR

PROJECT ENGINEER REG NUMBER EXP DATE

AECOM
AECOM
1194 PACIFIC STREET, SUITE 204
SAN LUIS OBISPO ,CA 93401
T 805.542.9840 F 805.542.9990
www.aecom.com

CITY OF EL PASO DE ROBLES
WATER TREATMENT PLANT PROJECT

GENERAL NOTES

DESIGNED:
DETAILED:
CHECKED:
APPROVED:
DATE: November 2012
AECOM PROJECT NO. 60264606
P.R. PROJECT NO.
CADD STDS. AECOM

C00-01
SHEET 10 OF -

DWG: V:\PASO ROBLES\60264606-WTP\000 CAD\PLANSET\2-CIVIL\C00-01.dwg Layout Name: Layout1 – Plotted by: Rodriguez, David Date: 11/28/2012 – 3:38 PM
XREFS: G–BD–PR IMAGES: CITY OF PASO LOGO_1.png –

LOCAL CONTROL POINTS	NORTHING	EASTING	ELEVATION	DESCRIPTION
13	2413050.84	5761284.81	731.34	SET PK NAIL
14	2412202.77	5761359.98	732.63	SET PK NAIL
15	2412396.09	5761232.05	736.58	SET PK NAIL
17	2412705.86	5761352.46	727.65	SET PK NAIL
18	2413010.25	5761384.99	728.41	SET SCRIBED X
19	2413070.13	5761716.93	721.34	SET #5 REBAR
21	2412992.32	5761334.97	730.45	FOUND BM THUNDERBIRD 13
34	2411478.05	5761134.39	739.04	SET 2"X2" AND TACK
37	2412384.87	5761295.77	736.10	FOUND BM THUNDERBIRD 17
38	2411799.37	5761330.54	736.69	SET #5 REBAR
90	2412981.33	5761777.14	721.91	FOUND BM THUNDERBIRD 10

NOTES:

1. THIS MAP REPRESENTS A SURVEY MADE BY WALLACE GROUP ON AUGUST 14–16, 2007.

BASIS OF BEARINGS
THIS SURVEY TIED TO ONE "B" ORDER STATION AND ONE FIRST ORDER STATION OF THE HIGH PRECISION GEODETIC NETWORK (HPGN). THOSE STATIONS ARE THE NATIONAL GEODETIC SURVEY CONTROL POINTS DESIGNATED "PRB AP 1965 STA B2", HAVING A PUBLISHED POSITION OF NORTHING 2,443,008.07', EASTING 5,781,265.39'; AND "HPGN D 05 ML", HAVING A PUBLISHED POSITION OF NORTHING 2,431350.01', EASTING 5,765,395.56'. THE RESULTING BEARING FROM "PRB AP 1965 STA B2" TO "HPGN D 05 ML" BEING: S 53°41'55.69" W. THE BEARINGS SHOWN HEREON ARE REFERENCED TO CCS83, ZONE 5 GRID NORTH.

BASIS OF ELEVATIONS
VERTICAL CONTROL IS BASED ON CITY OF PASO ROBLES BENCHMARK "TBIRD–13" HAVING AN ELEVATION OF 730.45 PER CITY OF PASO ROBLES BENCHMARK BOOK.

CONTOUR INTERVAL
CONTOUR INTERVAL FOR FIELD MAPPING IS 1'. THIS IS THE AREA INSIDE THE CHAIN LINK FENCE SURROUNDING THE THUNDERBIRD WELL SITE. CONTOUR INTERVAL IS 2' FOR THE AERIAL MAPPING SHOWN, SEE NOTE 3.

BASIS OF MEASUREMENTS
ALL MEASUREMENTS LISTED, SHOWN AND REPRESENTED HEREON ARE BASED ON GRID DISTANCES OF THE CALIFORNIA COORDINATE SYSTEM OF 1983 ZONE 5 PROJECTION. THE COMBINED SCALE FACTOR FOR THE PROJECT IS 0.99995128. THIS SCALE FACTOR WAS CALCULATED USING AN ELEVATION OF 730.45 FEET FOR "BM THUNDERBIRD 13" (PT. NO. 21). DIVIDE THE DISTANCES HEREON BY THE COMBINED SCALE FACTOR TO OBTAIN GROUND DISTANCES. ALL DISTANCES SHOWN ARE U.S. SURVEY FEET.

2. AERIAL SURVEY ORTHOPHOTOGRAPHY PRODUCED BY:
GOLDEN STATE AERIALS, INC.
3195 MCMILLAN RD. SUITE E
SAN LUIS OBISPO, CA 93401
PHONE: (805) 549–0399

PHOTOGRAPHY DATED: MARCH 2005

THIS AERIAL MAPPING IS SHOWN OUTSIDE OF THE CHAIN LINK FENCE SURROUNDING THE THUNDERBIRD WELL SITE. THE CONTOUR INTERVAL IS 2' FOOT.

3. UNDERGROUND UTILITY LOCATIONS ARE PLOTTED BASED ON ABOVE GROUND PAINT MARKS BY OTHERS, ABOVE GROUND SURFACE STRUCTURES AND RECORD DRAWINGS. ACTUAL LOCATION MAY DIFFER. ADDITIONAL UNDERGROUND UTILITY LINES MAY EXIST. FOR INFORMATION REGARDING UTILITY LOCATION, SIZE, DEPTH, CONDITION, AND CAPACITY CONTACT UTILITY OR MUNICIPAL/PUBLIC SERVICE FACILITY.

4. EASEMENTS ARE BASED ON CUESTA PTR T7800675 DATED 08/02/2007.
070/OR/358 BLANKET GAS LINE EASEMENT OVER LOTS 1 & 2 A/MB/164.
3491/OR/822 BLANKET DRAINAGE EASEMENT OVER ALL THE PORTION OF LOT 2 A/MB/164.

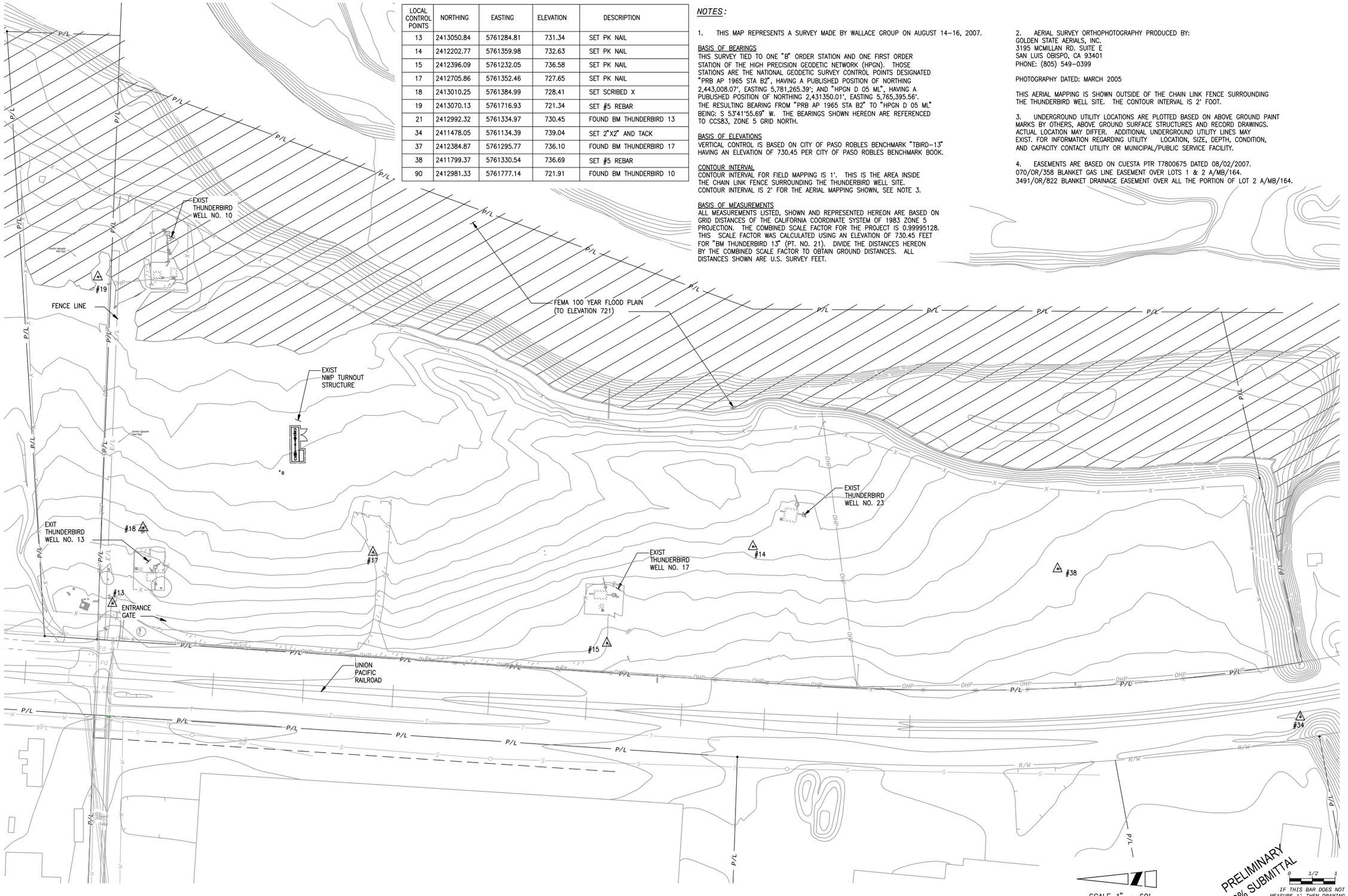

REV	DATE	DESCRIPTION	APPR

PROJECT ENGINEER | REG NUMBER | EXP DATE

AECOM
AECOM
1194 PACIFIC STREET, SUITE 204
SAN LUIS OBISPO, CA 93401
T 805.542.9840 F 805.542.9990
www.aecom.com

CITY OF EL PASO DE ROBLES
WATER TREATMENT PLANT PROJECT

SITE SURVEY CONTROL AND NOTES

DESIGNED: JJR
DETAILED: JPF
CHECKED:
APPROVED:
DATE: November 2012
AECOM PROJECT NO. 60264606
P.R. PROJECT NO.
CADD STDS. AECOM

C00-01A
SHEET
- OF -

DWG: V:\PASO ROBLES\60264606-WTP\000 CAD\PLANSET\2-CIVIL\C00-01A.dwg Layout Name: Layout1 – Plotted by: Rodriguez, David Date: 11/28/2012 – 3:39 PM
XREFS: C-Y-BOUNDARY-E – C-W-UTILITY-E – C-Y-TOPO-EX – C-Y-FEATURES-E – G-BD-PR IMAGES: CITY OF PASO LOGO_1.png –

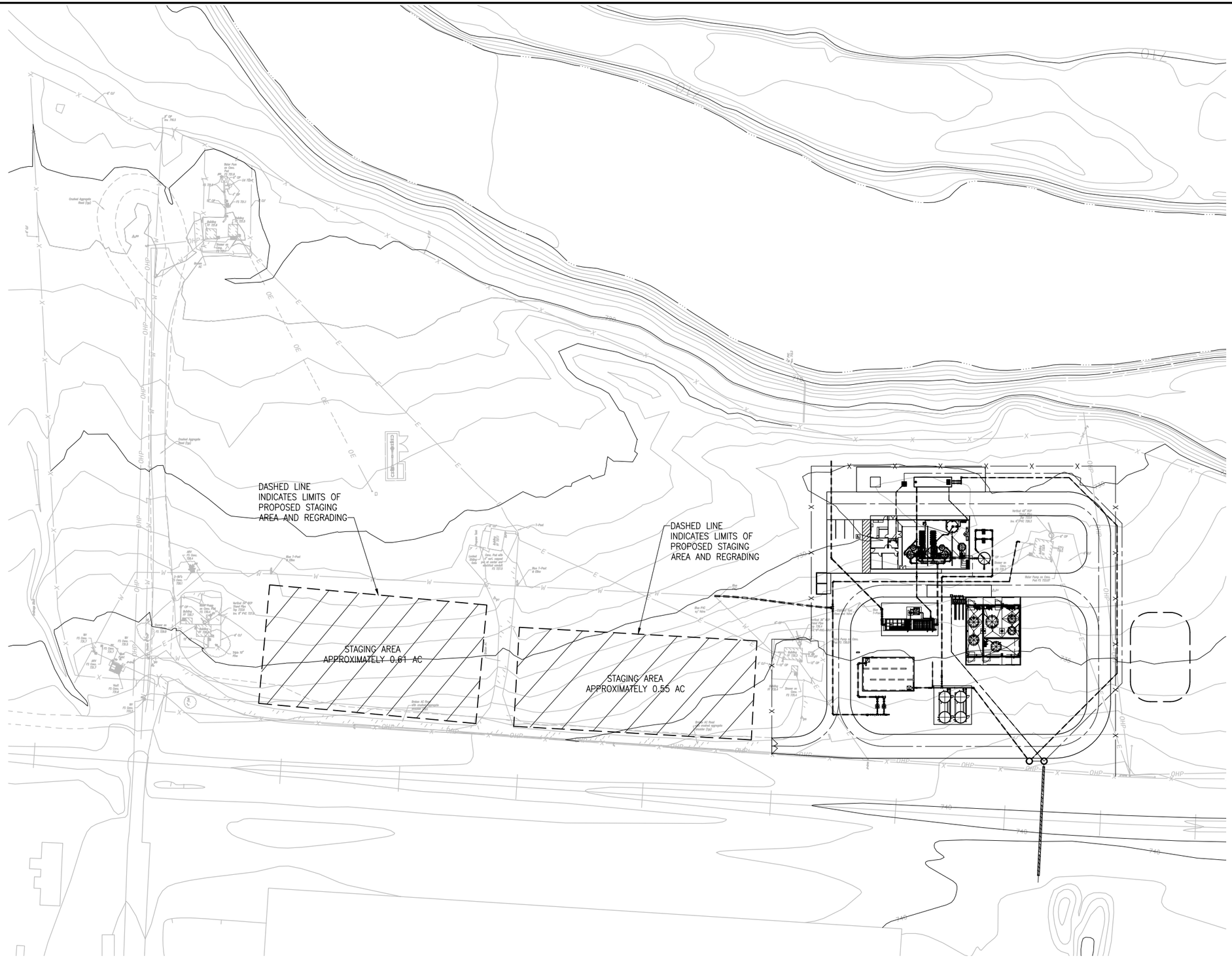

STAGING NOTES:

1. CONTRACTOR IS REQUIRED TO RETURN STAGING AREA TO PREVIOUS CONDITION PRIOR TO PROJECT COMPLETION.
2. ACCESS TO EXISTING FACILITIES IS TO REMAIN AT ALL TIMES.

SCALE 1" = 50'

PRELIMINARY
30% SUBMITTAL

0 1/2 1
IF THIS BAR DOES NOT MEASURE 1" THEN DRAWING IS NOT TO FULL SCALE

REV	DATE	DESCRIPTION	APPR

PROJECT ENGINEER | REG NUMBER | EXP DATE

AECOM
AECOM
1194 PACIFIC STREET, SUITE 204
SAN LUIS OBISPO, CA 93401
T 805.542.9840 F 805.542.9990
www.aecom.com

CITY OF EL PASO DE ROBLES
WATER TREATMENT PLANT PROJECT

CONSTRUCTION & STAGING PLAN

DESIGNED:
DETAILED:
CHECKED:
APPROVED:
DATE: November 2012
AECOM PROJECT NO. 60264606
P.R. PROJECT NO.
CADD STDS. AECOM

C00-02
SHEET 12 OF -

DWG: V:\PASO ROBLES\60264606-WTP\000 CAD\PLANSET\2-CIVIL\C00-02.dwg Layout Name: 34x22 - Plotted by: Rodriguez, David Date: 11/29/2012 - 8:15 AM
XREFS: C-BD-PR - C-Y-FEATURES-E - C-Y-TOPO-EX - C-LP-PR - S-RP-06 - D-FP-CHEM-PIPING - S-NP-09 - A-FP-MEMB IMAGES: CITY OF PASO LOGO_1.png -

GENERAL DEMOLITION NOTES:

1. SEE SPECIFICATION SECTION 024100 FOR DETAILED REQUIREMENTS.

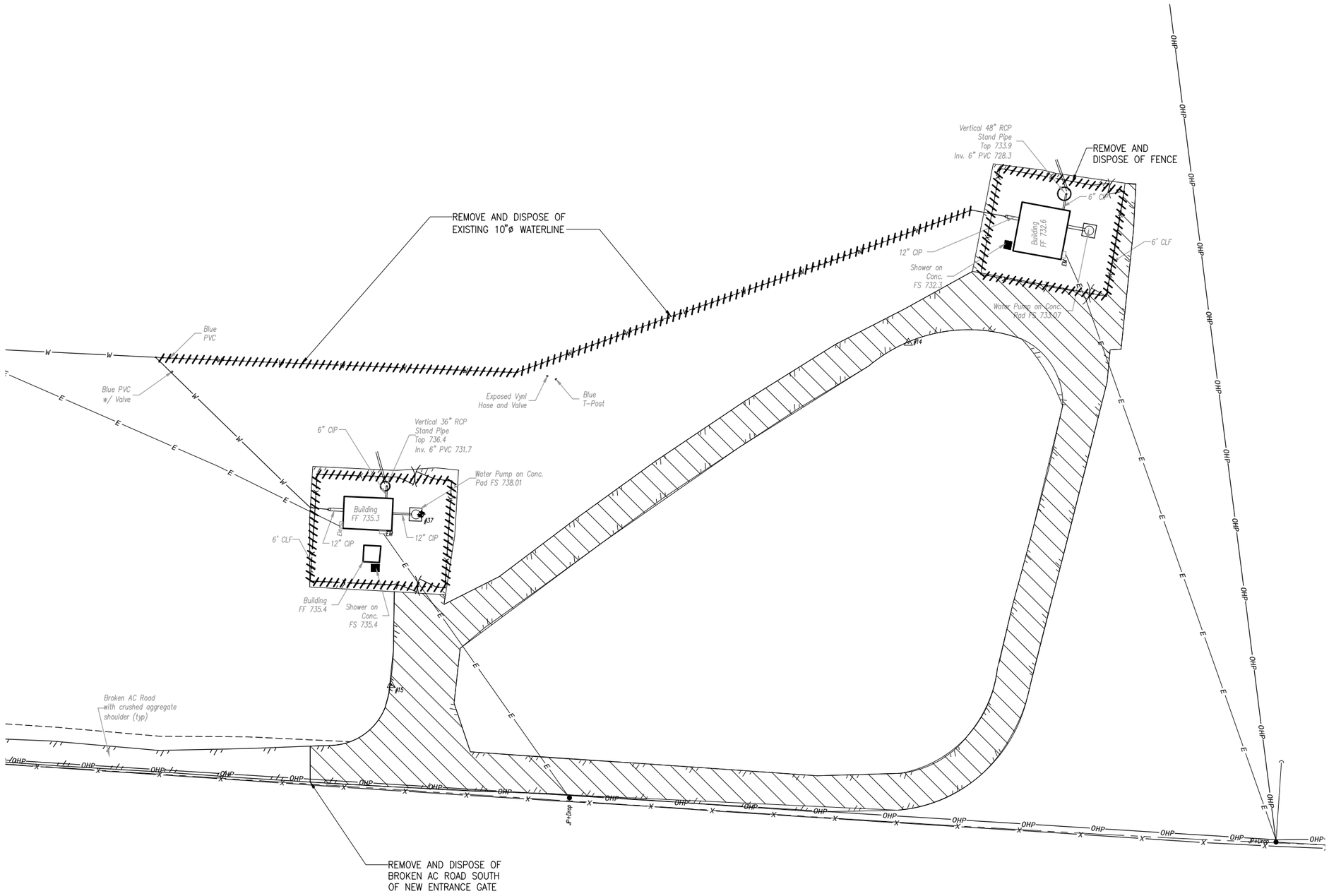

SCALE 1" = 20'

PRELIMINARY
30% SUBMITTAL

0 1/2 1
IF THIS BAR DOES NOT MEASURE 1" THEN DRAWING IS NOT TO FULL SCALE

REV	DATE	DESCRIPTION	APPR
1			
2			
3			
4			

PROJECT ENGINEER | REG NUMBER | EXP DATE

AECOM
AECOM
1194 PACIFIC STREET, SUITE 204
SAN LUIS OBISPO, CA 93401
T 805.542.9840 F 805.542.9990
www.aecom.com

CITY OF EL PASO DE ROBLES
WATER TREATMENT PLANT PROJECT

SITE DEMOLITION PLAN

DESIGNED:
DETAILED:
CHECKED:
APPROVED:
DATE: November 2012
AECOM PROJECT NO. 60264606
P.R. PROJECT NO.
CADD STDS. AECOM

C00-03
SHEET
- OF -

DWG: V:\PASO ROBLES\60264606-WTP\000 CAD\PLANSET\2-CIVIL\C00-03.dwg Layout Name: 34x22 - Plotted by: Rodriguez, David Date: 11/28/2012 - 3:39 PM
XREFS: G-BD-PR - C-Y-TOPO-EX - C-Y-FEATURES-E - C-W-UTILITY-E - C-Y-BOUNDARY-E IMAGES: CITY OF PASO LOGO_1.png -

LAYOUT COORDINATES

POINT	NORTHING	EASTING
201		
202		
203		
204		
205		
206		
207		
208		
209		
210		
211		
212		
213		
214		
215		
216		
217		
218		
219		
220		
221		
222		
223		
224		
225		
226		
227		
228		
229		
230		
231		
232		
233		
234		
235		
236		
237		
238		
239		
240		
241		
242		
243		
244		
245		

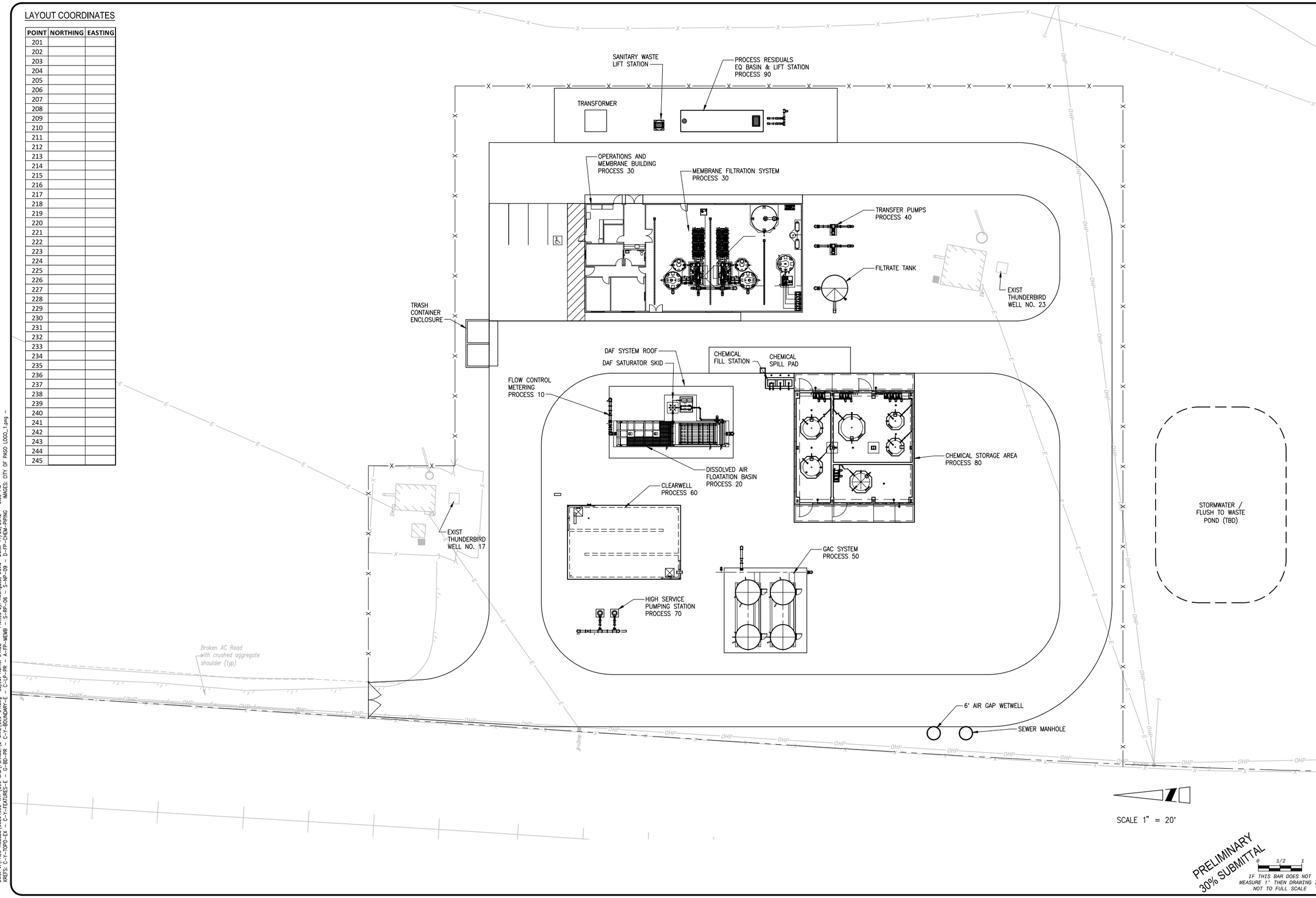

REV	DATE	DESCRIPTION	APPR

PROJECT ENGINEER | REG NUMBER | EXP DATE

AECOM
AECOM
1194 PACIFIC STREET, SUITE 204
SAN LUIS OBISPO, CA 93401
T 805.542.9840 F 805.542.9990
www.aecom.com

CITY OF EL PASO DE ROBLES
WATER TREATMENT PLANT PROJECT

SITE PLAN

DESIGNED:
DETAILED:
CHECKED:
APPROVED:
DATE: November 2012
AECOM PROJECT NO. 60264606
P.R. PROJECT NO.
CADD STDS. AECOM

C00-04
SHEET 14 OF -

DWG: V:\PASO ROBLES\60264606-WTP\000 CAD\PLANSET\2-CIVIL\C00-04.dwg Layout Name: 34x22 – Plotted by: Rodriguez, David Date: 11/28/2012 – 3:39 PM
XREFS: C-Y-TOPO-EX – C-Y-FEATURES-E – G-BD-PR – C-Y-BOUNDARY-E – C-LP-PR – A-FP-MEMB – S-RP-06 – S-NP-09 – D-FP-CHEM-PIPING IMAGES: CITY OF PASO LOGO_1.png

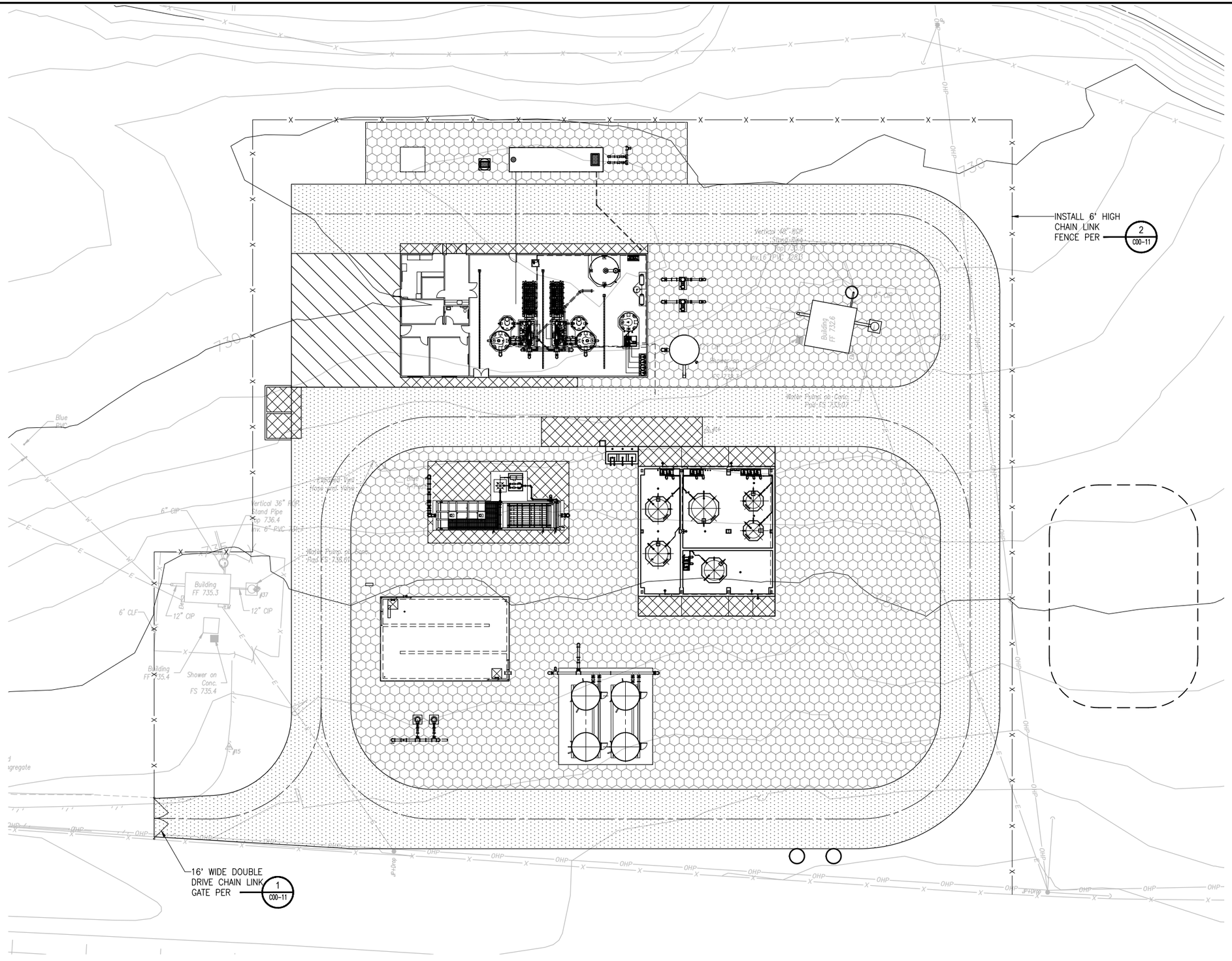

NOTES:

LEGEND

- ASPHALT CONCRETE PAVEMENT — 1 C00-12
- CONCRETE SLAB (SEE STRUCTURAL DRAWINGS)
- GRAVEL ROAD — 3 C00-12
- 3" CRUSHED ROCK SURFACE — 2 C00-12

PRELIMINARY 30% SUBMITTAL

0 1/2 1

IF THIS BAR DOES NOT MEASURE 1" THEN DRAWING IS NOT TO FULL SCALE

REV	DATE	PROJECT ENGINEER	DESCRIPTION	REG NUMBER	EXP DATE	APPR

AECOM

AECOM
1194 PACIFIC STREET, SUITE 204
SAN LUIS OBISPO, CA 93401
T 805.542.9840 F 805.542.9990
www.aecom.com

CITY OF EL PASO DE ROBLES
INCORPORATED 1889

CITY OF EL PASO DE ROBLES
WATER TREATMENT PLANT PROJECT

GRADING AND PAVING PLAN

DESIGNED:
DETAILED:
CHECKED:
APPROVED:
DATE: November 2012
AECOM PROJECT NO. 60264606
P.R. PROJECT NO.
CADD STDS. AECOM

C00-05
SHEET
- OF -

DWG: V:\PASO ROBLES\60264606-WTP\000 CAD\PLANSET\2-CIVIL\C00-05.dwg Layout Name: 34x22 - Plotted by: Rodriguez, David Date: 11/28/2012 - 3:40 PM
XREFS: G-BD-PR - C-Y-FEATURES-E - C-Y-TOPO-EX - C-LP-PR - S-RP-06 - D-FP-CHEM-PIPING - S-NP-09 - A-FP-MEMB IMAGES: CITY OF PASO LOGO_1.png -

PIPING COORDINATES

POINT	NORTHING	EASTING
401		
402		
403		
404		
405		
406		
407		
408		
409		
410		
411		
412		
413		
414		
415		
416		
417		
418		
419		
420		
421		
422		
423		
424		
425		
426		
427		
428		
429		
430		
431		
432		
433		
434		
435		
436		
437		
438		
439		
440		
441		
442		
443		
444		
445		

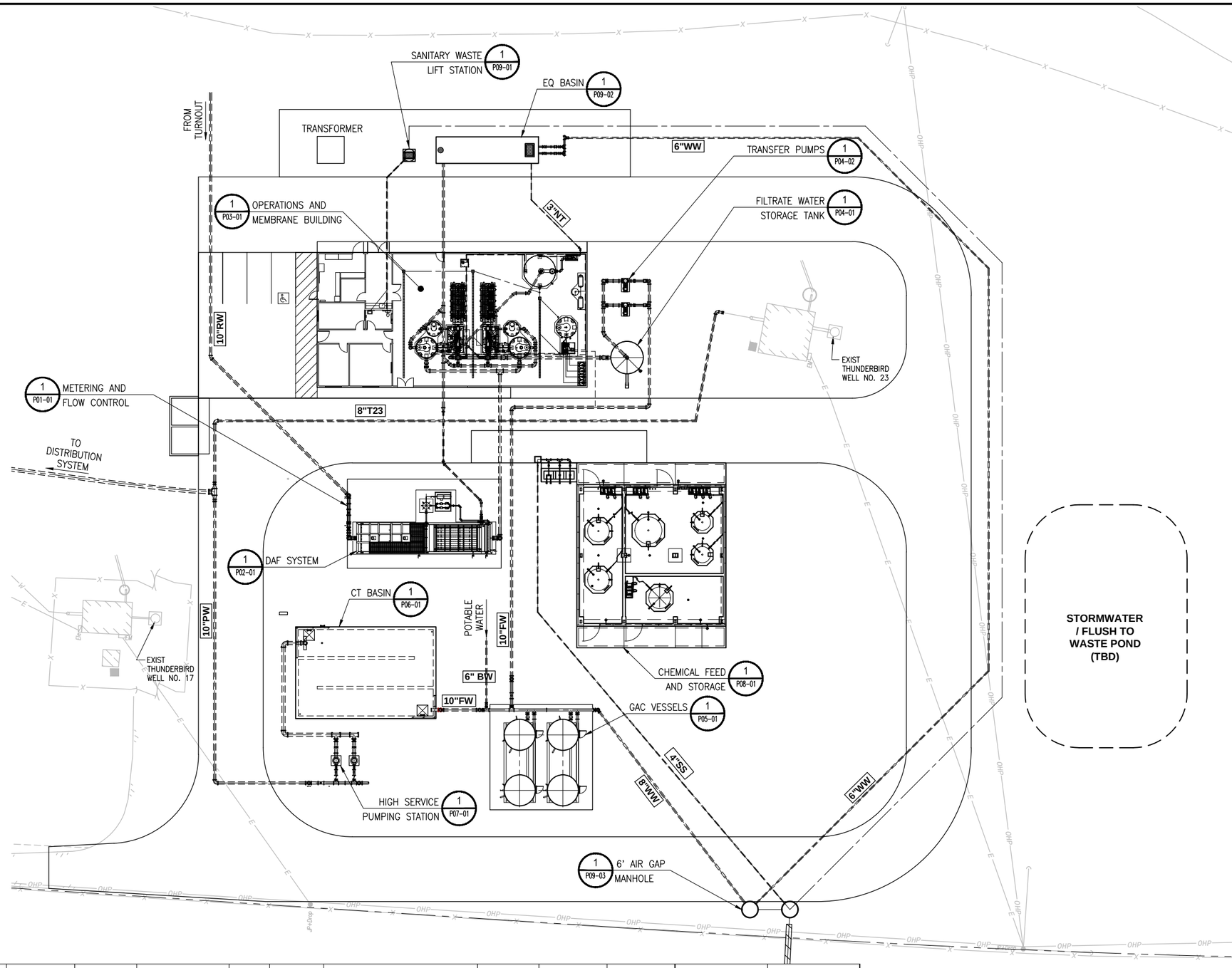

PROCESS PIPE SCHEDULE

PIPING SERVICE DESIGNATION	PIPING SERVICE DESCRIPTION	BURIED PIPING MATERIAL	ABOVE-GRADE PIPING MATERIAL	DESIGN PRESSURE (PSI)	TEST PRESSURE (PSI)	COMMENTS
AIR	AIR	CU	CU	100	125	TEST WITH AIR
D	DRAIN LINE	PVCG, DIP, WSP	DIP, WSP	< 5	-	SEE §330130
FLT	FLOAT	PVCG, DIP, WSP	DIP, WSP	< 5	-	SEE §330130
FW	FILTERED WATER	PVC, DIP, WSP	DIP, WSP	< 5	-	SEE §330130
FTW	FILTER TO WASTE WATER	PVCG, DIP, WSP	DIP, WSP	< 5	-	SEE §330130
HW	HOT WATER	CU	CU	70	125	
PW	POTABLE WATER	PVC, DIP, WSP	DIP, WSP	70	125	
RW	RAW WATER	PVC, DIP, WSP	DIP, WSP	20	50	
SD	STORM DRAIN	PVCG, DIP, RCP, WSP	-	< 5	-	SEE §330130
SL	SLUDGE	PVC, DIP, WSP	DIP, WSP	20	50	
SS	SANITARY SEWER	CISP, PVCG	-	< 5	-	SEE §330130
WW	WASHWATER	PVC, DIP, WSP	DIP, WSP	5	25	

MATERIAL DESIGNATION	DESCRIPTION	SPECIFICATION	BURIED LINING	BURIED COATING	EXPOSED LINING	EXPOSED COATING
WSP	WELDED STEEL PIPE	402001 & 402066	CEMENT MORTAR	TAPE WRAPPED	FUSION BONDED EPOXY	FUSION BONDED EPOXY
DIP	DUCTILE IRON PIPE	402040	CEMENT MORTAR	PE ENCASMENT	FUSION BONDED EPOXY	FUSION BONDED EPOXY
RCP	ASTM C76 REINFORCED CONCRETE PIPE	334216				
PVCG	ASTM D3034 & F679 GRAVITY PVC	333112				
RCP	ASTM C76 REINFORCED CONCRETE PIPE	334216				
SCH 80 PVC	SCHEDULE 80 SOLVENT WELD PVC	402090				
					CEMENT MORTAR	§099000 SYSTEM 10

SCALE 1" = 20'

PRELIMINARY 30% SUBMITTAL

0 1/2 1
IF THIS BAR DOES NOT MEASURE 1" THEN DRAWING IS NOT TO FULL SCALE

REV	DATE	DESCRIPTION	APPR

PROJECT ENGINEER | REG NUMBER | EXP DATE

AECOM
AECOM
1194 PACIFIC STREET, SUITE 204
SAN LUIS OBISPO, CA 93401
T 805.542.9840 F 805.542.9990
www.aecom.com

CITY OF EL PASO DE ROBLES
WATER TREATMENT PLANT PROJECT

YARD PROCESS PIPING PLAN

DESIGNED:
DETAILED:
CHECKED:
APPROVED:
DATE: November 2012
AECOM PROJECT NO. 60264606
P.R. PROJECT NO.
CADD STDS. AECOM

C00-06
SHEET 16 OF -

DWG: V:\PASO ROBLES\60264606-WTP\CDD CAD\PLANSET\2-CIVIL\C00-06.dwg Layout Name: 34x22 – Plotted by: Rodriguez, David Date: 11/28/2012 – 3:40 PM
XREFS: C-Y-TOPO-EX – C-Y-FEATURES-E – G-BD-PR – C-Y-BOUNDARY-E – C-LP-PR – A-FP-MEMB – S-NP-09 – D-FP-CHEM-PIPING – S-RP-06 IMAGES: CITY OF PASO LOGO_1.png

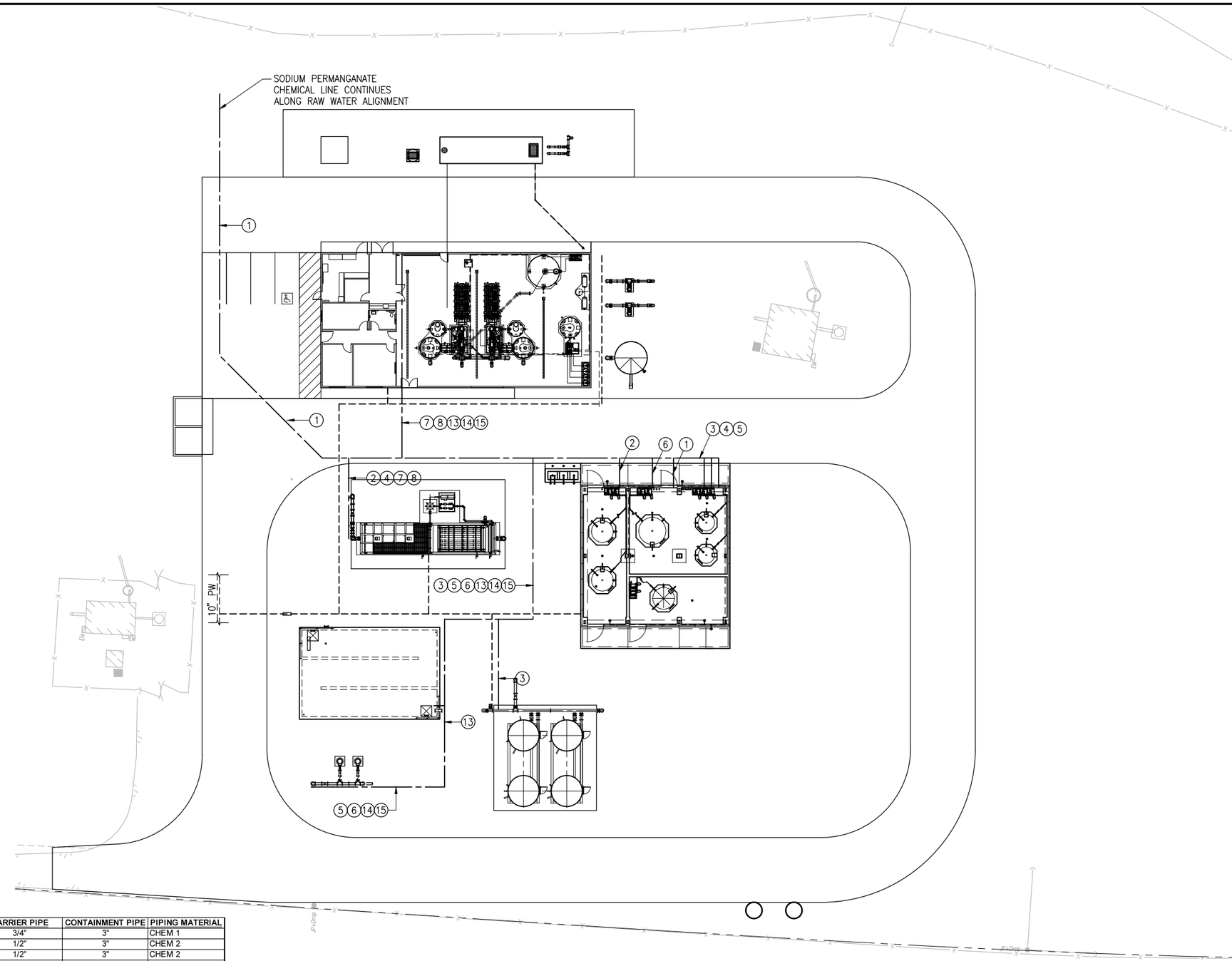

LEGEND

- - - - - - POTABLE WATER

—— - - —— CHEMICAL/SAMPLE LINES

CHEMICAL PIPING SCHEDULE

MATERIAL DESIGNATION	DESCRIPTION	SPECIFICATION
CHEM 1	DOUBLE CONTAINED CHEMICAL FEED	§402090
CHEM 2	PE TUBING INSIDE EPVC	
SCH 80 PVC	SCHEDULE 80 SOLVENT WELD PVC	§402468

CHEMICAL AND SAMPLE LINES

NO.	DESCRIPTION	LOCATION	CARRIER PIPE	CONTAINMENT PIPE	PIPING MATERIAL
1	SODIUM PERMANAGNATE	RAW WATER SCREENING STRUCTURE	3/4"	3"	CHEM 1
2	POLYALUMINUM CHLORIDE	DAF STATIC MIXER	1/2"	3"	CHEM 2
3	SODIUM HYPOCHLORITE	GAC OUTLET	1/2"	3"	CHEM 2
4	SODIUM HYPOCHLORITE	DAF INLET	1/2"	3"	CHEM 2
5	SODIUM HYPOCHLORITE	HIGH SERVICE PUMPING STATION	1/2"	3"	CHEM 2
6	SODIUM HYDROXIDE	HIGH SERVICE PUMPING STATION	1/2"	3"	CHEM 2
7	RAW WATER SAMPLE	FLOW CONTROL SECTION	1/2"	-	SCH 80 PVC
8	STREAMING CURRENT SAMPLE	DAF INLET	1/2"	-	SCH 80 PVC
9	CLARIFIED WATER SAMPLE	MEMBRANE FEED MANIFOLD	1/2"	-	SCH 80 PVC
10	TRAIN 'A' FILTER EFFLUENT SAMPLE	MFS SKID A EFFLUENT PIPING	1/2"	-	SCH 80 PVC
11	TRAIN 'B' FILTER EFFLUENT SAMPLE	MFS SKID B EFFLUENT PIPING	1/2"	-	SCH 80 PVC
12	COMBINED FILTER EFFLUENT SAMPLE	COMBINED MFS EFFLUENT MANIFOLD	1/2"	-	SCH 80 PVC
13	GAC EFFLUENT SAMPLE	CLEARWELL INLET	1/2"	-	SCH 80 PVC
14	CT COMPLIANCE SAMPLE	HIGH SERVICE PUMPING STATION	1/2"	-	SCH 80 PVC
15	FINISHED WATER SAMPLE	HIGH SERVICE PUMP STATION PIPING	1/2"	-	SCH 80 PVC

SCALE 1" = 20'

PRELIMINARY
30% SUBMITTAL

0 1/2 1
IF THIS BAR DOES NOT MEASURE 1" THEN DRAWING IS NOT TO FULL SCALE

REV	DATE	DESCRIPTION	APPR

PROJECT ENGINEER | REG NUMBER | EXP DATE

AECOM
AECOM
1194 PACIFIC STREET, SUITE 204
SAN LUIS OBISPO, CA 93401
T 805.542.9840 F 805.542.9990
www.aecom.com

CITY OF EL PASO DE ROBLES
WATER TREATMENT PLANT PROJECT

YARD CHEMICAL, SERVICE WATER AND SAMPLE PLAN

DESIGNED:
DETAILED:
CHECKED:
APPROVED:
DATE: November 2012
AECOM PROJECT NO. 60264606
P.R. PROJECT NO.
CADD STDS. AECOM

C00-07
SHEET 17 OF -

DWG: V:\PASO ROBLES\60264606-WTP\000 CAD\PLANSET\2-CIVIL\C00-07.dwg Layout Name: 34x22 - Plotted by: Rodriguez, David Date: 11/28/2012 - 3:40 PM
XREFS: C-Y-TOPO-EX - C-Y-FEATURES-E - C-BD-PR - C-Y-BOUNDARY-E - C-LP-PR - A-FP-MEMB - S-RP-06 - S-NP-09 - D-FP-CHEM-PIPING IMAGES: CITY OF PASO LOGO_1.png -

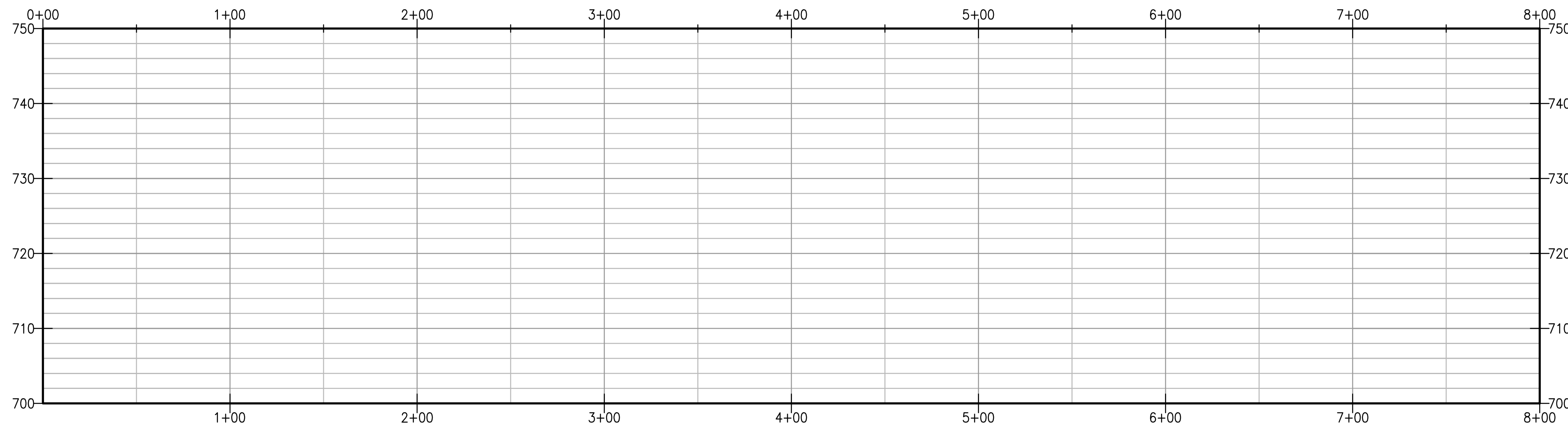

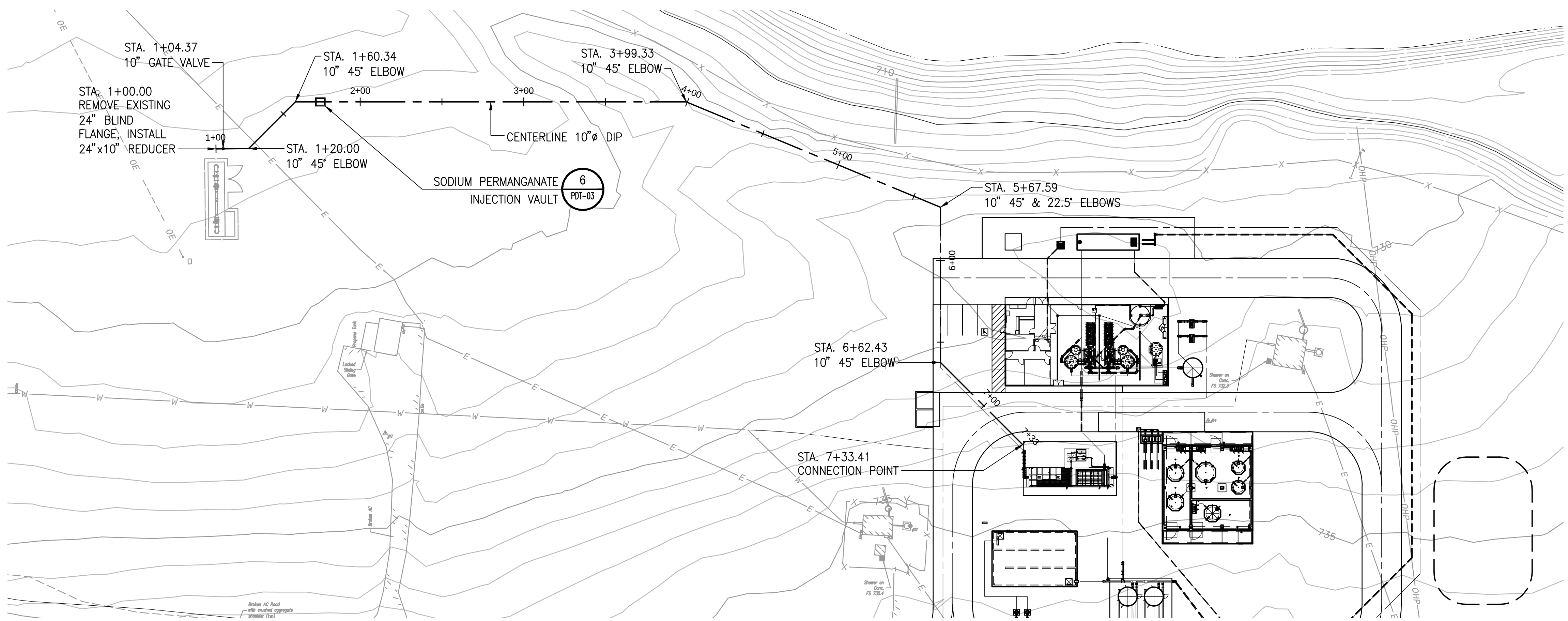

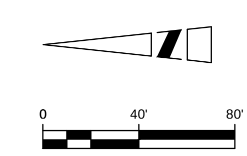

PRELIMINARY
30% SUBMITTAL

0 1/2 1
IF THIS BAR DOES NOT MEASURE 1" THEN DRAWING IS NOT TO FULL SCALE

REV	DATE	DESCRIPTION	APPR
4			
3			
2			
1			

PROJECT ENGINEER: JON HANLON
REG NUMBER
EXP DATE

AECOM
AECOM
1194 PACIFIC STREET, SUITE 204
SAN LUIS OBISPO ,CA 93401
T 805.542.9840 F 805.542.9990
www.aecom.com

CITY OF EL PASO DE ROBLES INCORPORATED 1889

CITY OF EL PASO DE ROBLES
WATER TREATMENT PLANT PROJECT

RAW WATER
PLAN AND PROFILE

DESIGNED: JHN
DETAILED: JPF
CHECKED: -
APPROVED:
DATE: November 2012
AECOM PROJECT NO. 60264606
P.R. PROJECT NO.
CADD STDS. AECOM

C00-08
SHEET
X OF -

DWG: V:\PASO ROBLES\60264606-WTP\000 CAD\PLANSET\2-CIVIL\C00-08.dwg Layout Name: 34x22 - Plotted by: Rodriguez, David Date: 11/29/2012 - 8:17 AM
XREFS: G-BD-PR - C-Y-FEATURES - C-Y-FEATURES-E - C-Y-TOPO-EX - Aerial - C-W-UTILITY-E - C-Y-BOUNDARY-E - C-LP-PR - S-RP-06 - D-FP-CHEM-PIPING - S-NP-09 - A-FP-MEMB IMAGES: CITY OF PASO LOGO_1.png -

H: 1" = 20'
V: 1" = 5'

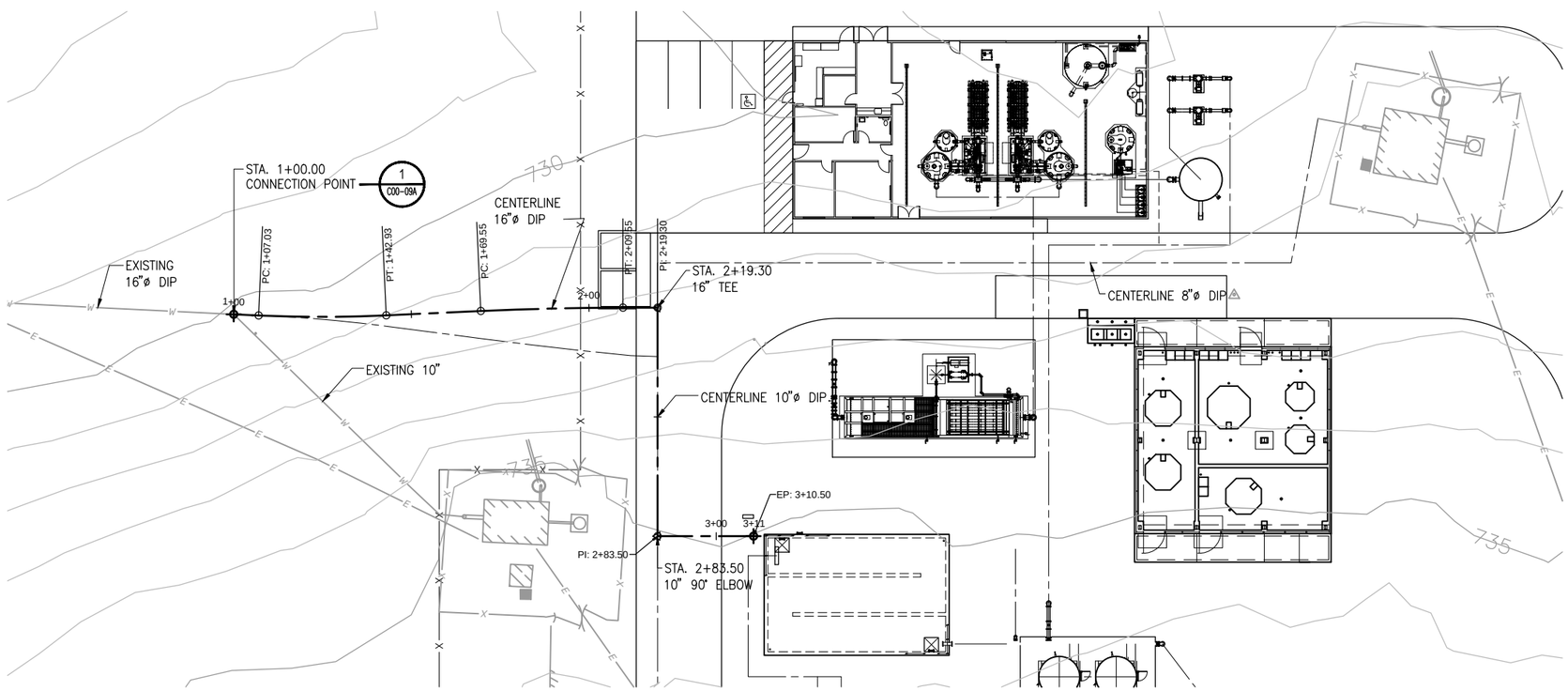

1" = 20'

PRELIMINARY
30% SUBMITTAL

IF THIS BAR DOES NOT MEASURE 1" THEN DRAWING IS NOT TO FULL SCALE

REV	DATE	DESCRIPTION	APPR
1			
2			
3			
4			

PROJECT ENGINEER: JOM HANLON
REG NUMBER
EXP DATE

AECOM
AECOM
1194 PACIFIC STREET, SUITE 204
SAN LUIS OBISPO, CA 93401
T 805.542.9840 F 805.542.9990
www.aecom.com

CITY OF EL PASO DE ROBLES
WATER TREATMENT PLANT PROJECT

FINISHED WATER
PLAN AND PROFILE

DESIGNED: JHN
DETAILED: JPF
CHECKED: -
APPROVED:
DATE: November 2012
AECOM PROJECT NO. 60264606
P.R. PROJECT NO.
CADD STDS. AECOM

C00-09
SHEET
X OF -

DWG: V:\PASO ROBLES\60264606-WTP\C00 CAD\PLANSET\2-CIVIL\C00-09.dwg Layout Name: Layout1 - Plotted by: Rodriguez, David Date: 11/28/2012 - 3:41 PM
XREFS: C-LP-PR - S-RP-06 - D-FP-CHEM-PIPING - S-NP-09 - A-FP-MEMB - C-Y-BOUNDARY-E - C-Y-FEATURES-E - C-Y-TOPO-EX - C-BD-PR IMAGES: CITY OF PASO LOGO_1.png -

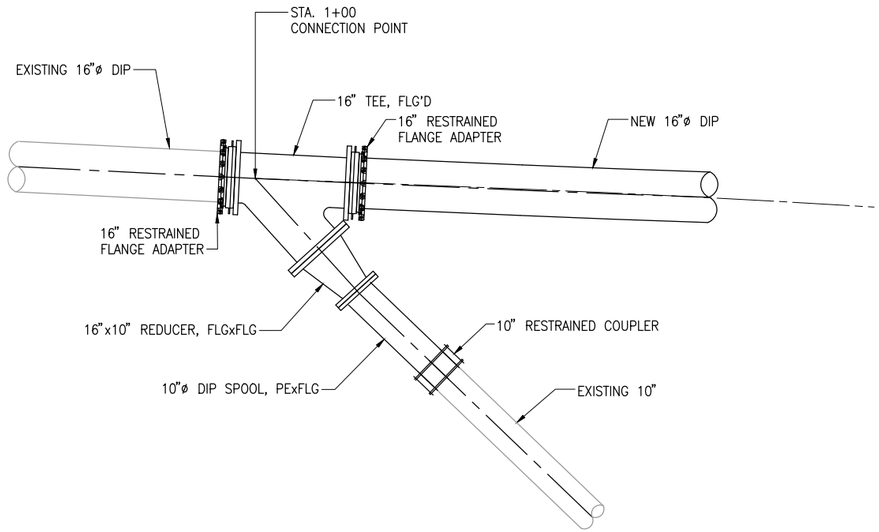

STA. 1+00 CONNECTION

1
-

SCALE: 1/2" = 1'-0"

PRELIMINARY
30% SUBMITTAL

0 1/2 1

IF THIS BAR DOES NOT MEASURE 1" THEN DRAWING IS NOT TO FULL SCALE

REV	DATE	DESCRIPTION	APPR

PROJECT ENGINEER JON HANLON
REG NUMBER
EXP DATE

AECOM
AECOM
1194 PACIFIC STREET, SUITE 204
SAN LUIS OBISPO, CA 93401
T 805.542.9840 F 805.542.9990
www.aecom.com

CITY OF EL PASO DE ROBLES
WATER TREATMENT PLANT PROJECT

FINISHED WATER DETAIL

DESIGNED: JHN
DETAILED: JPF
CHECKED: -
APPROVED:
DATE: November 2012
AECOM PROJECT NO. 60264606
P.R. PROJECT NO.
CADD STDS. AECOM

C00-09A
SHEET X OF -

DWG: V:\PASO ROBLES\60264606-WTP\000 CAD\PLANSET\2-CIVIL\C00-09A.dwg Layout Name: Layout1 - Plotted by: Rodriguez, David Date: 11/28/2012 - 3:41 PM
XREFS: C-LP-PR - S-RP-06 - D-FP-CHEM-PIPING - S-NP-09 - A-FP-MEMB - C-Y-BOUNDARY-E - C-Y-FEATURES-E - C-Y-TOPO-EX - G-BD-PR IMAGES: CITY OF PASO LOGO_1.png -

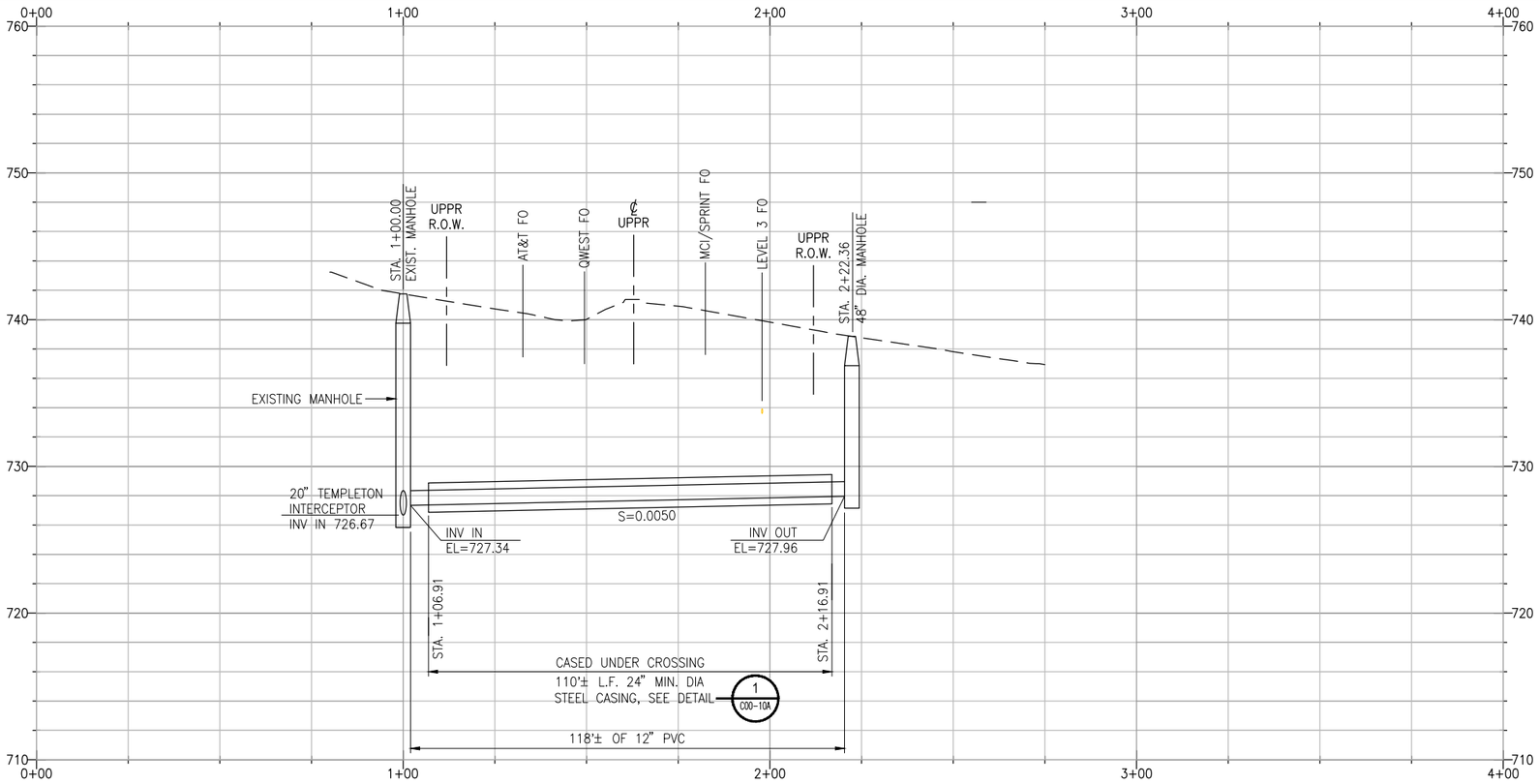

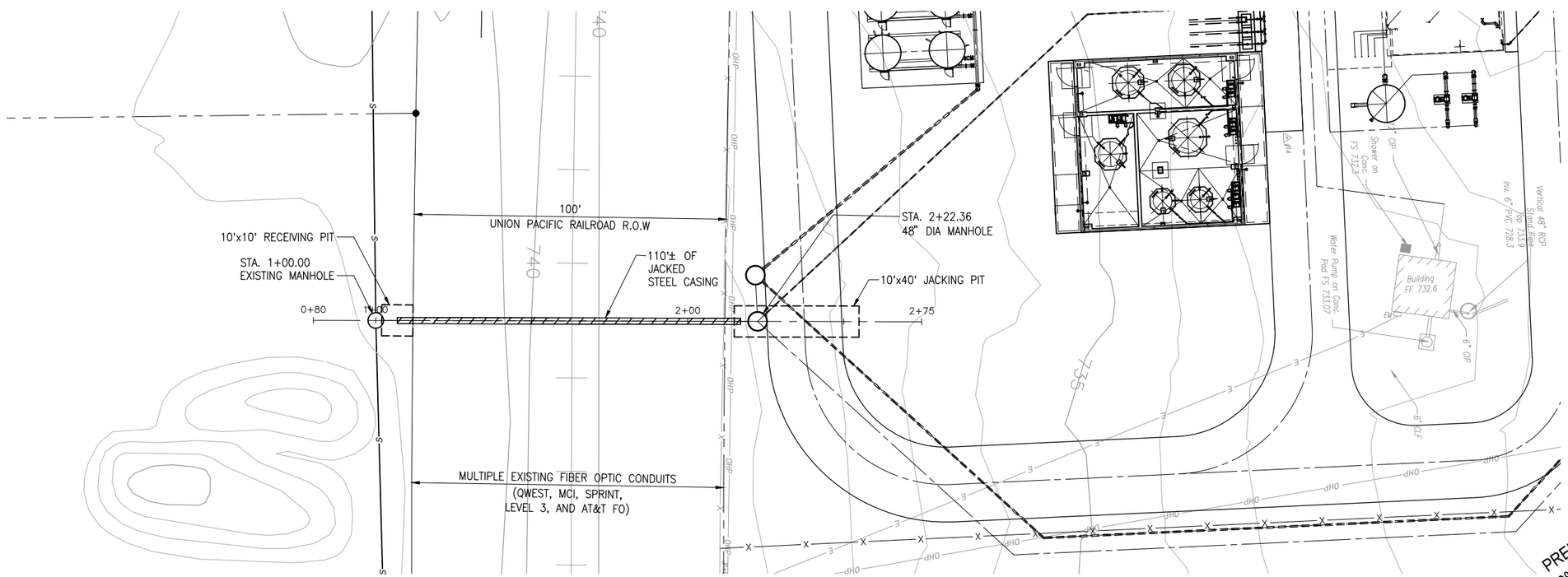

REV	DATE	DESCRIPTION	APPR

PROJECT ENGINEER
JOM HANLON
REG NUMBER
EXP DATE

AECOM
AECOM
1194 PACIFIC STREET, SUITE 204
SAN LUIS OBISPO, CA 93401
T 805.542.9840 F 805.542.9990
www.aecom.com

CITY OF EL PASO DE ROBLES
WATER TREATMENT PLANT PROJECT

U.P.R. CROSSING
PLAN AND PROFILE

DESIGNED: JHN
DETAILED: JPF
CHECKED: -
APPROVED:
DATE: November 2012
AECOM PROJECT NO.
60264606
P.R. PROJECT NO.
CADD STDS.
AECOM

C00-10
SHEET
X OF -

DWG: V:\PASO ROBLES\60264606-WTP\000 CAD\PLANSET\2-CIVIL\C00-10.dwg Layout Name: 34x22 - Plotted by: Rodriguez, David Date: 11/28/2012 - 3:42 PM
XREFS: G-BD-PR - C-Y-FEATURES - C-Y-FEATURES-E - C-Y-TOPO-EX - Aerial - C-W-UTILITY-E - C-Y-BOUNDARY-E - C-LP-PR - S-RP-06 - D-FP-CHEM-PIPING - S-NP-09 IMAGES: CITY OF PASO LOGO_1.png -

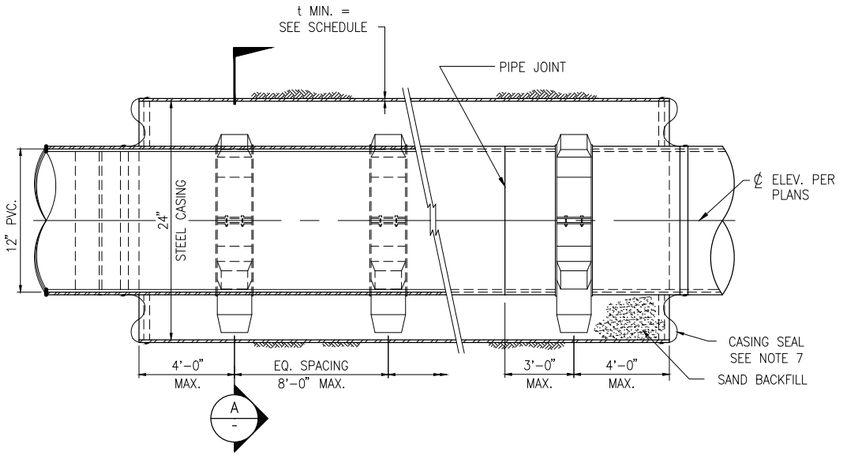

JACKED CASING DETAIL

NOT TO SCALE

1 / - C00-10

NOTES:

1. FOR LOCATIONS OF PIPE IN JACKED STEEL CASING SEE PLANS.
2. JACKED STEEL CASINGS SHALL BE IN CONFORMANCE WITH SPECIFICATION SECTION 317216 AND SHALL FOLLOW ADDITIONAL REQ'MTS. AND RECOMMENDATIONS IN GEOTECH REPORT PER THE APPLICABLE ENCROACHMENT PERMIT.
3. USE BENTONITE AS REQ'D TO REDUCE JACKING FORCE.
4. ALL CASING SECTIONS SHALL BE JOINED BY CONTINUOUS WELDING PROCESS.
5. FOR NUMBER AND SPACING OF CASING RUNNERS, SEE SPEC. SECTION 317216.
6. BACKFILL ANNULAR SPACE BETWEEN CASING AND CARRIER PIPE WITH SAND. SEE SPECIFICATIONS SECTION 312316 AND 317216.
7. EACH END OF A CASING SHALL BE FITTED WITH AN END SEAL, INSTALLED AS SHOWN AND SECURELY FASTENED WITH S.S. CLAMPS. THE END SEAL SHALL BE A MIN. 1/8" THICK NEOPRENE.

SCHEDULE – STEEL CASING FOR PIPE

LOCATION	BEGINNING STA.	ENDING STA.	MIN. CASING SIZE	MIN. WALL THICKNESS	TYPE CARRIER PIPE
UPRR CROSSING	STA. 1+06.91	STA. 2+16.91	24"	1/2"	12" PVC

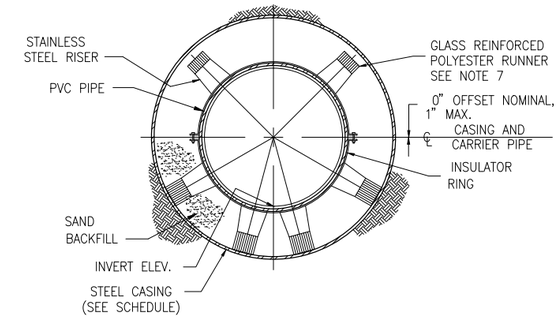

CASING SECTION

CASING SECTION

A / -

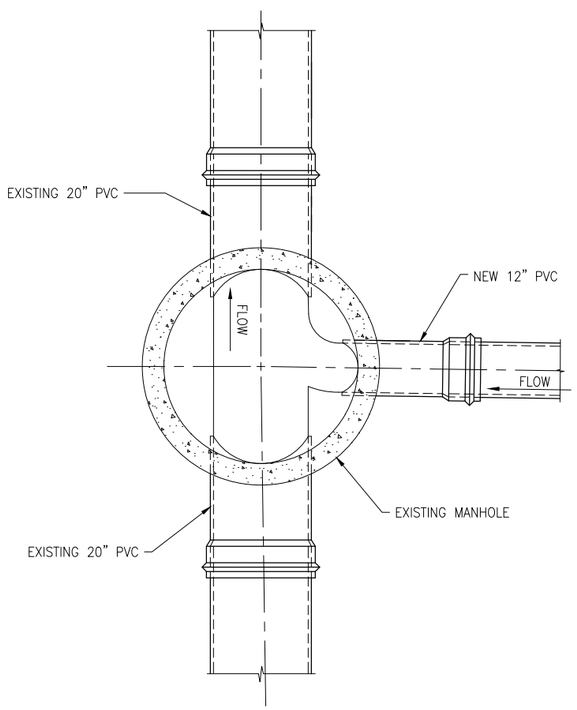

PLAN VIEW

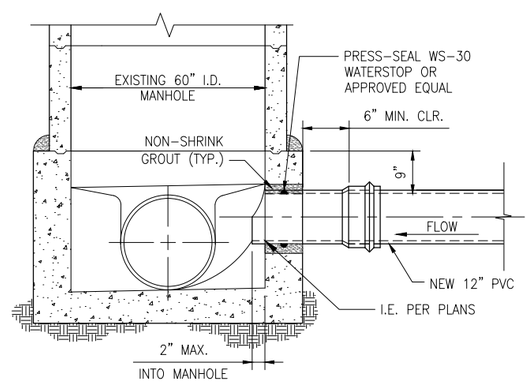

SECTION VIEW

CONNECTION AT STA. 1+00.00

NOT TO SCALE

2 / - C00-10

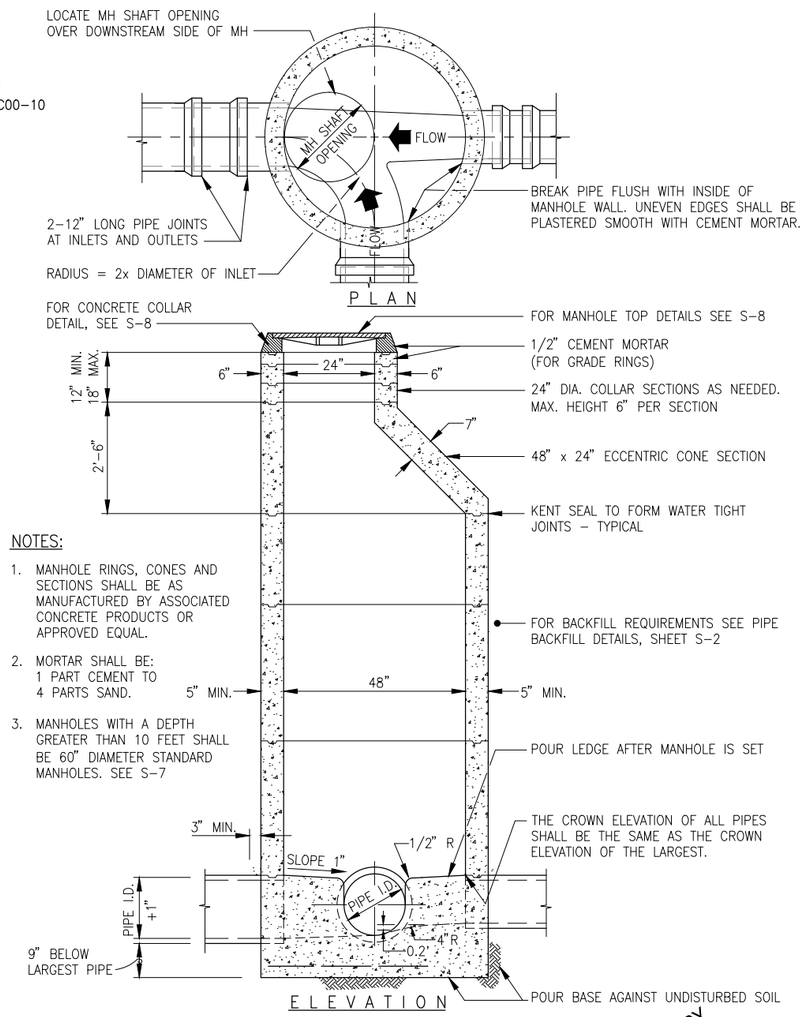

NOTES:

1. MANHOLE RINGS, CONES AND SECTIONS SHALL BE AS MANUFACTURED BY ASSOCIATED CONCRETE PRODUCTS OR APPROVED EQUAL.
2. MORTAR SHALL BE: 1 PART CEMENT TO 4 PARTS SAND.
3. MANHOLES WITH A DEPTH GREATER THAN 10 FEET SHALL BE 60" DIAMETER STANDARD MANHOLES. SEE S-7

48" SEWER MANHOLE

NOT TO SCALE

3 / - C00-10

PRELIMINARY 30% SUBMITTAL

0 1/2 1
IF THIS BAR DOES NOT MEASURE 1" THEN DRAWING IS NOT TO FULL SCALE

REV	DATE	DESCRIPTION	APPR

PROJECT ENGINEER: JON HANLON
REG NUMBER
EXP DATE

AECOM
AECOM
1194 PACIFIC STREET, SUITE 204
SAN LUIS OBISPO, CA 93401
T 805.542.9840 F 805.542.9990
www.aecom.com

CITY OF EL PASO DE ROBLES
WATER TREATMENT PLANT PROJECT

SEWER DETAILS

DESIGNED: JHN
DETAILED: JPF
CHECKED: -
APPROVED:
DATE: November 2012
AECOM PROJECT NO. 60264606
P.R. PROJECT NO.
CADD STDS. AECOM

C00-10A
SHEET X OF -

DWG: V:\PASO ROBLES\60264606-WTP\000 CAD\PLANSET\2-CIVIL\C00-10A.dwg Layout Name: 22x34 - Plotted by: Rodriguez, David Date: 11/28/2012 - 3:42 PM
XREFS: G-BD-PR IMAGES: CITY OF PASO LOGO_1.png -

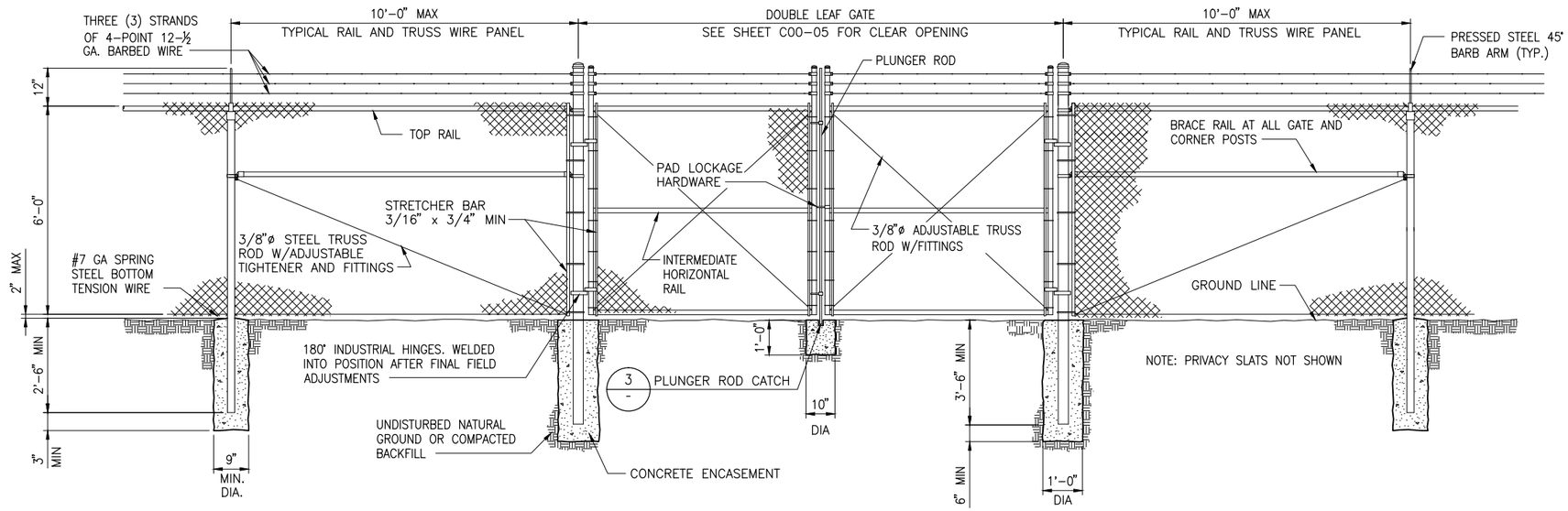

DOUBLE LEAF GATE DETAIL

NOT TO SCALE

1 / -

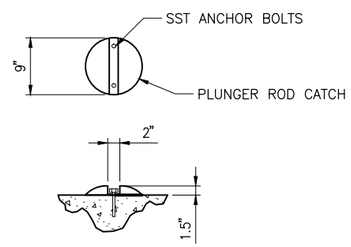

PLUNGER ROD CATCH

SCALE: NTS

3 / -

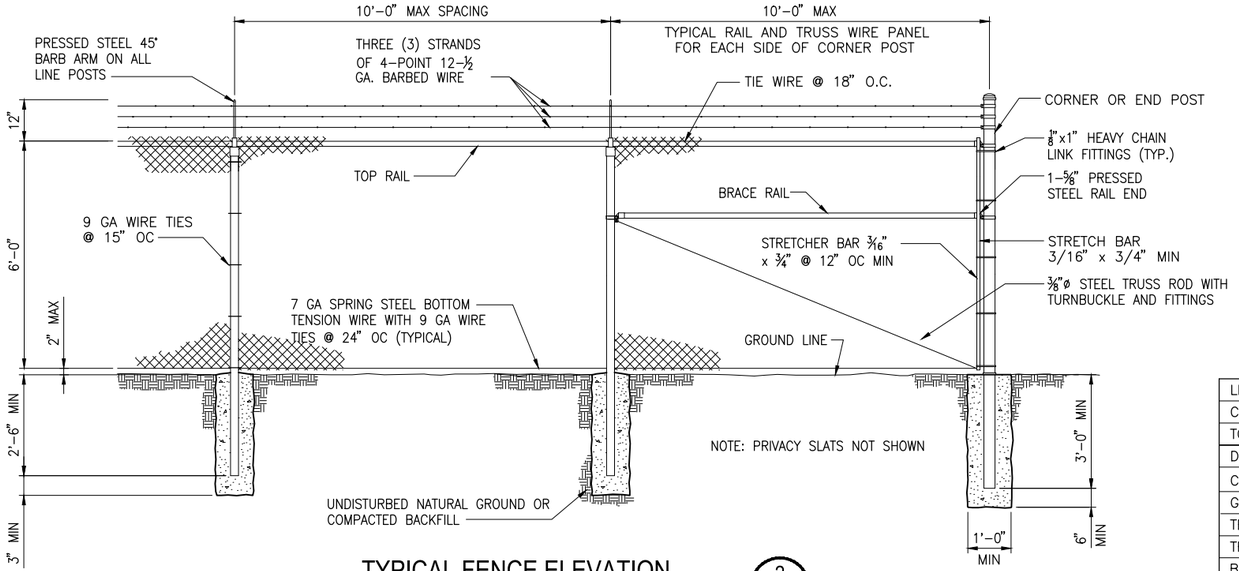

TYPICAL FENCE ELEVATION

SCALE: NTS

2 / -

POST & MATERIALS TABLE

LINE POSTS	2-3/8" OD SCH 40 PIPE
CORNER & END POSTS	2-7/8" OD SCH 40 PIPE
TOP RAIL	1-5/8" OD SCH 40 PIPE
DRIVE GATE POSTS	6-5/8" OD SCH 40 PIPE
CHAIN LINK FABRIC	9 GA WIRE 2" DIAMOND WIRE, KNUCKLED TOP & BOTTOM, WITH GREEN PRIVACY SLATS
GATE FRAMES	1-7/8" OD SCH 40 PIPE
TENSION WIRE	7 GA GALV COIL SPRING STEEL
TRUSS RODS	3/8" GALV STEEL
BRACE RAIL	1-5/8" OD SCH 40 PIPE

PRELIMINARY 30% SUBMITTAL

0 1/2 1

IF THIS BAR DOES NOT MEASURE 1" THEN DRAWING IS NOT TO FULL SCALE

REV	DATE	DESCRIPTION	APPR
1			
2			
3			
4			

PROJECT ENGINEER | REG NUMBER | EXP DATE

AECOM
AECOM
1194 PACIFIC STREET, SUITE 204
SAN LUIS OBISPO, CA 93401
T 805.542.9840 F 805.542.9990
www.aecom.com

CITY OF EL PASO DE ROBLES
WATER TREATMENT PLANT PROJECT

CHAIN LINK FENCE DETAILS

DESIGNED: JJR
DETAILED: JPF
CHECKED:
APPROVED:
DATE: November 2012
AECOM PROJECT NO. 60264606
P.R. PROJECT NO.
CADD STDS. AECOM

C00-11
SHEET
. OF -

DWG: V:\PASO ROBLES\60264606-WTP\000 CAD\PLANSET\2-CIVIL\C00-11.dwg Layout Name: C00-11 - Plotted by: Rodriguez, David Date: 11/28/2012 - 3:42 PM
XREFS: G-BD-PR IMAGES: CITY OF PASO LOGO_1.png -

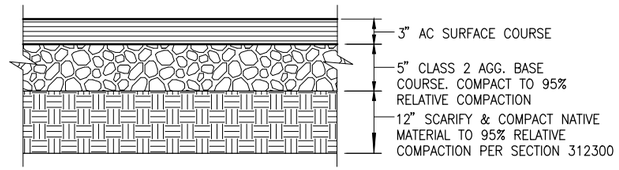

ASPHALT PAVEMENT SECTION (1 / -)

NOT TO SCALE

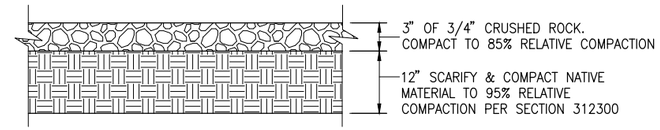

CRUSHED ROCK SURFACING SECTION (2 / -)

NOT TO SCALE

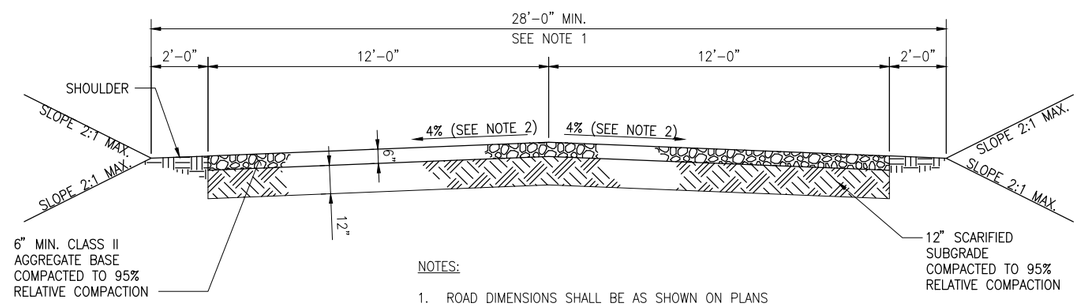

NOTES:

1. ROAD DIMENSIONS SHALL BE AS SHOWN ON PLANS
2. ALL GRADING TO FOLLOW ELEVATIONS SET BY CONTOURS SHOWN ON PLANS. ROAD SHALL BE CROWNED AS INDICATED UNLESS OTHERWISE NOTED ON PLANS.

TYPICAL GRAVEL ROAD CROSS SECTION (3 / -)

NOT TO SCALE

PRELIMINARY
30% SUBMITTAL

0 1/2 1
IF THIS BAR DOES NOT MEASURE 1" THEN DRAWING IS NOT TO FULL SCALE

REV	DATE	DESCRIPTION	APPR

PROJECT ENGINEER | REG NUMBER | EXP DATE

AECOM
AECOM
1194 PACIFIC STREET, SUITE 204
SAN LUIS OBISPO, CA 93401
T 805.542.9840 F 805.542.9990
www.aecom.com

CITY OF EL PASO DE ROBLES
WATER TREATMENT PLANT PROJECT

ROAD AND PAVING SECTIONS

DESIGNED: JJR
DETAILED: JPF
CHECKED:
APPROVED:
DATE: November 2012
AECOM PROJECT NO. 60264606
P.R. PROJECT NO.
CADD STDS. AECOM

C00-12
SHEET . OF -

DWG: V:\PASO ROBLES\60264606-WTP\000 CAD\PLANSET\2-CIVIL\C00-12.dwg Layout Name: 34x22 - Plotted by: Rodriguez, David Date: 11/28/2012 - 3:42 PM
XREFS: G-BD-PR IMAGES: CITY OF PASO LOGO_1.png -

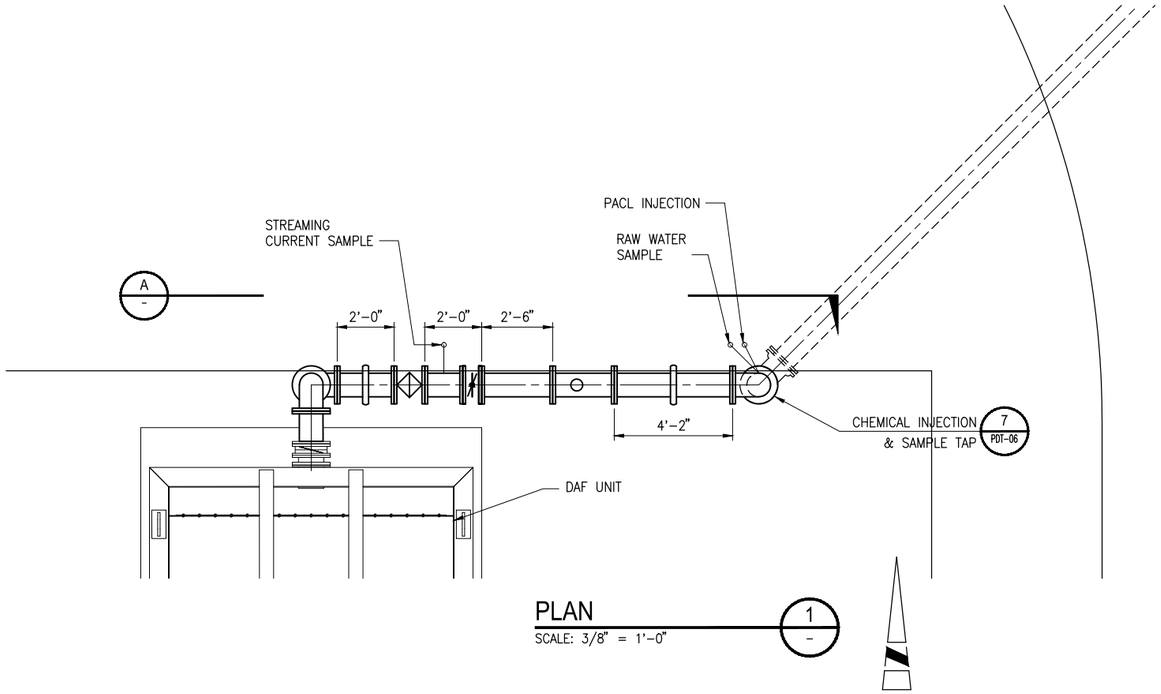

PLAN

SCALE: 3/8" = 1'-0"

1
-

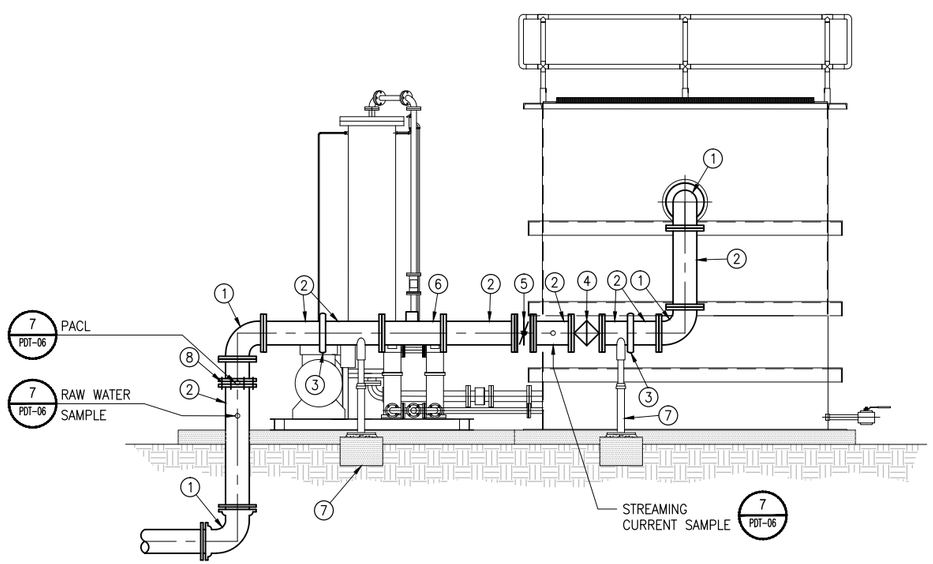

SECTION

SCALE: 3/8" = 1'-0"

A
-

MATERIALS LIST

1. 10" 90° ELBOW
2. 10" SPOOL PIECE
3. 10" GROOVED END COUPLING
4. 10" MOTORIZED , ECCENTRIC PLUG VALVE, TYPE 510
5. 10" BUTTERFLY VALVE, TYPE 200
6. 10" McCROMETER, MODEL ML-04, OR EQUAL
7. PIPE SUPPORT (1 / PDT-04)
8. STATIC MIXER

PRELIMINARY
30% SUBMITTAL

0 1/2 1

IF THIS BAR DOES NOT MEASURE 1" THEN DRAWING IS NOT TO FULL SCALE

REV	DATE	DESCRIPTION	APPR
1			
2			
3			
4			

PROJECT ENGINEER | REG NUMBER | EXP DATE

AECOM
AECOM
1194 PACIFIC STREET, SUITE 204
SAN LUIS OBISPO, CA 93401
T 805.542.9840 F 805.542.9990
www.aecom.com

CITY OF EL PASO DE ROBLES
WATER TREATMENT PLANT PROJECT

METERING & FLOW CONTROL DETAILS

DESIGNED:
DETAILED:
CHECKED:
APPROVED:
DATE: November 2012
AECOM PROJECT NO. 60264606
P.R. PROJECT NO.
CADD STDS. AECOM

P01-01
SHEET
- OF -

DWG: V:\PASO ROBLES\60264606-WTP\000 CAD\PLANSET\3-PROCESS\P01-01.dwg Layout Name: Layout1 - Plotted by: Rodriguez, David Date: 11/28/2012 - 3:46 PM
XREFS: G-BD-PR - C-LP-PR - S-RP-06 - D-FP-CHEM-PIPING - S-NP-09 IMAGES: CITY OF PASO LOGO_1.png -

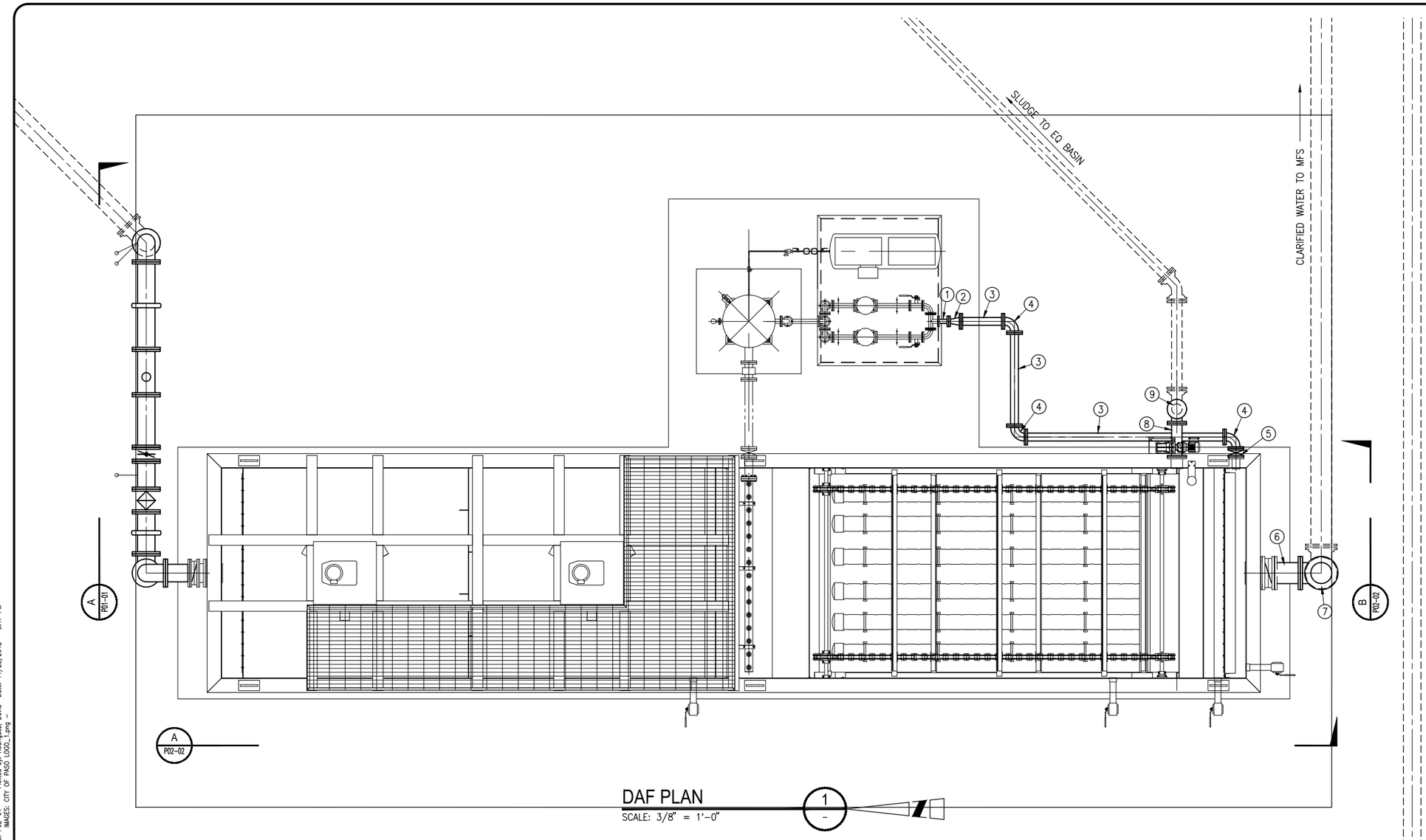

MATERIALS LIST

1. 2" SPOOL PIECE
2. 4"x 2" REDUCER
3. 4" SPOOL PIECE
4. 4" 90° ELBOW
5. 4" BUTTERFLY VALVE, TYPE 200
6. 12" SPOOL PIECE
7. 12 TEE W/BLIND FLANGE
8. 6" SPOOL PIECE
9. 6" TEE W/BLIND FLANGE

DAF PLAN

SCALE: 3/8" = 1'-0"

1
-

REV	DATE	DESCRIPTION	APPR
4			
3			
2			
1			

PROJECT ENGINEER | REG NUMBER | EXP DATE

AECOM

AECOM
1194 PACIFIC STREET, SUITE 204
SAN LUIS OBISPO, CA 93401
T 805.542.9840 F 805.542.9990
www.aecom.com

CITY OF EL PASO DE ROBLES
INCORPORATED 1889

CITY OF EL PASO DE ROBLES
WATER TREATMENT PLANT PROJECT

DAF PLAN

DESIGNED:
DETAILED:
CHECKED:
APPROVED:
DATE: November 2012
AECOM PROJECT NO. 60264606
P.R. PROJECT NO.
CADD STDS. AECOM

P02-01
SHEET
- OF -

PRELIMINARY
30% SUBMITTAL

0 1/2 1
IF THIS BAR DOES NOT MEASURE 1" THEN DRAWING IS NOT TO FULL SCALE

DWG: V:\PASO ROBLES\60264606-WTP\000 CAD\PLANSET\3-PROCESS\P02-01.dwg Layout Name: P02-01 - Plotted by: Rodriguez, David Date: 11/28/2012 - 3:47 PM
XREFS: G-BD-PR - C-LP-PR - S-RP-06 - D-FP-CHEM-PIPING - S-NP-09 - A-FP-MEMB IMAGES: CITY OF PASO LOGO_1.png -

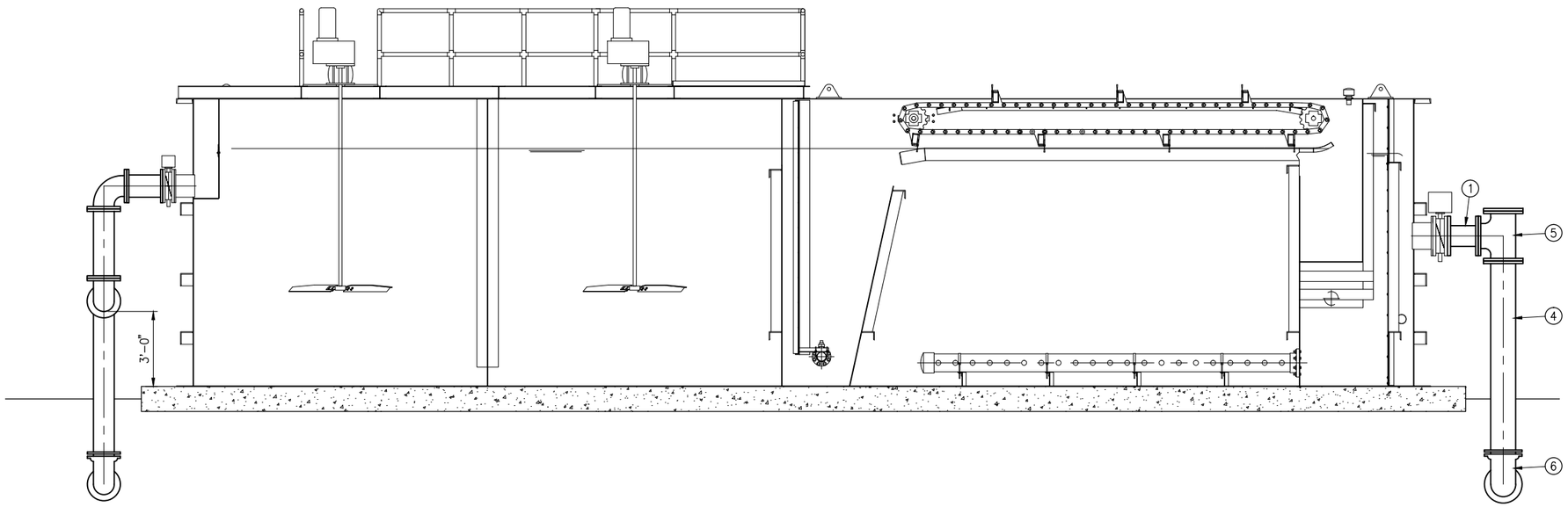

SECTION A
SCALE: 3/8" = 1'-0"

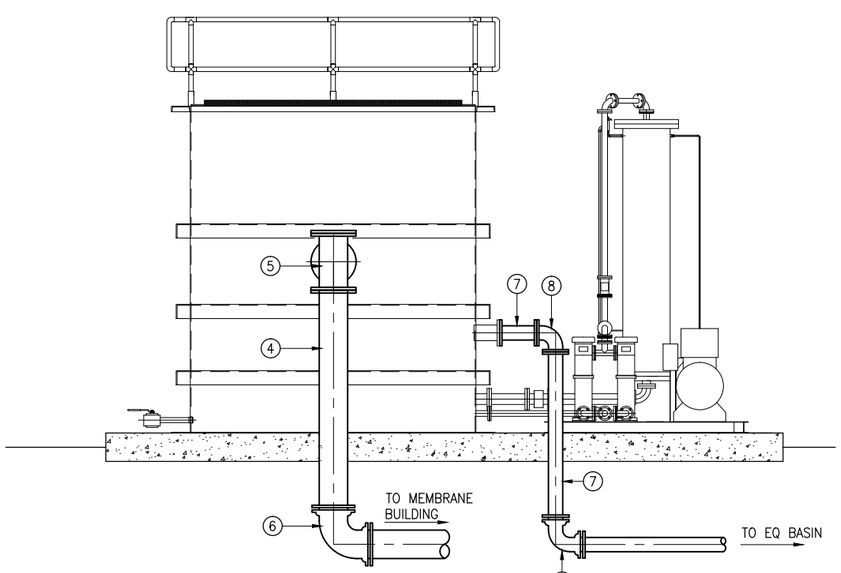

SECTION B
SCALE: 3/8" = 1'-0"

MATERIALS LIST

1. 10" SPOOL PIECE
2. 10" TEE
3. 10" 90° ELBOW
4. 12" SPOOL PIECE
5. 12" TEE
6. 12" 90° ELBOW
7. 6" SPOOL PIECE
8. 6" 90° ELBOW

PRELIMINARY 30% SUBMITTAL

0 1/2 1
IF THIS BAR DOES NOT MEASURE 1" THEN DRAWING IS NOT TO FULL SCALE

REV	DATE	DESCRIPTION	APPR

PROJECT ENGINEER | REG NUMBER | EXP DATE

AECOM
AECOM
1194 PACIFIC STREET, SUITE 204
SAN LUIS OBISPO, CA 93401
T 805.542.9840 F 805.542.9990
www.aecom.com

CITY OF EL PASO DE ROBLES
WATER TREATMENT PLANT PROJECT

DAF SECTIONS & DETAILS

DESIGNED:
DETAILED:
CHECKED:
APPROVED:
DATE: November 2012
AECOM PROJECT NO. 60264606
P.R. PROJECT NO.
CADD STDS. AECOM

P02-02
SHEET
- OF -

DWG: V:\PASO ROBLES\60264606-WTP\000 CAD\PLANSET\3-PROCESS\P02-02.dwg Layout Name: Layout1 - Plotted by: Rodriguez, David Date: 11/28/2012 - 3:47 PM
XREFS: G-BD-PR IMAGES: CITY OF PASO LOGO_1.png -

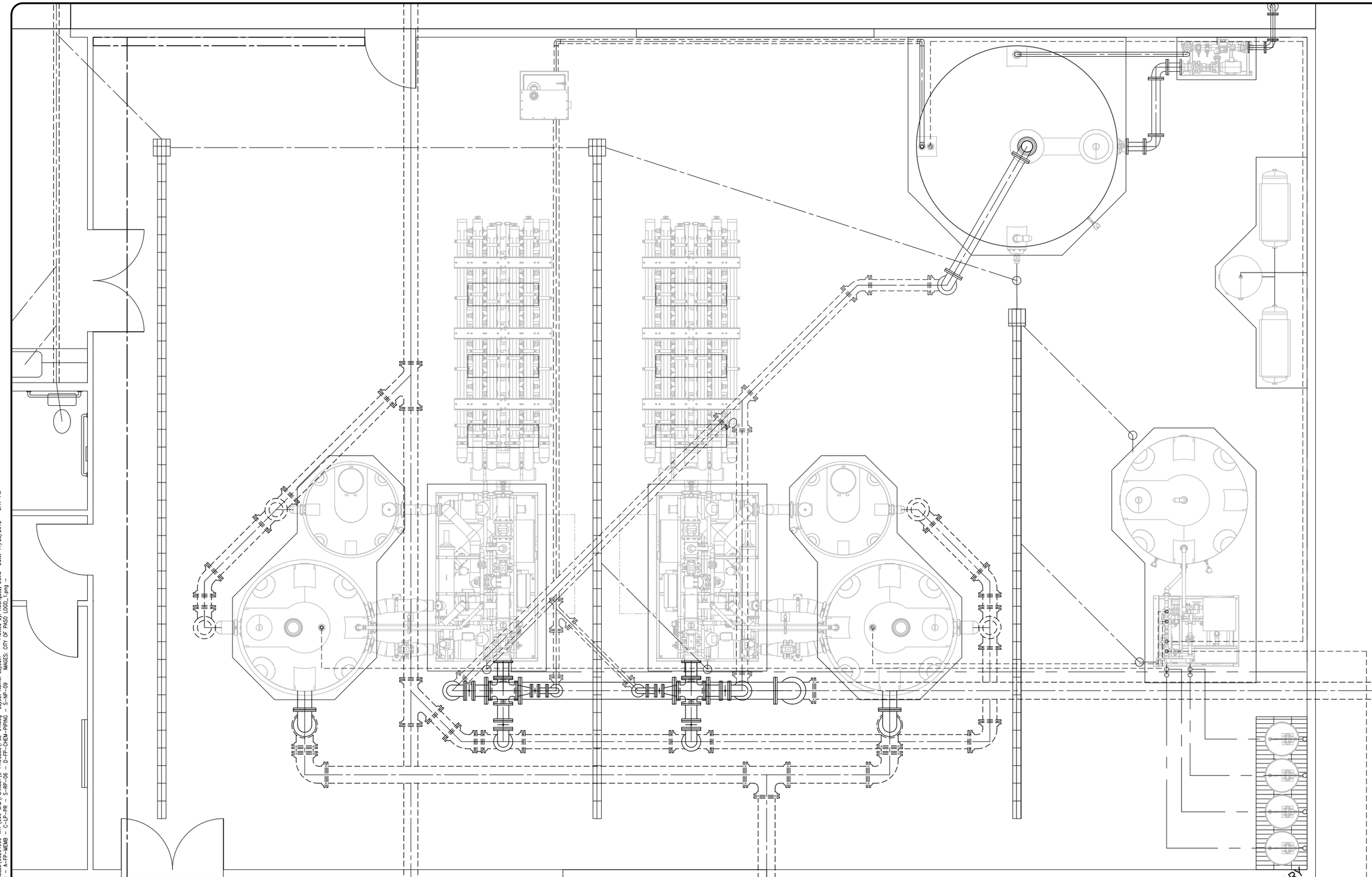

MEMBRANE PLAN

SCALE: 3/8" = 1'-0"

1
-

PRELIMINARY
30% SUBMITTAL

0 1/2 1
IF THIS BAR DOES NOT MEASURE 1" THEN DRAWING IS NOT TO FULL SCALE

REV	DATE	DESCRIPTION	APPR

PROJECT ENGINEER | REG NUMBER | EXP DATE

AECOM
AECOM
1194 PACIFIC STREET, SUITE 204
SAN LUIS OBISPO, CA 93401
T 805.542.9840 F 805.542.9990
www.aecom.com

CITY OF EL PASO DE ROBLES
WATER TREATMENT PLANT PROJECT

MEMBRANE PLAN

DESIGNED:
DETAILED:
CHECKED:
APPROVED:
DATE: November 2012

AECOM PROJECT NO.
60264606

P.R. PROJECT NO.

CADD STDS.
AECOM

P03-01
SHEET
- OF -

DWG: V:\PASO ROBLES\60264606-WTP\000 CAD\PLANSET\3-PROCESS\P03-01.dwg Layout Name: Layout1 - Plotted by: Rodriguez, David Date: 11/28/2012 - 3:47 PM
XREFS: G-BD-PR - A-FP-MEMB - C-LP-PR - S-RP-06 - D-FP-CHEM-PIPING - S-NP-09 IMAGES: CITY OF PASO LOGO_1.png -

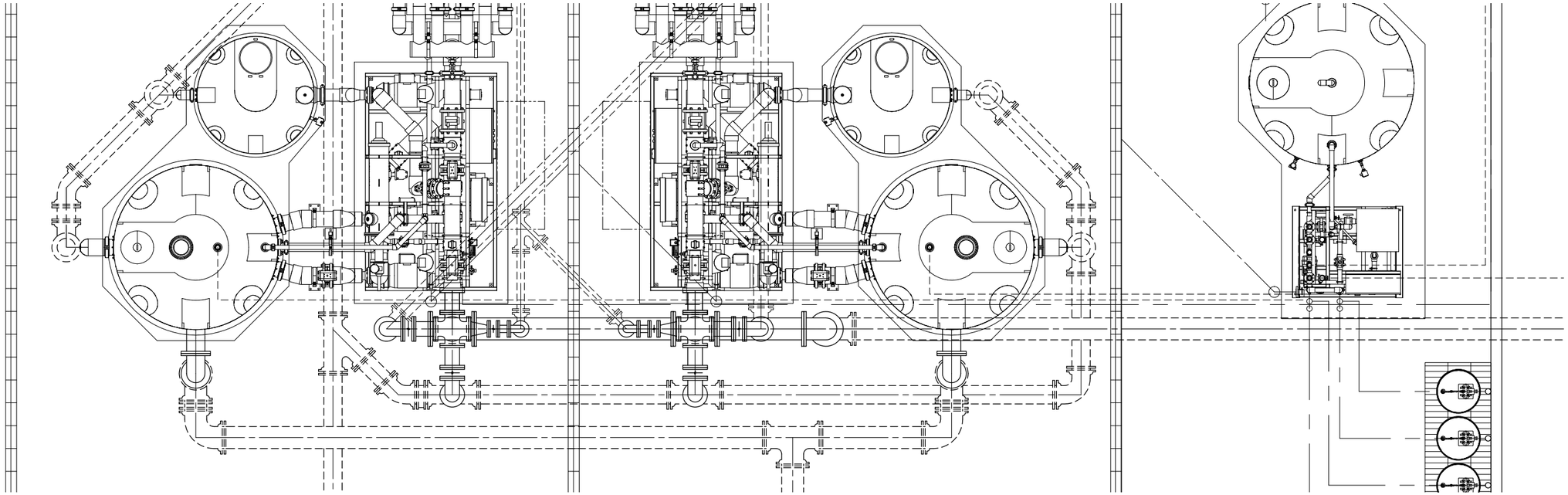

PLAN 1
SCALE: 3/8" = 1'-0"

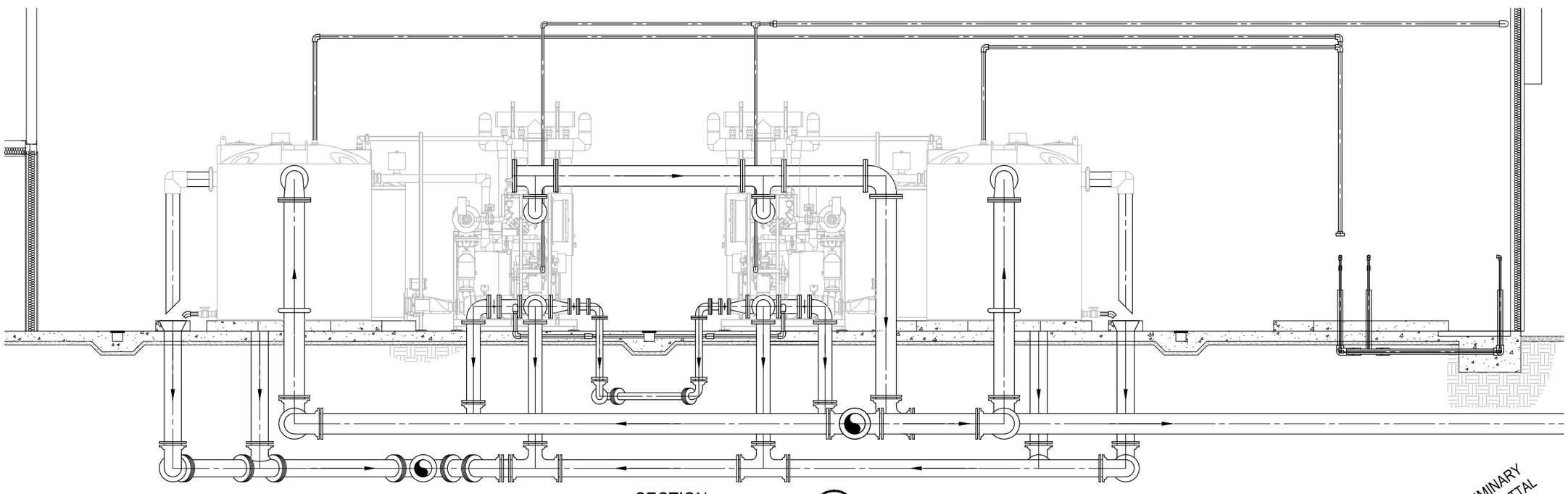

SECTION A
SCALE: 3/8" = 1'-0"

PRELIMINARY
30% SUBMITTAL

0 1/2 1
IF THIS BAR DOES NOT MEASURE 1" THEN DRAWING IS NOT TO FULL SCALE

REV	DATE	DESCRIPTION	APPR

PROJECT ENGINEER | REG NUMBER | EXP DATE

AECOM
AECOM
1194 PACIFIC STREET, SUITE 204
SAN LUIS OBISPO, CA 93401
T 805.542.9840 F 805.542.9990
www.aecom.com

CITY OF EL PASO DE ROBLES
WATER TREATMENT PLANT PROJECT

MEMBRANE SECTIONS

DESIGNED:
DETAILED:
CHECKED:
APPROVED:
DATE: November 2012
AECOM PROJECT NO. 60264606
P.R. PROJECT NO.
CADD STDS. AECOM

P03-02
SHEET
- OF -

DWG: V:\PASO ROBLES\60264606-WTP\000 CAD\PLANSET\3-PROCESS\P03-02.dwg Layout Name: Layout1 – Plotted by: Rodriguez, David Date: 11/28/2012 – 3:48 PM
XREFS: G-BD-PR – A-FP-MEMB – C-LP-PR – D-FP-CHEM-PIPING – S-NP-09 – S-NP-06 IMAGES: CITY OF PASO LOGO_1.png –

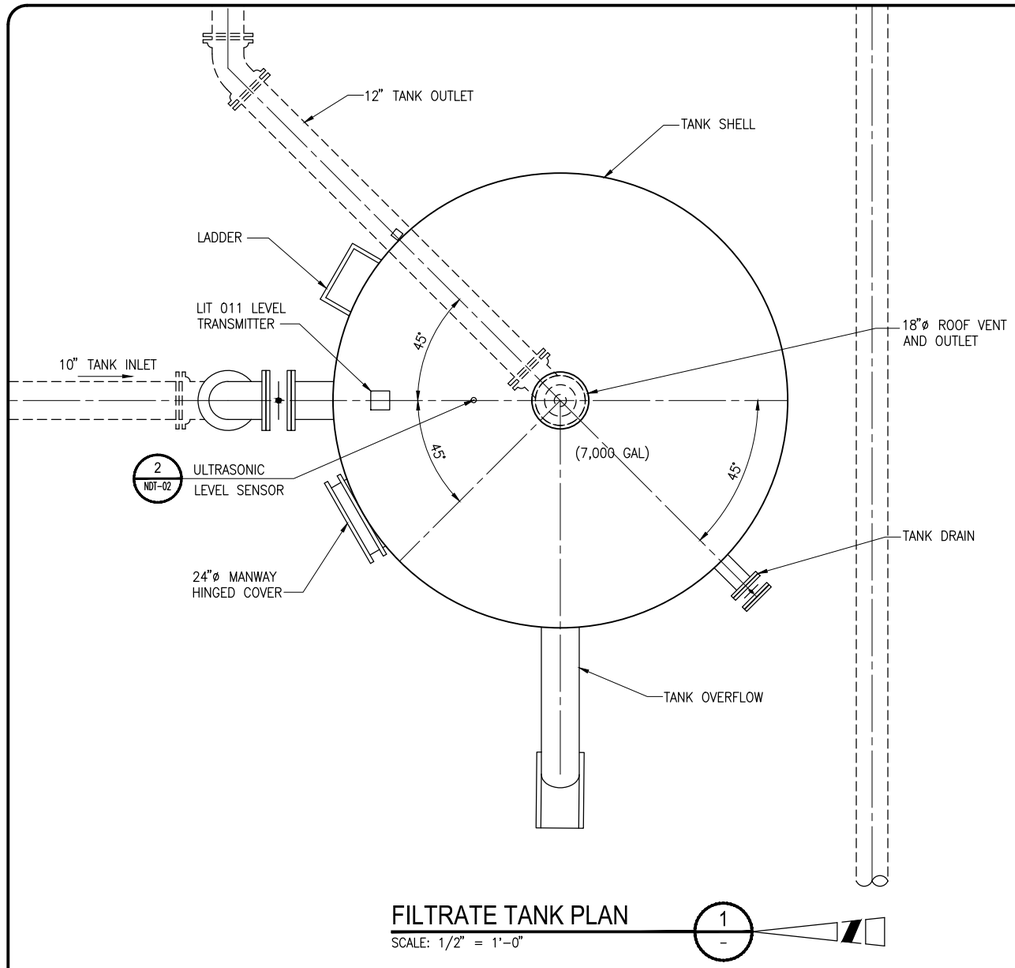

FILTRATE TANK PLAN (1 / -)

SCALE: 1/2" = 1'-0"

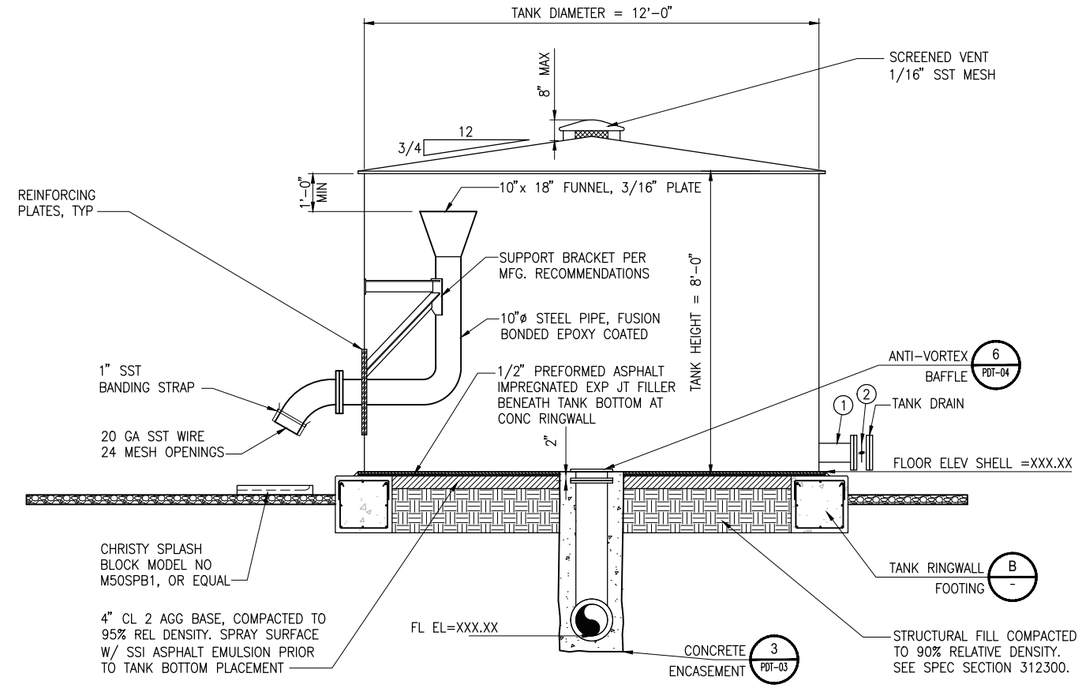

FILTRATE TANK ELEVATION (2 / -)

SCALE: 1/2" = 1'-0"

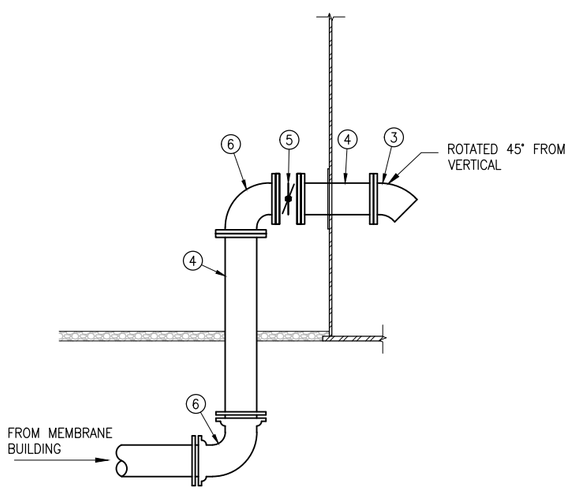

INLET DETAIL (3 / -)

SCALE: 3/8" = 1'-0"

MATERIALS LIST

1. 6" SPOOL PIECE
2. 6" BUTTERFLY VALVE, TYPE 200
3. 10" 45° ELBOW
4. 10" SPOOL PIECE
5. 10" BUTTERFLY VALVE, TYPE 200
6. 10" 90° ELBOW

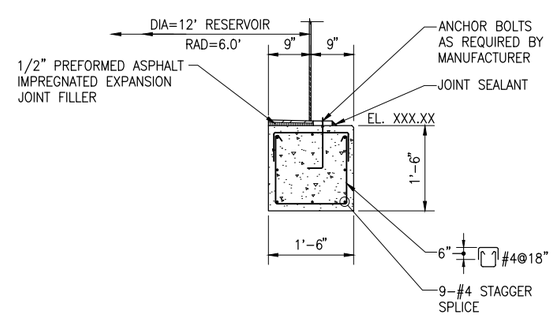

TANK RINGWALL (4 / -)

SCALE: 1/2" = 1'-0"

PRELIMINARY 30% SUBMITTAL

0 1/2 1

IF THIS BAR DOES NOT MEASURE 1" THEN DRAWING IS NOT TO FULL SCALE

REV	DATE	DESCRIPTION	APPR

PROJECT ENGINEER | REG NUMBER | EXP DATE

AECOM
AECOM
1194 PACIFIC STREET, SUITE 204
SAN LUIS OBISPO, CA 93401
T 805.542.9840 F 805.542.9990
www.aecom.com

CITY OF EL PASO DE ROBLES
WATER TREATMENT PLANT PROJECT

FILTRATE TANK PLAN

DESIGNED:
DETAILED:
CHECKED:
APPROVED:
DATE: November 2012
AECOM PROJECT NO. 60264606
P.R. PROJECT NO.
CADD STDS. AECOM

P04-01
SHEET - OF -

DWG: V:\PASO ROBLES\60264606-WTP\000 CAD\PLANSET\3-PROCESS\P04-01.dwg Layout Name: 22x34 - Plotted by: Rodriguez, David Date: 11/28/2012 - 3:48 PM
XREFS: G-BD-PR - C-LP-PR - A-FP-MEMB - S-RP-06 - D-FP-CHEM-PIPING - S-NP-09 IMAGES: CITY OF PASO LOGO_1.png -

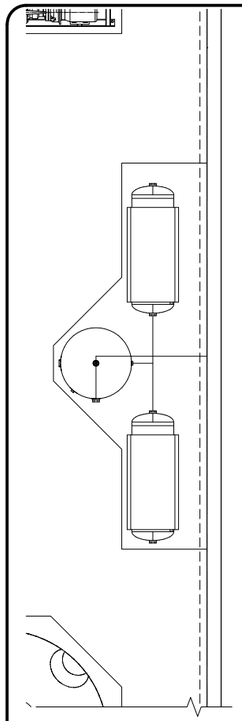

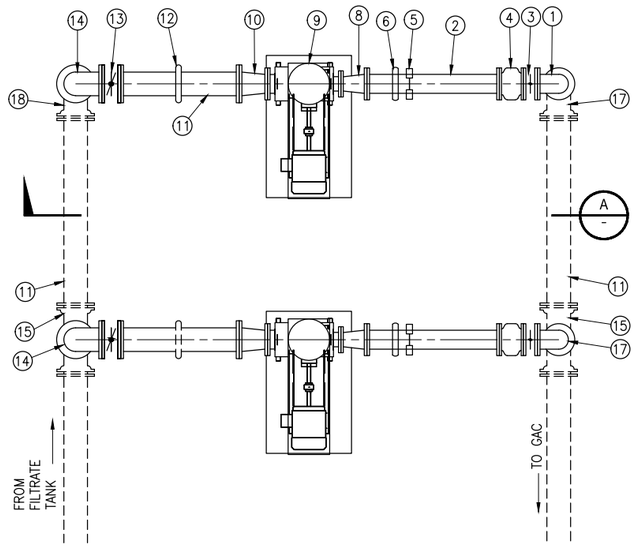

PLAN

SCALE: 3/8" = 1'-0"

1 -

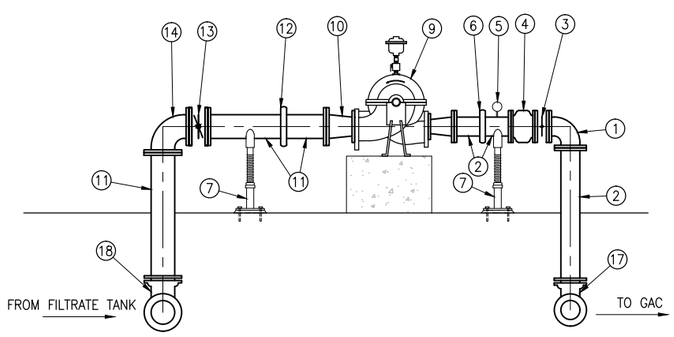

SECTION

SCALE: 3/8" = 1'-0"

A -

MATERIALS LIST

1. 8" 90° ELBOW
2. 8" SPOOL PIECE
3. 8" BUTTERFLY VALVE, TYPE 200
4. 8" CHECK VALVE, TYPE 790
5. TYPE 3 PRESSURE GAUGE/PRESSURE SWITCH (5 / PDT-06)
6. 8" GROOVED END COUPLING
7. PIPE SUPPORT (1 / PDT-04)
8. 8" x 6 "ECCENTRIC REDUCER
9. SPLIT CASE PUMP, SEE SECTION 432111
10. 10" x 8 "ECCENTRIC REDUCER
11. 10" SPOOL PIECE
12. 10" GROOVED END COUPLING
13. 10" BUTTERFLY VALVE, TYPE 200
14. 10" 90° ELBOW
15. 10" TEE
16. 12 'TEE
17. 8" x 10" 90° ELBOW
18. 10" x 12" 90° ELBOW

REV	DATE	DESCRIPTION	APPR

PROJECT ENGINEER | REG NUMBER | EXP DATE

AECOM
AECOM
1194 PACIFIC STREET, SUITE 204
SAN LUIS OBISPO, CA 93401
T 805.542.9840 F 805.542.9990
www.aecom.com

CITY OF EL PASO DE ROBLES
WATER TREATMENT PLANT PROJECT

BOOSTER PUMP STATION PLAN AND SECTIONS

DESIGNED:
DETAILED:
CHECKED:
APPROVED:
DATE: November 2012
AECOM PROJECT NO. 60264606
P.R. PROJECT NO.
CADD STDS. AECOM

P04-02
SHEET
- OF -

PRELIMINARY
30% SUBMITTAL

0 1/2 1
IF THIS BAR DOES NOT MEASURE 1" THEN DRAWING IS NOT TO FULL SCALE

DWG: V:\PASO ROBLES\60264606-WTP\000 CAD\PLANSET\3-PROCESS\P04-02.dwg Layout Name: 22x34 - Plotted by: Rodriguez, David Date: 11/28/2012 - 3:48 PM
XREFS: G-BD-PR - C-LP-PR - A-FP-MEMB - S-RP-06 - D-FP-CHEM-PIPING - S-NP-09 IMAGES: CITY OF PASO LOGO_1.png -

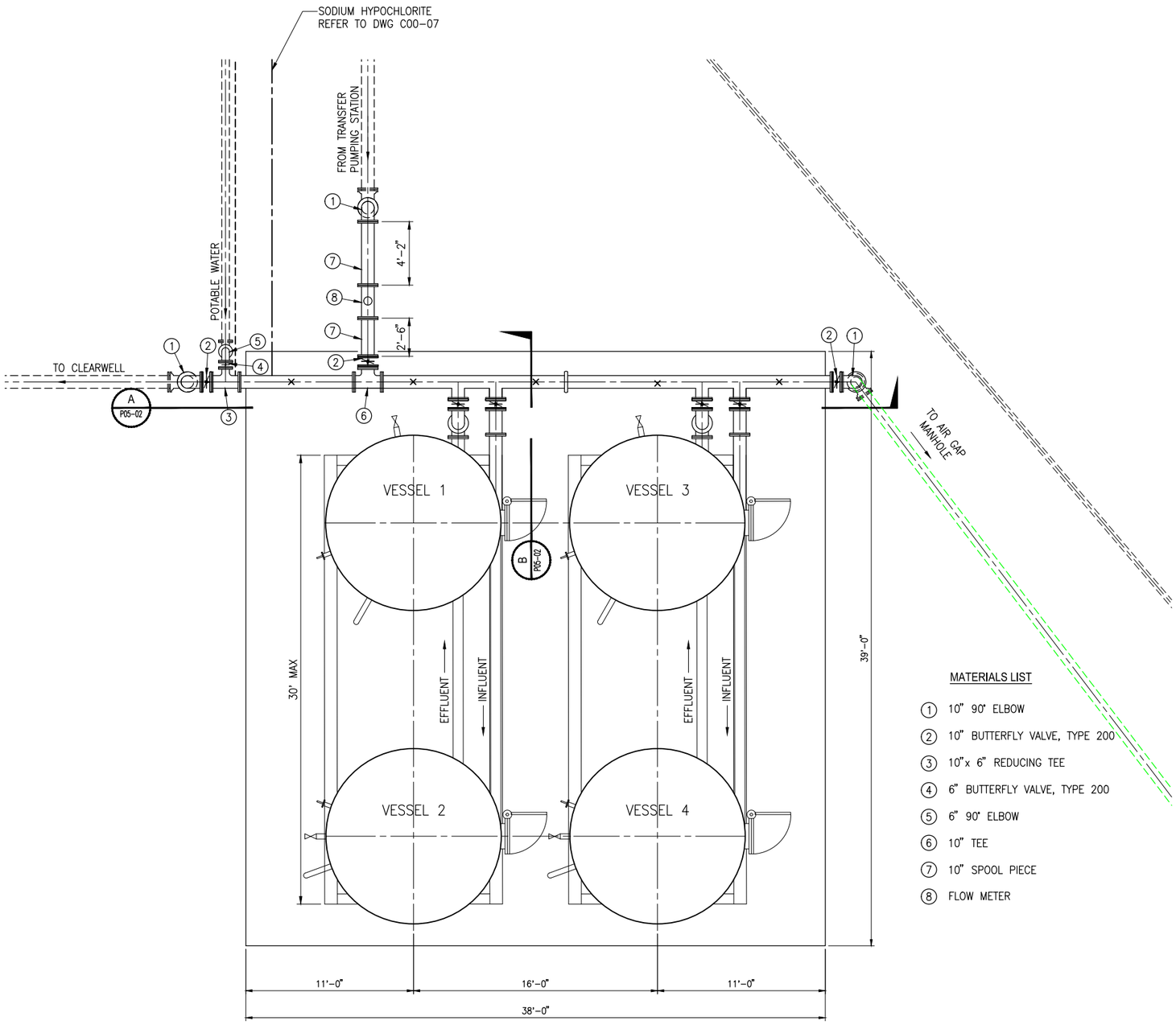

MATERIALS LIST

1. 10" 90° ELBOW
2. 10" BUTTERFLY VALVE, TYPE 200
3. 10"x 6" REDUCING TEE
4. 6" BUTTERFLY VALVE, TYPE 200
5. 6" 90° ELBOW
6. 10" TEE
7. 10" SPOOL PIECE
8. FLOW METER

NOTES:

1. × INDICATES LOCATION OF PIPE SUPPORT ON PIPE CENTERLINE

GAC PIPING PLAN

SCALE: 1/4" = 1'-0"

1 / -

PRELIMINARY 30% SUBMITTAL

0 1/2 1

IF THIS BAR DOES NOT MEASURE 1" THEN DRAWING IS NOT TO FULL SCALE

REV	DATE	DESCRIPTION	APPR
4			
3			
2			
1			

PROJECT ENGINEER | REG NUMBER | EXP DATE

AECOM
AECOM
1194 PACIFIC STREET, SUITE 204
SAN LUIS OBISPO, CA 93401
T 805.542.9840 F 805.542.9990
www.aecom.com

CITY OF EL PASO DE ROBLES
WATER TREATMENT PLANT PROJECT

GAC VESSELS PLAN

DESIGNED:
DETAILED:
CHECKED:
APPROVED:
DATE: November 2012
AECOM PROJECT NO. 60264606
P.R. PROJECT NO.
CADD STDS. AECOM

P05-01
SHEET
- OF -

DWG: V:\PASO ROBLES\60264606-WTP\000 CAD\PLANSET\3-PROCESS\P05-01.dwg Layout Name: Layout1 - Plotted by: Rodriguez, David Date: 11/28/2012 - 3:49 PM
XREFS: C-BD-PR - C-LP-PR - S-RP-06 - D-FP-CHEM-PIPING - S-NP-09 IMAGES: CITY OF PASO LOGO_1.png -

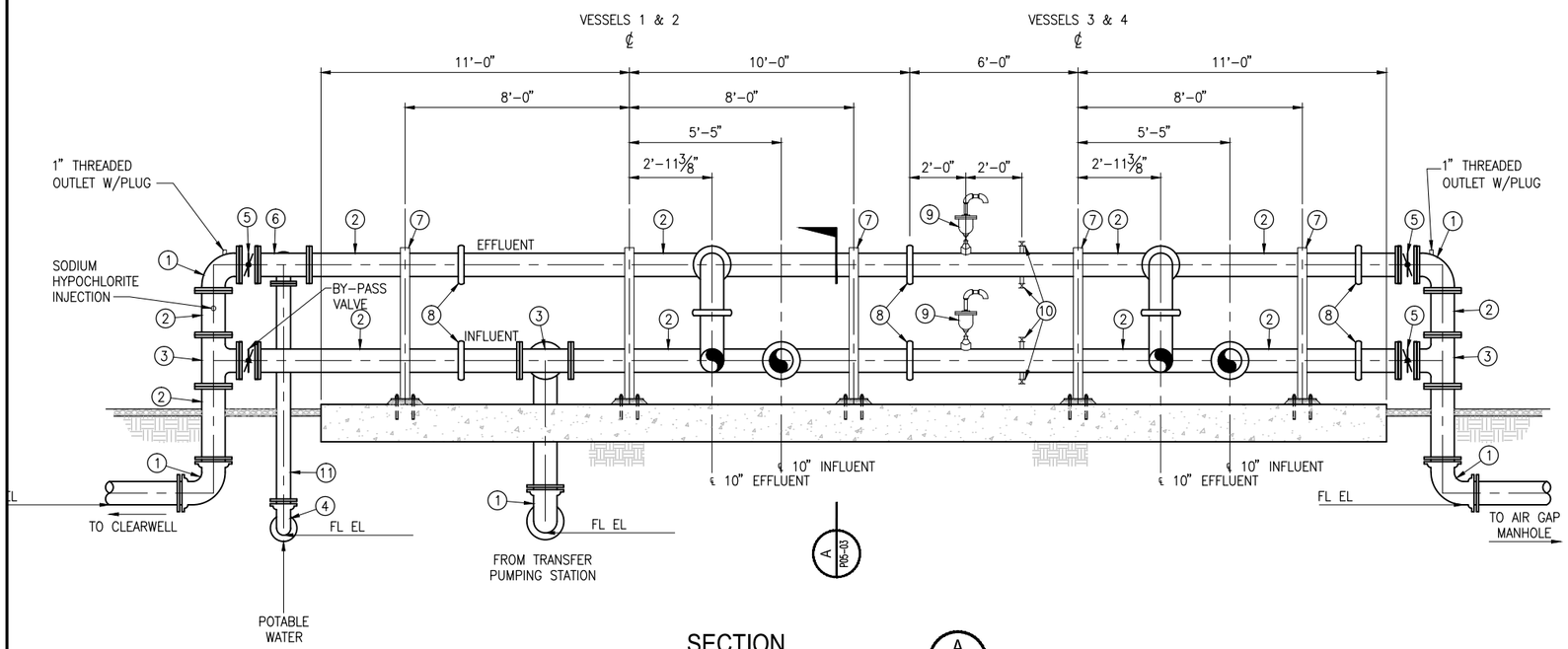

SECTION A

SCALE: 3/8" = 1'-0"

MATERIALS LIST

1. 10" 90° ELBOW
2. 10" SPOOL PIECE
3. 10" TEE
4. 6" 90° ELBOW
5. 10" BUTTERFLY VALVE, TYPE 200
6. 10"x 6" REDUCING TEE
7. PIPE SUPPORT (1 / P05-03)
8. 10" GROOVED COUPLING
9. COMBINATION AIR VALVE, TYPE 1210 (2 / PDT-06)
10. 1" THREADED OUTLET (3 / PDT-06)
11. 6" SPOOL PIECE

PRELIMINARY 30% SUBMITTAL

0 1/2 1

IF THIS BAR DOES NOT MEASURE 1" THEN DRAWING IS NOT TO FULL SCALE

REV	DATE	PROJECT ENGINEER	DESCRIPTION	REG NUMBER	EXP DATE	APPR

AECOM
AECOM
1194 PACIFIC STREET, SUITE 204
SAN LUIS OBISPO, CA 93401
T 805.542.9840 F 805.542.9990
www.aecom.com

CITY OF EL PASO DE ROBLES
WATER TREATMENT PLANT PROJECT

GAC PIPING DETAILS (1 OF 2)

DESIGNED:
DETAILED:
CHECKED:
APPROVED:
DATE: November 2012
AECOM PROJECT NO. 60264606
P.R. PROJECT NO.
CADD STDS. AECOM

P05-02
SHEET
OF -

DWG: V:\PASO ROBLES\60264606-WTP\000 CAD\PLANSET\3-PROCESS\P05-02.dwg Layout Name: Layout1 - Plotted by: Rodriguez, David Date: 11/28/2012 - 3:49 PM
XREFS: G-BD-PR IMAGES: CITY OF PASO LOGO_1.png -

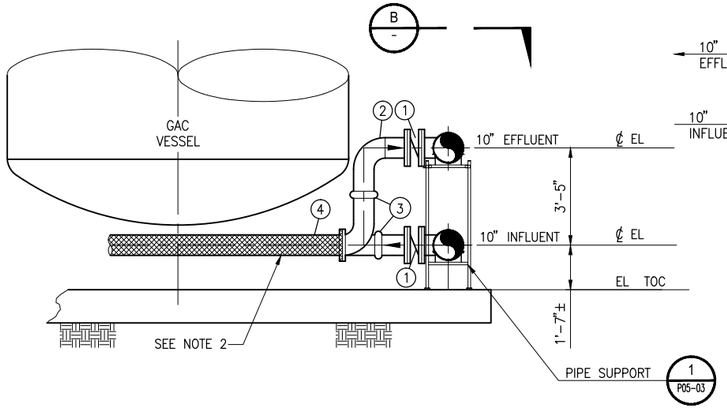

SECTION A

SCALE: 3/8" = 1'-0"

TYPICAL BOTH SKIDS

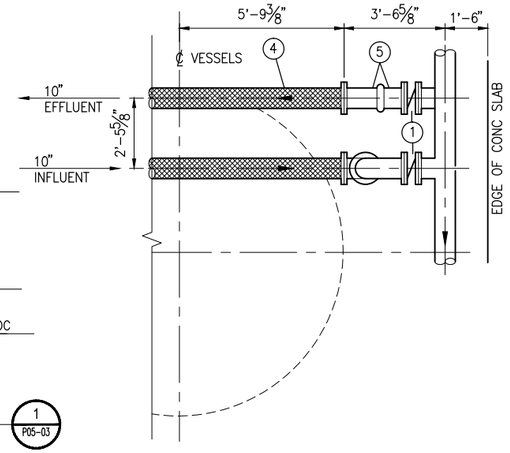

DETAIL B

SCALE: 3/8" = 1'-0"

MATERIALS LIST

1. 10" BUTTERFLY VALVE, TYPE 200
2. 10" FABRICATED STEEL 90° ELBOW
3. 10" GROOVED END COUPLING
4. 10" STL PIPE WITH FLAT FACE FLANGES BY VESSEL MFR.
5. 10" FABRICATED STEEL SPOOL PIECE

NOTES:

1. SHADING INDICATES PIPING TO BE SUPPLIED BY THE VESSEL MANUFACTURER.

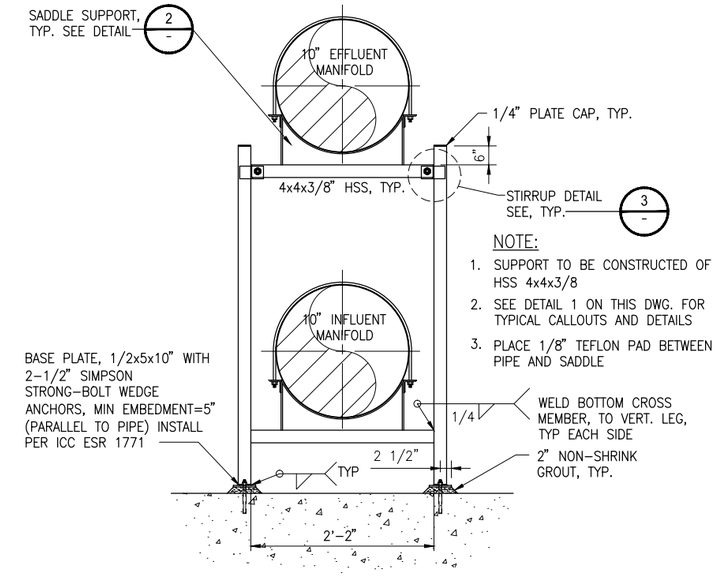

NOTE:

1. SUPPORT TO BE CONSTRUCTED OF HSS 4x4x3/8
2. SEE DETAIL 1 ON THIS DWG. FOR TYPICAL CALLOUTS AND DETAILS
3. PLACE 1/8" TEFLON PAD BETWEEN PIPE AND SADDLE

PIPE SUPPORT 1

SCALE: NTS

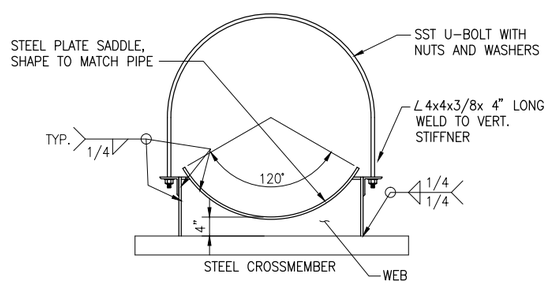

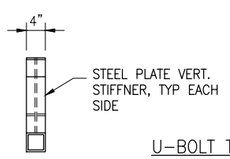

END VIEW

U-BOLT TABLE:

PIPE SIZE	U-BOLT
4" – 10"	3/8" DIA
12" – 16"	1/2" DIA

PIPE SUPPORT NOTES:

1. PLACE 1/8" THICK TEFLON PAD BETWEEN PIPE AND PIPE SADDLE (TYP). SHIM AS NECESSARY FOR FULL SUPPORT.
2. SEE PLANS FOR PIPE SIZE, TYPE, AND ELEVATION
3. ALL PIPES 4" AND LARGER SHALL BE SUPPORTED ON A PIPE SADDLE
4. SEE PLAN FOR PIPE SUPPORT SPACING
5. ALL PIPE SUPPORTS SHALL BE WELDED UNLESS SHOWN OTHERWISE. ALL WELDS SHALL BE GROUND SMOOTH.
6. ALL U-BOLTS, BOLTS, NUTS AND WASHERS SHALL BE STAINLESS STEEL.
7. ALL STEEL SUPPORTS SHALL BE FUSION BONDED EPOXY COATED.

SUPPORT MATERIAL

4" – 12", 1/4" STEEL PLATE

PIPE SADDLE 2

SCALE: NTS

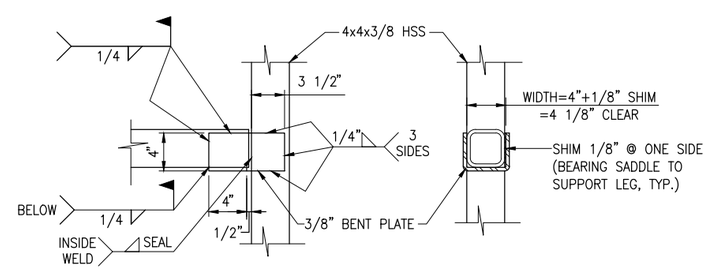

STIRRUP DETAIL 3

SCALE: NTS

PRELIMINARY 30% SUBMITTAL

0 1/2 1

IF THIS BAR DOES NOT MEASURE 1" THEN DRAWING IS NOT TO FULL SCALE

REV	DATE	DESCRIPTION	APPR

PROJECT ENGINEER | REG NUMBER | EXP DATE

AECOM
AECOM
1194 PACIFIC STREET, SUITE 204
SAN LUIS OBISPO, CA 93401
T 805.542.9840 F 805.542.9990
www.aecom.com

CITY OF EL PASO DE ROBLES
WATER TREATMENT PLANT PROJECT

GAC PIPING DETAILS

DESIGNED:
DETAILED:
CHECKED:
APPROVED:
DATE: November 2012
AECOM PROJECT NO. 60264606
P.R. PROJECT NO.
CADD STDS. AECOM

P05-03
SHEET OF -

DWG: V:\PASO ROBLES\60264606-WTP\000 CAD\PLANSET\3-PROCESS\P05-03.dwg Layout Name: Layout1 - Plotted by: Rodriguez, David Date: 11/28/2012 - 3:49 PM
XREFS: G-BD-PR IMAGES: CITY OF PASO LOGO_1.png -

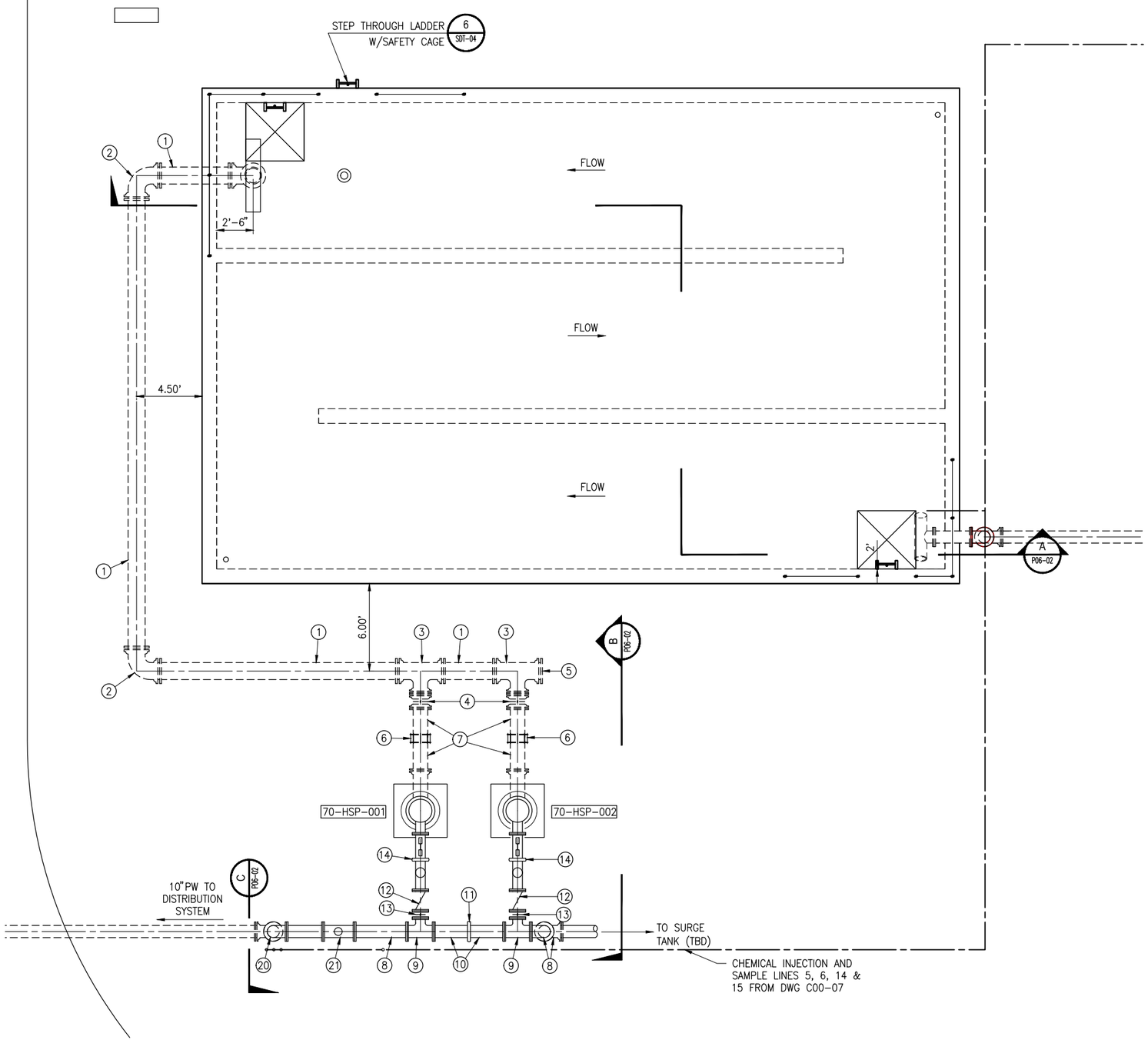

PLAN

SCALE: 1/4" = 1'-0"

MATERIAL LIST APPLIES TO: 1 (-) A (P06-02) B (P06-02) C (P06-02)

1. 14" SPOOL PIECE
2. 14" 90° ELBOW
3. 14" X 12" REDUCING TEE
4. 12" BUTTERFLY VALVE, TYPE 200
5. 14" BLIND FLANGE
6. 12" FLEXIBLE COUPLING
7. 12" SPOOL PIECE
8. 10" 90° ELBOW
9. 10" X 8" REDUCING TEE
10. 10" SPOOL PIECE
11. 10" GROOVED COUPLING
12. 8" CHECK VALVE, TYPE 790
13. 8" BUTTERFLY VALVE, TYPE 200
14. 8" GROOVED COUPLING
15. 8" SPOOL PIECE
16. VERTICAL TURBINE PUMP WITH BARREL, SEE SECTION 432150
17. 1" THREADED OUTLET WITH TYPE 300 BALL VALVE
18. PRESSURE GAUGE/ PRESSURE SWITCH
19. ADJUSTABLE PIPE SUPPORT
20. STATIC MIXER
21. 10" FLOW METER

NOTES:

1. PIPING IS TYPICAL OF BOTH PUMPS
2. ALL PUMPS DISCHARGE PIPE SIZE IS DEPENDENT UPON THE ACTUAL PUMP PROVIDED. THE CONTRACTOR SHALL COORDINATE WITH THE PUMP SUPPLIER PRIOR TO FABRICATING THE PUMP DISCHARGE PIPING.
3. INCORPORATE ANTI-VORTEX BAFFLE ON PUMP CAN PER MANUFACTURER'S RECOMMENDATIONS.

PRELIMINARY 30% SUBMITTAL

0 1/2 1

IF THIS BAR DOES NOT MEASURE 1" THEN DRAWING IS NOT TO FULL SCALE

REV	DATE	DESCRIPTION	APPR

PROJECT ENGINEER: JON HANLON
REG NUMBER
EXP DATE

AECOM
AECOM
1194 PACIFIC STREET, SUITE 204
SAN LUIS OBISPO, CA 93401
T 805.542.9840 F 805.542.9990
www.aecom.com

CITY OF EL PASO DE ROBLES
WATER TREATMENT PLANT PROJECT

CHLORINE CONTACT CHAMBER

DESIGNED: JHN
DETAILED: JPF
CHECKED: -
APPROVED:
DATE: November 2012
AECOM PROJECT NO. 60264606
P.R. PROJECT NO.
CADD STDS. AECOM

P06-01
SHEET X OF -

DWG: V:\PASO ROBLES\60264606-WTP\000 CAD\PLANSET\3-PROCESS\P06-01.dwg Layout Name: P06-01 - Plotted by: Rodriguez, David Date: 11/28/2012 - 3:53 PM
XREFS: S-RP-06 - G-BD-PR - C-LP-PR - D-FP-CHEM-PIPING - S-NP-09 IMAGES: CITY OF PASO LOGO_1.png -

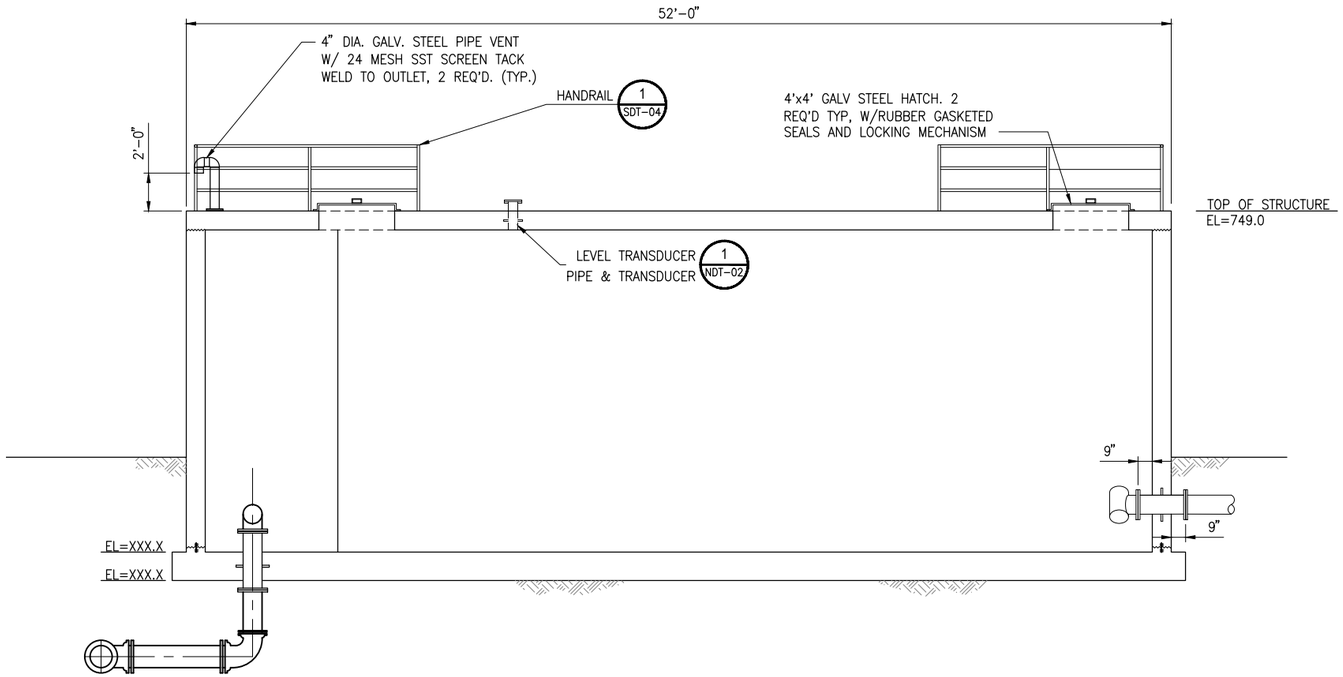

SECTION A
SCALE: 1/4" = 1'-0"

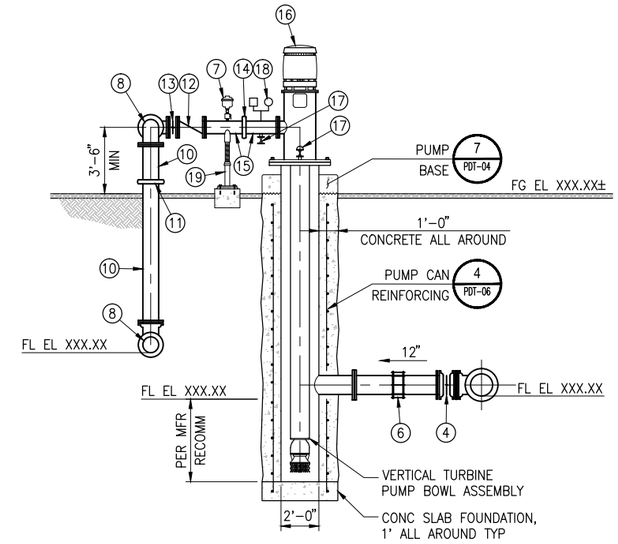

SECTION B
SCALE: 1/4" = 1'-0"

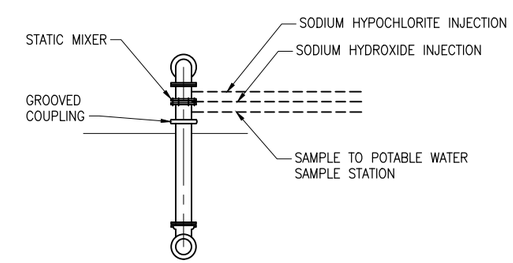

SECTION C
SCALE: 1/4" = 1'-0"

PRELIMINARY
30% SUBMITTAL

0 1/2 1
IF THIS BAR DOES NOT MEASURE 1" THEN DRAWING IS NOT TO FULL SCALE

REV	DATE	DESCRIPTION	APPR

PROJECT ENGINEER | REG NUMBER | EXP DATE

AECOM
AECOM
1194 PACIFIC STREET, SUITE 204
SAN LUIS OBISPO, CA 93401
T 805.542.9840 F 805.542.9990
www.aecom.com

CITY OF EL PASO DE ROBLES
WATER TREATMENT PLANT PROJECT

CLEARWELL SECTION

DESIGNED:
DETAILED:
CHECKED:
APPROVED:
DATE: November 2012
AECOM PROJECT NO. 60264606
P.R. PROJECT NO.
CADD STDS. AECOM

P06-02
SHEET
OF -

DWG: V:\PASO ROBLES\60264606-WTP\000 CAD\PLANSET\3-PROCESS\P06-02.dwg Layout Name: Layout1 - Plotted by: Rodriguez, David Date: 11/28/2012 - 3:49 PM
XREFS: G-BD-PR IMAGES: CITY OF PASO LOGO_1.png -

CHEMICAL PROCESS LEGEND				
		TANK FILL AND METERING PUMP SUCTION LINES		
PROCESS	CHEMICAL NAME	SUCTION PIPE	FILL CARRIER PIPE	CONTAINMENT PIPE
81	POTASIUM PERMANGANATE			
82	POLYALUMINUM CHLORIDE	1 1/2"	2"	4"
83	SODIUM HYPOCHLORITE	1"	2"	4"
84	SODIUM HYDROXIDE	1"	2"	4"

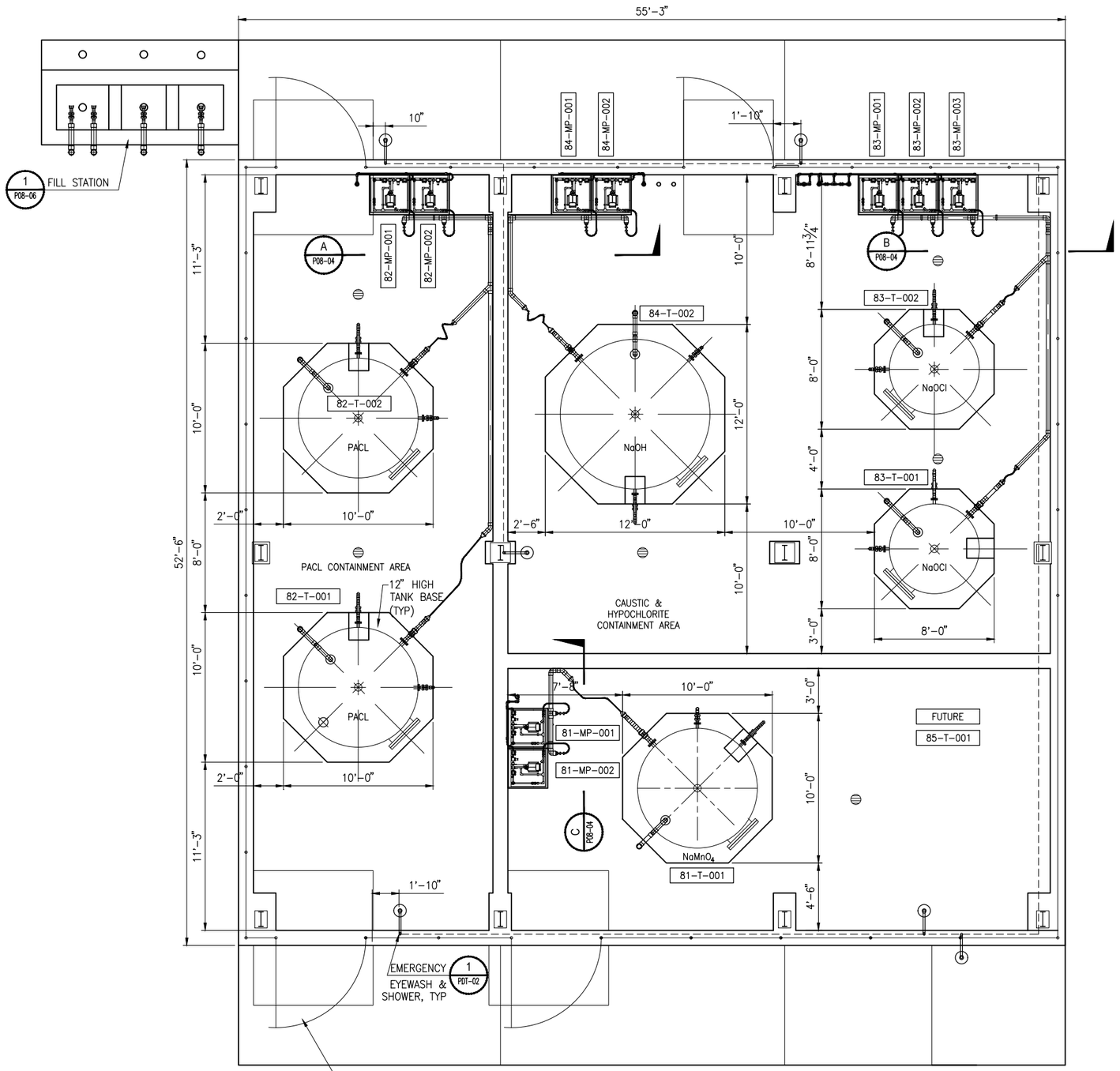

PLAN 1/-

SCALE: 1/4" = 1'-0"

NOTE:

1. COAT ALL CONCRETE FILL STATION, PEDESTALS, FLOOR, SUMPS, TANK BASE, AND INTERIOR WALLS WITHIN THE CHEMICAL BUILDING PER SPEC. 099720.

2. CONNECT CHEMICAL FEED LINES TO FEED PUMPS USING BRAIDED PVC HOSE, SCH. 80 PVC FITTINGS, AND SST WORM GEAR HOSE CLAMPS.

3. EPOXY ANCHOR PUMP SKID AT LOCATIONS SHOWN WITH SST ANCHOR BOLTS.

4. SEE SPEC 400775 FOR TANK AND EQUIPMENT IDENTIFICATION TAG REQUIREMENTS.

5. COAT ALL SST ANCHOR BOLTS W/ SCOTCHKOTE 306.

6. PROVIDE STRUT SUPPORT FOR WALL MOUNTED PVC PIPE AT EVERY 5' PER SPEC 400764.

7. SERVICE WATER CAN BE RUN OVERHEAD AT CONTRACTOR'S DISCRETION.

8. ALL TANK DISCHARGES SHALL HAVE FLEXIBLE CONNECTION USING BRAIDED PVC HOSE.

PRELIMINARY 30% SUBMITTAL

IF THIS BAR DOES NOT MEASURE 1" THEN DRAWING IS NOT TO FULL SCALE

REV	DATE	DESCRIPTION	APPR

PROJECT ENGINEER | REG NUMBER | EXP DATE

AECOM
AECOM
1194 PACIFIC STREET, SUITE 204
SAN LUIS OBISPO, CA 93401
T 805.542.9840 F 805.542.9990
www.aecom.com

CITY OF EL PASO DE ROBLES
WATER TREATMENT PLANT PROJECT

CHEMICAL FEED SYSTEM & STORAGE AREA PLAN

DESIGNED:
DETAILED:
CHECKED:
APPROVED:
DATE: November 2012
AECOM PROJECT NO. 60264606
P.R. PROJECT NO.
CADD STDS. AECOM

P08-01
SHEET OF -

DWG: V:\PASO ROBLES\60264606-WTP\000 CAD\PLANSET\3-PROCESS\P08-01.dwg Layout Name: Layout1 - Plotted by: Rodriguez, David Date: 11/28/2012 - 3:49 PM
XREFS: D-FP-CHEM-PIPING - S-NP-09 - G-BD-PR IMAGES: CITY OF PASO LOGO_1.png -

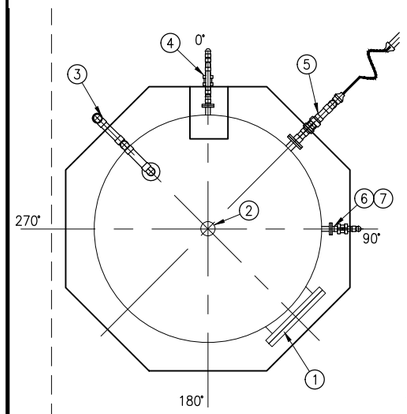

82-T-001 & 002 PACL NOZZLE ORIENTATION (1)

SCALE: 3/8"=1'-0"

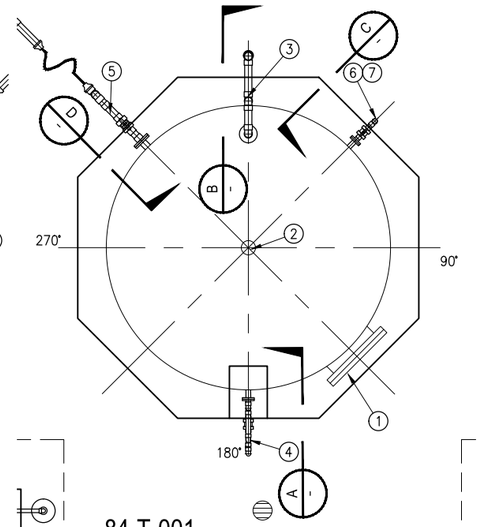

84-T-001 SODIUM HYDROXIDE (NaOH) NOZZLE ORIENTATION (2)

SCALE: 3/8"=1'-0"

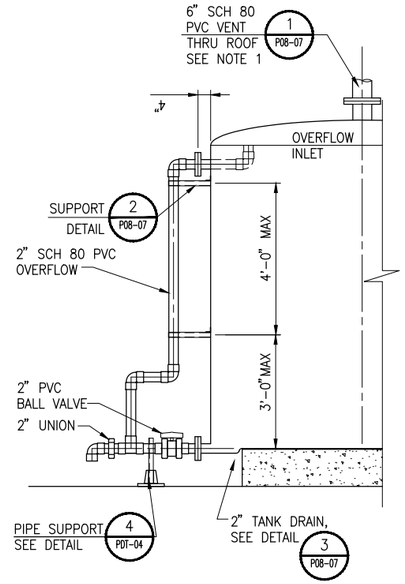

DRAIN AND OVERFLOW (A)

SCALE: 1/2"=1'-0"

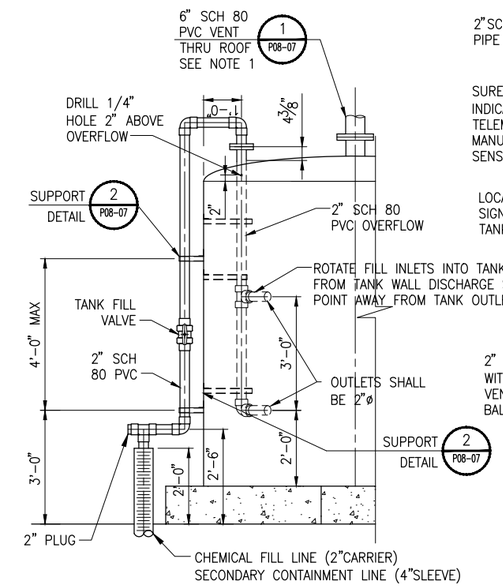

FILL / RECIRCULATION RETURN (B)

SCALE: 1/2"=1'-0"

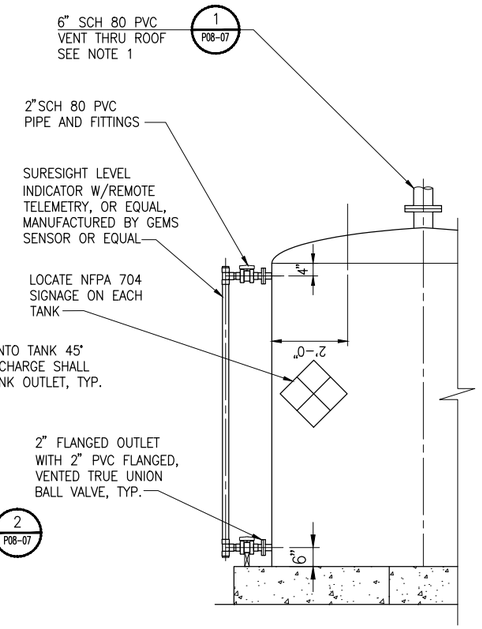

LIQUID LEVEL INDICATOR (C)

SCALE: 1/2"=1'-0"

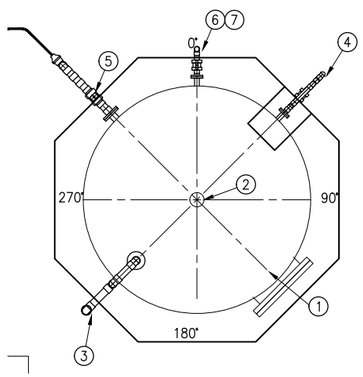

81-T-001 SODIUM PERMANGANATE NOZZLE ORIENTATION (3)

SCALE: 3/8"=1'-0"

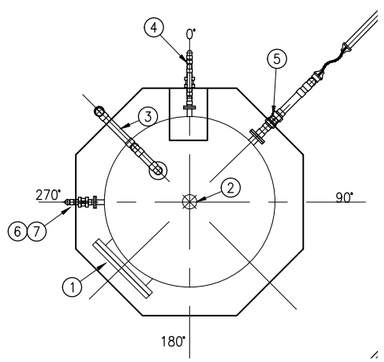

83-T-001 & 002 SODIUM HYPOCHLORITE (NaOCl) NOZZLE ORIENTATION (4)

SCALE: 3/8"=1'-0"

NOTES:

1. ONLY NAOCL TANKS REQUIRE ROOF VENTS. ATTACH SCREENED VENTS DIRECTLY OVER TANK VENT FOR ALL OTHER TANKS.

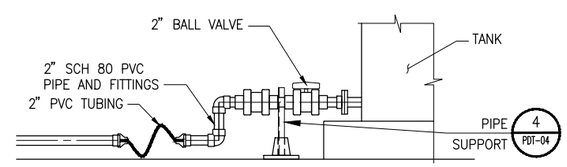

TANK OUTLET TO CHEMICAL FEED PUMPS (D)

SCALE: 1/2"=1'-0"

ID TAG	CHEMICAL SERVICE	MATERIAL	DIAMETER	SHELL HEIGHT	VOLUME
81-T-001	SODIUM PERMANGANATE	FRP	8 FT	8 FT	2,960 GAL
82-T-001	POLYALUMINUM CHLORIDE	FRP	8 FT	8 FT	2,960 GAL
82-T-002	POLYALUMINUM CHLORIDE	FRP	8 FT	8 FT	2,960 GAL
83-T-001	SODIUM HYPOCHLORITE	FRP	6 FT	8 FT	1,680 GAL
83-T-002	SODIUM HYPOCHLORITE	FRP	6 FT	8 FT	1,680 GAL
84-T-001	SODIUM HYDROXIDE	FRP	10 FT	10 FT	5,800 GAL

NOZZLE AND PORT ORIENTATION

ITEM	81-T-001	82-T-001	82-T-002	83-T-001	83-T-002	84-T-001	FLG SIZE	DESCRIPTION	DETAIL VIEW	ELEVATION
①	135	135	135	225	225	135	24"	ACCESS MANWAY	-	CL 24" ABOVE TANK PAD
②	-	-	-	-	-	-	6"	VENT LINE	-	CENTER OF TANK ROOF
③	225	315	315	315	315	0	2"	FILL LINE	SECTION B	CL 12" FROM EDGE OF SIDEWALL, VALVE 4' ABOVE FF (B / -)
④	45	0	0	0	0	180	2"	DRAIN/OVERFLOW	SECTION A	CL 6" BELOW TOP OF SIDEWALL (A / -)
⑤	315	45	45	45	45	315	2"	OUTLET	SECTION D	CL 6" ABOVE TANK PAD (D / -)
⑥	0	90	90	270	270	45	2"	MAGNETIC LEVEL GAUGE (UPPER PORT)	SECTION C	CL 4" BELOW TOP OF SIDEWALL (C / -)
⑦	0	90	90	270	270	45	2"	MAGNETIC LEVEL GAUGE (LOWER PORT)	SECTION C	CL 6" ABOVE TANK PAD (C / -)

PRELIMINARY 30% SUBMITTAL

0 1/2 1

IF THIS BAR DOES NOT MEASURE 1" THEN DRAWING IS NOT TO FULL SCALE

REV	DATE	DESCRIPTION	APPR
1			
2			
3			
4			

PROJECT ENGINEER | REG NUMBER | EXP DATE

AECOM
1194 PACIFIC STREET, SUITE 204
SAN LUIS OBISPO, CA 93401
T 805.542.9990 F 805.542.9940
www.aecom.com

CITY OF EL PASO DE ROBLES
WATER TREATMENT PLANT PROJECT

CHEMICAL STORAGE AND FEED SYSTEM AREA SECTIONS AND DETAILS

DESIGNED:
DETAILED:
CHECKED:
APPROVED:
DATE: November 2012
AECOM PROJECT NO. 60264606
P.R. PROJECT NO.
CADD STDS. AECOM

P08-03
SHEET - OF -

DWG: V:\PASO ROBLES\60264606-WTP\000 CAD\PLANSET\3-PROCESS\P08-03.dwg Layout Name: Layout1 - Plotted by: Rodriguez, David Date: 11/28/2012 - 3:49 PM
XREFS: C-BD-PR - S-NP-09 - D-FP-CHEM-PIPING IMAGES: CITY OF PASO LOGO_1.png -

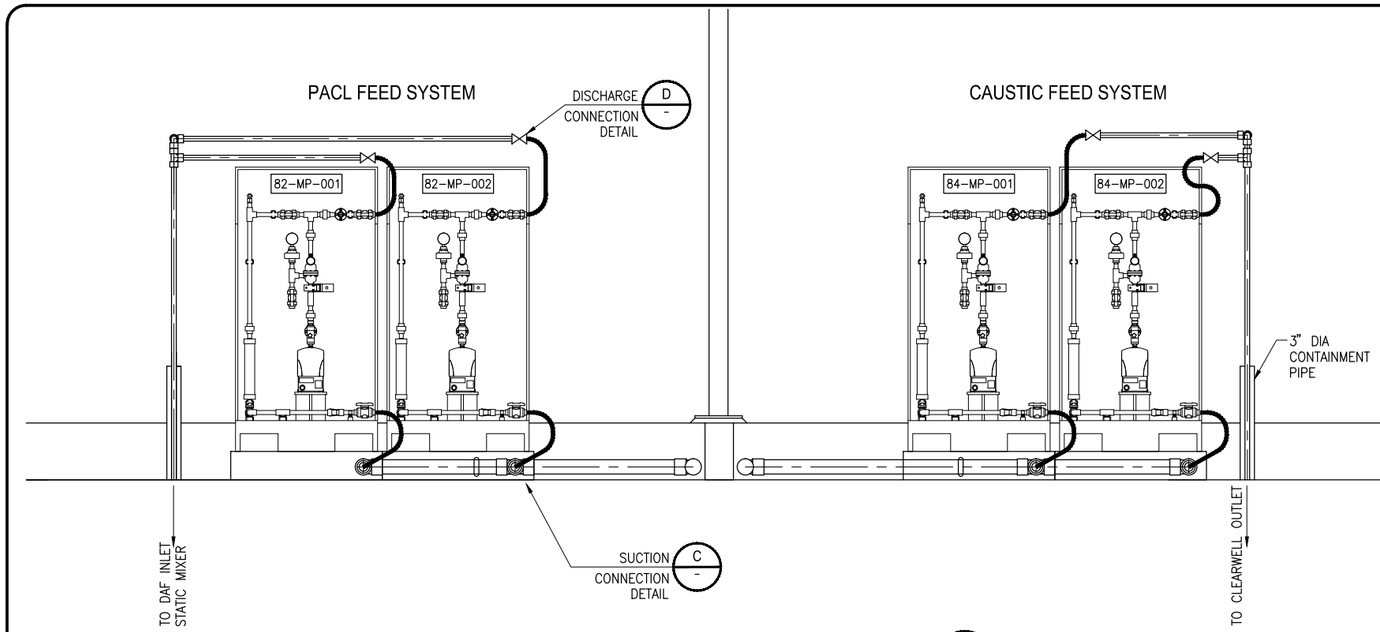

SECTION A -

SCALE 3/4" = 1'-0"

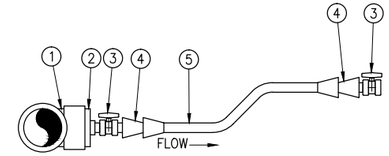

SUCTION CONNECTION DETAIL C -

NOT TO SCALE

POLYMER CONNECTION SIZING:

1. 2" TEE SxSxNPT
2. 2"x ½" NPT BUSHING
3. ½" NPT BALL VALVE
4. ½" NPT HOSE BARB W/ SST WORM GEAR HOSE CLAMP
5. ½" PVC TUBING
6. ¾" SxNPT ADAPTER
7. ¾" SCH 80 PVC

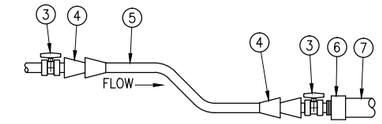

DISCHARGE CONNECTION DETAIL D -

NOT TO SCALE

CHEMICAL CONNECTION SIZING:

1. 1" TEE SxSxNPT
2. 1"x ½" NPT BUSHING
3. ½" NPT BALL VALVE
4. ½" NPT HOSE BARB W/ SST WORM GEAR HOSE CLAMP
5. ½" PVC TUBING
6. ¾"" SxNPT ADAPTER
7. ¾"" SCH 80 PVC

NOTES:

1. CHEMICAL PIPING TO BE SUPPORTED PER 4 PDT-04 / 5 PDT-04

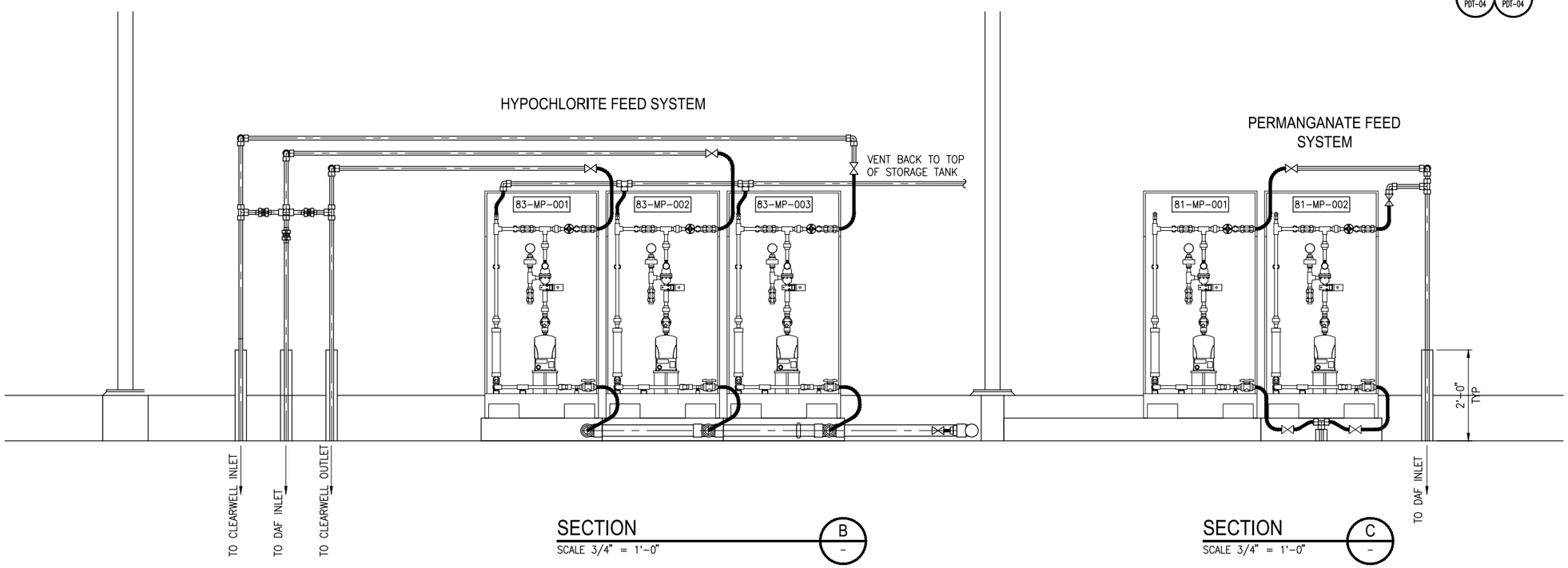

SECTION B -

SCALE 3/4" = 1'-0"

SECTION C -

SCALE 3/4" = 1'-0"

PRELIMINARY 30% SUBMITTAL

0 1/2 1

IF THIS BAR DOES NOT MEASURE 1" THEN DRAWING IS NOT TO FULL SCALE

REV	DATE	DESCRIPTION	APPR
1			
2			
3			
4			

PROJECT ENGINEER | REG NUMBER | EXP DATE

AECOM
AECOM
1194 PACIFIC STREET, SUITE 204
SAN LUIS OBISPO, CA 93401
T 805.542.9840 F 805.542.9990
www.aecom.com

CITY OF EL PASO DE ROBLES
WATER TREATMENT PLANT PROJECT

CHEMICAL FEED SYSTEM & STORAGE AREA SECTIONS AND DETAILS

DESIGNED:
DETAILED:
CHECKED:
APPROVED:
DATE: November 2012
AECOM PROJECT NO. 60264606
P.R. PROJECT NO.
CADD STDS. AECOM

P08-04
SHEET
- OF -

DWG: V:\PASO ROBLES\60264606-WTP\000 CAD\PLANSET\3-PROCESS\P08-04.dwg Layout Name: Layout1 - Plotted by: Rodriguez, David Date: 11/28/2012 - 3:49 PM
XREFS: G-BD-PR IMAGES: CITY OF PASO LOGO_1.png -

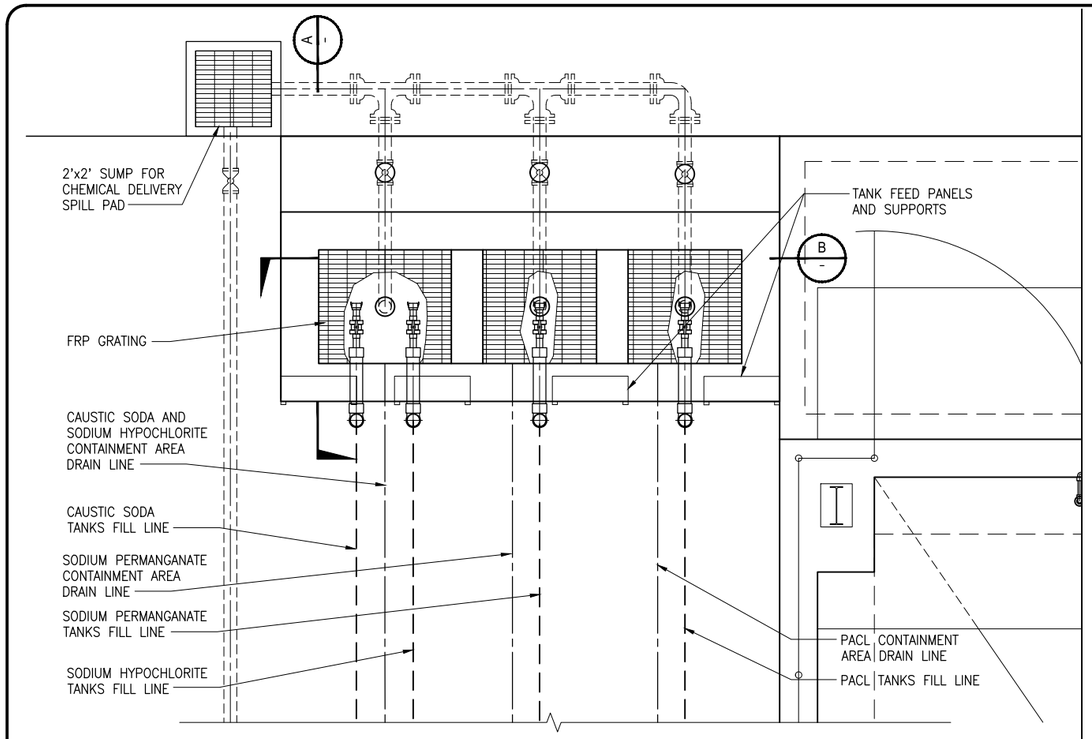

FILL STATION PIPING PLAN (1)

SCALE:1/2"=1'-0"

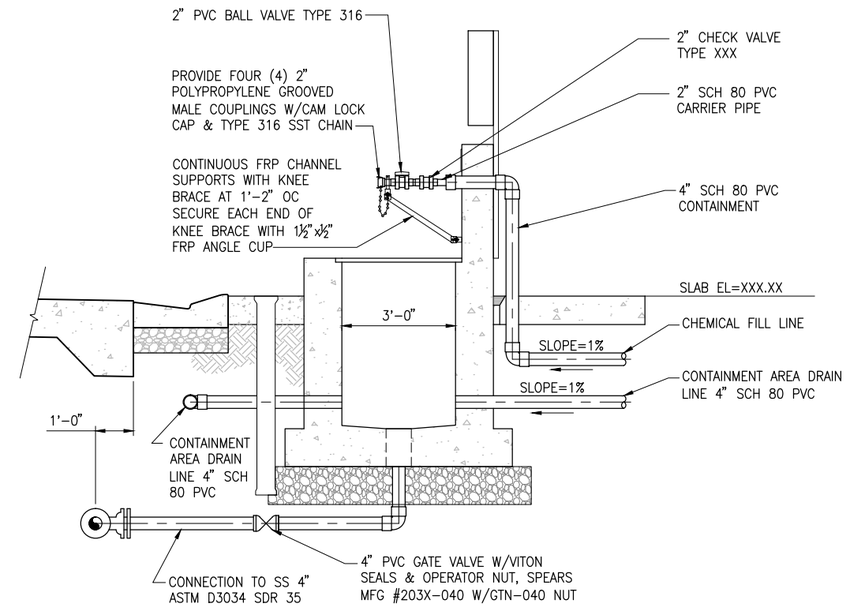

FILL STATION SECTION (A)

SCALE:1/2"=1'-0"

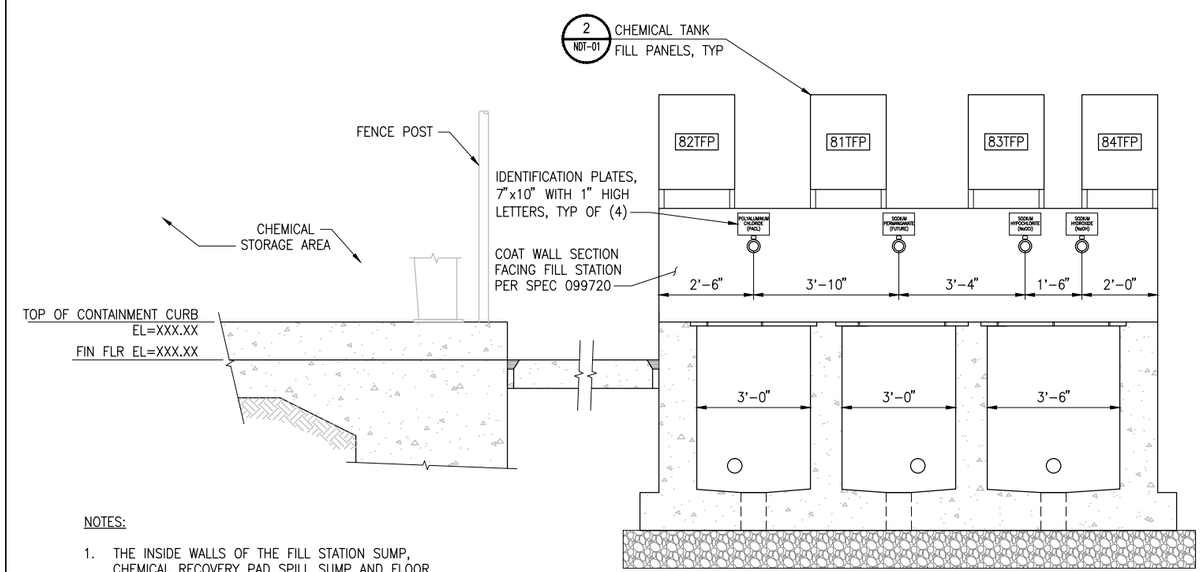

NOTES:

1. THE INSIDE WALLS OF THE FILL STATION SUMP, CHEMICAL RECOVERY PAD SPILL SUMP AND FLOOR, SHALL BE COATED WITH CHEMICAL RESISTANT COATING PER SPECIFICATION 099720.
2. EXTERIOR WALL SECTIONS & SUMP AROUND FILL STATION, SHALL BE COATED WITH CHEMICAL RESISTANT COATING PER SPEC. 099720.

FILL STATION SECTION (B)

SCALE:1/2"=1'-0"

PRELIMINARY 30% SUBMITTAL

0 1/2 1

IF THIS BAR DOES NOT MEASURE 1" THEN DRAWING IS NOT TO FULL SCALE

REV	DATE	DESCRIPTION	APPR

PROJECT ENGINEER | REG NUMBER | EXP DATE

AECOM
AECOM
1194 PACIFIC STREET, SUITE 204
SAN LUIS OBISPO, CA 93401
T 805.542.9840 F 805.542.9990
www.aecom.com

CITY OF EL PASO DE ROBLES
WATER TREATMENT PLANT PROJECT

CHEMICAL FILL STATION PLAN & SECTIONS

DESIGNED:
DETAILED:
CHECKED:
APPROVED:
DATE: November 2012
AECOM PROJECT NO. 60264606
P.R. PROJECT NO.
CADD STDS. AECOM

P08-06
SHEET - OF -

DWG: V:\PASO ROBLES\60264606-WTP\000 CAD\PLANSET\3-PROCESS\P08-06.dwg Layout Name: Layout1 (2) - Plotted by: Rodriguez, David Date: 11/28/2012 - 3:49 PM
XREFS: G-BD-PR - C-LP-PR - S-RP-06 - D-FP-CHEM-PIPING - S-NP-09 IMAGES: CITY OF PASO LOGO_1.png -

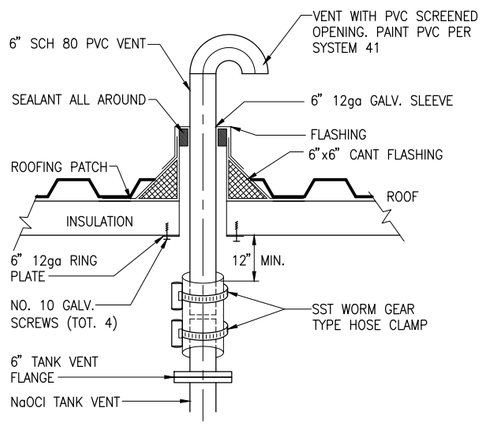

VENT ROOF PENETRATION

SCALE: N.T.S.

1 / -

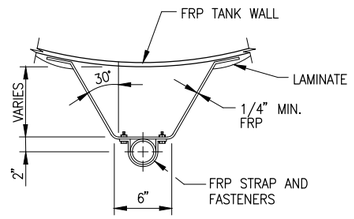

SUPPORT DETAIL

NTS

2 / -

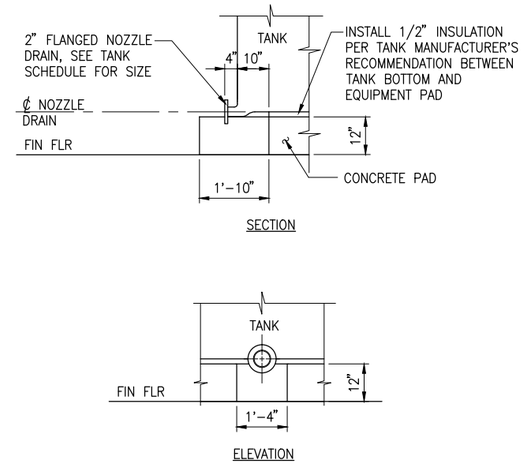

DRAIN DETAIL

SCALE: 1/2"=1'-0"

3 / -

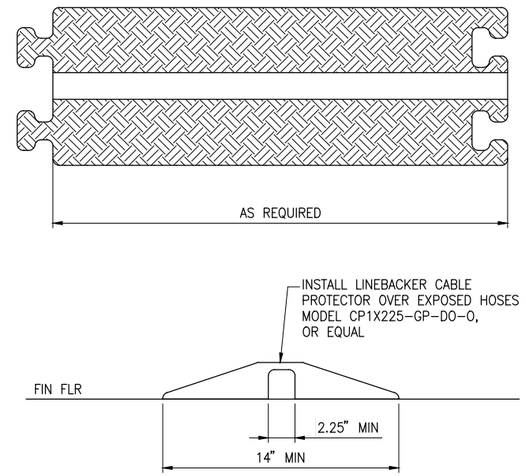

HOSE GUARD DETAIL

SCALE: NTS

4 / -

PRELIMINARY
30% SUBMITTAL

0 1/2 1

IF THIS BAR DOES NOT MEASURE 1" THEN DRAWING IS NOT TO FULL SCALE

REV	DATE	DESCRIPTION	APPR
1			
2			
3			
4			

PROJECT ENGINEER | REG NUMBER | EXP DATE

AECOM
AECOM
1194 PACIFIC STREET, SUITE 204
SAN LUIS OBISPO, CA 93401
T 805.542.9840 F 805.542.9990
www.aecom.com

CITY OF EL PASO DE ROBLES
WATER TREATMENT PLANT PROJECT

MISCELLANEOUS CHEMICAL DETAILS

DESIGNED:
DETAILED:
CHECKED:
APPROVED:
DATE: November 2012

AECOM PROJECT NO.
60264606

P.R. PROJECT NO.

CADD STDS.
AECOM

P08-07
SHEET
- OF -

DWG: V:\PASO ROBLES\60264606-WTP\000 CAD\PLANSET\3-PROCESS\P08-07.dwg Layout Name: Paper - Plotted by: Rodriguez, David Date: 11/28/2012 - 4:25 PM
XREFS: G-BD-PR IMAGES: CITY OF PASO LOGO_1.png -

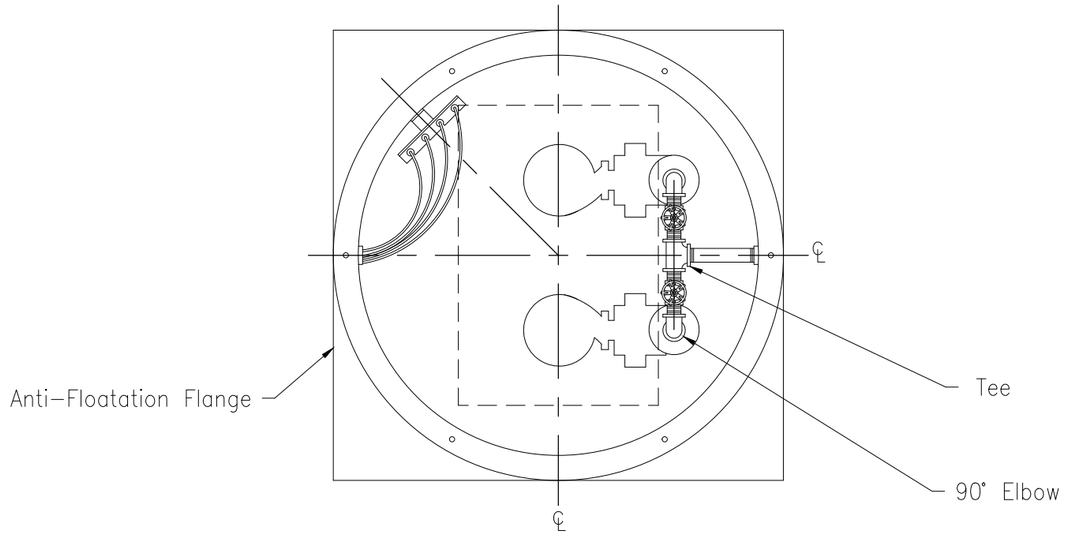

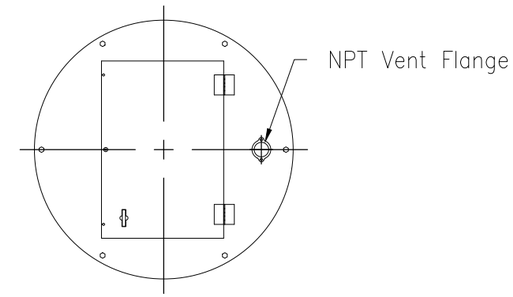

Hinged and Lockable Cover

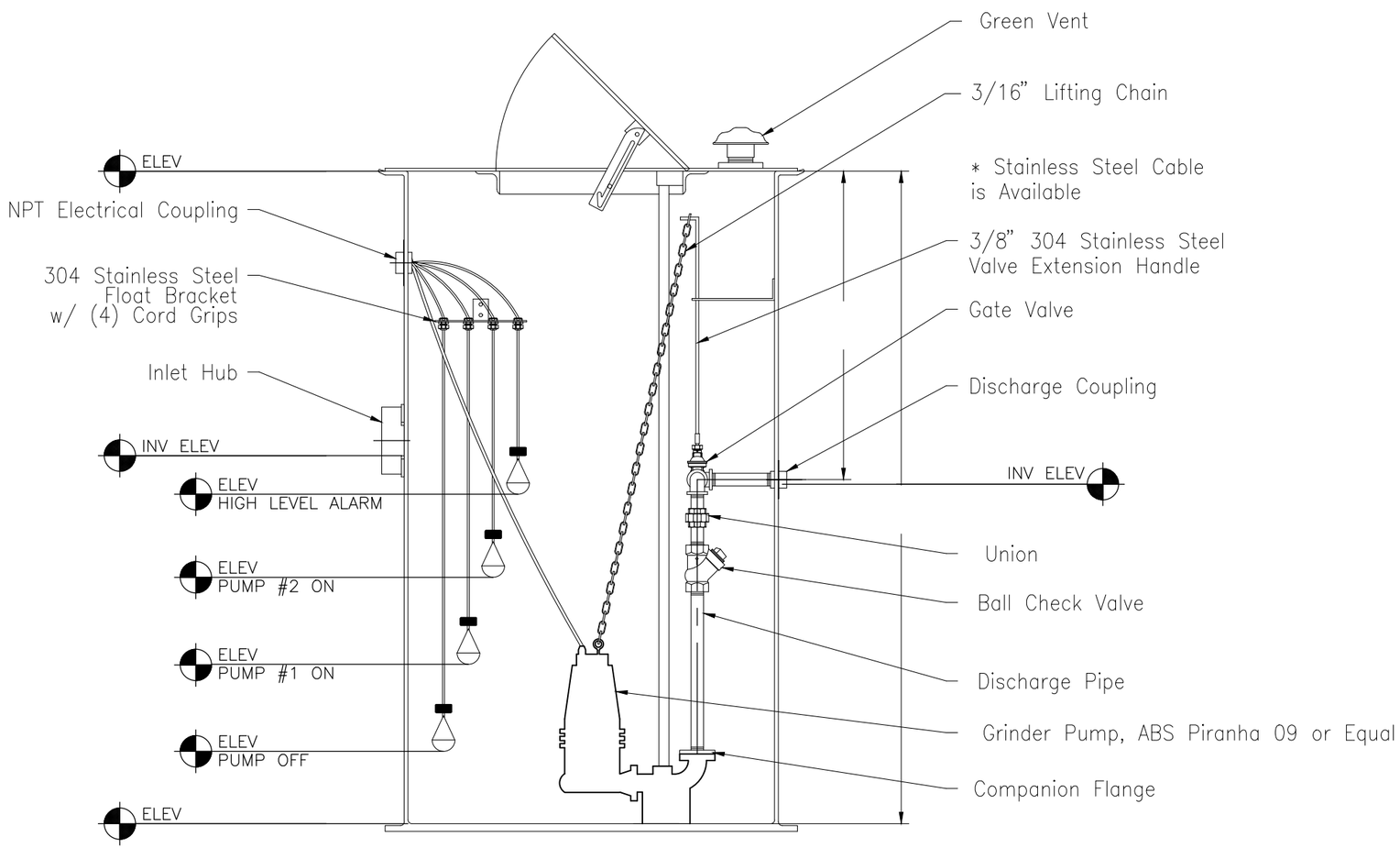

PRELIMINARY 30% SUBMITTAL

0 1/2 1

IF THIS BAR DOES NOT MEASURE 1" THEN DRAWING IS NOT TO FULL SCALE

REV	DATE	DESCRIPTION	APPR

PROJECT ENGINEER: JON HANLON
REG NUMBER
EXP DATE

AECOM
AECOM
1194 PACIFIC STREET, SUITE 204
SAN LUIS OBISPO, CA 93401
T 805.542.9840 F 805.542.9990
www.aecom.com

CITY OF EL PASO DE ROBLES
WATER TREATMENT PLANT PROJECT

SEWER LIFT STATION
PLAN AND SECTION

DESIGNED: JJR
DETAILED: JPF
CHECKED: -
APPROVED:
DATE: November 2012
AECOM PROJECT NO. 60264606
P.R. PROJECT NO.
CADD STDS. AECOM

P09-01
SHEET
- OF -

DWG: V:\PASO ROBLES\60264606-WTP\000 CAD\PLANSET\3-PROCESS\P09-01.dwg Layout Name: P09-01 - Plotted by: Rodriguez, David Date: 11/28/2012 - 3:50 PM
XREFS: G-BD-PR - C-LP-PR - S-RP-06 - D-FP-CHEM-PIPING - S-NP-09 - A-FP-MEMB IMAGES: CITY OF PASO LOGO_1.png -

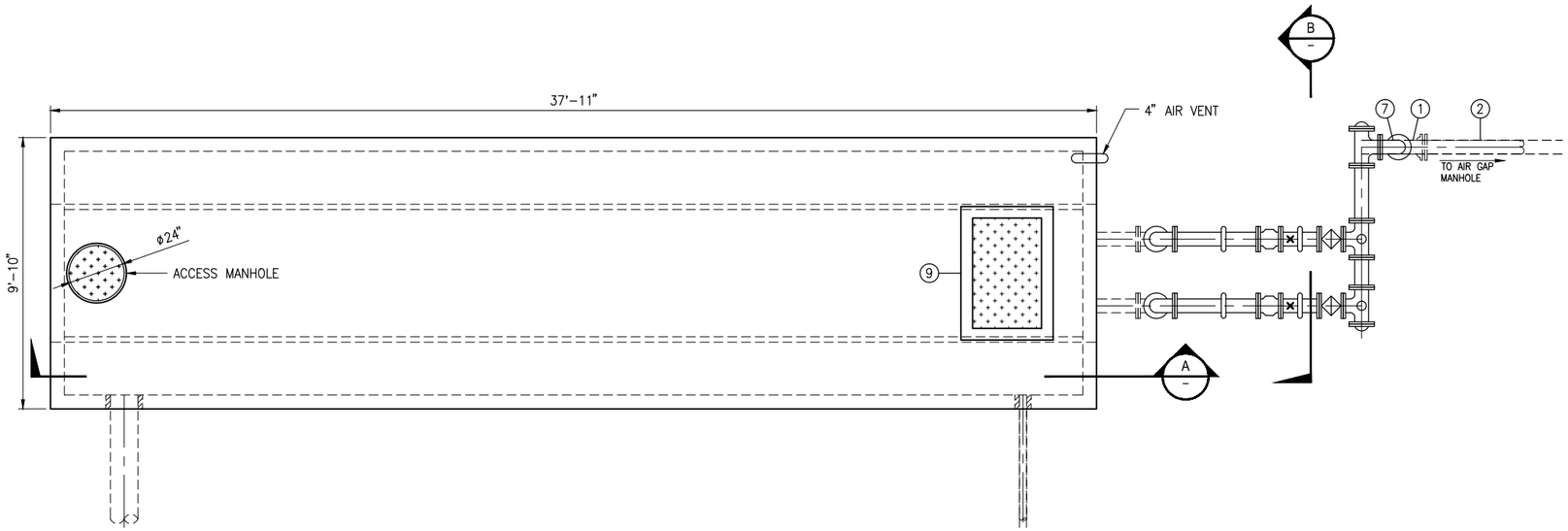

RESIDUALS TANK (1)

SCALE: 3/8" = 1'-0"

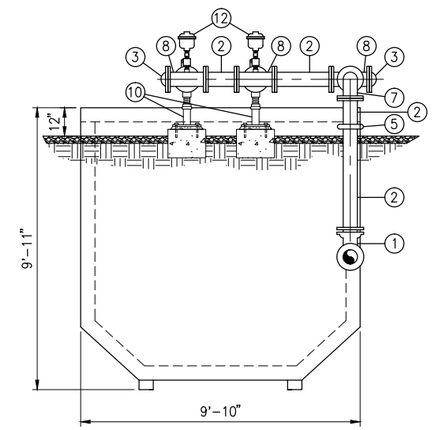

SECTION (B)

SCALE: 3/8" = 1'-0"

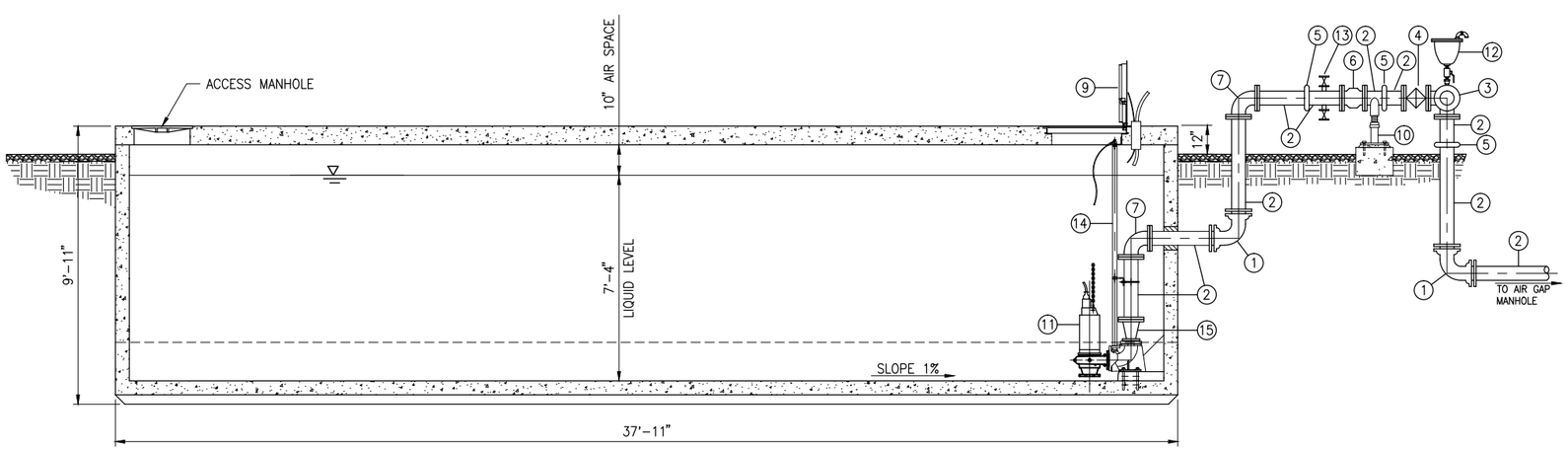

SECTION (A)

SCALE: 3/8" = 1'-0"

MATERIAL LIST APPLIES TO (1) (A) (B)

ITEM	DESCRIPTION
1	6" 90° ELBOW, MJxMJ
2	6"ø DIP SPOOL
3	6" BLIND FLANGE
4	6" PLUG VALVE, FLGxFLG
5	6" GROOVED END COUPLING
6	6" CHECK VALVE, TYPE 790
7	6" 90° ELBOW, FLGxFLG
8	6" TEE, FLG'D
9	30"x48" ALUMINUM HATCH COVER PER SPECIFICATION SECTION 055300
10	ADJUSTABLE PIPE SUPPORT (1 / PDT-04)
11	SUBMERSIBLE PUMP SEE SPECIFICATION SECTION 432132
12	1" COMBINATION AIR VALVE, TYPE 1210
13	1" THREADED OUTLET
14	TYPE 316 STAINLESS STEEL SLIDE RAIL SYSTEM
15	3"x6" REDUCER, FLGxFLG

NOTES:

1. PIPING IS TYPICAL OF BOTH PUMPS
2. ALL PUMPS DISCHARGE PIPE SIZE IS DEPENDENT UPON THE ACTUAL PUMP PROVIDED. THE CONTRACTOR SHALL COORDINATE WITH THE PUMP SUPPLIER PRIOR TO FABRICATING THE PUMP DISCHARGE PIPING.

PRELIMINARY 30% SUBMITTAL

0 1/2 1
IF THIS BAR DOES NOT MEASURE 1" THEN DRAWING IS NOT TO FULL SCALE

REV	DATE	DESCRIPTION	APPR

PROJECT ENGINEER JOM HANLON
REG NUMBER
EXP DATE

AECOM
AECOM
1194 PACIFIC STREET, SUITE 204
SAN LUIS OBISPO, CA 93401
T 805.542.9840 F 805.542.9990
www.aecom.com

CITY OF EL PASO DE ROBLES
WATER TREATMENT PLANT PROJECT

RESIDUALS TANK PLAN AND DETAILS

DESIGNED: JJR
DETAILED: JPF
CHECKED: -
APPROVED:
DATE: November 2012
AECOM PROJECT NO. 60264606
P.R. PROJECT NO.
CADD STDS. AECOM

P09-02
SHEET X OF -

DWG: V:\PASO ROBLES\60264606-WTP\000 CAD\PLANSET\3-PROCESS\P09-02.dwg Layout Name: P09-02 - Plotted by: Rodriguez, David Date: 11/28/2012 - 3:50 PM
XREFS: G-BD-PR - C-LP-PR - S-RP-06 - D-FP-CHEM-PIPING - S-NP-09 - A-FP-MEMB IMAGES: CITY OF PASO LOGO_1.png -

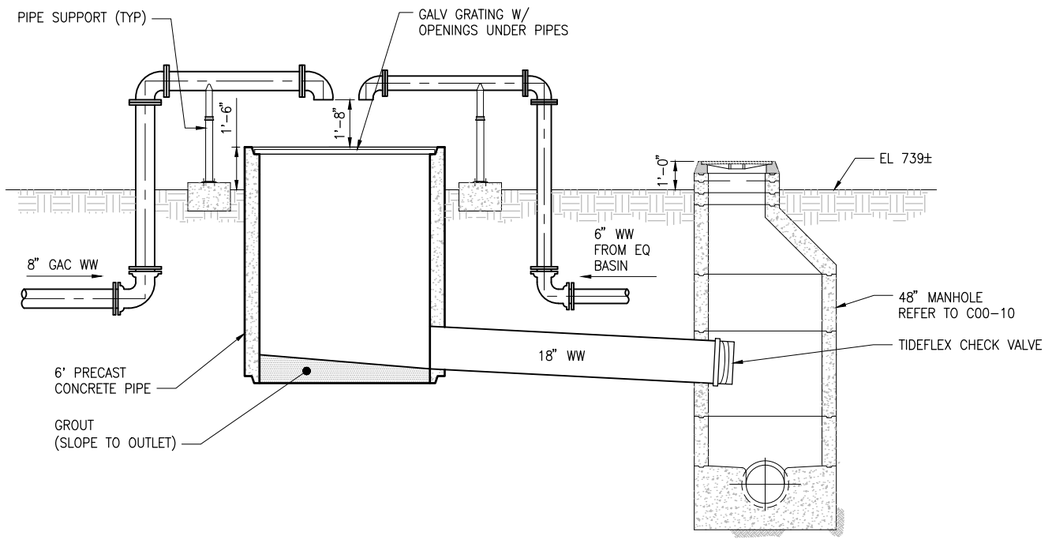

AIR GAP

SCALE: 3/8"=1'-0"

1 / -

PRELIMINARY
30% SUBMITTAL

0 1/2 1

IF THIS BAR DOES NOT MEASURE 1" THEN DRAWING IS NOT TO FULL SCALE

REV	DATE	DESCRIPTION	APPR
4			
3			
2			
1			

PROJECT ENGINEER: JON HANLON
REG NUMBER
EXP DATE

AECOM
AECOM
1194 PACIFIC STREET, SUITE 204
SAN LUIS OBISPO, CA 93401
T 805.542.9840 F 805.542.9990
www.aecom.com

CITY OF EL PASO DE ROBLES
WATER TREATMENT PLANT PROJECT

RESIDUALS TANK PLAN AND DETAILS

DESIGNED: JJR
DETAILED: JPF
CHECKED: -
APPROVED:
DATE: November 2012
AECOM PROJECT NO. 60264606
P.R. PROJECT NO.
CADD STDS. AECOM

P09-03
SHEET
- OF -

DWG: V:\PASO ROBLES\60264606-WTP\000 CAD\PLANSET\3-PROCESS\P09-03.dwg Layout Name: P09-03 - Plotted by: Rodriguez, David Date: 11/28/2012 - 3:50 PM
XREFS: G-BD-PR IMAGES: CITY OF PASO LOGO_1.png -

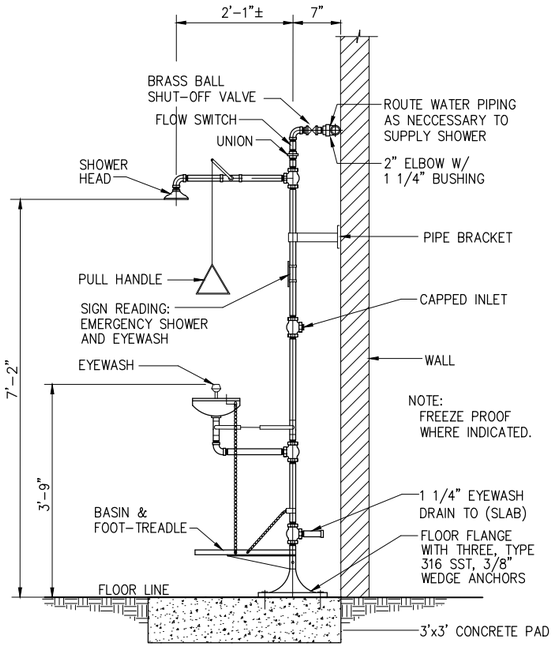

EMERGENCY EYEWASH (1 / -)

SCALE: NONE

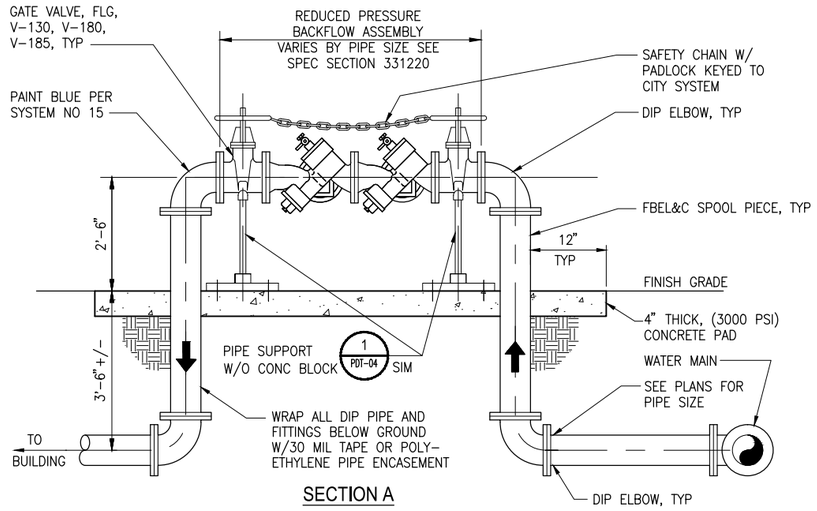

SECTION A

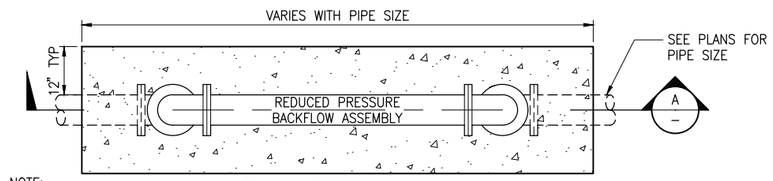

PLAN

NOTE:
PROVIDE THRUST BLOCKING SEE 2 PDT-05

RP BACKFLOW SYSTEM (2 / -)

SCALE:

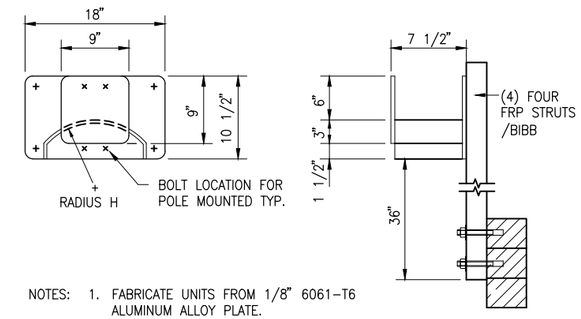

NOTES:
1. FABRICATE UNITS FROM 1/8" 6061-T6 ALUMINUM ALLOY PLATE. USE TYPE A U.O.N. ON DRAWINGS
2. PROVIDE EA. HOSE RACK W/ 50' OF HOSE
3. ATTACH BIBB TO FRP STRUTS WITH 2 3/8" TYPE 316 SST BOLTS, NUTS AND WASHER.
4. ATTACH TO CONCRETE BLOCK WALL WITH 4-3/8" SST STUD TYPE WEDGE ANCHORS.

WALL MOUNTED HOSE RACK (3 / -)

SCALE: N.T.S.

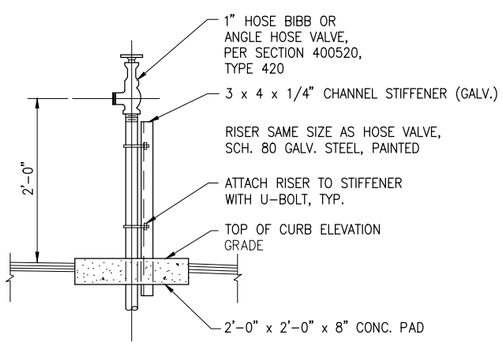

NOTE:
WALL MOUNTED HOSE RACK SHALL BE PROVIDED AT ALL HOSE BIBB LOCATIONS SEE DETAIL 3 / -

HOSE BIBB (4 / -)

SCALE: N.T.S.

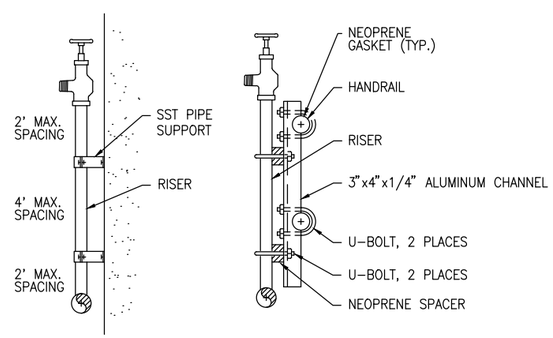

WALL MOUNTED | HANDRAIL MOUNTED

ALTERNATE HOSE VALVES HYDRANT MOUNTING (5 / -)

SCALE: NTS ALL SUPPORT SST MATERIAL

PRELIMINARY 30% SUBMITTAL

0 1/2 1
IF THIS BAR DOES NOT MEASURE 1" THEN DRAWING IS NOT TO FULL SCALE

REV	DATE	DESCRIPTION	APPR

PROJECT ENGINEER | REG NUMBER | EXP DATE

AECOM
1194 PACIFIC STREET, SUITE 204
SAN LUIS OBISPO, CA 93401
T 805.542.9840 F 805.542.9990
www.aecom.com

CITY OF EL PASO DE ROBLES
WATER TREATMENT PLANT PROJECT

MISCELLANEOUS DETAILS

DESIGNED:
DETAILED:
CHECKED:
APPROVED:
DATE: November 2012
AECOM PROJECT NO. 60264606
P.R. PROJECT NO.
CADD STDS. AECOM

PDT-02
SHEET - OF -

DWG: V:\PASO ROBLES\60264606-WTP\000 CAD\PLANSET\3-PROCESS\PDT-02.dwg Layout Name: Paper - Plotted by: Rodriguez, David Date: 11/28/2012 - 3:50 PM
XREFS: C-BD-PR IMAGES: CITY OF PASO LOGO_1.png -

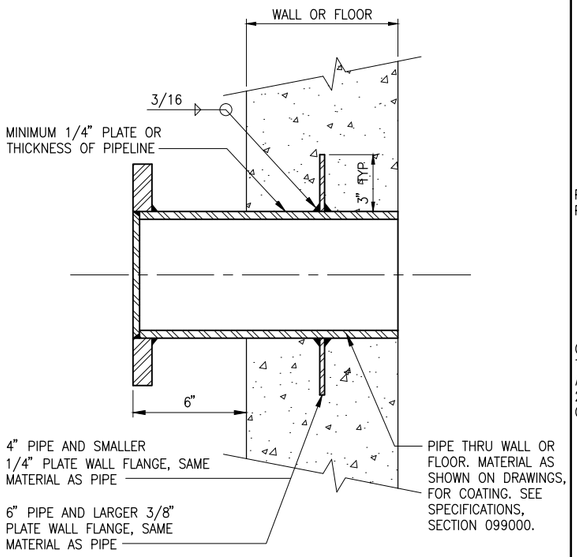

FABRICATED PIPE THIMBLE (1 / -)

SCALE: NTS

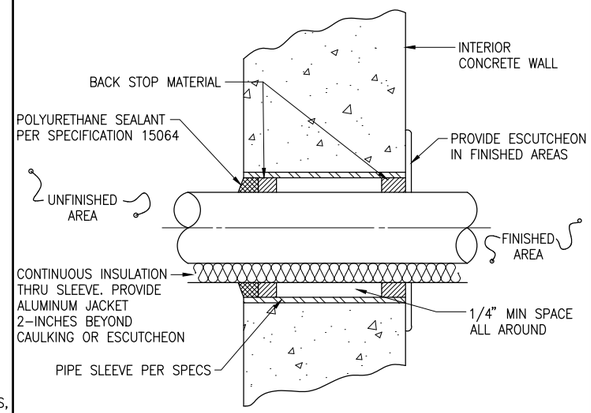

WALL PIPE PENETRATION (2 / -)

SCALE: NTS

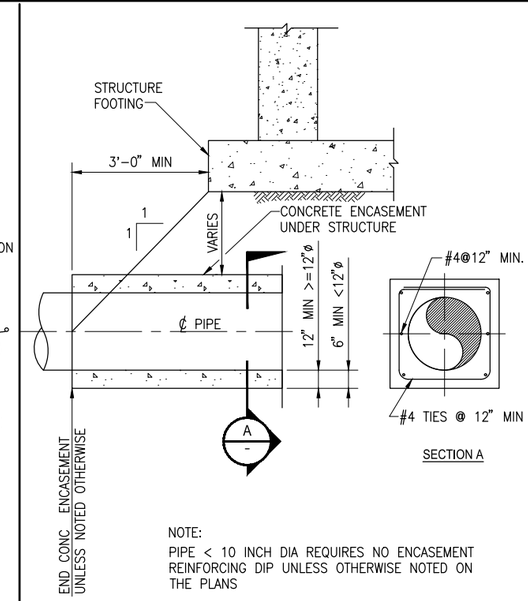

NOTE:
PIPE < 10 INCH DIA REQUIRES NO ENCASEMENT REINFORCING DIP UNLESS OTHERWISE NOTED ON THE PLANS

CONCRETE ENCASEMENT UNDER STRUCTURES (3 / -)

SCALE: NTS

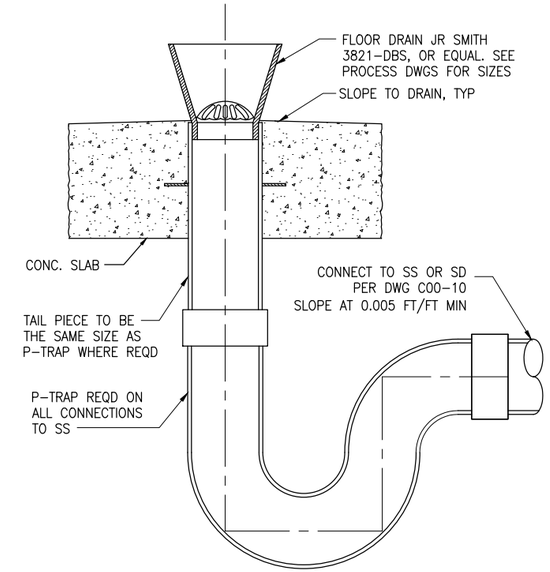

EQUIPMENT DRAIN WITH FUNNEL (4 / -)

SCALE: NTS

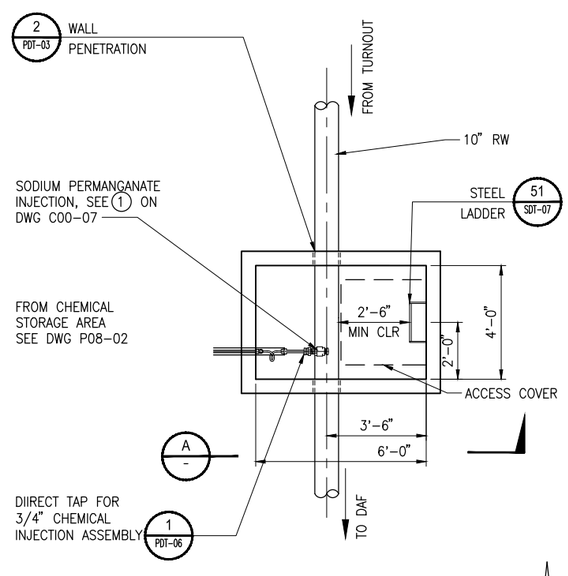

CHEMICAL INJECTION VAULT (6 / -)

SCALE: 3/8" = 1'-0"

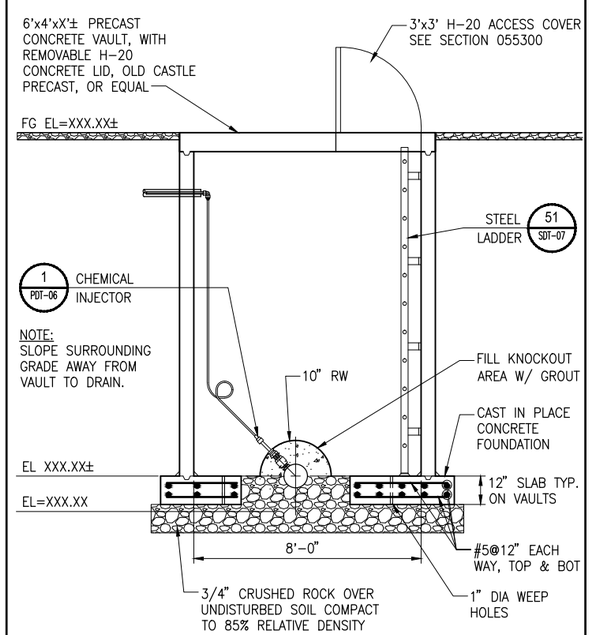

SECTION (A / -)

SCALE: 3/8" = 1'-0"

PRELIMINARY
30% SUBMITTAL

0 1/2 1
IF THIS BAR DOES NOT MEASURE 1" THEN DRAWING IS NOT TO FULL SCALE

REV	DATE	DESCRIPTION	APPR

PROJECT ENGINEER | REG NUMBER | EXP DATE

AECOM
AECOM
1194 PACIFIC STREET, SUITE 204
SAN LUIS OBISPO, CA 93401
T 805.542.9840 F 805.542.9990
www.aecom.com

CITY OF EL PASO DE ROBLES
WATER TREATMENT PLANT PROJECT

PIPE ENCASEMENT, PENETRATIONS AND FLOOR DRAIN DETAILS

DESIGNED:
DETAILED:
CHECKED:
APPROVED:
DATE: November 2012
AECOM PROJECT NO. 60264606
P.R. PROJECT NO.
CADD STDS. AECOM

PDT-03
SHEET
- OF -

DWG: V:\PASO ROBLES\60264606-WTP\000 CAD\PLANSET\3-PROCESS\PDT-03.dwg Layout Name: PAPER - Plotted by: Rodriguez, David Date: 11/28/2012 - 3:51 PM
XREFS: G-BD-PR IMAGES: CITY OF PASO LOGO_1.png -

PIPE DIA (IN)	'A'	'B'	'C'	'D'	'E'	
					MIN	MAX
2 1/2	2 1/2	3 1/2	9	1 1/2	8	13
3	2 1/2	3 3/4	9	1 1/2	8 1/4	13 1/4
3 1/2	2 1/2	4	9	1 1/2	8 1/2	13 1/2
4	3	4 1/4	9	2 1/2	9 1/4	14
5	3	4 7/8	9	2 1/2	10	14 3/4
6	3	5 1/2	9	2 1/2	10 1/2	15 1/4
8	3	6 7/8	9	2 1/2	11 3/4	16 1/2
10	3	8 1/2	9	2 1/2	13 1/2	18 1/4
12	3	9 15/16	9	2 1/2	15	19 3/4
14	4	10 15/16	11	3	16 1/4	20 3/4
16	4	12 3/8	11	3	17 3/4	22 1/4
18	6	13 7/8	13 1/2	3 1/2	19 1/2	24
20	6	15 3/8	13 1/2	3 1/2	21	25 1/2
24	6	17 15/16	13 1/2	4	23 3/4	28 1/4
30	6	21 5/16	17 1/2	4	22	26 3/4

1. PROVIDE HALF ROUND RIGID INSULATION & INSULATION PROTECTION SHIELD, SIMILAR TO GRINNELL FIG 167 OR B-LINE B-3151, WHEN PIPING IS INSULATED
2. PROVIDE NEOPRENE WAFFLE ISOLATION PAD SIMILAR TO MASON TYPE 'W' OR KORFUND KORPAD 40, UNDER SUPPORT FOOT WHEN PIPING IS ISOLATED OR SUPPORT IS ADJACENT TO MECHANICAL EQUIPMENT
3. SEE TABLE FOR BASE, HEIGHT, & FLANGE DIMENSIONS

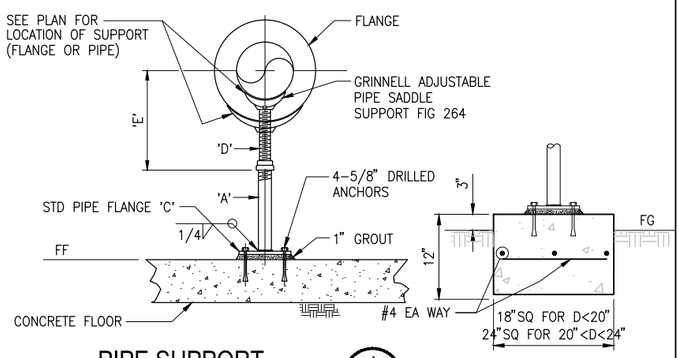

PIPE SUPPORT (1)

SCALE: NONE

CONCRETE BASE IF SUPPORT IS LOCATED OFF OF A SLAB

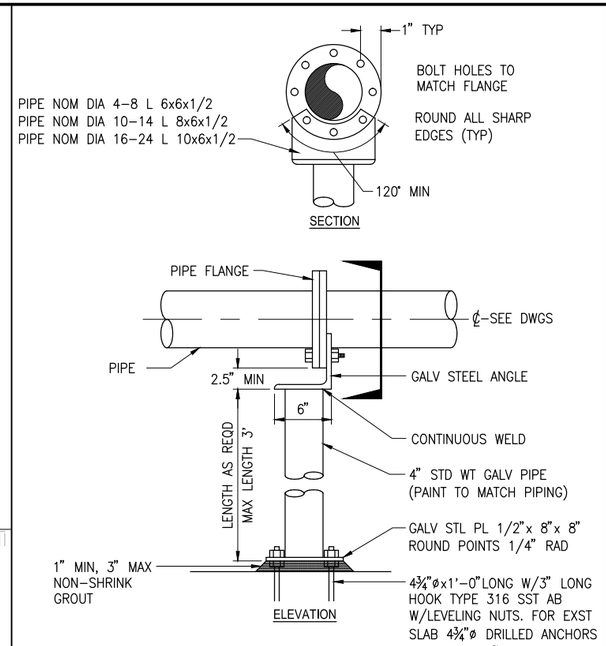

PIPE SUPPORT (2)

SCALE: NONE

PIPE HANGER DIMENSIONS

PIPE SIZE	ROD SIZE "A"	MAX. SPACING
3/8"	1/2"	4'
1 1/2"-1"	1/2"	6'
1 1/4"-2"	1/2"	6'
2 1/2"-3"	1/2"	6'

AS REQUIRED PROVIDE LATERAL BRACING

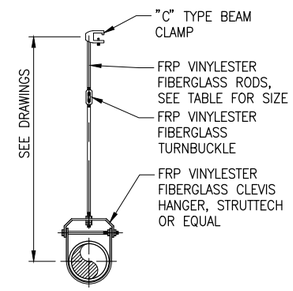

CLEVIS TYPE PIPE HANGER (3)

SCALE: N.T.S.

NOTES:
1. SEE PLANS FOR NUMBER AND MATERIAL OF PIPES
2. WHEN INSTALLING PIPES 4-INCHES AND LARGER, PROVIDE SIDE BRACKET PER DETAIL 400764-021

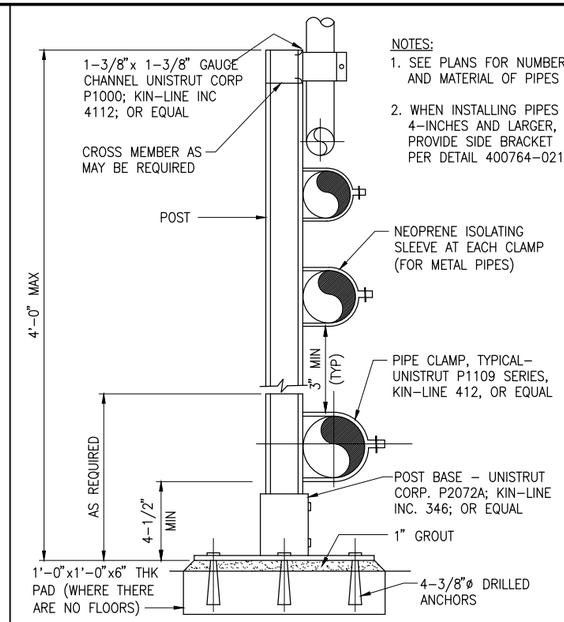

SINGLE OR STACKED POST PIPE SUPPORT (4)

SCALE: NONE

NOTES:
1. SEE PLANS FOR NUMBER AND MATERIAL OF PIPES.
2. FOR INSTALLATION REQUIRING A BRACKET LONGER THAN 18", USE UNISTRUT 2540 SERIES, KIN-LINE 323, OR EQUAL UP TO 36".

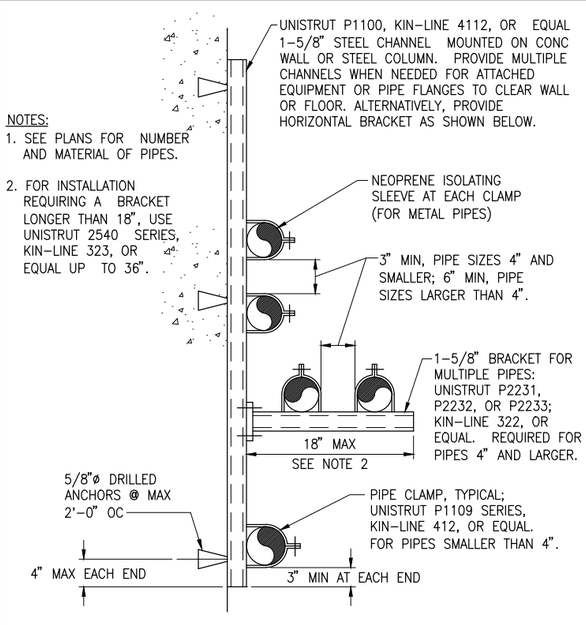

SINGLE OR STACKED WALL PIPE SUPPORT (5)

SCALE: NONE

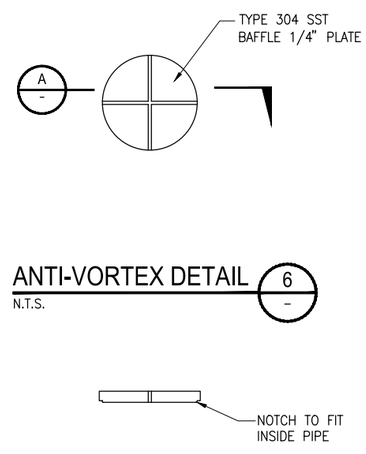

ANTI-VORTEX DETAIL (6)

N.T.S.

SECTION (A)

N.T.S.

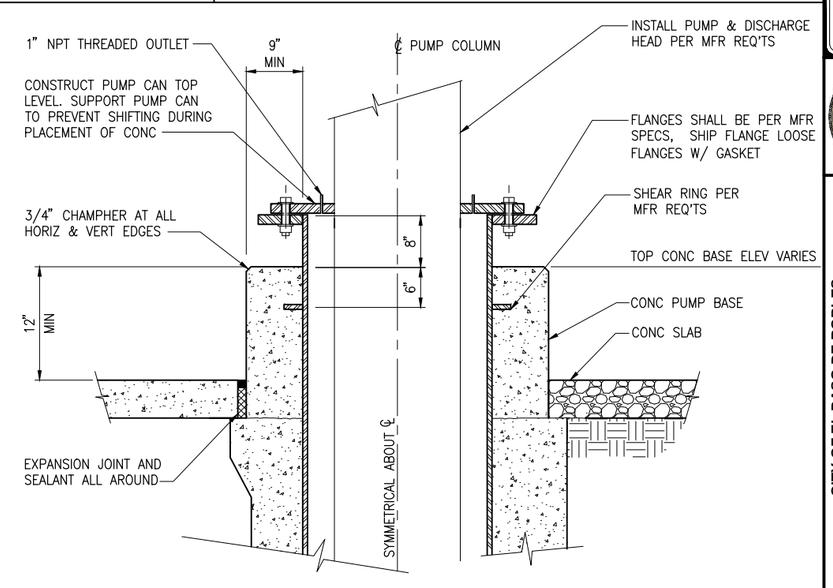

PUMP BASE DETAIL (7)

SCALE: 3/8" = 1'-0"

PRELIMINARY 30% SUBMITTAL

0 1/2 1

IF THIS BAR DOES NOT MEASURE 1" THEN DRAWING IS NOT TO FULL SCALE

REV	DATE	DESCRIPTION	APPR
1			
2			
3			
4			

PROJECT ENGINEER | REG NUMBER | EXP DATE

AECOM

AECOM
1194 PACIFIC STREET, SUITE 204
SAN LUIS OBISPO, CA 93401
T 805.542.9840 F 805.542.9990
www.aecom.com

CITY OF EL PASO DE ROBLES

CITY OF EL PASO DE ROBLES
WATER TREATMENT PLANT PROJECT

PIPE SUPPORTS AND HANGER DETAILS

DESIGNED:
DETAILED:
CHECKED:
APPROVED:
DATE: November 2012
AECOM PROJECT NO. 60264606
P.R. PROJECT NO.
CADD STDS. AECOM

PDT-04
SHEET OF -

DWG: V:\PASO ROBLES\60264606-WTP\000 CAD\PLANSET\3-PROCESS\PDT-04.dwg Layout Name: Paper - Plotted by: Rodriguez, David Date: 11/28/2012 - 3:51 PM
XREFS: C-BD-PR IMAGES: CITY OF PASO LOGO_1.png -

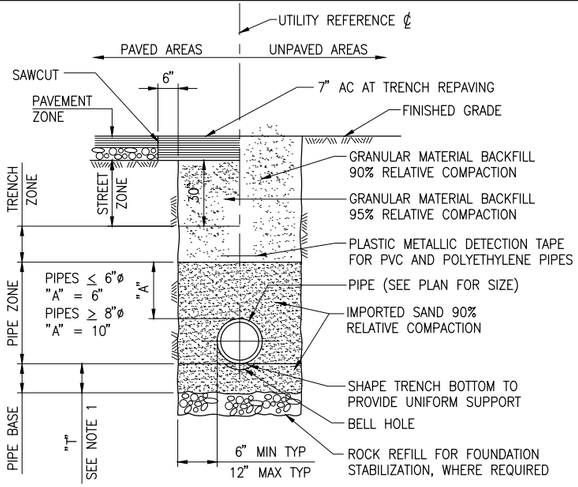

NOTES

1. FOR SIZES 18" DIAMETER AND GREATER, T=6 INCHES. FOR SIZES 16" DIAMETER AND LESS, T=4 INCHES.
2. TRENCH WALL SHOWN VERTICAL FOR CLARITY, EXCAVATE PER OSHA/STATE REQUIREMENTS.
3. USE THE SAME DETAIL FOR BUILDING SERVICES.

TRENCH (1)

SCALE: NONE

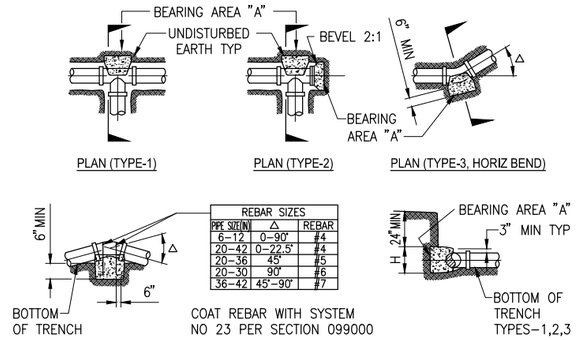

REBAR SIZES		
PIPE SIZE (IN)	Δ	REBAR
6–12	0–90°	#4
20–42	0–22.5°	#4
20–36	45°	#5
20–30	90°	#6
36–42	45°–90°	#7

COAT REBAR WITH SYSTEM NO 23 PER SECTION 099000

NOTES:

1. BASED ON OD OF PIPE AT GASKET
2. CHECK SIZE OF FITTING TO VERIFY AVAILABLE AREA FOR BEARING ON CONCRETE
3. DO NOT USE THIS DETAIL WITH VERTICAL THRUST BLOCKS FOR PIPE SIZES AND BENDS NOT SHOWN IN THE TABLES
4. TEST PRESS = 150 PSI SOIL BRG PRESS = 1500 LB/SF

PIPE DIA (IN)	BEARING AREA "A" (SF) TEE OR DEAD-END	Δ=11.25°	Δ=22.5°	Δ=45°	Δ=90°	VERTICAL THRUST BLOCK VOL OF CONCRETE (CY) Δ=11.25°	Δ=22.5°	Δ=45°	Δ=90°
6	3.8	1.1	1.5	2.9	5.3	0.3	0.5	1.1	2.0
8	6.5	1.3	2.5	5.0	9.2	0.5	0.9	1.8	3.4
10	10.8	2.1	4.2	8.2	15.2	0.8	1.6	3.0	5.6
12	15.2	3.0	5.9	11.6	21.5	1.1	2.2	4.3	7.9
14	20.6	4.0	8.0	15.8	29.1	1.5	3.0	5.8	10.8
16	26.9	5.3	10.5	20.6	38.0	2.0	3.9	7.6	14.1
18	34.3	6.7	13.4	26.3	48.5	2.5	5.0	9.7	—
20	42.6	8.4	16.6	32.6	60.3	3.1	6.2	12.1	—
24	61.6	12.1	24.0	47.1	87.1	4.5	8.9	—	—

TYPICAL THRUST BLOCKS (2)

SCALE: NONE

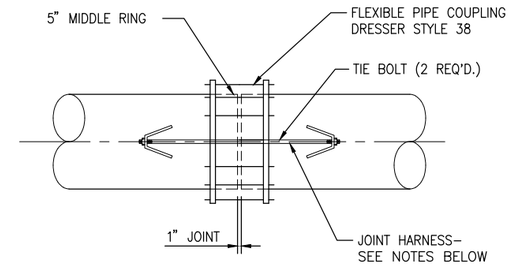

NOTES:

1. TIE ROD MATERIAL SHALL BE ASTM A–193, GRADE B7.
2. LUG MATERIAL SHALL BE ASTM 283, GRADE B, OR ASTM A–285, GRADE C.
3. NUMBER AND SIZE OF RODS SHALL BE AS SHOWN IN AWWA MANUAL M11, TABLE 13–6, FOR PIPES 18 INCHES AND LARGER.
4. DIMENSIONS OF LUGS SHALL BE AS SHOWN IN AWWA MANUAL M11, TABLE 13–7, EXCEPT MINIMUM THICKNESS SHALL BE 3/8 INCH.
5. SEE PLANS FOR PRESSURE RATING TO BE USED WITH MANUAL M11 DESCRIBED HEREIN. IF NO PRESSURE RATING IS SHOWN, USE 150 PSI.
6. PIPES 16 INCHES AND SMALLER SHALL HAVE TWO TIE RODS, SIZE AS SHOWN IN AWWA MANUAL M11, FIGURE 13–6. LUG DIMENSION SHALL BE AS SHOWN IN M11, TABLE 13–7, EXCEPT A MINIMUM THICKNESS SHALL BE 3/8 INCH.

FLEXIBLE PIPE COUPLING (3)

SCALE: NONE

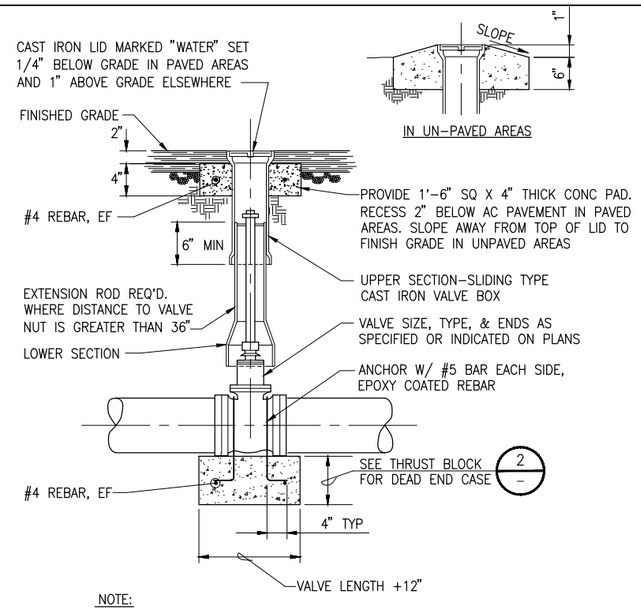

NOTE:

WHERE VALVE IS BOLTED TO A FLANGED FITTING WITH THRUST BLOCKING, #5 REBARS MAY BE OMITTED

BURIED VALVE (4)

SCALE: NONE

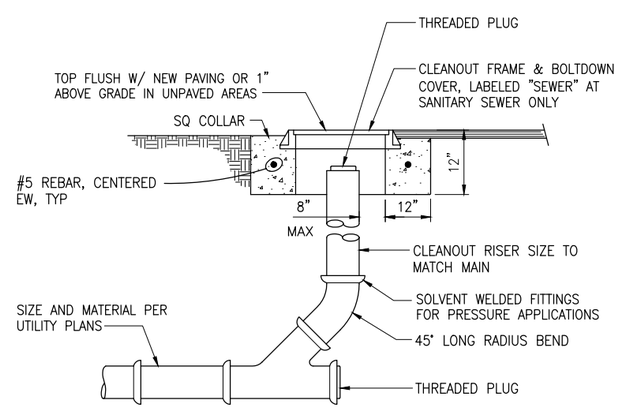

SEWER CLEANOUT (5)

SCALE: NONE

NOTE: THRUST BLOCKS SHOWN ON DETAILS 2 & 4 WILL NOT BE USED IF RESTRAINED JOINTS ARE USED ON ALL PRESSURE PIPE.

PRELIMINARY 30% SUBMITTAL

0 1/2 1
IF THIS BAR DOES NOT MEASURE 1" THEN DRAWING IS NOT TO FULL SCALE

REV	DATE	DESCRIPTION	APPR

PROJECT ENGINEER | REG NUMBER | EXP DATE

AECOM

AECOM
1194 PACIFIC STREET, SUITE 204
SAN LUIS OBISPO, CA 93401
T 805.542.9840 F 805.542.9990
www.aecom.com

CITY OF EL PASO DE ROBLES
WATER TREATMENT PLANT PROJECT

PIPING AND TRENCHING DETAILS

DESIGNED:
DETAILED:
CHECKED:
APPROVED:
DATE: November 2012
AECOM PROJECT NO. 60264606
P.R. PROJECT NO.
CADD STDS. AECOM

PDT-05
SHEET OF -

DWG: V:\PASO ROBLES\60264606-WTP\000 CAD\PLANSET\3-PROCESS\PDT-05.dwg Layout Name: Paper – Plotted by: Rodriguez, David Date: 11/28/2012 – 3:51 PM
XREFS: G-BD-PR IMAGES: CITY OF PASO LOGO_1.png –

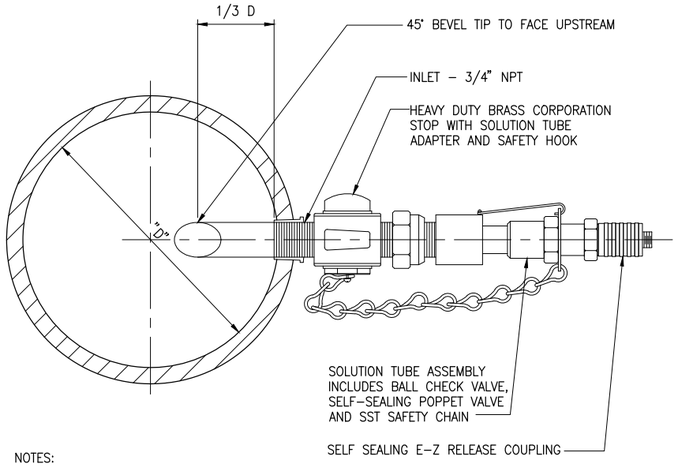

NOTES:

1. REFER TO SITE PIPING DWGS FOR "D"
2. INJECTION QUILL CONNECTION SHOWN HORIZONTAL FOR CLARITY. INSTALL AT 45° FROM VERTICAL
3. CHEMICAL INJECTION ASSEMBLIES WILL BE SAF-T-FLO MODEL EB-191, OR EQUAL.
4. SAMPLE TAPS WILL BE SAF-T-FLO MODEL EB-179 OR EQUAL.

CHEMICAL INJECTION AND SAMPLE TAP (1 / -)

SCALE: NONE

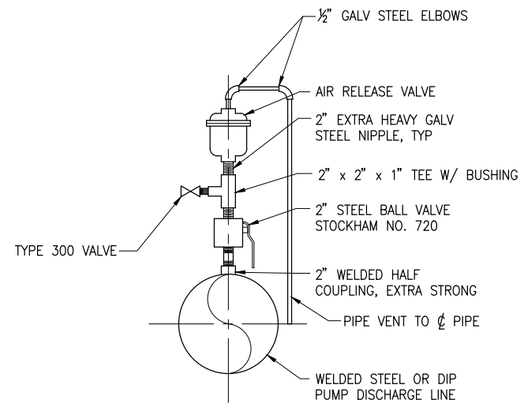

AIR RELEASE VALVE DETAIL (2 / -)

SCALE: NONE

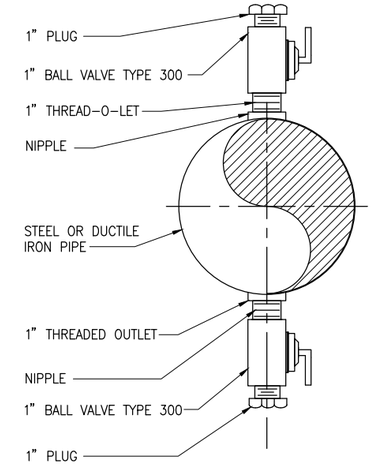

NOTE:

1. ALL PIPE AND FITTINGS SHALL BE SCH 40 BRASS

THREADED OUTLET (3 / -)

SCALE: NTS

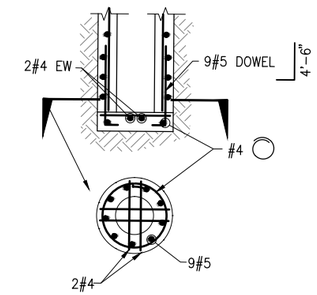

PUMP CAN REINFORCING (4 / -)

SCALE: NTS

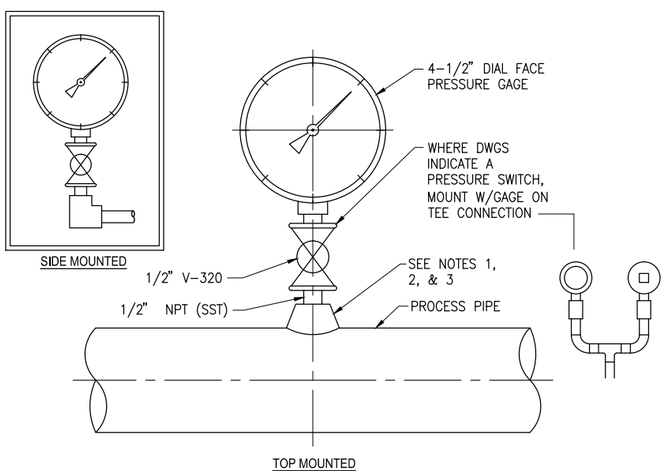

NOTES:

1. FOR STL, GALV & PVC 2-1/2" & SMALLER USE A BUSHING IN A TEE
2. FOR DI & FRP ALL SIZES, USE PIPE SADDLE W/BUSHING
3. FOR STL & SST PIPES 3" & LARGER, & PRESSURE VESSELS, USE THRED-O-LET AS SHOWN
4. PROVIDE SNUBBER FOR POSITIVE DISPLACEMENT PUMP INSTALLATIONS

PRESSURE GAUGE MOUNTING (5 / -)

SCALE: NONE

NOTES:

1. PLACE NON-INSULATED SIDE OF BOLT TOWARD VALVE
2. DO NOT APPLY METALLIC OR OTHER NON-INSULATING PAINTS TO INSULATING PARTS OR FLANGES
3. INSULATING SLEEVE TO BE 1/64" SHORTER THAN DISTANCE BETWEEN STEEL WASHERS WHEN BOLT IS FULLY TIGHTENED
4. COAT WITH COLD APPLIED COAL TAR MASTIC AFTER ASSEMBLING JOINT AND WRAP WITH A BUTYL RUBBER ADHESIVE, POLYETHLENE BACKED TAPE

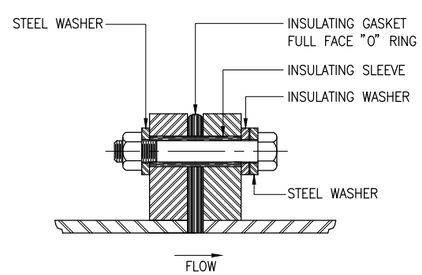

INSULATED FLANGE (6 / -)

SCALE: NONE

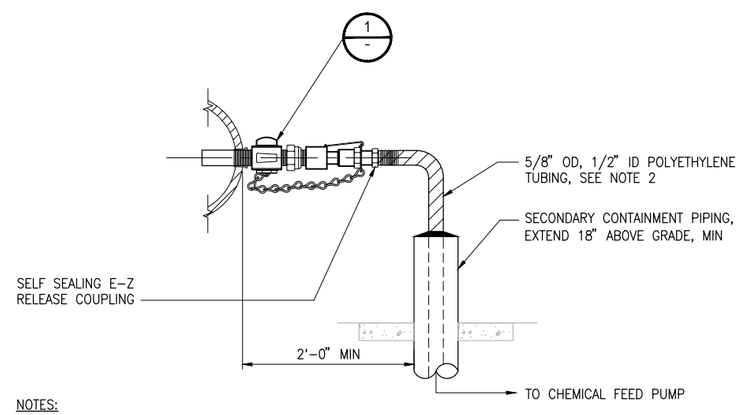

NOTES:

1. AT SAMPLING LOCATIONS INSTALL CHAMFERED SAMPLING TUBE WITH OPENING FACING UPSTREAM.
2. TRANSITION FROM SECONDARY CONTAINED PIPING TO PE TUBING. PROVIDE SUFFICIENT EXTRA TUBING LENGTH TO ALLOW FOR REMOVAL OF SOLUTION TUBE ASSEMBLY.

CHEMICAL FEED/SAMPLING CONNECTION (7 / -)

SCALE: NOT TO SCALE

PRELIMINARY 30% SUBMITTAL

0 1/2 1

IF THIS BAR DOES NOT MEASURE 1" THEN DRAWING IS NOT TO FULL SCALE

REV	DATE	DESCRIPTION	APPR
1			
2			
3			
4			

PROJECT ENGINEER | REG NUMBER | EXP DATE

AECOM
AECOM
1194 PACIFIC STREET, SUITE 204
SAN LUIS OBISPO, CA 93401
T 805.542.9840 F 805.542.9990
www.aecom.com

CITY OF EL PASO DE ROBLES
WATER TREATMENT PLANT PROJECT

MISCELLANEOUS DETAILS

DESIGNED:
DETAILED:
CHECKED:
APPROVED:
DATE: November 2012
AECOM PROJECT NO. 60264606
P.R. PROJECT NO.
CADD STDS. AECOM

PDT-06
SHEET OF -

DWG: V:\PASO ROBLES\60264606-WTP\000 CAD\PLANSET\3-PROCESS\PDT-06.dwg Layout Name: Paper – Plotted by: Rodriguez, David Date: 11/28/2012 – 3:51 PM
XREFS: G-BD-PR IMAGES: CITY OF PASO LOGO_1.png –

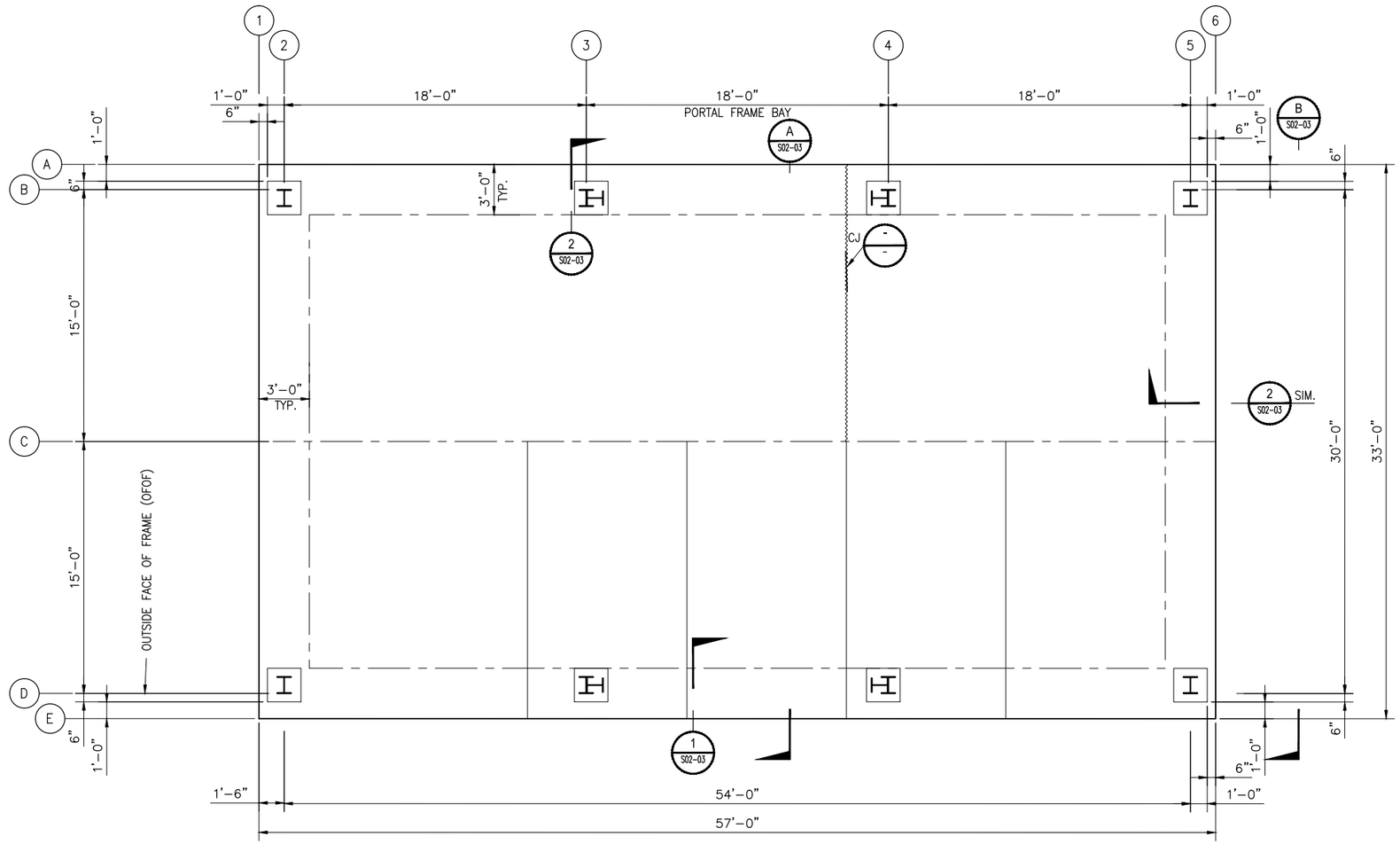

DAF FOUNDATION PLAN

SCALE: 1/4" = 1'-0"

1
-

PRELIMINARY
30% SUBMITTAL

0 1/2 1
IF THIS BAR DOES NOT MEASURE 1" THEN DRAWING IS NOT TO FULL SCALE

REV	DATE	DESCRIPTION	APPR
1			
2			
3			
4			

PROJECT ENGINEER | REG NUMBER | EXP DATE

AECOM
AECOM
1194 PACIFIC STREET, SUITE 204
SAN LUIS OBISPO, CA 93401
T 805.542.9840 F 805.542.9990
www.aecom.com

CITY OF EL PASO DE ROBLES
INCORPORATED 1889

CITY OF EL PASO DE ROBLES
WATER TREATMENT PLANT PROJECT

DAF SYSTEM FOUNDATION PLAN

DESIGNED:
DETAILED:
CHECKED:
APPROVED:
DATE: November 2012
AECOM PROJECT NO. 60264606
P.R. PROJECT NO.
CADD STDS. AECOM

S02-01
SHEET
- OF -

DWG: V:\PASO ROBLES\60264606-WTP\000 CAD\PLANSET\4-STRUCT\S02-01.dwg Layout Name: Layout1 - Plotted by: Rodriguez, David Date: 11/28/2012 - 4:34 PM
XREFS: G-BD-PR IMAGES: CITY OF PASO LOGO_1.png -

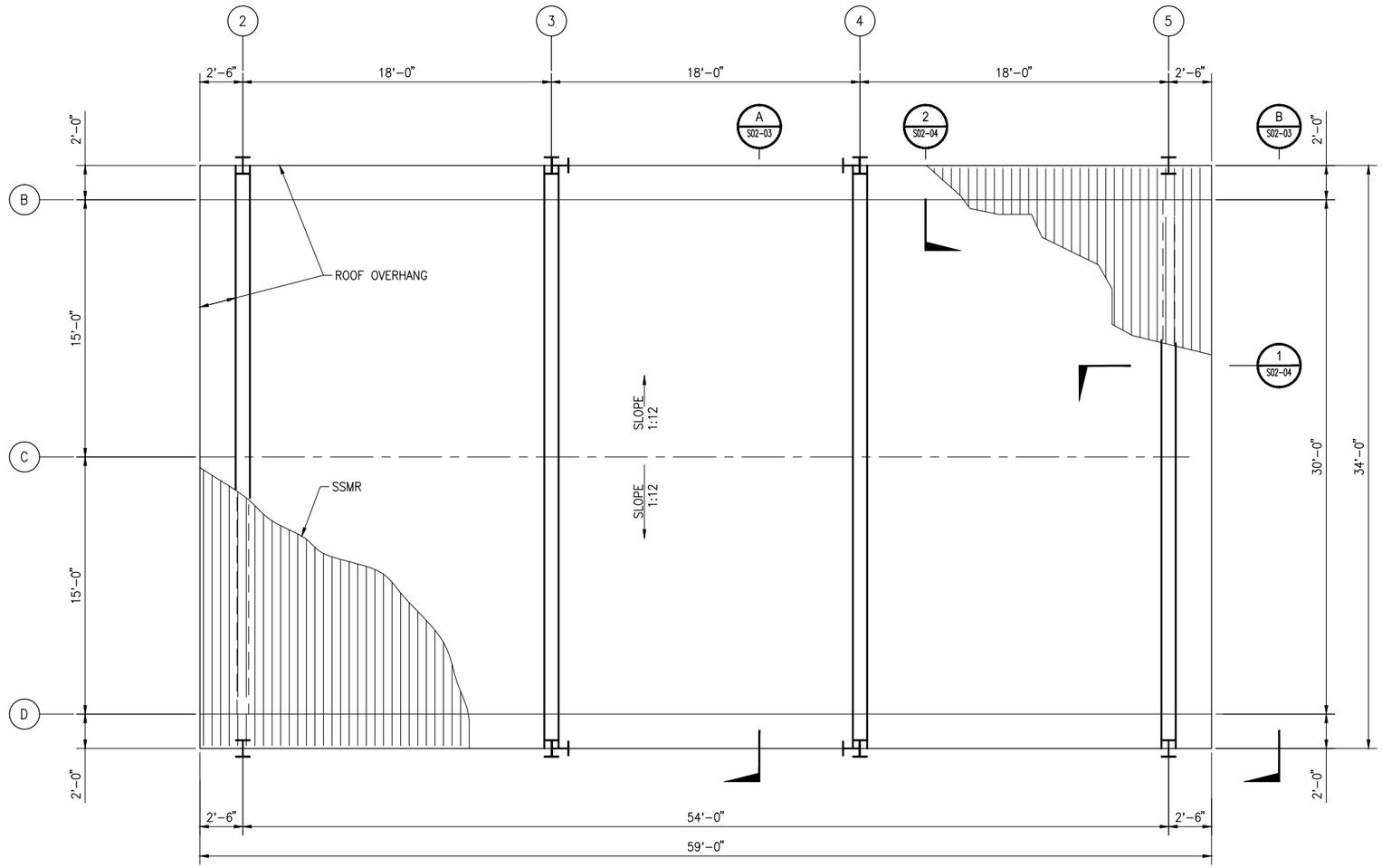

ROOF FRAMING PLAN (1)

SCALE: 1/4" = 1' - 0"

PRELIMINARY
30% SUBMITTAL

0 1/2 1
IF THIS BAR DOES NOT MEASURE 1" THEN DRAWING IS NOT TO FULL SCALE

REV	DATE	DESCRIPTION	APPR

PROJECT ENGINEER | REG NUMBER | EXP DATE

AECOM
AECOM
1194 PACIFIC STREET, SUITE 204
SAN LUIS OBISPO, CA 93401
T 805.542.9840 F 805.542.9990
www.aecom.com

CITY OF EL PASO DE ROBLES
WATER TREATMENT PLANT PROJECT

DAF SYSTEM ROOF FRAMING PLAN

DESIGNED:
DETAILED:
CHECKED:
APPROVED:
DATE: November 2012
AECOM PROJECT NO. 60264606
P.R. PROJECT NO.
CADD STDS. AECOM

S02-02
SHEET
- OF -

DWG: V:\PASO ROBLES\60264606-WTP\000 CAD\PLANSET\4-STRUCT\S02-02.dwg Layout Name: Boyle - Plotted by: Rodriguez, David Date: 11/28/2012 - 4:34 PM
XREFS: G-BD-PR IMAGES: CITY OF PASO LOGO_1.png -

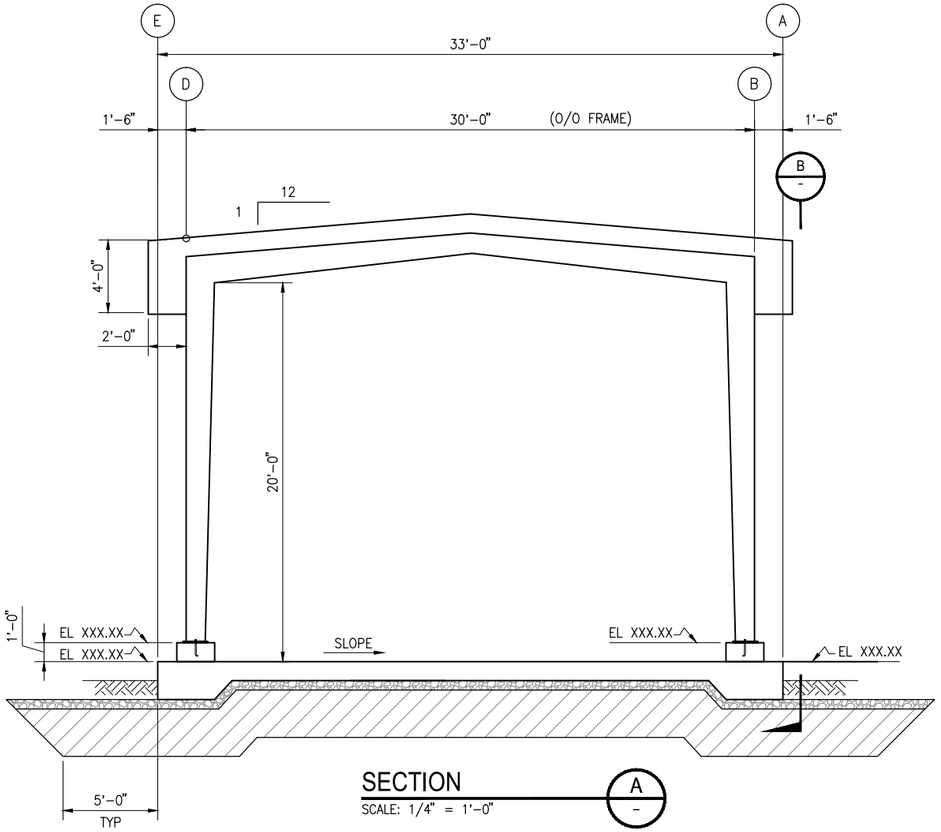

SECTION A

SCALE: 1/4" = 1'-0"

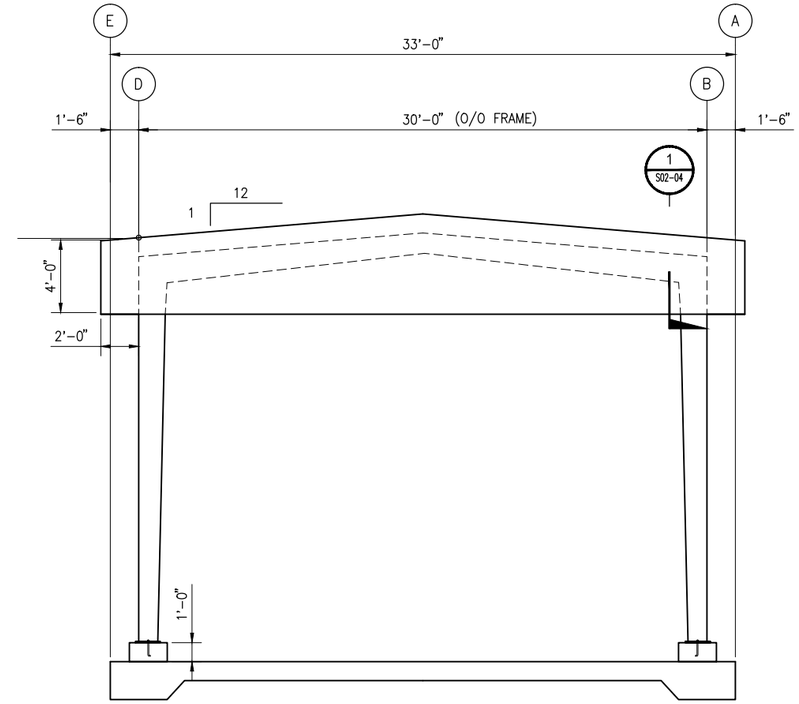

ELEVATION B

SCALE: 1/4" = 1'-0"

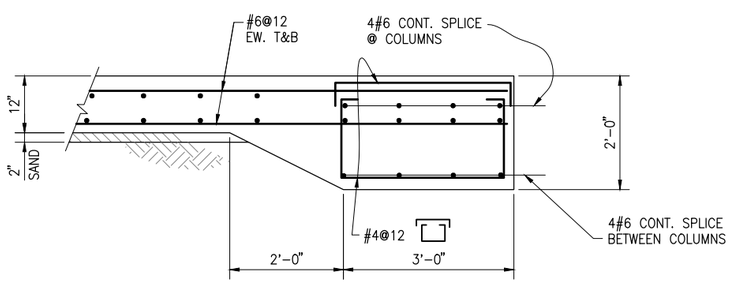

FOOTING DETAIL 1

SCALE: 3/4" = 1' - 0"

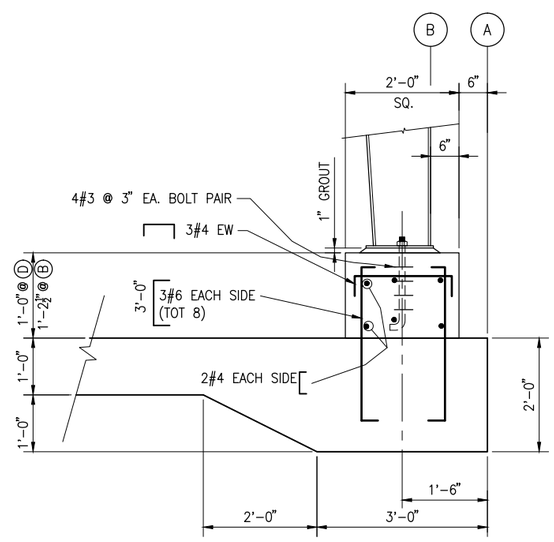

FOOTING DETAIL 2

SCALE: 3/4" = 1' - 0"

PRELIMINARY
30% SUBMITTAL

0 1/2 1
IF THIS BAR DOES NOT MEASURE 1" THEN DRAWING IS NOT TO FULL SCALE

REV	DATE	DESCRIPTION	APPR

PROJECT ENGINEER | REG NUMBER | EXP DATE

AECOM
AECOM
1194 PACIFIC STREET, SUITE 204
SAN LUIS OBISPO, CA 93401
T 805.542.9840 F 805.542.9990
www.aecom.com

CITY OF EL PASO DE ROBLES
INCORPORATED 1889

CITY OF EL PASO DE ROBLES
WATER TREATMENT PLANT PROJECT

DAF SYSTEM BUILDING SECTIONS

DESIGNED:
DETAILED:
CHECKED:
APPROVED:
DATE: November 2012
AECOM PROJECT NO. 60264606
P.R. PROJECT NO.
CADD STDS. AECOM

S02-03
SHEET
- OF -

DWG: V:\PASO ROBLES\60264606-WTP\000 CAD\PLANSET\4-STRUCT\S02-03.dwg Layout Name: Boyle (2) - Plotted by: Rodriguez, David Date: 11/28/2012 - 4:34 PM
XREFS: C-BD-PR IMAGES: CITY OF PASO LOGO_1.png -

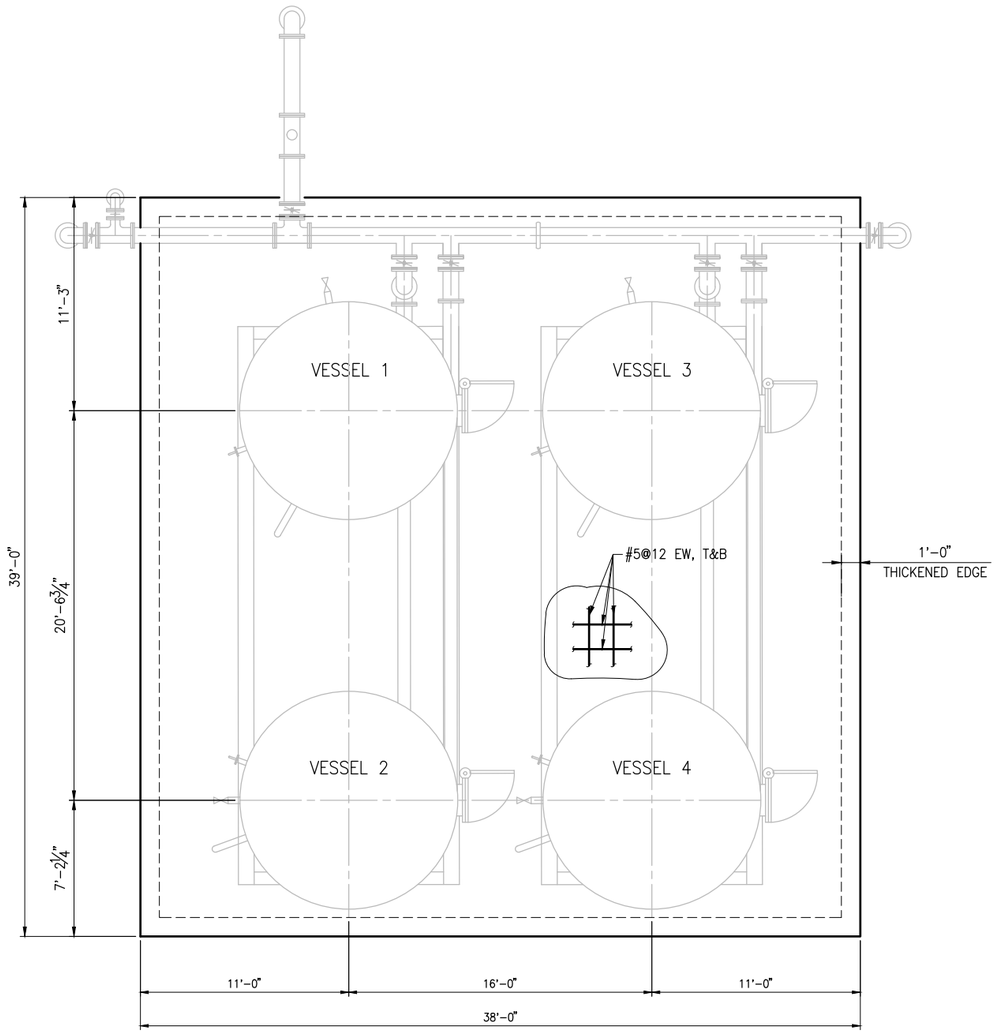

FOUNDATION PLAN

SCALE: 1/4" = 1'-0"

1 / -

NOTE:
SEE S05-02 FOR SLAB REINF.
AND VESSEL ANCHOR LAYOUT

PRELIMINARY
30% SUBMITTAL

0 1/2 1
IF THIS BAR DOES NOT MEASURE 1" THEN DRAWING IS NOT TO FULL SCALE

REV	DATE	DESCRIPTION	APPR
1			
2			
3			
4			

PROJECT ENGINEER | REG NUMBER | EXP DATE

AECOM
AECOM
1194 PACIFIC STREET, SUITE 204
SAN LUIS OBISPO, CA 93401
T 805.542.9840 F 805.542.9990
www.aecom.com

CITY OF EL PASO DE ROBLES
WATER TREATMENT PLANT PROJECT

GAC FOUNDATION PLAN

DESIGNED:
DETAILED:
CHECKED:
APPROVED:
DATE: November 2012
AECOM PROJECT NO. 60264606
P.R. PROJECT NO.
CADD STDS. AECOM

S05-01
SHEET
- OF -

DWG: V:\PASO ROBLES\60264606-WTP\000 CAD\PLANSET\4-STRUCT\S05-01.dwg Layout Name: Layout1 - Plotted by: Rodriguez, David Date: 11/28/2012 - 4:34 PM
XREFS: G-BD-PR - C-LP-PR - S-RP-06 - D-FP-CHEM-PIPING - S-NP-09 IMAGES: CITY OF PASO LOGO_1.png -

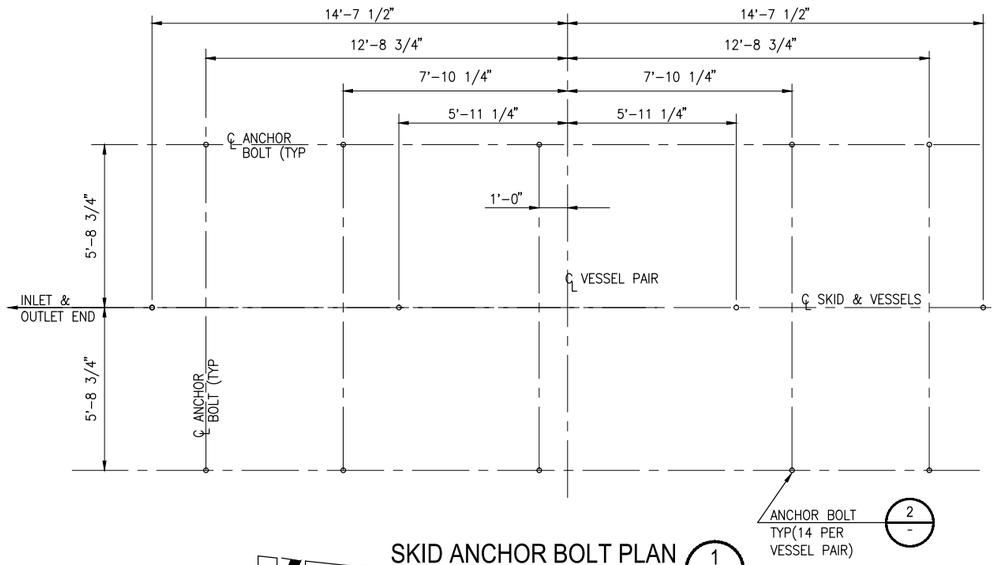

SKID ANCHOR BOLT PLAN (1 / -)

SCALE: 3/8" =1'-0"
(TYPICAL FOR EACH SKID)

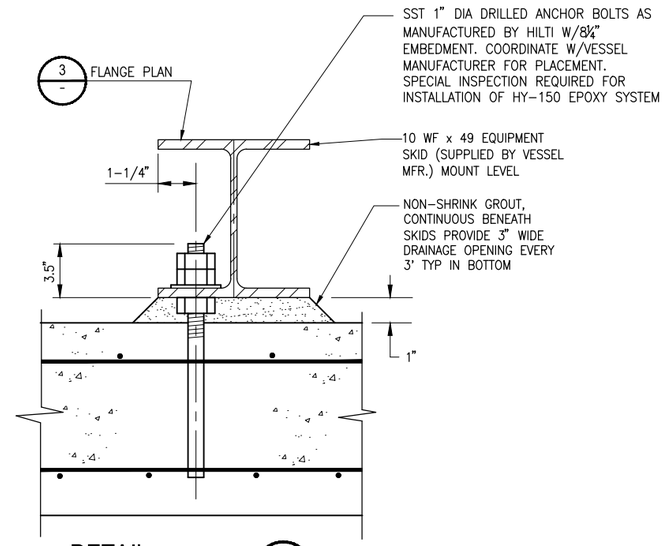

DETAIL (2 / -)

SCALE: NTS

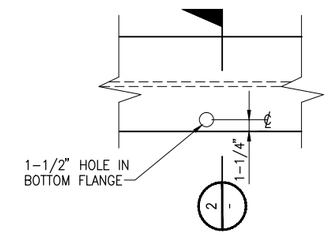

FLANGE PLAN (3 / -)

SCALE: NTS

NOTE:

1. CONTRACTOR SHALL OBTAIN LATEST MANUFACTURER'S DRAWINGS AND SHALL VERIFY LOCATIONS OF ANCHOR BOLTS. SEE DETAIL 2.
2. ONE SKID W/TWO VESSELS SHOWN,

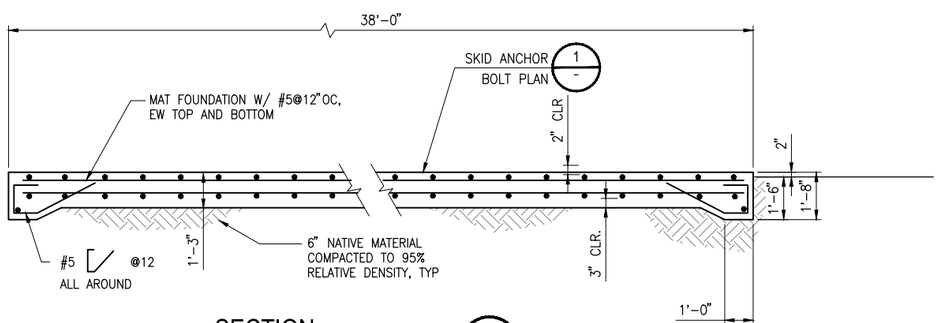

SECTION (A / -)

SCALE: NTS

PRELIMINARY
30% SUBMITTAL

0 1/2 1
IF THIS BAR DOES NOT MEASURE 1" THEN DRAWING IS NOT TO FULL SCALE

REV	DATE	DESCRIPTION	APPR

PROJECT ENGINEER | REG NUMBER | EXP DATE

AECOM
AECOM
1194 PACIFIC STREET, SUITE 204
SAN LUIS OBISPO, CA 93401
T 805.542.9840 F 805.542.9990
www.aecom.com

CITY OF EL PASO DE ROBLES
WATER TREATMENT PLANT PROJECT

GAC SLAB STRUCTURAL DETAILS

DESIGNED:
DETAILED:
CHECKED:
APPROVED:
DATE: November 2012
AECOM PROJECT NO. 60264606
P.R. PROJECT NO.
CADD STDS. AECOM

S05-02
SHEET
- OF -

DWG: V:\PASO ROBLES\60264606-WTP\000 CAD\PLANSET\4-STRUCT\S05-02.dwg Layout Name: Layout1 - Plotted by: Rodriguez, David Date: 11/28/2012 - 4:34 PM
XREFS: C-BD-PR IMAGES: CITY OF PASO LOGO_1.png -

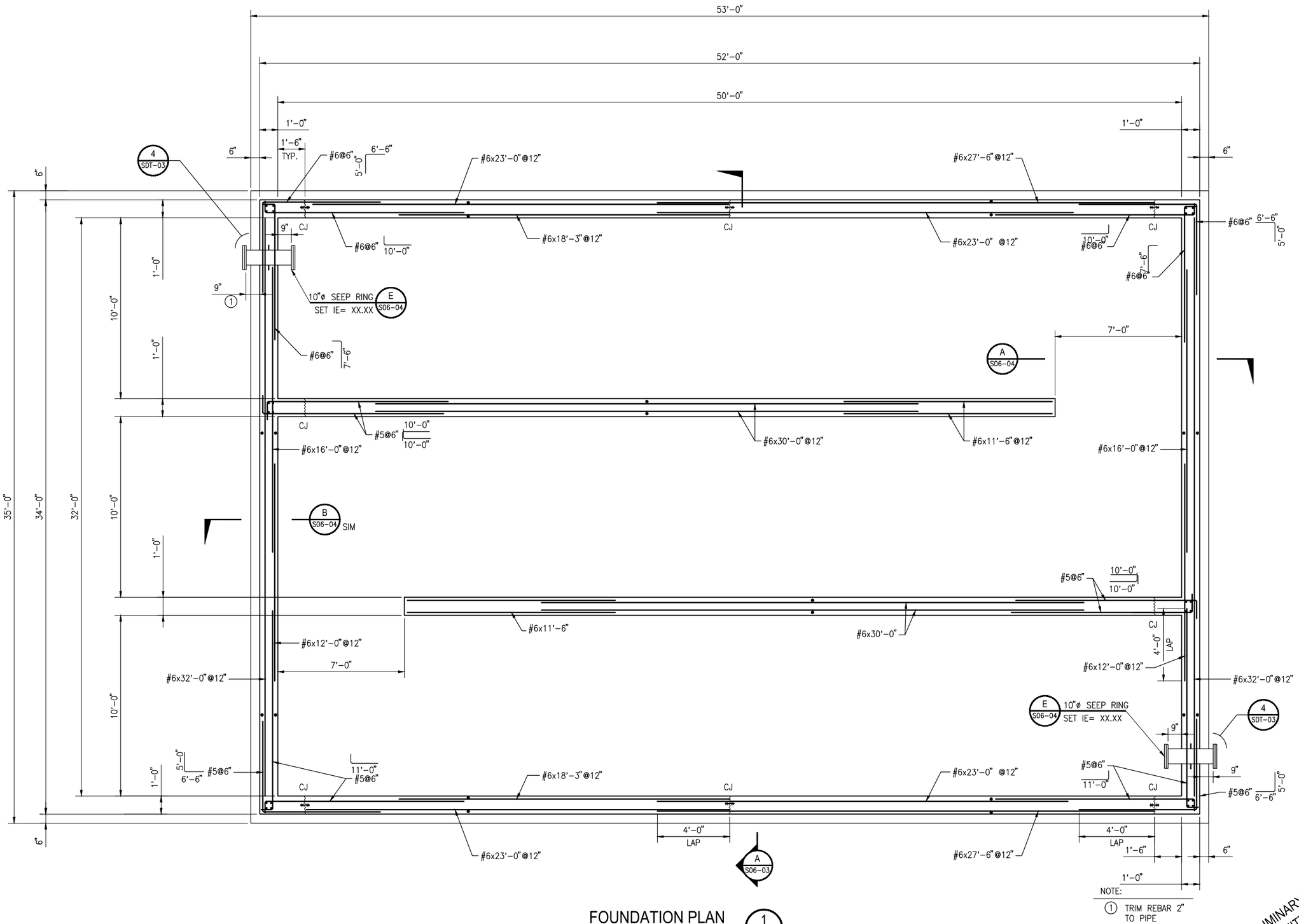

FOUNDATION PLAN

SCALE: 3/8" = 1' - 0"

1 / -

PRELIMINARY 30% SUBMITTAL

0 1/2 1

IF THIS BAR DOES NOT MEASURE 1" THEN DRAWING IS NOT TO FULL SCALE

REV	DATE	PROJECT ENGINEER	DESCRIPTION	REG NUMBER	EXP DATE	APPR
1						
2						
3						
4						

AECOM

AECOM
1194 PACIFIC STREET, SUITE 204
SAN LUIS OBISPO, CA 93401
T 805.542.9940 F 805.542.9990
www.aecom.com

CITY OF EL PASO DE ROBLES
WATER TREATMENT PLANT PROJECT

FOUNDATION PLAN,

DESIGNED:
DETAILED:
CHECKED:
APPROVED:
DATE: November 2012
AECOM PROJECT NO. 60264606
P.R. PROJECT NO.
CADD STDS. AECOM

S06-01
SHEET
OF -

DWG: V:\PASO ROBLES\60264606-WTP\000 CAD\PLANSET\4-STRUCT\S06-01.dwg Layout Name: S06-01 - Plotted by: Rodriguez, David Date: 11/28/2012 - 4:34 PM
XREFS: G-BD-PR - S-NP-06 - S-RP-06 IMAGES: CITY OF PASO LOGO_1.png -

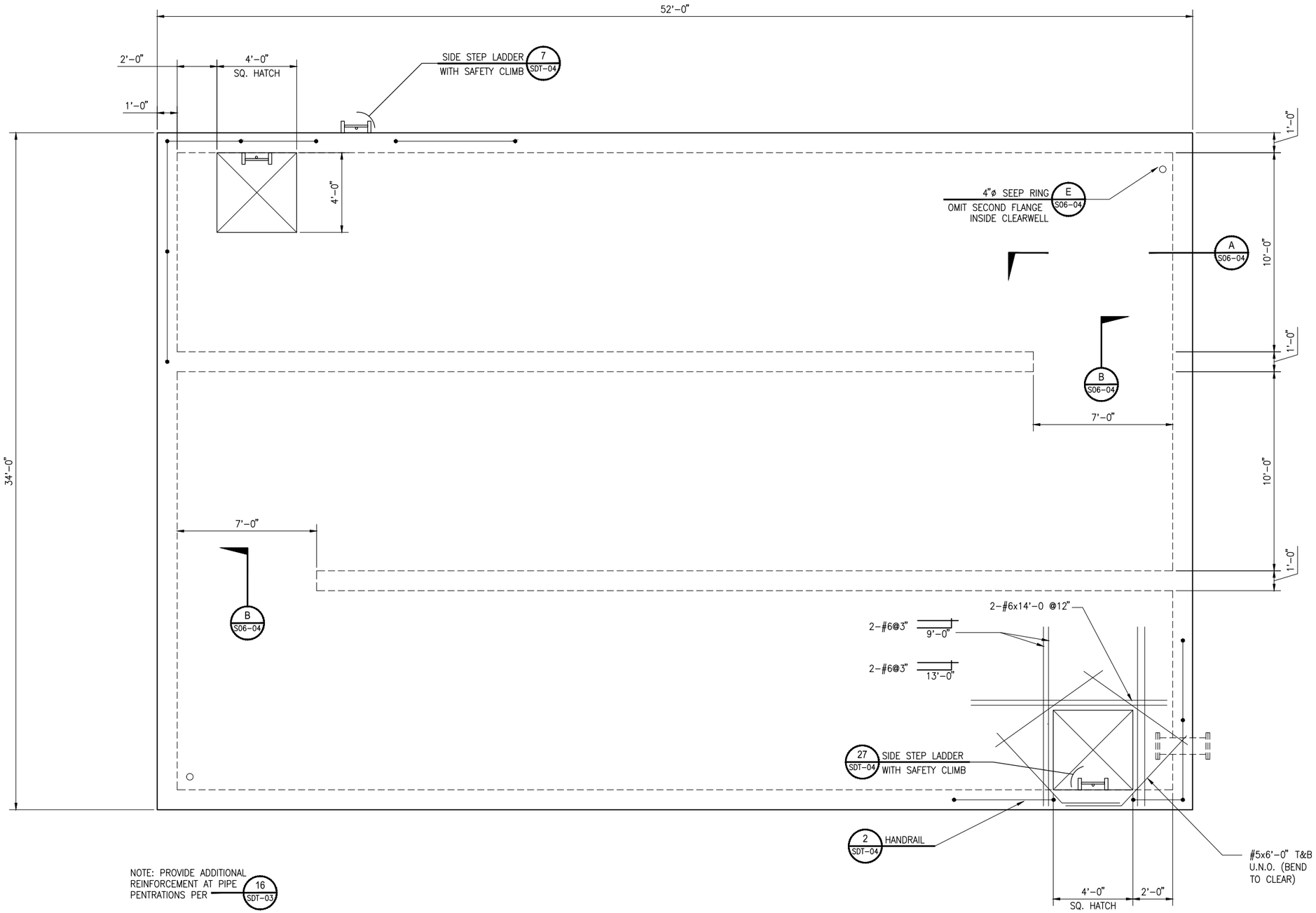

NOTE: PROVIDE ADDITIONAL REINFORCEMENT AT PIPE PENTRATIONS PER 16 SDT-03

DECK PLAN

SCALE: 3/8" = 1' - 0"

1 / -

PRELIMINARY
30% SUBMITTAL

0 1/2 1
IF THIS BAR DOES NOT MEASURE 1" THEN DRAWING IS NOT TO FULL SCALE

REV	DATE	DESCRIPTION	APPR

PROJECT ENGINEER | REG NUMBER | EXP DATE

AECOM
AECOM
1194 PACIFIC STREET, SUITE 204
SAN LUIS OBISPO, CA 93401
T 805.542.9840 F 805.542.9990
www.aecom.com

CITY OF EL PASO DE ROBLES
WATER TREATMENT PLANT PROJECT

DECK PLAN

DESIGNED:
DETAILED:
CHECKED:
APPROVED:
DATE: November 2012
AECOM PROJECT NO. 60264606
P.R. PROJECT NO.
CADD STDS. AECOM

S06-02
SHEET
OF -

DWG: V:\PASO ROBLES\60264606-WTP\000 CAD\PLANSET\4-STRUCT\S06-02.dwg Layout Name: S06-02 - Plotted by: Rodriguez, David Date: 11/28/2012 - 4:34 PM
XREFS: G-BD-PR - S-NP-06 - S-RP-06 IMAGES: CITY OF PASO LOGO_1.png -

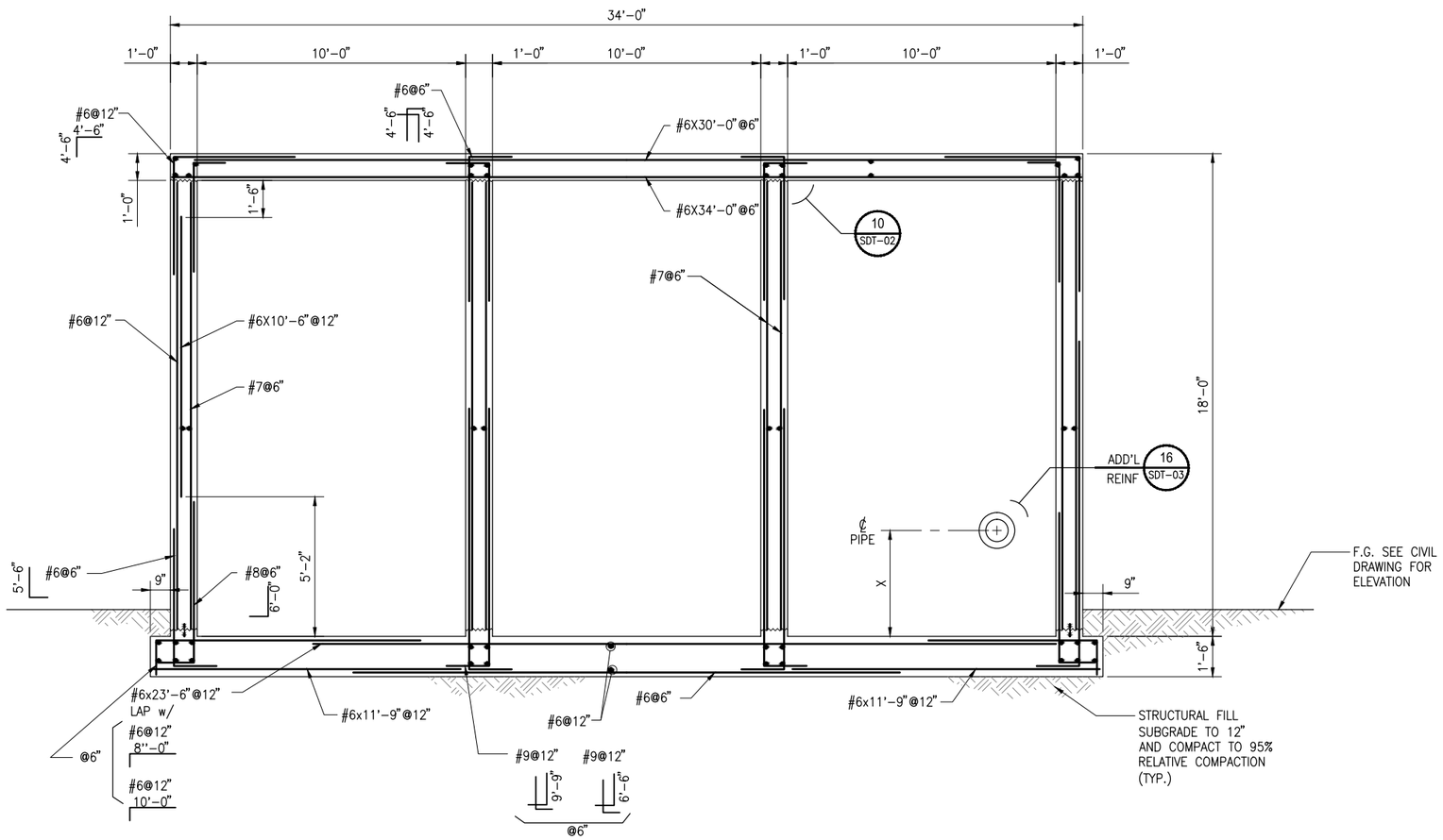

SECTION A
SCALE: 3/16" = 1' - 0"

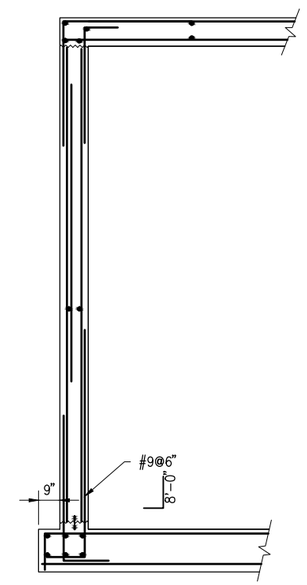

SECTION B
SCALE: 3/16" = 1' - 0"

PRELIMINARY
30% SUBMITTAL

0 1/2 1
IF THIS BAR DOES NOT MEASURE 1" THEN DRAWING IS NOT TO FULL SCALE

REV	DATE	DESCRIPTION	APPR

PROJECT ENGINEER | REG NUMBER | EXP DATE

AECOM

AECOM
1194 PACIFIC STREET, SUITE 204
SAN LUIS OBISPO, CA 93401
T 805.542.9840 F 805.542.9990
www.aecom.com

CITY OF EL PASO DE ROBLES
WATER TREATMENT PLANT PROJECT

SECTION

DESIGNED:
DETAILED:
CHECKED:
APPROVED:
DATE: November 2012
AECOM PROJECT NO. 60264606
P.R. PROJECT NO.
CADD STDS. AECOM

S06-03
SHEET
OF -

DWG: V:\PASO ROBLES\60264606-WTP\000 CAD\PLANSET\4-STRUCT\S06-03.dwg Layout Name: S06-03 - Plotted by: Rodriguez, David Date: 11/28/2012 - 4:34 PM
XREFS: G-BD-PR - S-NP-06 - S-RP-06 IMAGES: CITY OF PASO LOGO_1.png -

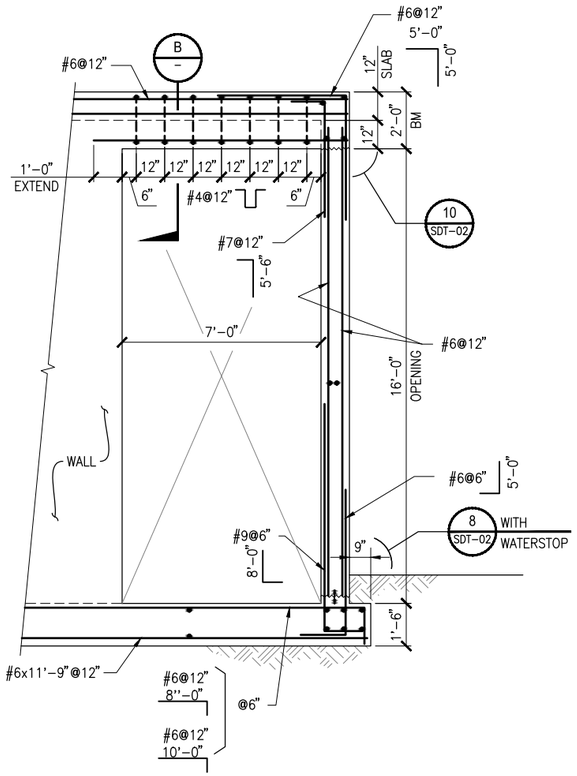

SECTION A

SCALE: 3/8" = 1' - 0"

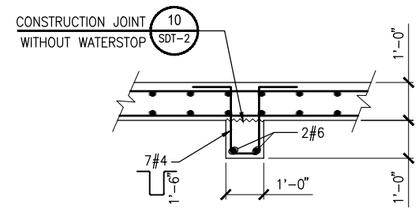

SECTION B

SCALE: 1/2" = 1' - 0"

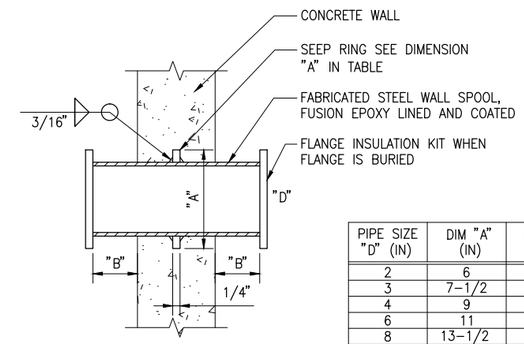

PIPE SIZE "D" (IN)	DIM "A" (IN)	DIM "B" (IN)
2	6	6
3	7-1/2	6
4	9	6
6	11	9
8	13-1/2	9
10	16	9
12	19	9

SEEP RING E

NOT TO SCALE

PRELIMINARY
30% SUBMITTAL

0 1/2 1
IF THIS BAR DOES NOT MEASURE 1" THEN DRAWING IS NOT TO FULL SCALE

REV	DATE	DESCRIPTION	APPR

PROJECT ENGINEER | REG NUMBER | EXP DATE

AECOM
AECOM
1194 PACIFIC STREET, SUITE 204
SAN LUIS OBISPO, CA 93401
T 805.542.9840 F 805.542.9990
www.aecom.com

CITY OF EL PASO DE ROBLES
WATER TREATMENT PLANT PROJECT

SECTION

DESIGNED:
DETAILED:
CHECKED:
APPROVED:
DATE: November 2012
AECOM PROJECT NO. 60264606
P.R. PROJECT NO.
CADD STDS. AECOM

S06-04
SHEET
OF -

DWG: V:\PASO ROBLES\60264606-WTP\000 CAD\PLANSET\4-STRUCT\S06-04.dwg Layout Name: S06-04 - Plotted by: Rodriguez, David Date: 11/28/2012 - 4:35 PM
XREFS: G-BD-PR - S-NP-06 - S-RP-06 IMAGES: CITY OF PASO LOGO_1.png -

CONCRETE
MASONRY
STEEL
ALUMINIUM
GRATING
CHECKERED PLATE
REINFORCING STEEL IN CONCRETE
COMPACTED BACKFILL
SELECT GRANULAR FILL MATERIAL
SAND
UNDISTURBED EARTH
DIRECTION OF GRATING BEARING BARS
HANDRAIL (PLAN)
STEEL BEAM (PLAN)
EXISTING CONCRETE
EXISTING MASONRY

STRUCTURAL LEGEND (1 / -)

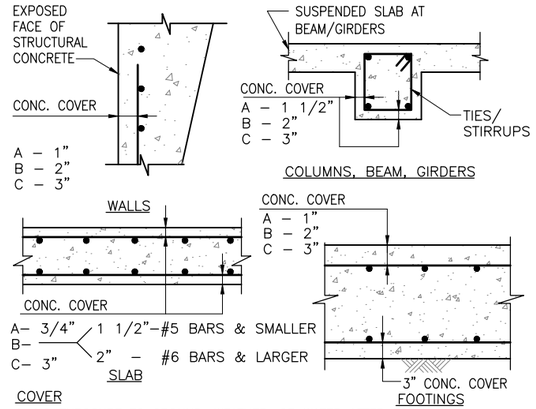

COVER

A. NO EXPOSURE TO GROUND, WEATHER, OR WATER AFTER FORM REMOVAL.*

B. EXPOSURE TO GROUND, WEATHER, OR WATER AFTER FORM REMOVAL.

C. CONCRETE PLACED AGAINST SOIL.

* USE COVER "B" WHEN EXPOSURE IS TO INTERIOR OF HYDRAULIC CONTAINED SPACES. (IE. PROCESS ROOF SLABS)

NOTE: UNLESS NOTED OTHERWISE ON STRUCTURAL DRAWINGS. COORDINATE WITH PLASTIC LINER DETAILS.
3" REBAR COVER APPLY TO WALLS WITH PLASTIC LINER.
3" REBAR COVER APPLY TO WALLS OF INFLUENT STRUCTURES.

CONCRETE COVER OVER REINFORCING STEEL (2 / -)

NOT TO SCALE

STRUCTURAL NOTES

GENERAL:

1. THE CONTRACTOR SHALL VERIFY ALL DIMENSIONS BEFORE STARTING WORK AND SHALL IMMEDIATELY NOTIFY THE OWNER'S REPRESENTATIVE OF ANY DISCREPANCIES.
2. NOTES AND DETAILS ON THE DRAWINGS SHALL TAKE PRECEDENCE OVER THE TYPICAL STRUCTURAL NOTES AND DETAILS.
3. WHERE NO CONSTRUCTION DETAILS ARE SHOWN OR NOTED FOR ANY PART OF THE WORK, DETAILS SHALL BE IN ACCORDANCE WITH THE TYPICAL DETAILS AND BEST CONSTRUCTION STANDARDS.
4. ALL CONSTRUCTION SHALL BE IN ACCORDANCE WITH THE CONSTRUCTION SPECIFICATIONS.
5. MECHANICAL, PROCESS AND ELECTRICAL EQUIPMENT SUPPORTS, ANCHORAGES, OPENINGS, RECESSES AND REVEALS NOT SHOWN ON THE STRUCTURAL DRAWINGS BUT REQUIRED BY OTHER DISCIPLINE WORK, SHALL BE PROVIDED AND INSTALLED BY THE CONTRACTOR PRIOR TO PLACING CONCRETE OR STAGED CONSTRUCTION.

DESIGN CRITERIA:

1. CALIFORNIA BUILDING CODE 2010 EDITION (CBC REVISIONS).
2. WALLS: LATERAL PRESSURES:
   ACTIVE PRESSURE: 35 PCF
   AT–REST PRESSURE: 65 PCF
3. SEISMIC DATA:
   S_{DS} = 0.817, S_{D1} =0.533, Site Class D
4. LOADING
   ROOF LL=20 PSF
   ROOF SNOW= 0 PSF
   STAIR AND WALKWAY LL=100 PSF
   WIND SPEED=85 mph, EXP. C.

ANCHOR BOLT NOTES

1. OVERHEAD ANCHORS BOLTS SHALL BE TAPPED CEILING ANCHOR BOLTS AS SHOWN ON PROCESS DRAWINGS AND TYPICAL DETAILS.
2. DRILLED ANCHORS SHALL BE ICBO SEISMIC APPROVED WEDGE ANCHORS. MANUFACTURER SHALL BE HILTI KWIK BOLT II OR EQUAL.
3. EPOXY ANCHORS SHALL BE ICBO APPROVED GROUTED EPOXY ANCHORS HILTI HSE 2421 OR EQUAL. BOLTS SHALL BE ASTM A 193.
4. ALL EQUIPMENT AND MOTORS SHALL BE ANCHORED WITH CAST–IN–PLACE ANCHOR BOLTS.

EARTHWORK AND FOUNDATIONS:

1. FOUNDATIONS SHALL BE INSTALLED IN ACCORDANCE WITH THE CONSTRUCTION DOCUMENTS.
2. REFER TO CONSTRUCTION SPECIFICATIONS FOR EARTHWORK PREPARATION, FILL AND COMPACTION.

CONCRETE:

1. CONCRETE SHALL HAVE A MINIMUM COMPRESSIVE STRENGTH F'C=4000PSI FOR ALL STRUCTURES; PAVEMENTS–F'C=3000PSI
2. TYPE II/V CEMENT.
3. REINFORCING STEEL SHALL CONFORM TO ASTM A615 OR A706, GRADE 60.
4. NO PIPES OR DUCTS SHALL BE PLACED IN CONCRETE WALLS, PIERS, SLABS, AND FOOTINGS UNLESS SPECIFICALLY DETAILED.
5. CONSTRUCTION JOINTS NOT INDICATED ON THE DRAWINGS AND REQUIRED FOR CONSTRUCTION SHALL BE KEYED AND DOWELED AS REVIEWED BY THE OWNER'S REPRESENTATIVE.
6. UNLESS OTHERWISE DETAILED, PROVIDE SPACER TIES AT 30–INCHES O.C. IN ALL BEAMS AND FOOTINGS TO MAINTAIN REINFORCING IN PLACE.
7. PROVIDE 3/4–INCH CHAMFER ON ALL EXPOSED CORNERS.
8. JOINTS IN STRUCTURES SHALL BE AS INDICATED ON THE DRAWINGS.
9. REINFORCING STEEL BAR SPLICES SHALL BE BAR–GRIP COUPLERS, ICBO RATED.
10. WATERSTOP SHALL BE PLACED AT ALL WATER BEARING SURFACE JOINTS.

STRUCTURAL STEEL:

1. MATERIAL SHALL CONFORM TO THE FOLLOWING SPECIFICATIONS;

STRUCTURAL STEEL SHAPES & PLATES	ASTM A36
PIPE	ASTM A36 GRADE B
HSS	ASTM A500, GRADE B
MACHINE BOLTS	ASTM A307
ANCHOR BOLTS	ASTM A193–OR ASTM F593,TYPE 316

2. ALL CONNECTIONS AND/OR ASSEMBLIES SHALL BE SHOP WELDED AND FIELD BOLTED UNLESS OTHERWISE INDICATED. ALL HIGH STRENGTH BOLTS SHALL BE 3/4–INCH DIAMETER BEARING TYPE CONNECTIONS (A325N) U.N.O.
3. ALL GUSSET PLATES SHALL BE 3/8–INCHES U.N.O.
4. WELDING ELECTRODES SHALL BE E–70 SERIES.
5. ALL STRUCTURAL STEEL AND CONNECTIONS BOLTS SHALL BE GALVANIZED U.N.O. SEE SPECIFICATIONS.
6. SUPPORT BARS AND ANGLES FOR ALUMINUM GRATING SHALL BE TYPE 316 CONFORMING TO ASTM A276 STAINLESS STEEL U.N.O.

TESTS AND SPECIAL INSPECTIONS

STRUCTURAL TESTS AND INSPECTIONS WILL BE PROVIDED BY THE OWNER OR DESIGNATED QUALIFIED TESTING LABORATORY CONFORMING TO THE REQUIREMENTS OF SECTION 1704 OF THE 2007 CBC.

SPECIFIED CONCRETE TESTING DURING CONSTRUCTION WILL BE PROVIDED BY THE OWNER OR DESIGNATED TESTING LABORATORY. SPECIFIED LABORATORY TEST MIXES SHALL BE THE RESPONSIBILITY OF THE CONTRACTOR.

TESTS	INSPECTIONS
☒ FILL MATERIAL	☒ GRADING, EXCAVATION, AND FILL
☒ FILL COMPACTION	☐ PILE/PIER INSTALLATION
☒ REINFORCING STEEL	☒ REINFORCEMENT PLACEMENT
☒ CONCRETE	☒ CONCRETE PLACEMENT
☐ STRUCTURAL STEEL	☐ SHOP WELDING
☐ MASONRY GROUT	☒ FIELD WELDING
☐ MASONRY	☒ HIGH STRENGTH BOLTING
☒ GROUT AND MORTAR	☐ MASONRY PLACEMENT AND
☐ EPOXY AND EXPANSION ANCHORS	☐ GROUTING
☐ SHOTCRETE	☐ EPOXY AND EXPANSION ANCHORS
	☐ SHOTCRETE
	☒ ANCHOR BOLT SIZE AND PLACEMENT

SPECIAL INSPECTION:

1. EARTHWORK AND GRADING
2. PLACEMENT OF REINFORCING
3. CONCRETE PLACEMENT
4. ANCHOR BOLTS
5. ALUMINUM AND STEEL SITE FABRICATION & WELDING

UNLESS OTHERWISE SHOWN, CONCRETE WALLS & SLABS SHALL BE REINFORCED AS FOLLOWS (MINIMUM):

#4 @ 12 E.W. CENTER OF 6" SECTIONS; #5 @ 12 E.W. CENTER OF 8" SECTION; #4 @ 12 E.W.E.F. OF 10" SECTION; #5 @ 12 E.W.E.F. OF 12" SECTION; SINGLE MAT REINFORCING SHALL BE CENTER OF SECTION UNLESS SHOWN OTHERWISE.

UNLESS NOTED OTHERWISE ALL WALL REINFORCING BARS SHALL BE CONT AROUND CORNERS & THROUGH COLUMNS OR PILASTERS. ALL REINFORCEMENT LAPS, UNLESS NOTED OTHERWISE, SHALL SATISFY THE FOLLOWING MINIMUM REQUIREMENTS:

** DETAIL OF REINFORCEMENT (LAP LENGTH) f'c = 4000 PSI								
BAR SIZE	#3 #4	#5	#6	#7	#8	#9	#10	#11
* TOP BARS	2'–8"	3'–4"	4'–0"	5'–10"	6'–8"	7'–6"	8'–4"	9'–2"
OTHER BARS	2'–1"	2'–7"	3'–2"	4'–6"	5'–2"	5'–9"	6'–5"	7'–1"

* TOP BARS SHALL BE DEFINED AS ANY HORIZONTAL BARS PLACED SUCH THAT MORE THAN 12" OF FRESH CONCRETE IS CAST IN THE MEMBER BELOW THE BARS IN ANY SINGLE POUR.

** LAP LENGTH TO BE INCREASED BY 1.5 X FOR COVER LESS THAN 1 BAR DIAMETER.

REINFORCEMENT DETAILS (3 / -)

BAR SIZE	90° HOOKS "X"
#3	6"
#4	8"
#5	10"
#6	12"
#7	14"

BAR SIZE	90° HOOKS "X"
#8	16"
#9	19"
#10	22"
#11	24"

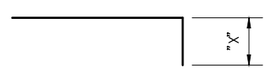

NOTE:
UNLESS NOTED OTHERWISE ON DRAWINGS ALL LENGTHS OF BAR HOOKS IN FOOTINGS, COLUMNS, WALLS AND SLABS SHALL BE GIVEN IN TABLE.

HOOK LENGTH "X" IS STANDARD 90° BAR HOOK LENGTH.

STANDARD 90° BAR HOOK (4 / -)

NOT TO SCALE

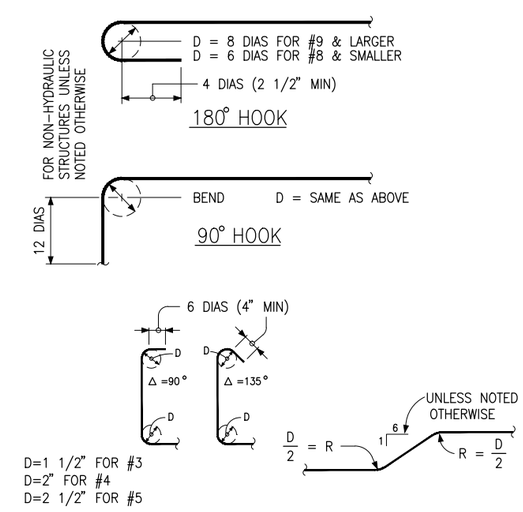

TYPICAL REINFORCING BENDS (5 / -)

NOT TO SCALE

PRELIMINARY 30% SUBMITTAL

0 1/2 1
IF THIS BAR DOES NOT MEASURE 1" THEN DRAWING IS NOT TO FULL SCALE

REV	DATE	PROJECT ENGINEER	DESCRIPTION	REG NUMBER	EXP DATE	APPR
		DAVE SCHERSCHEL		S1572	06/30/2012	

AECOM
AECOM
1194 PACIFIC STREET, SUITE 204
SAN LUIS OBISPO ,CA 93401
T 805.542.9840 F 805.542.9990
www.aecom.com

CITY OF EL PASO DE ROBLES
WATER TREATMENT PLANT PROJECT

DETAILS - 1

DESIGNED:
DETAILED: DJS
CHECKED: TYC
APPROVED:
DATE: November 2012
AECOM PROJECT NO. 60264606
P.R. PROJECT NO.
CADD STDS. AECOM

SDT-01
SHEET OF -

DWG: V:\PASO ROBLES\60264606-WTP\000 CAD\PLANSET\4-STRUCT\SDT-01.dwg Layout Name: SDT-01 - Plotted by: Rodriguez, David Date: 11/28/2012 - 4:35 PM
XREFS: C-BD-PR IMAGES: CITY OF PASO LOGO_1.png -

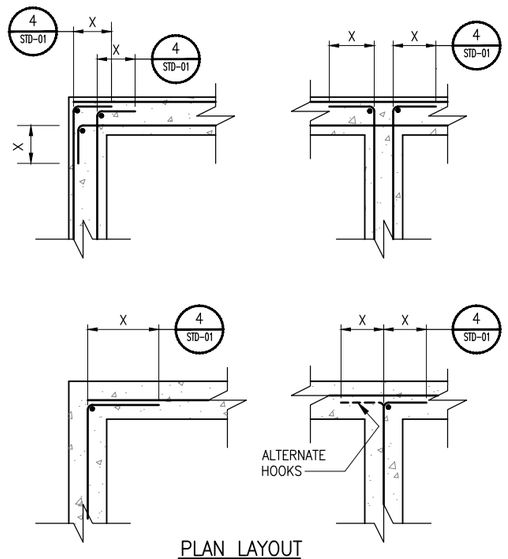

PLAN LAYOUT

HORIZONTAL REINFORCEMENT AT WALL INTERSECTION

NOT TO SCALE — 1

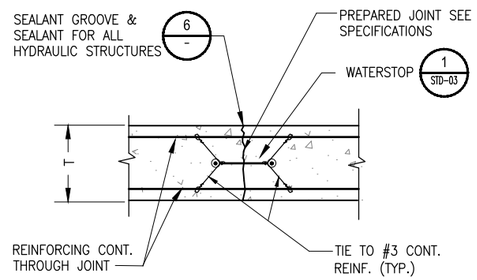

SECTION

CONSTRUCTION JOINT SLABS & FOOTINGS

WITH WATERSTOP & SEALANT — 2

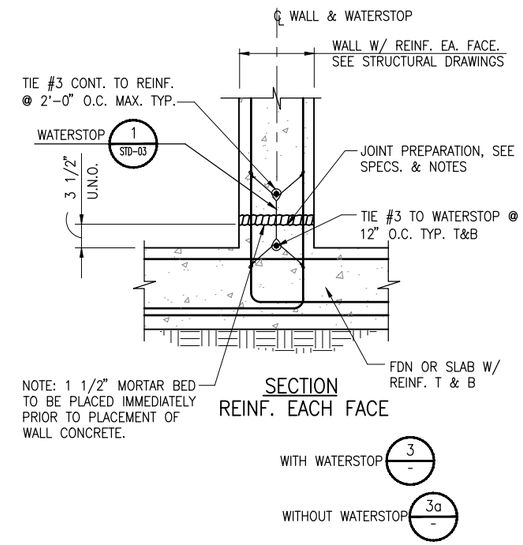

SECTION
REINF. EACH FACE

WITH WATERSTOP 3 –

WITHOUT WATERSTOP 3a –

CONSTRUCTION JOINT WALL TO FOUNDATION

WITH WATERSTOP — 3

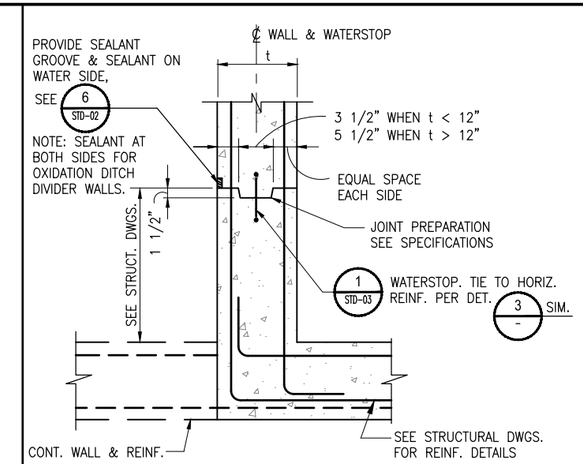

PLAN
REINF. EACH FACE

WITH WATERSTOP 4 –

WITHOUT WATERSTOP 4a –

NOTE:
OMIT SEALANT AT WALLS WITHOUT WATERSTOP.

CONSTRUCTION JOINT WALL TO WALL

NOT TO SCALE — 4

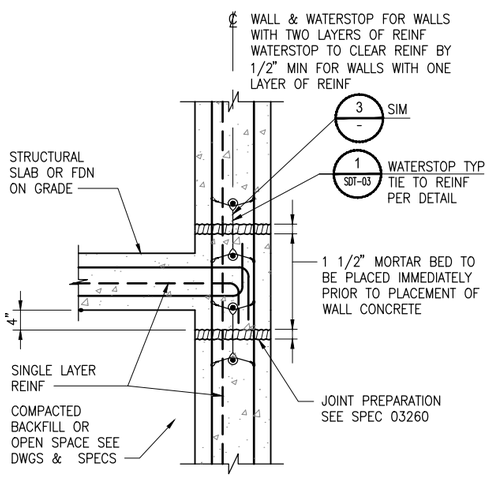

SECTION

CONSTRUCTION JOINT SLAB TO WALL

NOT TO SCALE — 5

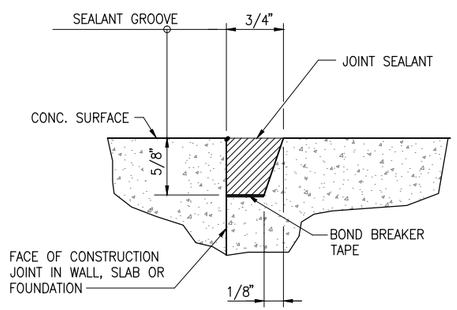

NOTE

1. SEE SPECIFICATIONS FOR SURFACE PREPARATION.
2. PRIME VERTICAL EDGES.
3. CONSTRUCTION JOINTS EXPOSED TO HYDRAULIC OR SOIL BEARING SURFACES TO HAVE GROOVE AND SEALANT. STOP GROOVE AND SEALANT 6 INCHES BELOW EXTERIOR GRADE OR AS INDICATED ON DRAWINGS.

SEALANT GROOVE CONSTRUCTION JOINTS

NOT TO SCALE — 6

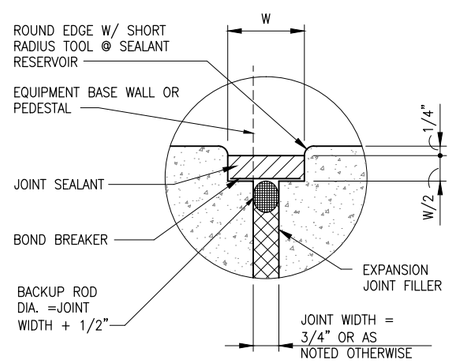

NOTE: W = 1 1/2" UNLESS NOTED OTHERWISE

EXPANSION JOINT SEALANT RESERVOIR

NOT TO SCALE — 7

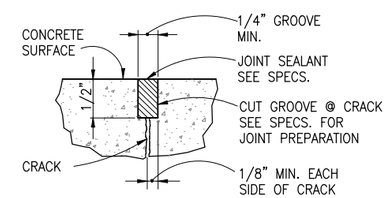

ALL CRACKS IN STRUCTURE SHALL BE REPAIRED AS INDICATED AND IN ACCORDANCE WITH THE SPECIFICATIONS.

ALTERNATE REPAIRS:

1. AS REVIEWED BY THE ENGINEER.
2. EPOXY JOINT REPAIR OR CRYSTALLINE WATERPROOFING SUBMIT MATERIALS AND APPLICATION FOR REVIEW BY THE ENGINEER.

CONCRETE CRACK REPAIR

NOT TO SCALE — 8

PRELIMINARY 30% SUBMITTAL

0 1/2 1
IF THIS BAR DOES NOT MEASURE 1" THEN DRAWING IS NOT TO FULL SCALE

REV	DATE	DESCRIPTION	APPR

PROJECT ENGINEER: DAVE SCHERSCHEL
REG NUMBER: S1572
EXP DATE: 06/30/2012

AECOM
1194 PACIFIC STREET, SUITE 204
SAN LUIS OBISPO, CA 93401
T 805.542.9840 F 805.542.9990
www.aecom.com

CITY OF EL PASO DE ROBLES
WATER TREATMENT PLANT PROJECT

DETAILS - 2

DESIGNED:
DETAILED: PJS TYG
CHECKED:
APPROVED:
DATE: November 2012
AECOM PROJECT NO. 60264606
P.R. PROJECT NO.
CADD STDS. AECOM

SDT-02
SHEET OF -

DWG: V:\PASO ROBLES\60264606-WTP\000 CAD\PLANSET\4-STRUCT\SDT-02.dwg Layout Name: SDT-02 - Plotted by: Rodriguez, David Date: 11/28/2012 - 4:35 PM
XREFS: G-BD-PR IMAGES: CITY OF PASO LOGO_1.png -

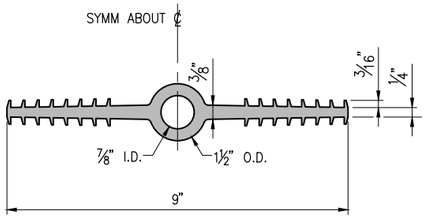

EXPANSION JOINT

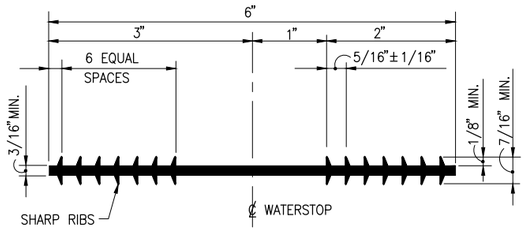

CONSTRUCTION JOINT

WATERSTOP DETAILS

NOT TO SCALE

13 / –

ADDITIONAL REINFORCING AT CIRCULAR OPENINGS NOTES:

1) NUMBER OF ADDITIONAL REINFORCING BARS EACH SIDE OF OPENING SHALL BE EQUAL TO 1/2 THE NUMBER OF INTERRUPTED BARS IN EACH LAYER OF REINFORCING.

2) SIZE OF ADDITIONAL REINFORCING BARS TO EQUAL SIZE OF INTERRUPTED REINFORCING BARS.

3) PROVIDE STD. HOOKS ON BARS IF LAP LENGTH EXTENSION CANNOT BE OBTAINED OR AT JOINTS OR OTHER OBSTRUCTIONS. PLACE ADDITIONAL BARS IN SAME PLANES AS INTERRUPTED REINF.

4) SPECIAL OPENING CONDITIONS SHALL BE AS INDICATED ON THE DRAWINGS OR AS DIRECTED BY THE OWNERS REPRESENTATIVE.

5) ALL REINFORCING TO CLEAR OPENING, PIPE OR FLANGE COLLARS BY 2".

6) WHEN THE DISTANCE BETWEEN THE O.D. OF A PIPE OR SLEEVE TO AN INTERSECTING WALL/SLAB OR ADJACENT PIPE OR SLEEVE IS LESS THAN THE SUM OF SPACES NECESSARY TO ACCOMMODATE THE REPLACEMENT REINFORCING AT THE MINIMUM SPACING:
   a. INCREASE BAR SIZE BY ONE SIZE.
   b. ADD ONLY ADDITIONAL REINFORCING NECESSARY TO MAINTAIN A MINIMUM OF 3 IN. SPACING BETWEEN ADJACENT WALL/SLAB, PIPE OR SLEEVE.

NOTES FOR ADDITIONAL REINF. AT CIRCULAR OPENINGS

14 / –

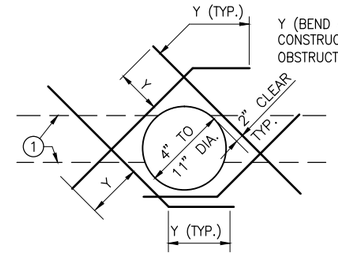

BAR SIZE	"Y" GRADE 40	"Y" GRADE 60
#4	12"	12"
#5	15"	15"
#6	18"	18"
#7	21"	24"
#8	24"	30"

1. CUT TYPICAL REINFORCEMENT AT OPENING.
2. DIAGONAL BARS TO BE PLACED :
   A. AT ℄ OF WALL OR SLAB WHERE ONE LAYER OF REINFORCEMENT IS PROVIDED.
   B. AT EACH FACE OF WALL OR SLAB WHERE TWO LAYERS OF REINFOCEMENT ARE PROVIDED.
3. UNLESS OTHERWISE NOTED, SIZE OF DIAGONAL BARS SHALL BE THE SIZE OF THE LARGEST REINFORCEMENT CUT.
4. USE THIS DETAIL FOR ALL CIRCULAR OPENINGS 4" THROUGH 11" UNLESS NOTED OTHERWISE ON THE STRUCTURAL DRAWINGS.

ADDITIONAL REINFORCEMENT AT CIRCULAR OPENINGS

NOT TO SCALE

15 / –

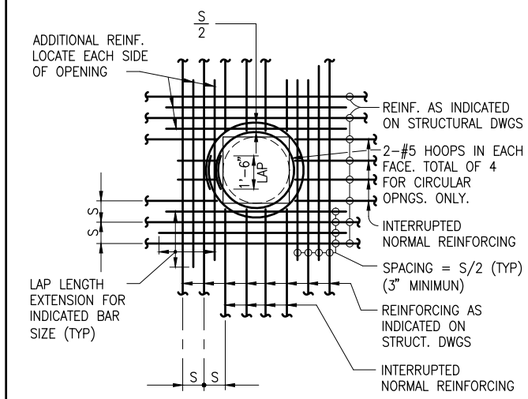

ADDITIONAL REINFORCEMENT AT OPENING 12" AND GREATER

ADDITIONAL REINFORCEMENT AT CIRCULAR OPENINGS

NOT TO SCALE

16 / –

SCHEDULE BAR EMBEDMENT LENGTH

BAR SIZE	GRADE 60 a	b	c
#4	16"	12"	20"
#5	20"	15"	26"
#6	24"	18"	31"
#7	30"	24"	39"
#8	39"	30"	51"
#9	49"	38"	65"
#10	63"	48"	82"

1. THIS DETAIL TO BE USED UNLESS NOTED OTHERWISE ON STRUCTURAL DRAWINGS.
2. ADDITIONAL REINFORCEMENT AT OPENING: AS_1 AND AS_2 = 1/2 AREA OF CUT BARS TO BE ADDED ON EACH SIDE OF OPENING.
3. ADDITIONAL REINF. AS_1 AND AS_2 TO BE PLACED:
   a) AT ℄ OF WALLS OR SLABS WHERE ONE LAYER OF REINFORCEMENT IS PROVIDED.
   b) AT EACH FACE OF WALLS OR SLABS WHERE TWO LAYERS OF REINFORCEMENT ARE PROVIDED.
4. PROVIDE DIAGONAL DOWEL FOR EACH LAYER OF REINFORCEMENT (#5 x 3'-0") U.N.O.
5. LOCATE ADDITIONAL REINF. AT 1/2 SPACE BETWEEN NORMAL BARS NOT CUT.
6. WHEN THE DISTANCE BETWEEN OPENING IN WALL OR SLAB AND INTERSECTING WALL OR SLAB IS LESS THAN THE SUM OF SPACES NECESSARY TO ACCOMMODATE THE REPLACEMENT REINFORCING AT THE MINIMUM SPACING:
   a. INCREASE BAR SIZE BY ONE SIZE.
   b. ADD ONLY ADDITIONAL REINFORCING NECESSARY TO MAINTAIN A MINIMUM OF 3 IN. SPACING BETWEEN ADJACENT WALL, SLAB, PIPE OR SLEEVE.
7. 1-#5 DIAG. BAR E.F. AT SQUARE OR RECTANGULAR OPENINGS ONLY. HOOK ONLY IF UNABLE TO OBTAIN LAP.

NOTES FOR ADDITIONAL REINF. AT RECTANGULAR OPENINGS

17 / –

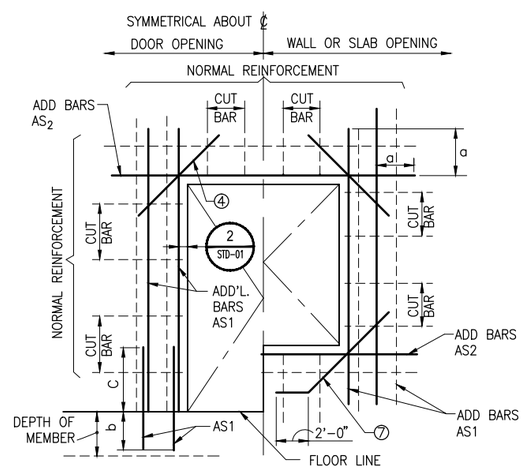

IF "b" IS GREATER THAN DEPTH OF MEMBER PROVIDE HOOKED BAR.
MINIMUM SPACING OF REINF = 3 IN.
AS = AREA OF REINF.

SEE NOTES 17 / STD-03

ELEVATION OR PLAN

ADDITIONAL REINFORCEMENT AT RECTANGULAR OPENING

NOT TO SCALE

18 / –

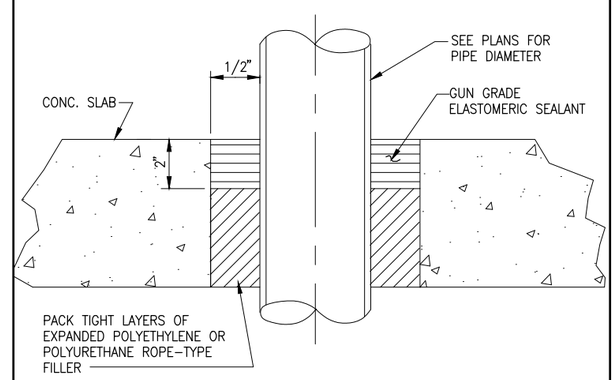

NOTE: OPENING 4" TO 11"ø SEE 15 / –
FOR ADDITIONAL REINFORCEMENT

NOTE: OPENING 12"ø OR GREATER, SEE 16 / –
FOR ADDITIONAL REINFORCEMENT

TYPICAL FLOOR PENETRATION

SCALE: NONE

19 / –

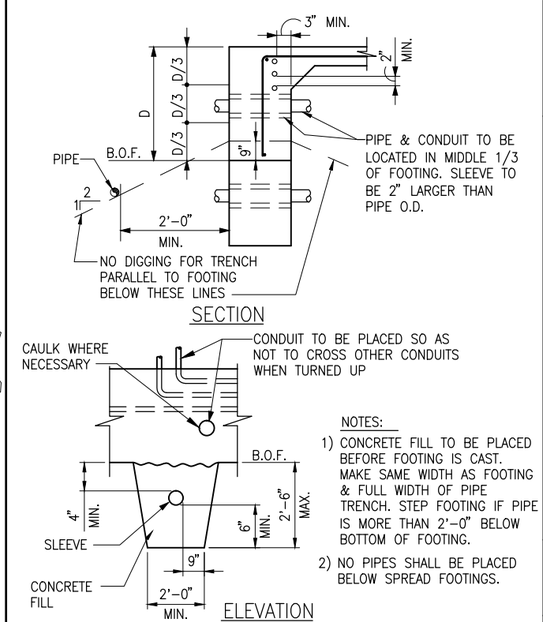

NOTES:
1) CONCRETE FILL TO BE PLACED BEFORE FOOTING IS CAST. MAKE SAME WIDTH AS FOOTING & FULL WIDTH OF PIPE TRENCH. STEP FOOTING IF PIPE IS MORE THAN 2'-0" BELOW BOTTOM OF FOOTING.
2) NO PIPES SHALL BE PLACED BELOW SPREAD FOOTINGS.

PIPE & CONDUIT PENETRATIONS AT CONCRETE FOOTINGS

NOT TO SCALE

20 / –

PRELIMINARY 30% SUBMITTAL

0 1/2 1
IF THIS BAR DOES NOT MEASURE 1" THEN DRAWING IS NOT TO FULL SCALE

REV	DATE	DESCRIPTION	APPR

PROJECT ENGINEER: DAVE SCHERSCHEL
REG NUMBER: S1572
EXP DATE: 09/30/2012

AECOM
1194 PACIFIC STREET, SUITE 204
SAN LUIS OBISPO, CA 93401
T 805.542.9840 F 805.542.9990
www.aecom.com

CITY OF EL PASO DE ROBLES
WATER TREATMENT PLANT PROJECT

DETAILS - 3

DESIGNED: DJS
DETAILED: TYG
CHECKED:
APPROVED:
DATE: November 2012
AECOM PROJECT NO. 60264606
P.R. PROJECT NO.
CADD STDS. AECOM

SDT-03
SHEET OF -

DWG: V:\PASO ROBLES\60264606-WTP\000 CAD\PLANSET\1-STRUCT\SDT-03.dwg Layout Name: SDT-03 - Plotted by: Rodriguez, David Date: 11/28/2012 - 4:35 PM
XREFS: C-BD-PR IMAGES: CITY OF PASO LOGO_1.png -

1. ALL HANDRAILS SHALL BE FIXED UNLESS NOTED OTHERWISE.
2. ALL HANDRAILS, KICKPLATES, & APPURTENANCES SHALL BE ALUMINUM, U.N.O.
3. ALL HANDRAILS SHALL BE IN ACCORDANCE WITH SAFETY CODE REQUIREMENTS.
4. PLACE CENTER OF HANDRAIL/POST ANCHOR 6" FROM EDGE OF CONCRETE UNLESS NOTED OTHERWISE.
5. HANDRAIL ALONG WALLS SHALL BE SINGLE RAIL (WHEN NOTED ON DWGS) W/ HEIGHT TO MATCH TOP RAIL ON OPPOSITE SIDE.
6. STAIR RAILS ALONG WALLS SHALL BE FASTENED WITH STANDARD WALL BRACKETS PER HANDRAIL MFR. AT 5'-0" O.C. MAXIMUM. END OR RAILS SHALL HAVE CLOSURES.
7. PROVIDE C4x2.331 KICKPLATE WHEN NOTED ON DWGS. KICKPLATE MATERIAL SHALL BE SAME AS HANDRAIL. FASTEN TO H.R. POST W/2-3/8ø SST MACHINE BOLTS. PROVIDE SLIP ASSEMBLY AT ALL EXPANSION JOINTS & AS REQUIRED AT MIDWAY BETWEEN POST. SEE DETAIL 24 / STD-04
8. PROVIDE 2-#3ø x 2'-6" REINFORCING BARS ADJACENT TO EVERY CAST-IN-PLACE POST SUPPORT IF LONGITUDINAL REINFORCING DOES NOT PASS BETWEEN POST POCKET AND EDGE OF CONCRETE.
9. PROVIDE 3/4" EXPANSION JOINTS PER EVERY 50 LINEAL FT. OF HANDRAIL & AT EXPANSION JOINTS IN STRUCTURES.
10. COAT ALL SURFACES OF ALUMINUM THAT COME IN CONTACT WITH STEEL & CONCRETE PER SPEC SECTION 099000 SYSTEM 54.

HANDRAIL NOTES (21 / -)

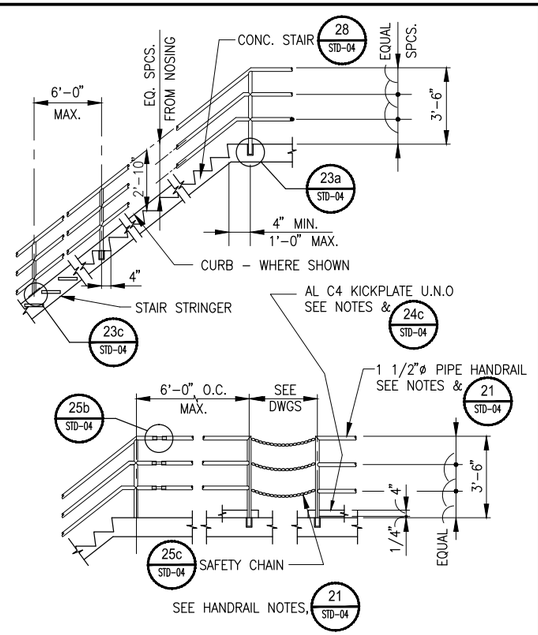

HANDRAILS (22 / -)
NOT TO SCALE

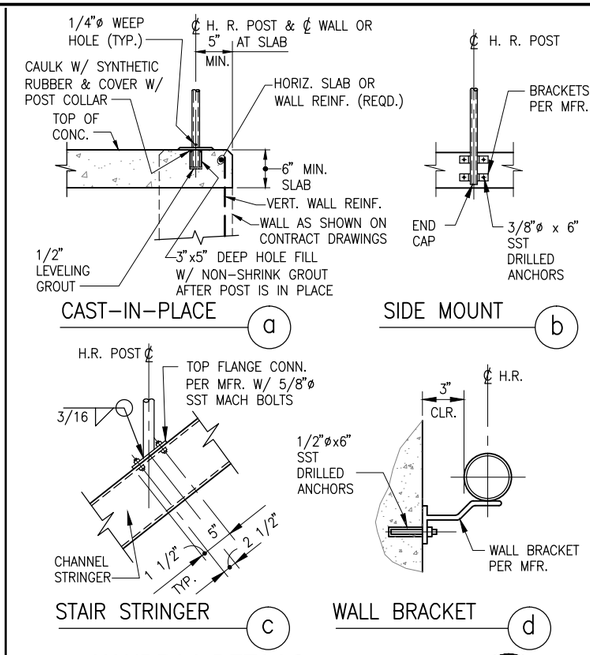

HANDRAIL DETAILS (23 / -)
NOT TO SCALE

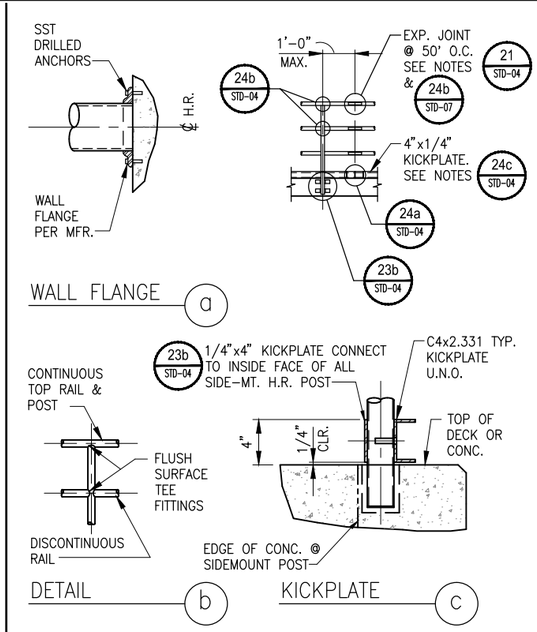

HANDRAIL DETAILS (24 / -)
NOT TO SCALE

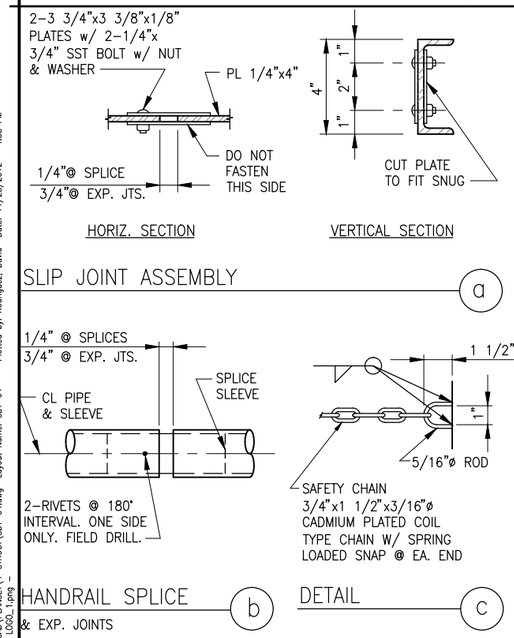

HANDRAIL DETAILS (25 / -)
NOT TO SCALE

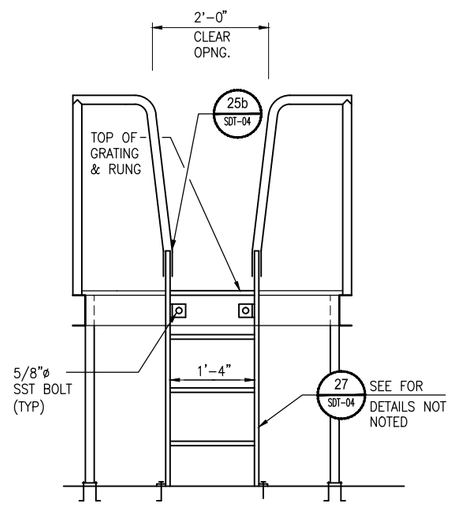

STEP-THROUGH LADDER (26 / -)
NOT TO SCALE

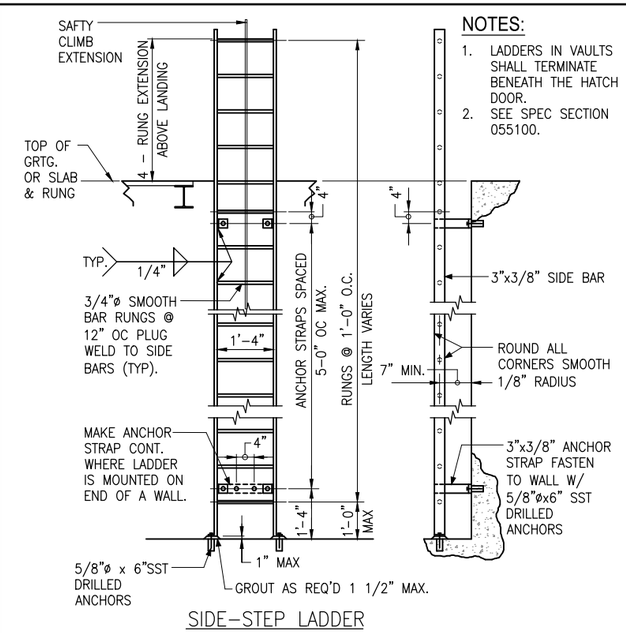

NOTES:
1. LADDERS IN VAULTS SHALL TERMINATE BENEATH THE HATCH DOOR.
2. SEE SPEC SECTION 055100.

SIDE-STEP STAINLESS STEEL LADDER DETAILS (27 / -)
NOT TO SCALE

PRELIMINARY 30% SUBMITTAL

0 1/2 1
IF THIS BAR DOES NOT MEASURE 1" THEN DRAWING IS NOT TO FULL SCALE

REV	DATE	DESCRIPTION	APPR

PROJECT ENGINEER: DAVE SCHERSCHEL
REG NUMBER: S1572
EXP DATE: 06/30/2012

AECOM
AECOM
1194 PACIFIC STREET, SUITE 204
SAN LUIS OBISPO, CA 93401
T 805.542.9840 F 805.542.9990
www.aecom.com

CITY OF EL PASO DE ROBLES
WATER TREATMENT PLANT PROJECT

DETAILS - 4

DESIGNED:
DETAILED: DJS TYO
CHECKED:
APPROVED:
DATE: November 2012
AECOM PROJECT NO. 60264606
P.R. PROJECT NO.
CADD STDS. AECOM

SDT-04
SHEET OF -

DWG: V:\PASO ROBLES\60264606-WTP\000 CAD\PLANSET\4-STRUCT\SDT-04.dwg Layout Name: SDT-04 - Plotted by: Rodriguez, David Date: 11/28/2012 - 4:35 PM
XREFS: G-BD-PR IMAGES: CITY OF PASO LOGO_1.png

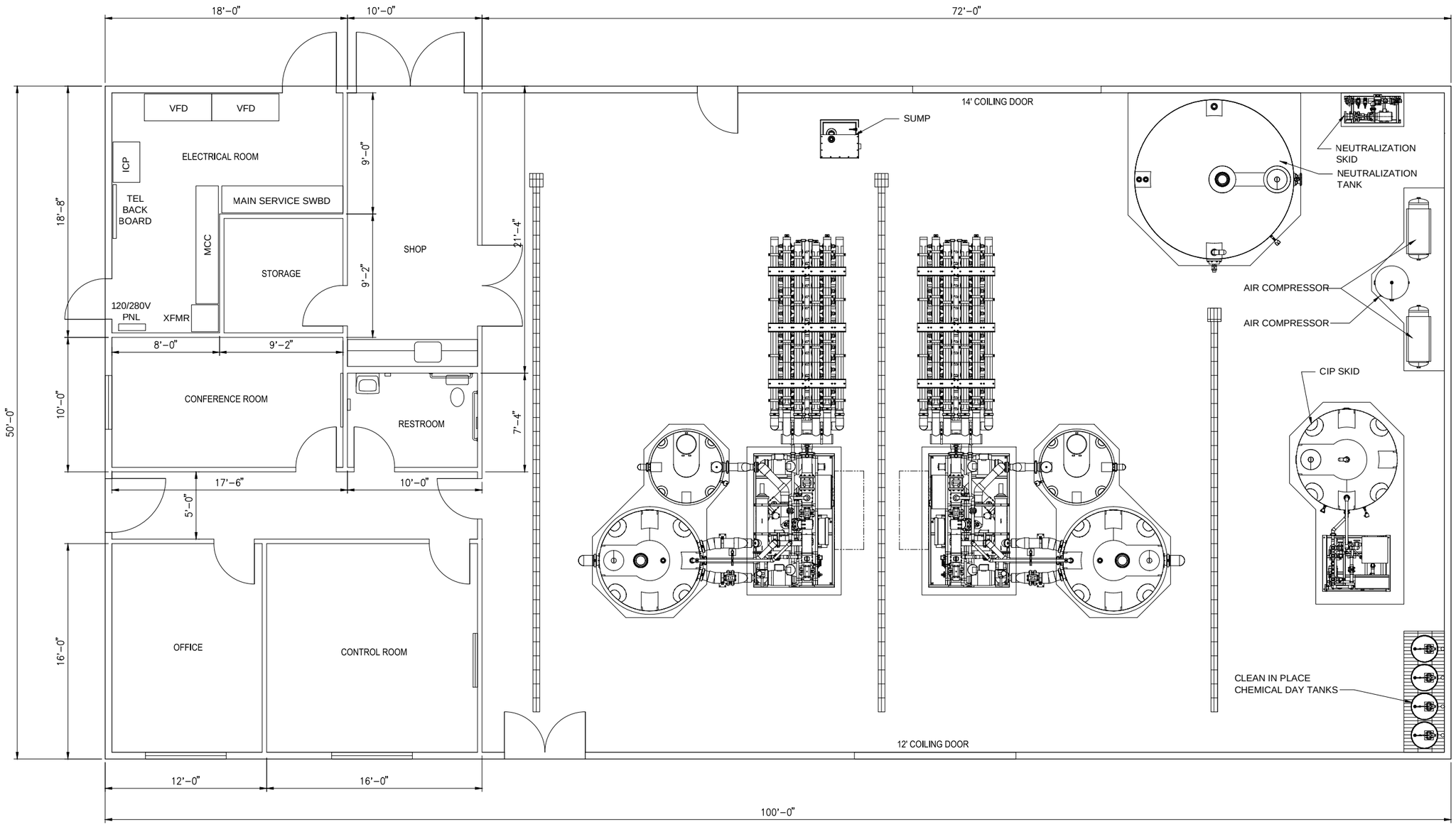

PRELIMINARY
30% SUBMITTAL

0 1/2 1
IF THIS BAR DOES NOT MEASURE 1" THEN DRAWING IS NOT TO FULL SCALE

REV	DATE	DESCRIPTION	APPR
1			
2			
3			
4			

PROJECT ENGINEER | REG NUMBER | EXP DATE

AECOM
AECOM
1194 PACIFIC STREET, SUITE 204
SAN LUIS OBISPO, CA 93401
T 805.542.9840 F 805.542.9990
www.aecom.com

CITY OF EL PASO DE ROBLES
WATER TREATMENT PLANT PROJECT

MEMBRANE BUILDING FLOOR PLAN

DESIGNED:
DETAILED:
CHECKED:
APPROVED:
DATE: November 2012
AECOM PROJECT NO. 60264606
P.R. PROJECT NO.
CADD STDS. AECOM

A00-01
SHEET
- OF -

DWG: V:\PASO ROBLES\60264606-WTP\000 CAD\PLANSET\ARCH\A00-01.dwg Layout Name: Layout1 - Plotted by: Rodriguez, David Date: 11/28/2012 - 3:56 PM
XREFS: G-BD-PR - A-FP-MEMB IMAGES: CITY OF PASO LOGO_1.png -

ELECTRICAL SYMBOLS - PLANS

SYMBOL	DESCRIPTION
DXXXX PXXXX TXXXX AXXXX FXXXX LXXXX MXXXX CXXXX	CONDUIT DESIGNATION: (SEE CONDUIT SCHEDULE) P = POWER D = DISCRETE A = ANALOG T = TELEPHONE F = FIBEROPTIC L = <250V CKT XXXX = CONDUIT REF. SP = SPARE, 1"CO. UON M = MANUFACTURER-SUPPLIED CABLE C = DATA (CAT6) CKT = CIRCUIT
	FLUORESCENT FIXTURE – CIRCLE INDICATES OUTLET, CEILING MOUNTED
	AUXILIARY LIGHT
	POLE MOUNTED LIGHTING FIXTURE & LIGHTING PULLBOX
	WALL MOUNTED LIGHTING FIXTURE
	POLE MOUNTED LIGHTING FIXTURES (2 PER POLE) & LIGHTING PULL BOX
A XX	FIXTURE TYPE – XX = FIXTURE WATTAGE (SEE LIGHTING FIXTURE SCHEDULE ON DWG. EDT-04)
PB01	GROUP OF PULLBOXES PB01 = REFERENCE OF GROUP QUANTITY AND TYPE PER PULLBOX SCHEDULE
PB-L	LIGHTING PULLBOX. SEE DWG EDT-03
XX	DUCTBANK UNDERGROUND XX = DUCTBANK REF. (SEE DUCTBANK SCHEDULE DWGS E-14,15)
	CONDUIT IN SLAB OR UNDERGROUND AS APPLICABLE
	CONDUIT EXPOSED, CONCEALED ABOVE SUSPENDED CEILING
G	GROUNDING ELECTRODE
FA	3/4" CONDUIT & WIRES FOR FIRE ALARM SYSTEM
HVAC	3/4" CONDUIT UNDER ELECTRICAL, CONTROL WIRES UNDER HVAC WORKS
	CONDUIT BODY WHERE ONE FLEXIBLE CONDUIT IS SHOWN OR REQUIRED. JBOX WHERE MORE THAN ONE FLEXIBLE CONDUIT IS SHOWN OR REQUIRED.
	CONDUIT BENDS TOWARD OBSERVER.
	CONDUIT BENDS AWAY FROM OBSERVER
1	HOMERUN TO PANEL, CIRCUIT 1
XXXX	CONTINUED TO EQUIPMENT LISTED UNDER "FROM" COLUMN OF CONDUIT SCHEDULE
	STUB-OUT & CAP
E-2 a	CONTINUED ON REFERENCED DRAWING BEYOND THE TILDE SYMBOL a REFERENCE OF CONTINUATION WHERE USED
a 2	CONTINUED ON REFERENCED DRAWING. a REFERENCE OF CONTINUATION. ARROW INDICATES DIRECTION OF CONTINUATION ON THE OTHER DRAWING BEYOND THE TILDE SYMBOL
1	SEE NOTE INDICATED

ELECTRICAL SYMBOLS - PLANS (CONT.)

SYMBOL	DESCRIPTION
	DUPLEX RECEPTACLE, +12" UON. SEE GENERAL NOTE 4.
G	DUPLEX RECEPTACLE, GFCI +12" UON. SEE GENERAL NOTE 4.
S Z1	FIRE ALARM AUTOMATIC SMOKE DETECTOR Z1 – ZONE REFERENCE
B	FIRE ALARM STROBE/HORN
FAC	FIRE ALARM CONTROL PANEL
F Z1	MANUAL FIRE STATION Z1 – ZONE REFERENCE
DS	DUCT SMOKE DETECTOR
T	ROOM THERMOSTAT BY HVAC INSTALLER
M	MOTORIZED ACTUATOR
$	SINGLE POLE LIGHTING SWITCH, +48" UON SEE GENERAL NOTE 4
$2	2-POLE LIGHTING SWITCH, +48" UON SEE GENERAL NOTE 4
$3	3-WAY LIGHTING SWITCH, +48" UON SEE GENERAL NOTE 4
$4	4-WAY LIGHTING SWITCH, +48" UON SEE GENERAL NOTE 4
$abc	1-POLE 3-GANG LIGHTING SWITCH. SEE GENERAL NOTE 4. abc – REF. OF LIGHTS CONTROLLED
$M	MANUAL STARTER
	NON-FUSED DISCONNECT SWITCH. SEE SINGLE LINE DIAGRAM FOR RATINGS
	PANELBOARD
	LOCAL CONTROL SWITCH UON. MOUNTED ON A C-CHANNEL SUPPORT
	TELEPHONE OUTLET, +12" UON
	DATA OUTLET, +12" UON
	C-CHANNEL SUPPORT WITH BACKPLATE. SEE DETAIL 3/EDT-01
J	FLEXIBLE CONDUIT CONNECTION
FOES	FIBER OPTIC ETHERNET SWITCH
TTC	TELEPHONE TERMINAL CABINET
FOPP	FIBEROPTIC PATCH PANEL
	RECEPTACLE. CONFIGURATION AND RATING AS NOTED

ELECTRICAL SYMBOLS - SINGLE LINE DIAGRAM

SYMBOL	DESCRIPTION
	POWER TRANSFORMER
	FUSE
	GROUND
10	MOTOR, 10 HORSEPOWER
100A/3P	CIRCUIT BREAKER, 3P – 3-POLE. 100A – 100 AMPERES.
100A/MCP	MOTOR CIRCUIT PROTECTOR 100A-1 CONTINUOUS RATING
	CURRENT TRANSFORMER
	CONTACTOR
1	STARTER, 1 – NEMA SIZE
	POTENTIAL TRANSFORMER
	DRY-TYPE TRANSFORMER
VFD	VARIABLE FREQUENCY DRIVE
PM	POWER MONITORING DEVICE
M	UTILITY METER
SPD	SURGE PROTECTIVE DEVICE
	NON-FUSED DISCONNECT SWITCH, 480V, 30A, 3P, UON
I	CUBICLE OR SECTION. REFERENCE AS SHOWN ON EQUIPMENT ELEVATION
TWH	TANKLESS WATER HEATER

ELECTRICAL SYMBOLS - SCHEMATIC DIAGRAMS

NORMALLY OPEN	NORMALLY CLOSED	DEVICE
		CONTACT
		TIMED CONTACT – CONTACT ACTION RETARDED ON ENERGIZATION
		TIMED CONTACT – CONTACT ACTION RETARDED ON DEENERGIZATION
		PUSHBUTTON, SINGLE CIRCUIT, MOMENTARY CONTACT
		PUSHBUTTON, SINGLE CIRCUIT, MAINTAINED CONTACT. LOS – LOCKOUT STOP
		LIMIT SWITCH, TORQUE SWITCH
		LIQUID LEVEL SWITCH
		PRESSURE SWITCH
		THERMOSTAT, TEMPERATURE SWITCH
		FLOW SWITCH
		SELECTOR SWITCH
		FUSE
O/L'S		MOTOR OVERLOAD HEATER CONTACTS
A		PILOT LIGHT, R=RED, W=WHITE, G=GREEN, A=AMBER
W		PILOT LIGHT, PUSH-TO-TEST, R=RED, W=WHITE, G=GREEN, A=AMBER
R		RELAY, CR-CONTROL RELAY, AR-ALARM RELAY
TD		TIME DELAY RELAY. TIME DELAY ON ENERGIZATION
TD TDOD		TIME DELAY RELAY. TIME DELAY ON DEENERGIZATION
M		STARTER COIL
S		SOLENOID OPERATED VALVE
ETM		ELAPSED TIME METER
		CONTROL POWER TRANSFORMER
		GROUND
		WIRING IN MOTOR STARTER, UON
		FIELD WIRING
		WIRE TERMINAL IN MOTOR STARTER
		MOTOR ANTICONDENSATION HEATER

ABBREVIATIONS

A	AMPERES
AFF	ABOVE FINISHED FLOOR
AFG	ABOVE FINISHED GRADE
CKT	CIRCUIT
CO	CONDUIT ONLY
CP	CONTROL PANEL
CPT	CONTROL POWER TRANSFORMER
CR	CARD READER SYSTEM
CRC	CARD READER CONTROLLER
CW	COOL WHITE
DB	DUCT BANK
DWG	DRAWING
ELEC	ELECTRICAL
F	FLUORESCENT
FA	FIRE ALARM
FACP	FIRE ALARM CONTROL PANEL
FOPP	FIBER OPTIC PATCH PANEL
G	GROUND FAULT INTERRUPTER
GCS	GATE CONTROL STATION
GFI	GROUND FAULT INTERRUPTER
GICS	GATE INTERPHONE CALL STATION
GND	GROUND
GOB	GATE OPEN BUTTON
GOCP	GATE OPERATOR CONTROL PANEL
HID	HIGH INTENSITY DISCHARGE
HOA	HAND OFF AUTOMATIC
HPS	HIGH PRESSURE SODIUM
ICP	INSTRUMENTATION CONTROL PANEL
INSTR	INSTRUMENTATION
IWH	INSTANTANEOUS WATER HEATER
JB	JUNCTION BOX
JBOX	JUNCTION BOX
kcmil	THOUSAND CIRCULAR MILS
KVA	KILO VOLT-AMPERE
LCP	LOCAL CONTROL PANEL
LOS	LOCKOUT SWITCH
LV	LOW VOLTAGE
MAX	MAXIMUM
NC	NORMALLY CLOSED
NIC	NOT IN CONTRACT
NO	NORMALLY OPEN
NTS, NS	NOT TO SCALE
O/C	OPEN/CLOSE
OL'S	OVERLOADS
PB	PULLBOX
PG&E	PACIFIC GAS & ELECTRIC
PNL	PANEL
PT	POTENTIAL TRANSFORMER
PWR	POWER
QTY	QUANTITY
REF	REFERENCE
SCCR	SHORT CIRCUIT CURRENT RATING
SEC	SECOND
SIM	SIMILAR
SP	SPARE
TDB	TELEPHONE DATA BACKBOARD
TEMP	TEMPERATURE
TJB	TERMINAL JUNCTION BOX
TSP	TWISTED SHIELDED PAIR
TST	TWISTED SHIELDED TRIAD
TTC	TELEPHONE TERMINAL CABINET
TYP	TYPICAL
UON	UNLESS OTHERWISE NOTED
UPS	UNINTERRUPTIBLE POWER SUPPLY
V	VOLT
VD	VEHICLE DETECTOR
VFD	VARIABLE FREQUENCY DRIVE
VS	VARIABLE SPEED
W	WATT
WP	WEATHERPROOF
WW	WARM WHITE
XFMR	TRANSFORMER
Z1	FIRE ALARM ZONE REFERENCE

GENERAL NOTES:

1. NOT ALL SYMBOLS AND/OR ABBREVIATIONS INCLUDED IN THIS SHEET ARE NECESSARILY USED IN THIS PROJECT.
2. WIRE QUANTITY IN CIRCUITS ASSOCIATED WITH PANELBOARDS ARE NOT SHOWN. PROVIDE QUANTITY OF WIRES AS REQUIRED. MINIMUM CONDUCTOR SIZES SHALL BE #12 WITH A #12 GND, UNLESS LARGER SIZES ARE NOTED, SUCH AS FOR AREA LIGHTING WHERE CONDUCTOR SIZES ARE CALLED OUT IN DRAWING EDT-03 AND SOME OTHER AREA LIGHTS CONDUCTOR SIZES OF WHICH ARE INDICATED IN THE RELEVANT PANELBOARD SCHEDULES.
3. INSTRUMENTS ARE SHOWN IN THEIR GENERAL VICINITY AND MAY NOT NECESSARILY MATCH LOCATIONS SHOWN ON THE MECHANICAL SHEETS. VERIFY ACTUAL LOCATIONS OF INSTRUMENTS AND RUN ASSOCIATED CONDUITS ACCORDINGLY.
4. ALL RECEPTACLE & SWITCH INSTALLATION HEIGHTS SHALL COMPLY WITH REQUIREMENTS OF SECTION 1117B.6 (2007 CALIFORNIA BUILDING CODE).
5. BOND MAGNETIC FLOW SENSOR AND ADJOINING PIPES PER MANUFACTURER'S RECOMMENDED METHOD, BASED ON PIPE TYPE AND CATHODIC PROTECTION OF PIPES WHERE APPLICABLE.
6. CONDUIT STUB-UPS SERVING EQUIPMENT SUCH AS MOTORS SHALL BE LOCATED AS CLOSE TO THE EQUIPMENT AS PRACTICABLE. EXTEND STUBBED-UP CONDUITS TO HEIGHTS THAT WOULD LIMIT FLEX CONDUIT LENGTHS TO 5 FEET. USE UNISTRUT SUPPORTS FOR THE STUBBED-UP CONDUIT AS REQUIRED BY NEC.
7. RECORD DRAWINGS SHALL SHOW OFFSET DISTANCES OF UNDERGROUND CONDUITS FROM FIXED ABOVE-GRADE OBJECTS SUCH AS FENCES, BUILDINGS, OR FROM UNDERGROUND MAJOR PIPING.

ELECTRIC UTILITY CONTACT

COMPANY: –
ADDRESS: –
–
–

CONTACT: –
TEL.: –
FAX: –
EMAIL: –

PRELIMINARY 30% SUBMITTAL

0 1/2 1
IF THIS BAR DOES NOT MEASURE 1" THEN DRAWING IS NOT TO FULL SCALE

REV	DATE	PROJECT ENGINEER	DESCRIPTION	REG NUMBER	EXP DATE	APPR

AECOM
AECOM
1194 PACIFIC STREET, SUITE 204
SAN LUIS OBISPO, CA 93401
T 805.542.9840 F 805.542.9990
www.aecom.com

CITY OF EL PASO DE ROBLES
WATER TREATMENT PLANT PROJECT

ELECTRICAL LEGEND AND ABBREVIATIONS

DESIGNED:
DETAILED:
CHECKED:
APPROVED:
DATE: November 2012
AECOM PROJECT NO. 60264606
P.R. PROJECT NO.
CADD STDS. AECOM

E00-01
SHEET
- OF -

DWG: V:\PASO ROBLES\60264606-WTP\000 CAD\PLANSET\6-ELEC\E00-01.dwg Layout Name: E00-01 – Plotted by: Rodriguez, David Date: 11/28/2012 – 3:58 PM
XREFS: C-BD-PR IMAGES: CITY OF PASO LOGO_1.png –

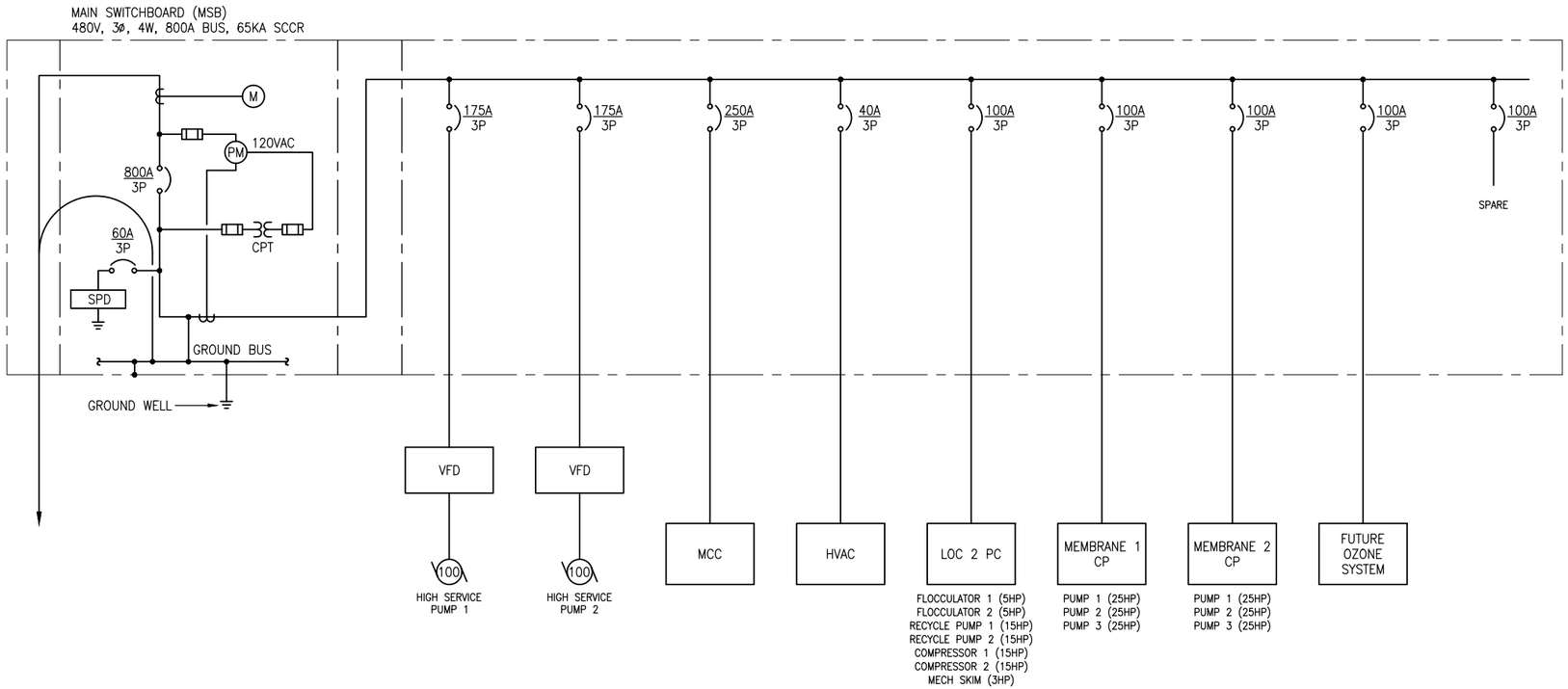

MSB SINGLE LINE DIAGRAM

1
-

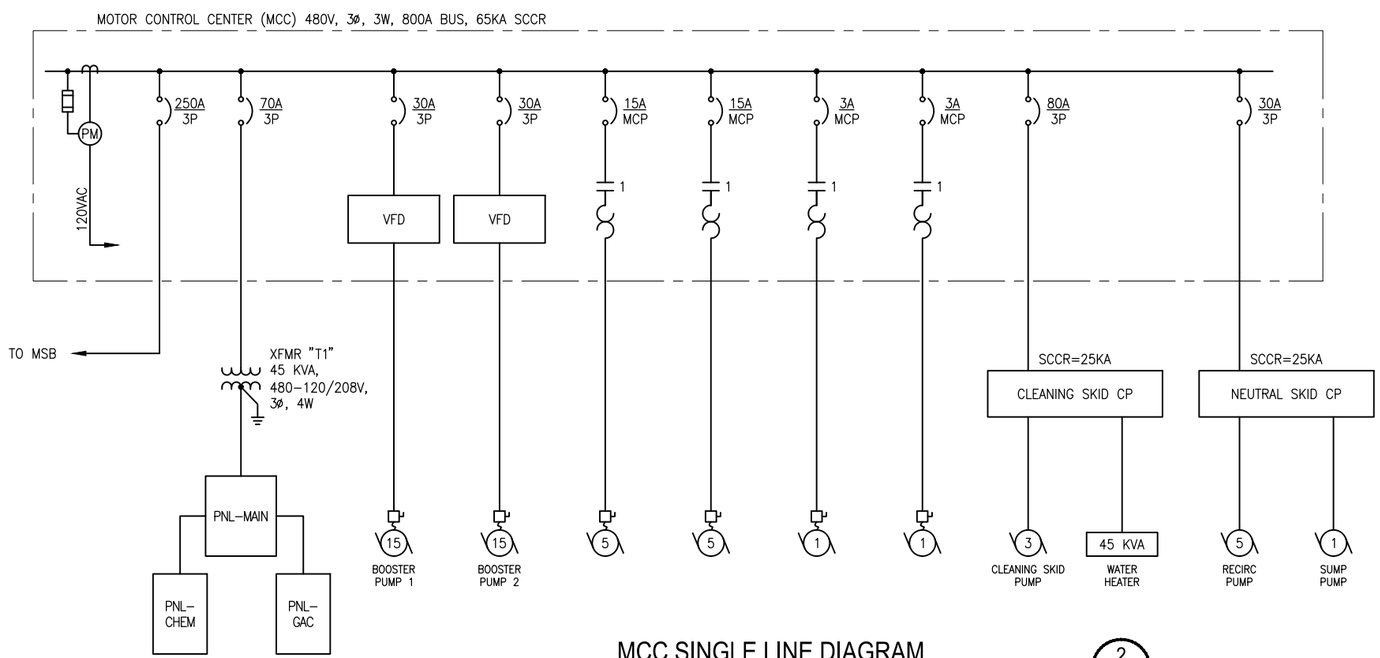

MCC SINGLE LINE DIAGRAM

2
-

PRELIMINARY
30% SUBMITTAL

0 1/2 1
IF THIS BAR DOES NOT MEASURE 1" THEN DRAWING IS NOT TO FULL SCALE

REV	DATE	DESCRIPTION	APPR

PROJECT ENGINEER | REG NUMBER | EXP DATE

AECOM
AECOM
1194 PACIFIC STREET, SUITE 204
SAN LUIS OBISPO, CA 93401
T 805.542.9840 F 805.542.9990
www.aecom.com

CITY OF EL PASO DE ROBLES
WATER TREATMENT PLANT PROJECT

SINGLE LINE DIAGRAMS

DESIGNED:
DETAILED:
CHECKED:
APPROVED:
DATE: November 2012
AECOM PROJECT NO. 60264606
P.R. PROJECT NO.
CADD STDS. AECOM

E00-02
SHEET
- OF -

DWG: V:\PASO ROBLES\60264606-WTP\000 CAD\PLANSET\6-ELEC\E00-02.dwg Layout Name: E00-02 - Plotted by: Rodriguez, David Date: 11/28/2012 - 3:58 PM
XREFS: G-BD-PR IMAGES: CITY OF PASO LOGO_1.png -

LOAD DESCRIPTION	HP (KVA IF NOT NOTED)	VOLTAGE	PHASE	CON NECTED LOADS (KVA)	MAXIMUM DEMAND (KVA)	MAXIMUM DEMAND (AMPS)
MCC	114	480	3	114	114	137
HVAC	15	480	3	15	15	18
LOC 2 CP	52	480	3	52	52	62
MEMBRANE 1 CP	57	480	3	57	57	68
MEMBRANE 2 CP	57	480	3	57	57	68
(FUTURE) OZONE SYSTEM	50	480	3	50	50	60
HIGH SERVICE PUMP 1	100 HP	480	3	103	103	124
HIGH SERVICE PUMP 2	100 HP	480	3	103	103	124
MSB	**550**	**480**	**3**	**550**	**440**	**529**
CLEANING SKID CP	49	480	3	49	49	59
NEUTR SKID CP	8.1	480	3	8.1	8.1	9.7
XFMR-T1	6.1	480	3	6.1	6.1	7.4
RESID BASIN 1 PUMP 1	5 HP	480	3	6.3	6.3	7.6
RESID BASIN 1 PUMP 2	5 HP	480	3	6.3	6.3	7.6
RESID BASIN 2 PUMP 1	1 HP	480	3	1.7	1.7	2.1
RESID BASIN 2 PUMP 2	1 HP	480	3	1.7	1.7	2.1
BOOSTER PUMP 1	15 HP	480	3	17	17	21
BOOSTER PUMP 2	15 HP	480	3	17	17	21
MCC	**114**	**480**	**3**	**114**	**114**	**137**
MEMBRANE 1 PUMP 1	25 HP	480	3	28	28	34
MEMBRANE 1 PUMP 2	25 HP	480	3	28	28	34
MEMBRANE 1 PUMP 3	25 HP	480	3	0.0	0.0	0.0
MEMBRANE 1 CP	**57**	**480**	**3**	**57**	**57**	**68**
MEMBRANE 2 PUMP 1	25 HP	480	3	28	28	34
MEMBRANE 2 PUMP 2	25 HP	480	3	28	28	34
MEMBRANE 2 PUMP 3	25 HP	480	3	0.0	0.0	0.0
MEMBRANE 2 CP	**57**	**480**	**3**	**57**	**57**	**68**
FLOCCULATOR 1	5 HP	480	3	6.3	6.3	7.6
FLOCCULATOR 2	5 HP	480	3	6.3	6.3	7.6
RECYCLE PUMP 1	15 HP	480	3	17	17	21
RECYCLE PUMP 2	15 HP	480	3	0.0	0.0	0.0
COMPRESSOR 1	15 HP	480	3	17	17	21
COMPRESSOR 2	15 HP	480	3	0.0	0.0	0.0
MECHANICAL SKIM	3 HP	480	3	4.0	4.0	4.8
LOC 2 CP	**52**	**480**	**3**	**52**	**52**	**62**

LOAD TABULATION 1 -

PRELIMINARY 30% SUBMITTAL

0 1/2 1

IF THIS BAR DOES NOT MEASURE 1" THEN DRAWING IS NOT TO FULL SCALE

REV	DATE	DESCRIPTION	APPR

PROJECT ENGINEER REG NUMBER EXP DATE

AECOM
1194 PACIFIC STREET, SUITE 204
SAN LUIS OBISPO, CA 93401
T 805.542.9840 F 805.542.9990
www.aecom.com

CITY OF EL PASO DE ROBLES
WATER TREATMENT PLANT PROJECT

LOAD TABULATION

DESIGNED:
DETAILED:
CHECKED:
APPROVED:
DATE: November 2012
AECOM PROJECT NO. 60264606
P.R. PROJECT NO.
CADD STDS. AECOM

E00-03
SHEET
- OF -

DWG: V:\PASO ROBLES\60264606-WTP\000 CAD\PLANSET\G-ELEC\E00-03.dwg Layout Name: E00-03 - Plotted by: Rodriguez, David Date: 11/28/2012 - 3:59 PM
XREFS: G-BD-PR IMAGES: CITY OF PASO LOGO_1.png -

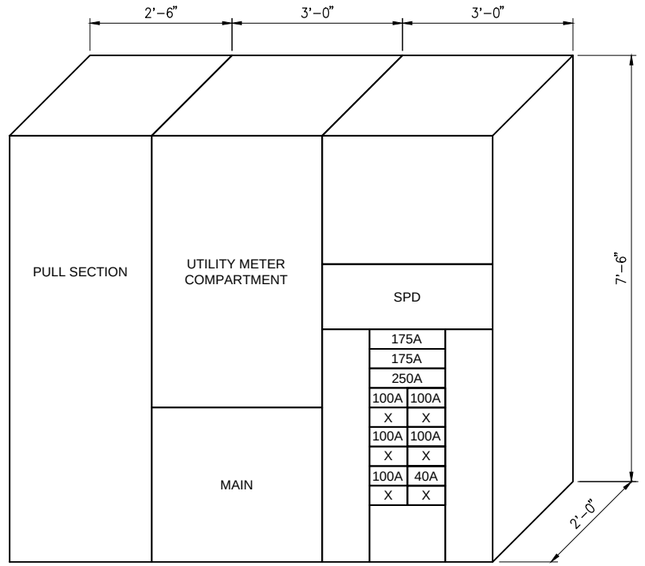

MSB ELEVATION

SCALE: 3/4" = 1'

1
-

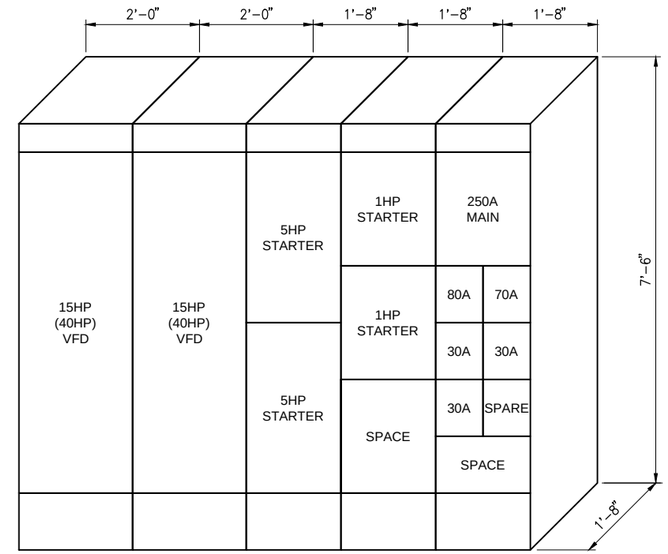

MCC ELEVATION

SCALE: 3/4" = 1'

2
-

PRELIMINARY
30% SUBMITTAL

0 1/2 1
IF THIS BAR DOES NOT MEASURE 1" THEN DRAWING IS NOT TO FULL SCALE

REV	DATE	DESCRIPTION	APPR

PROJECT ENGINEER | REG NUMBER | EXP DATE

AECOM
1194 PACIFIC STREET, SUITE 204
SAN LUIS OBISPO, CA 93401
T 805.542.9840 F 805.542.9990
www.aecom.com

CITY OF EL PASO DE ROBLES
WATER TREATMENT PLANT PROJECT

MCC AND MSB ELEVATIONS

DESIGNED:
DETAILED:
CHECKED:
APPROVED:
DATE: November 2012
AECOM PROJECT NO. 60264606
P.R. PROJECT NO.
CADD STDS. AECOM

E00-04
SHEET
- OF -

DWG: V:\PASO ROBLES\60264606-WTP\000 CAD\PLANSET\G-ELEC\E00-04.dwg Layout Name: E00-04 - Plotted by: Rodriguez, David Date: 11/28/2012 - 3:59 PM
XREFS: G-BD-PR IMAGES: CITY OF PASO LOGO_1.png -

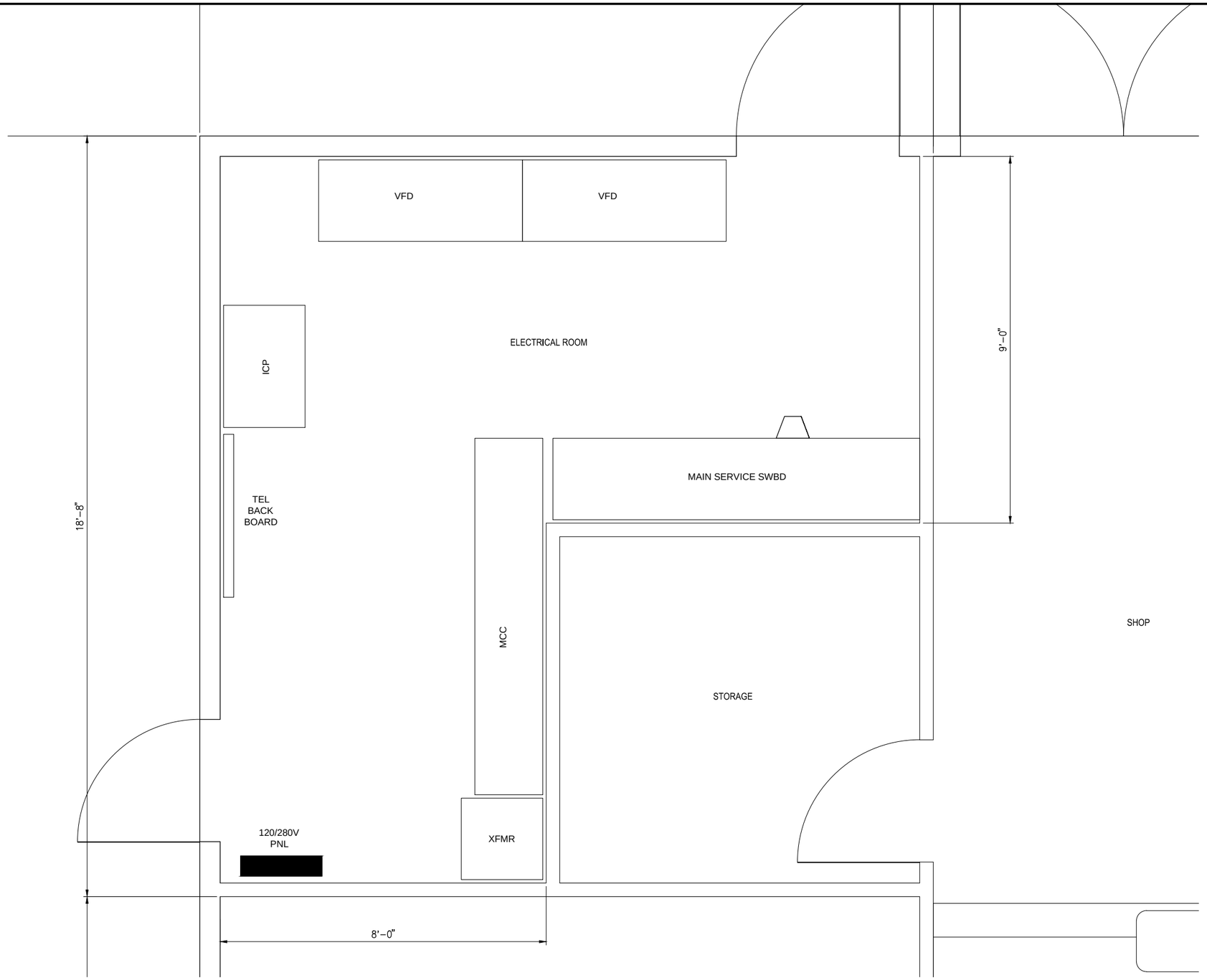

ELECTRICAL ROOM 1
SCALE: 3/4" = 1'

PRELIMINARY
30% SUBMITTAL

0 1/2 1
IF THIS BAR DOES NOT MEASURE 1" THEN DRAWING IS NOT TO FULL SCALE

REV	DATE	DESCRIPTION	APPR

PROJECT ENGINEER REG NUMBER EXP DATE

AECOM
AECOM
1194 PACIFIC STREET, SUITE 204
SAN LUIS OBISPO, CA 93401
T 805.542.9840 F 805.542.9990
www.aecom.com

CITY OF EL PASO DE ROBLES
WATER TREATMENT PLANT PROJECT

MEMBRANE BUILDING ELECTRICAL ROOM

DESIGNED:
DETAILED:
CHECKED:
APPROVED:
DATE: November 2012
AECOM PROJECT NO. 60264606
P.R. PROJECT NO.
CADD STDS. AECOM

E00-05
SHEET
- OF -

DWG: V:\PASO ROBLES\60264606-WTP\000 CAD\PLANSET\6-ELEC\E00-05.dwg Layout Name: E00-05 - Plotted by: Rodriguez, David Date: 11/28/2012 - 4:00 PM
XREFS: G-BD-PR - A-FP-MEMB IMAGES: CITY OF PASO LOGO_1.png -

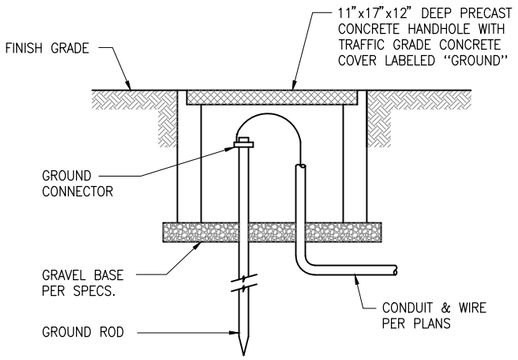

GROUND WELL DETAIL (1 / -)

NOT TO SCALE

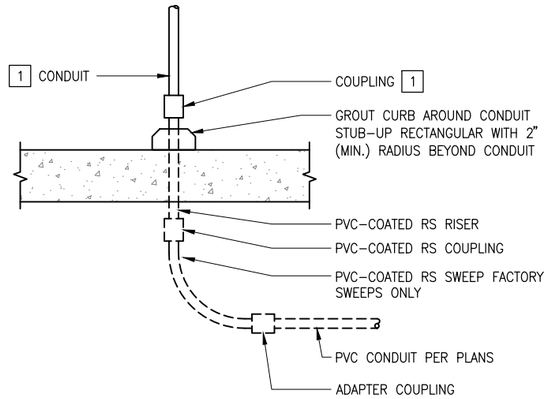

EXPOSED CONDUIT STUB-UP DETAIL (2 / -)

NOT TO SCALE

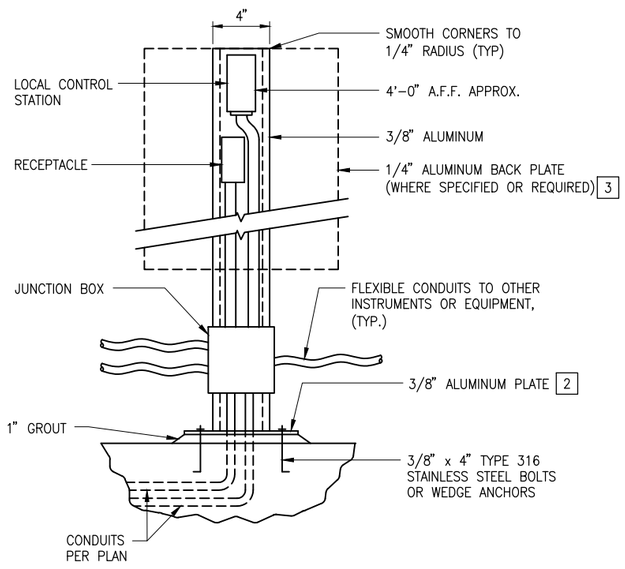

FIELD CONTROL STATION DETAIL (3 / -)

NOT TO SCALE

NOTES:

1. TYPE OF CONDUIT AND FITTING PER SPECS.
2. BOTTOM OF PLATE SHALL BE COATED WITH SYSTEM 54 COATING PER PAINTING SPECIFICATIONS SECTION 099000.
3. DIMENSIONS AS REQUIRED.

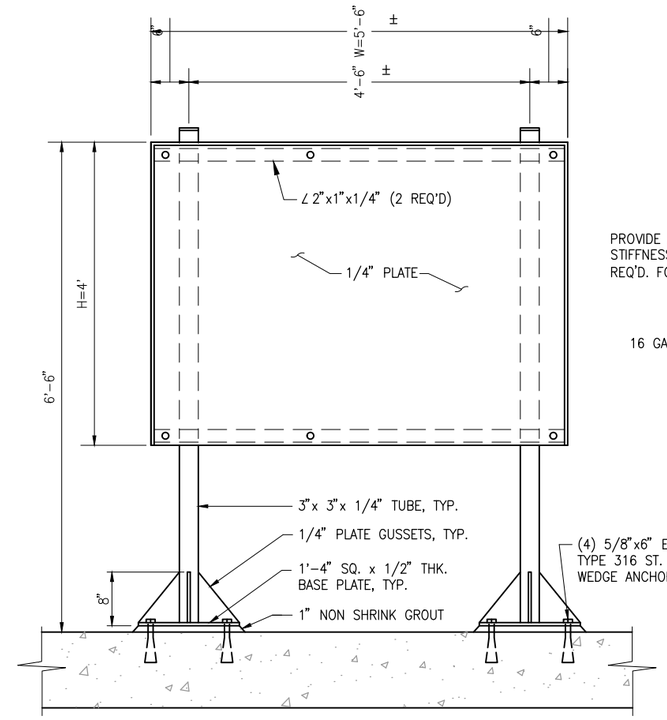

SECTION (A / —)

SCALE: 1" = 1'-0"

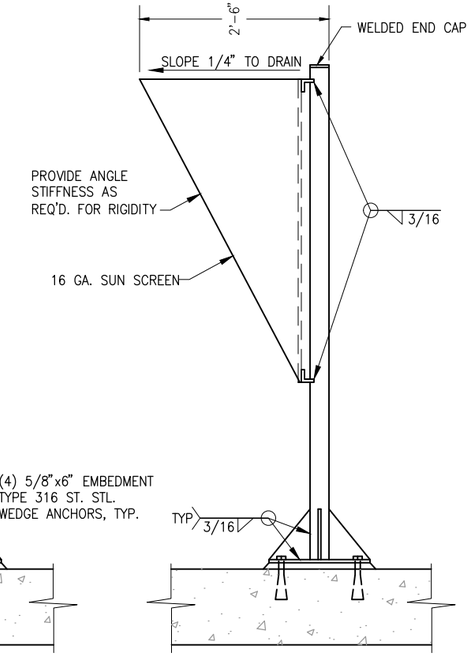

SECTION (B / —)

SCALE: 1" = 1'-0"

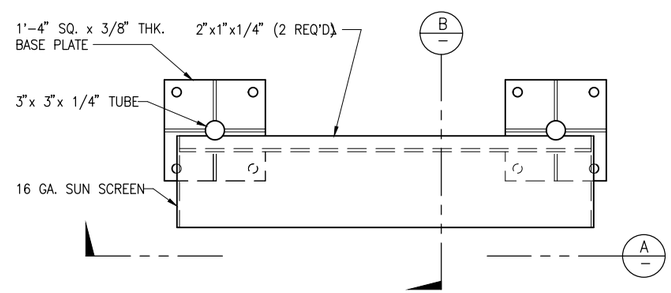

MISC. EQUIPMENT SUPPORT DETAIL (4 / -)

NOT TO SCALE

PRELIMINARY 30% SUBMITTAL

0 1/2 1

IF THIS BAR DOES NOT MEASURE 1" THEN DRAWING IS NOT TO FULL SCALE

REV	DATE	DESCRIPTION	APPR

PROJECT ENGINEER | REG NUMBER | EXP DATE

AECOM
1194 PACIFIC STREET, SUITE 204
SAN LUIS OBISPO, CA 93401
T 805.542.9840 F 805.542.9990
www.aecom.com

CITY OF EL PASO DE ROBLES
WATER TREATMENT PLANT PROJECT

ELECTRICAL DETAILS (1 OF 4)

DESIGNED:
DETAILED:
CHECKED:
APPROVED:
DATE: November 2012
AECOM PROJECT NO. 60264606
P.R. PROJECT NO.
CADD STDS. AECOM

E00-06
SHEET - OF -

DWG: V:\PASO ROBLES\60264606-WTP\000 CAD\PLANSET\G-ELEC\E00-06.dwg Layout Name: E00-06 - Plotted by: Rodriguez, David Date: 11/28/2012 - 4:00 PM
XREFS: G-BD-PR IMAGES: CITY OF PASO LOGO_1.png -

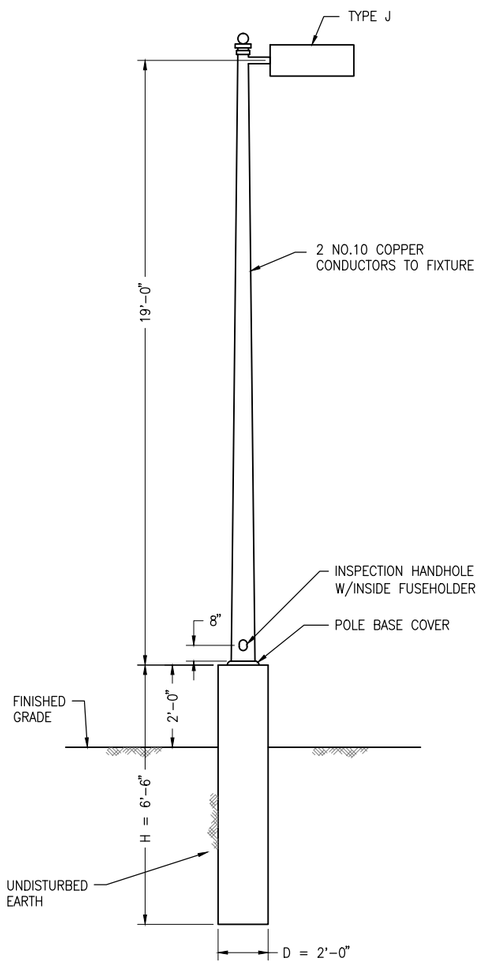

ELEVATION

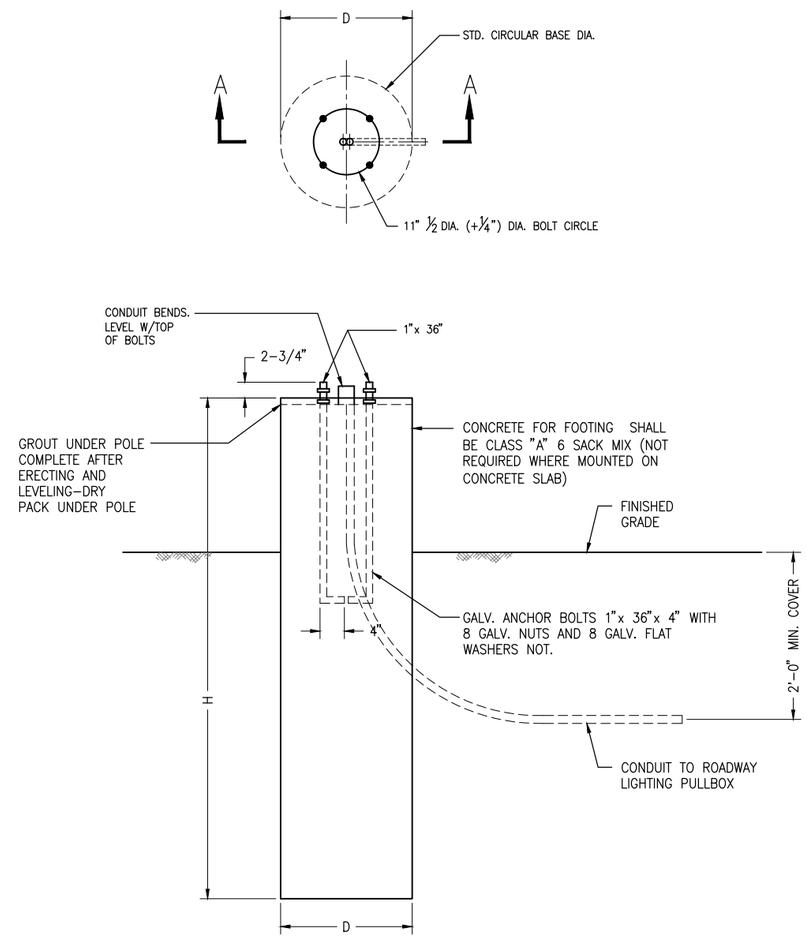

SECTION A-A
FOUNDATION

ROADWAY LIGHT INSTALLATION

NOT TO SCALE

1
-

ROADWAY LIGHTING GENERAL NOTES

1. SCHEDULE 80 P.V.C. SHALL BE USED IN ALL LOCATIONS. ALL ROADWAY CROSSINGS SHALL BE INSTALLED PERPENDICULAR TO CURB LINE (NO ANGLE CROSSINGS SHALL BE PERMITTED).
2. MINIMUM WIRE SIZE IN UNDERGROUND CONDUIT SHALL BE NO. 8 COPPER; WHERE MULTIPLE FIXTURES AND EXTENDED DISTANCES ON ONE CIRCUIT ARE USED, THE FIXTURE CONNECTIONS AND SPLICES SHALL BE MADE IN PULL BOXES.
3. METAL POLES SHALL BE GROUNDED AS REQUIRED BY NEC ART. #410.21 AND 250.68(B). ARTICLE 410.21.
4. CONTROLS SHALL BE PROVIDED FOR AUTOMATIC AND MANUAL OPERATION PER WIRING DIAGRAM SHOWN IN DETAIL 1 ON DWG. EDT-04.
5. ALL STREET LIGHT POLES AND BASE COVERS SHALL BE ALUMINUM.
6. WHERE ALUMINUM COMES IN CONTACT WITH CONCRETE, COAT SURFACE AS SPECIFIED IN SPEC. SECTION 260500.
7. CONTRACTOR SHALL SUBMIT ACCURATE AS-BUILT DRAWINGS OF ALL CONDUIT PATHS, LOCATIONS OF RESPECTIVE JUNCTION (PULL) BOXES PRIOR TO ENERGIZING.
8. NO LIGHTS WILL BE ENERGIZED UNTIL THE OWNER RECEIVES ACCURATE AS-BUILT SCHEMATICS OF ALL CONDUIT PATHS.
9. ALL SPLICES SHALL BE IN APPROVED CONCRETE JUNCTION BOXES. SPLICES SHALL BE MADE WATER PROOF WHEN BELOW GRADE. PULL BOXES SHALL BE INSTALLED AT 250 FEET MAXIMUM SPACING OR 250 MAX FOR TERMINATION POINTS. SPLICE BOXES SHALL BE CHRISTY N9, CALTRANS SIZE 3 1/2, ELECTRICAL BOX OR EQUAL. A PULL BOX IS REQUIRED AT EACH POLE WITHIN 6' OF BASE.
10. OVERCURRENT PROTECTION: PROVIDE "TRON, IN LINE" BREAK-AWAY TYPE WATERPROOF FUSEHOLDERS RATED AT 30 AMPS 250 VOLTS (OR APPROVED EQUAL) WITH PROPER FUSING OF 10 AMP FUSE PER LOAD REQUIREMENTS FOR EACH STREET LIGHT WHEN INSTALLED. USE FERRAZ SHAWMUT NO. FEB-11-11-BA OR APPROVED EQUAL.
11. ALL CONDUCTORS SHALL HAVE INSULATION COLORS APPROPRIATE TO THEIR USE AND ALL APPLICABLE CODES. THE USE OF COLORED PHASE TAPE SHALL NOT BE ALLOWED.

PRELIMINARY
30% SUBMITTAL

0 1/2 1
IF THIS BAR DOES NOT MEASURE 1" THEN DRAWING IS NOT TO FULL SCALE

REV	DATE	DESCRIPTION	APPR
1			
2			
3			
4			

PROJECT ENGINEER | REG NUMBER | EXP DATE

AECOM
AECOM
1194 PACIFIC STREET, SUITE 204
SAN LUIS OBISPO, CA 93401
T 805.542.9840 F 805.542.9990
www.aecom.com

CITY OF EL PASO DE ROBLES
WATER TREATMENT PLANT PROJECT

ELECTRICAL DETAILS
(2 OF 4)

DESIGNED:
DETAILED:
CHECKED:
APPROVED:
DATE: November 2012
AECOM PROJECT NO. 60264606
P.R. PROJECT NO.
CADD STDS. AECOM

E00-07
SHEET
- OF -

DWG: V:\PASO ROBLES\60264606-WTP\000 CAD\PLANSET\6-ELEC\E00-07.dwg Layout Name: E00-07 - Plotted by: Rodriguez, David Date: 11/28/2012 - 4:00 PM
XREFS: G-BD-PR IMAGES: CITY OF PASO LOGO_1.png -

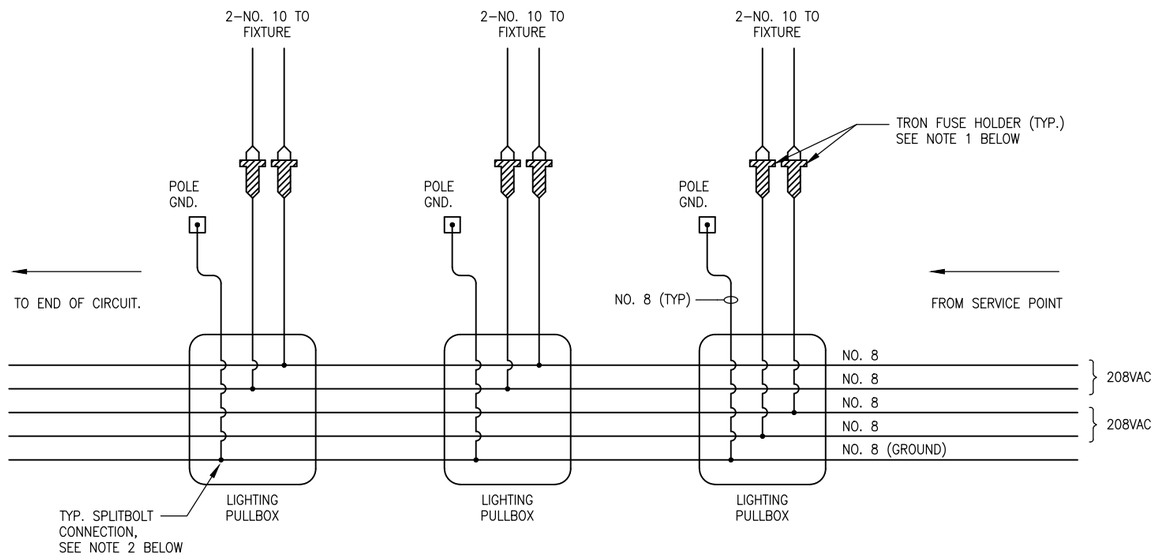

TYPICAL CONNECTION ON ONE OR MORE POLES AND/OR WALLPACKS

NOTES:

1. PROVIDE BREAK–AWAY TRON FUSE HOLDER AND 10 AMP FUSE. FERRAZ–SHAWMUT FEB–11–11–BA OR APPROVED EQUAL. LOCATE INSIDE POLE @ BEHIND HANDHOLE COVER.
2. INSULATE HOT AND GND. SPLICES AS FOLLOWS: COVER WITH 2–LAYERS RUBBER TAPE–FILLING VOIDS. APPLY 1–LAYER 1/2 LAPPED PVC TAPE. APPLY 1–LAYER FRICTION TAPE & COAT WITH AN ELECTRICAL INSULATING COATING (SKOTCHKOTE OR EQUAL).

ROADWAY LIGHT CONNECTION DIAGRAM

NOT TO SCALE

1
–

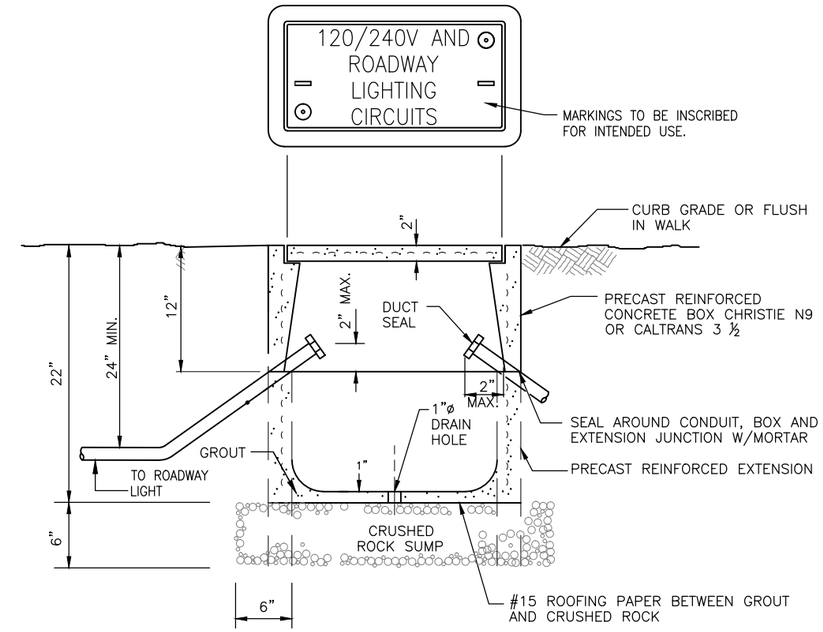

GENERAL NOTES:

1. PULL BOXES SHALL NOT BE INSTALLED OVER JOINT TRENCHES, IN DRIVEWAYS OR IN ROADWAYS.
2. REMOVE LIDS BEFORE POURING CONCRETE AROUND PULL BOXES.
3. PULL BOXES SHALL BE GROUTED PRIOR TO INSTALLATION OF CONDUCTORS, SLOPED TOWARD THE DRAIN HOLE. PLACE A LAYER OF ROOFING PAPER BETWEEN THE CRUSHED ROCK AND THE GROUT.
4. WRAP PULL BOX WITH ROOFING PAPER BEFORE BACKFILLING.
5. INSTALL A ONE–FOOT RING OF CONCRETE, FOUR INCHES DEEP, AROUND THE WRAPPED PULL BOXES INSTALLED IN DIRT OR GRASS AREAS, SLOPED TO DRAIN AWAY FROM THE PULL BOX.
6. PULL BOXES SHALL BE LEVELED TO FINISH GRADE.
7. PULL BOX COVERS SHALL BE EQUIPPED WITH HOLD DOWN BOLTS.
8. ALL PULL BOXES SHALL BE INSTALLED WITH EXTENSIONS.
9. THIS DRAWING IS REFERENCED IN DWG. E–01 GENERAL NOTES.

LIGHTING PULL BOX

NOT TO SCALE

2
–

PRELIMINARY 30% SUBMITTAL

0 1/2 1
IF THIS BAR DOES NOT MEASURE 1" THEN DRAWING IS NOT TO FULL SCALE

REV	DATE	DESCRIPTION	APPR

PROJECT ENGINEER | REG NUMBER | EXP DATE

AECOM
AECOM
1194 PACIFIC STREET, SUITE 204
SAN LUIS OBISPO, CA 93401
T 805.542.9840 F 805.542.9990
www.aecom.com

CITY OF EL PASO DE ROBLES
WATER TREATMENT PLANT PROJECT

ELECTRICAL DETAILS (3 OF 4)

DESIGNED:
DETAILED:
CHECKED:
APPROVED:
DATE: November 2012
AECOM PROJECT NO. 60264606
P.R. PROJECT NO.
CADD STDS. AECOM

E00-08
SHEET
- OF -

DWG: V:\PASO ROBLES\60264606-WTP\000 CAD\PLANSET\G-ELEC\E00-08.dwg Layout Name: E00-08 - Plotted by: Rodriguez, David Date: 11/28/2012 - 4:00 PM
XREFS: G-BD-PR IMAGES: CITY OF PASO LOGO_1.png

REF.	VOLTS	LAMPS COLOR ABBREV.	LAMPS NO.	LAMPS TYPE	LAMPS WATTS	LAMPS TUBE TYPE	LAMPS TOTAL WATTS	MOUNTING	DESCRIPTION	MANUF-ACTURERS CATALOG REF.
C	120	CW	2	F	32	T8	75	SURFACE	FLUORESCENT FIXTURE, WRAP AROUND ENCLOSURE, HOUSING FORMED FROM REINFORCED POLYESTER FIBERGLASS OR HIGH IMPACT ACRYLIC, STAINLESS-STEEL LATCHES, CLEAR PRISMATIC LEXAN LENS, SUITABLE FOR WET AND CORROSIVE LOCATIONS. UL LISTED. 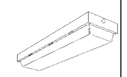	APPLETON FR SERIES LITHONIA DMW, APPLETON FR SERIES
F	208		1	CFL	42		50	WALL	DIE-CAST ALUMINUM REAR HOUSING. CAPTIVE EXTERNAL HARDWARE TREATED FOR CORROSION RESISTANCE . DARK BRONZE CORROSION-RESISTANT POLYESTER POWDER. ONE PIECE FRONT HOUSING AND REFRACTOR, INJECTION-MOLDED, UV-STABILIZED POLYCARBONATE. FRONT COVER SEALED WITH ONE-PIECE, HIGH-TEMPERATURE SILICONE GASKET. COMPACT FLUORESCENT LAMPS. UL LISTED SUITABLE FOR WET LOCATIONS	LITHONIA TWA
E	120		2	LED	5.4		11	WALL	SELF CONTAINED EXIT SIGN AND EMERGENCY LIGHT. HOUSING CONSTRUCTED OF IMPACT RESISTANT, UV STABLE, INJECTION MOLDED RLAME RETARDANT THERMOPLASTIC. 6 HIGH, 3/4" STROKE LETTERING. LED LAMPS FOR THE EXIT SIGN, 12 SERIES-PARALLEL WHITE LEDS IN EACH HEAD. THE EMERGENCY LIGHTS, MAINTENANCE FREE HIGH OUTPUT NI-CAD BATTERIES PROVIDING 90 MINUTE EMERGENCY LIGHTING, COMPLYING WITH NFPA & OSHA ILLUMINATION STANDARDS. BATTERY TEST SWITCH AND A CHARGE MONITOR INDICATOR LIGHT ON THE HOUSING. UL LISTED.	LITHONIA LHQM LED HO
J	208		1	MH	100		115	19' POLE	SHOE-BOX STYLE, HEAVY DUTY DIE CAST ALUMINUM HOUSING WITH CORROSION RESISTANT HARDWARE AND ALUMINUM FINISH. HEAT AND IMPACT RESISTANT TEMPERED FLAT GLASS LENS. . IES DISTRIBUTION TYPE MEDIUM CUTOFF TYPE III. ROUND TAPERED ALUMINUM POLE. IZOTACH ZONE OF NOT LESS THAN 110 MPHI. UL LISTED SUITABLE FOR WET LOCATIONS. 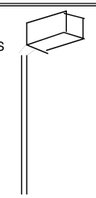	GE DSMT, LITHONIA KSF, RUUD PR

LIGHTING FIXTURE SCHEDULE

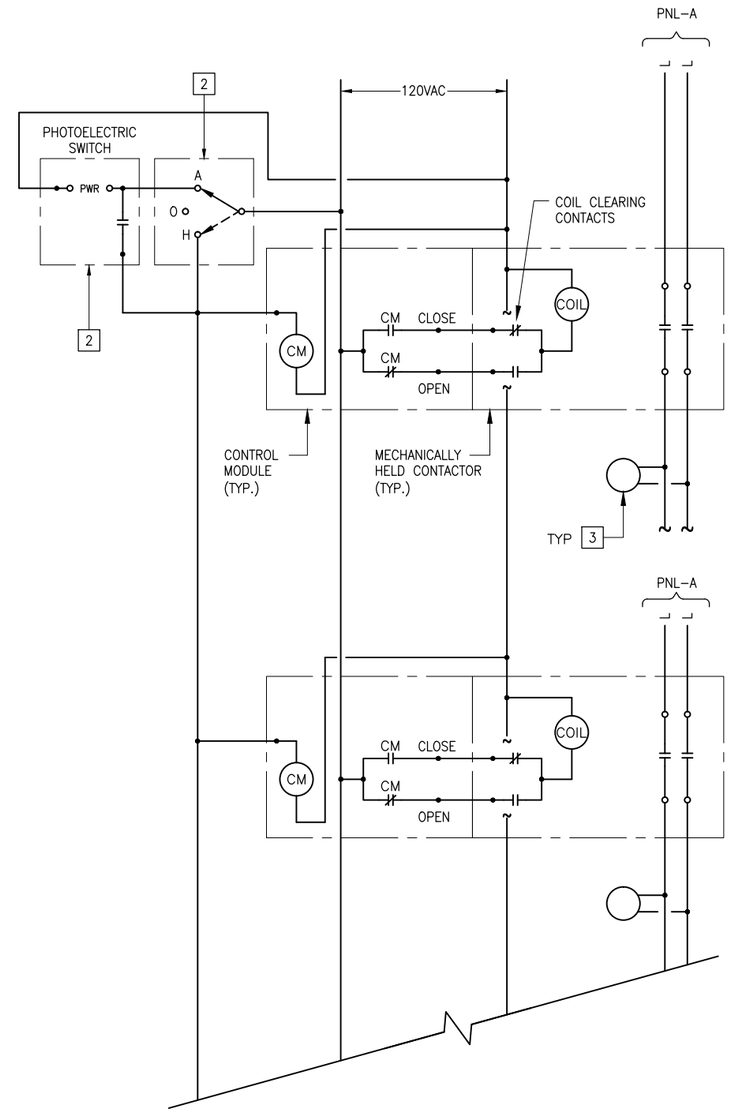

LIGHTING CONTROL PANEL WIRING DIAGRAM 1

1 / -

NOTES:

1. ALL COMPONENTS ARE PART OF THE LIGHTING CONTROL PANEL UON.
2. REMOTELY MOUNTED.
3. AREA LIGHTING.

PRELIMINARY 30% SUBMITTAL

0 1/2 1
IF THIS BAR DOES NOT MEASURE 1" THEN DRAWING IS NOT TO FULL SCALE

REV	DATE	DESCRIPTION	APPR

PROJECT ENGINEER | REG NUMBER | EXP DATE

AECOM
AECOM
1194 PACIFIC STREET, SUITE 204
SAN LUIS OBISPO, CA 93401
T 805.542.9840 F 805.542.9990
www.aecom.com

CITY OF EL PASO DE ROBLES
WATER TREATMENT PLANT PROJECT

ELECTRICAL DETAILS (4 OF 4)

DESIGNED:
DETAILED:
CHECKED:
APPROVED:
DATE: November 2012
AECOM PROJECT NO. 60264606
P.R. PROJECT NO.
CADD STDS. AECOM
E00-09
SHEET - OF -

DWG: V:\PASO ROBLES\60264606-WTP\000 CAD\PLANSET\6-ELEC\E00-09.dwg Layout Name: E00-09 - Plotted by: Rodriguez, David Date: 11/28/2012 - 4:00 PM
XREFS: G-BD-PR IMAGES: CITY OF PASO LOGO_1.png -

INTERNATIONAL SOCIETY OF AUTOMATION (ISA) TABLE

IDENTIFICATION LETTERS

	FIRST–LETTER		SUCCEEDING–LETTERS		
	MEASURED OR INITIATING VARIABLE	MODIFIER	READOUT OR PASSIVE FUNCTION	OUTPUT FUNCTION	MODIFIER
A	ANALYSIS		ALARM		
B	BURNER, COMBUSTION		USER'S CHOICE	USER'S CHOICE	USER'S CHOICE
C	CONDUCTIVITY			CONTROL	
D	USER'S CHOICE	DIFFERENTIAL			
E	VOLTAGE		SENSOR (PRIMARY ELEMENT)		
F	FLOW RATE	RATIO (FRACTION)			
G	USER'S CHOICE		GLASS, VIEWING DEVICE		
H	HAND				HIGH
I	CURRENT (ELECTRICAL)		INDICATE		
J	POWER	SCAN			
K	TIME, TIME SCHEDULE	TIME RATE OF CHANGE		CONTROL STATION	
L	LEVEL		LIGHT		LOW
M	USER'S CHOICE	MOMENTARY			MIDDLE, INTERMEDIATE
N	USER'S CHOICE		PLC/RTU INPUT	USER'S CHOICE	NORMAL
O	USER'S CHOICE		ORIFICE, RESTRICTION		
P	PRESSURE, VACUUM		POINT (TEST) CONNECTION		
Q	QUANTITY	INTEGRATE, TOTALIZE			
R	RADIATION		RECORD		
S	SPEED, FREQUENCY	SAFETY		SWITCH	
T	TEMPERATURE			TRANSMIT	
U	MULTIVARIABLE		MULTIFUNCTION	MULTIFUNCTION	MULTIFUNCTION
V	VIBRATION, MECHANICAL ANALYSIS			VALVE,DAMPER LOUVER	
W	WEIGHT, FORCE		WELL		
X	UNCLASSIFIED	X AXIS	UNCLASSIFIED(*)	UNCLASSIFIED(*)	UNCLASSIFIED(*)
Y	EVENT, STATE OR PRESENCE	Y AXIS		RELAY, COMPUTE CONVERT	
Z	POSITION, DIMENSION	Z AXIS		DRIVER, ACTUATOR, UNCLASSIFIED FINAL CONTROL ELEMENT	

INSTRUMENT LINE SYMBOLS

- PRIMARY PROCESS FLOW
- SECONDARY PROCESS FLOW, CONNECTION TO PROCESS FLOW, MECHANICAL LINK OR INSTRUMENT SUPPLY
- PNEUMATIC SIGNAL OR UNDEFINED SIGNAL FOR PROCESS FLOW DIAGRAMS
- CAPILLARY TUBING (FILLED SYSTEM)
- ELECTRIC SIGNAL (DISCRETE)
- A — ELECTRIC SIGNAL (ANALOG, TSP)
- A3 — ELECTRIC SIGNAL (ANALOG, TST)
- DATA COMMUNICATION
- BUILDING OR FACILITY BOUNDARY
- (2) — MULTI–CIRCUIT ELECTRIC SIGNALS (NUMBER OF SIGNALS ILLUSTRATED IN PARENTHESIS)
- I–5 01 — LOGICAL OR HARDWIRE SIGNAL NUMBER (SHOWN SIGNAL "01" ORIGINATED IN DWG. I–5)
- 01 I–5 — LOGICAL OR HARDWIRE SIGNAL NUMBER (SHOWN SIGNAL "01" SENT TO DWG. I–5)

VALVES & GATES

- BUTTERFLY
- GATE
- KNIFE GATE
- SWING CHECK
- BALL
- GLOBE
- DIAPHRAGM
- PLUG
- ECCENTRIC PLUG
- LUBRICATED PLUG
- 3–WAY GLOBE
- BALL CHECK
- PRESSURE RELIEF VAVLE
- PINCH VALVE
- CONCENTRIC REDUCER
- DRAIN
- M — MOTOR OPERATED BUTTERFLY
- PRESSURE REDUCING REGULATOR
- S — SOLENOID CONTROL
- S — 3–WAY SOLENOID
- NEEDLE VALVE
- PINCH VALVE
- DIAPHRAGM ACTUATED
- PRESSURE RELIEF
- EDUCTOR
- SECONDARY PROCESS DIAPHRAGM SEAL
- TELESCOPE VALVE
- PRESSURE/VACUUM SAFETY VALVE
- AIR TO OPEN– SPRING TO CLOSE PISTON/CYLINDER TYPE AIR ACTUATOR (AO/SC)

ACTUATORS OR OPERATORS

- M — MOTOR
- S — SOLENOID
- G — GEARBOX

INSTRUMENT IDENTIFICATION

FIT 01–0

- FIRST LETTER
- SUCCEEDING LETTERS
- LOOP NO. MODIFIER (USED WITH TWO OR MORE INSTRUMENTS HAVING THE SAME FUNCTIONAL LOOP IDENTIFICATION)
- LOOP NO.

- FIELD MOUNTED INSTRUMENT
- REAR OF PANEL MOUNTED INSTRUMENT
- FRONT OF PANEL MOUNTED INSTRUMENT
- ILLUMINATED HANDSWITCH
- PLC (PROGRAMMABLE LOGIC CONTROLLER)
- SCS (SUPERVISORY CONTROL STATION)
- INTERLOCK

PUMPS & COMPRESSORS

- CENTRIFUGAL PUMP
- VERTICAL TURBINE PUMP
- COMPRESSOR OR BLOWER
- SUMP PUMP

PRIMARY ELEMENTS

- ULTRASONIC LEVEL SENSOR
- FLOW TUBE
- V — V–CONE FLOW METER
- 8 — PROPELLER METER
- M — MAGNETIC FLOW METER
- FLOOD SWITCH

INSTRUMENT ABBREVIATIONS

AC	ALTERNATING CURRENT
AI	ANALOG INPUT
AL	ALARM
AO	ANALOG OUTPUT
AM	AUTO–MANUAL
BW	BACKWASH
C	CLOSE
CCC	CENTRAL CONTROL CENTER
COMP	COMPOUND
DC	DIRECT CURRENT
DI	DISCRETE INPUT
DO	DISCRETE OUTPUT
ETM	ELAPSED TIME METER
FO	FIBER OPTIC
FOPP	FIBER OPTIC PATCH PANEL
HL	HIGH–LOW
HLO	HIGH–LOW–OFF
HLOR	HIGH–LOW–OFF–REMOTE
HOA	HAND–OFF–AUTO
I/O	INPUT/OUTPUT
LCP	LOCAL CONTROL PANEL
LL	LOCAL LEVEL
LP	LOCAL PRESSURE
LOS	LOCK–OUT–STOP
LOR	LOCAL–OFF–REMOTE
LPU	LINE PROTECTION UNIT
LR	LOCAL–REMOTE
MCC	MOTOR CONTROL CENTER
MCS	MASTER CONTROL STATION
MODEM	MODULATE–DEMODULATE
NIC	NOT IN CONTRACT
O	OPEN
OC	OPEN–CLOSE
OCA	OPEN–CLOSE–AUTO
OIC	OPEN–INTERMEDIATE–CLOSED
OO	ON–OFF
OOA	ON–OFF–AUTO
OOR	ON–OFF–REMOTE
ORO	OFF–RESET–ON
OSC	OPEN–STOP–CLOSE
OSCA	OPEN–STOP–CLOSE–AUTO
OSCR	OPEN–STOP–CLOSE–REMOTE
P/A	PULSE TO ANALOG
P&ID	PROCESS & INSTRUMENTATION DIAGRAM
PID	PROPORTIONAL–INTEGRAL–DERIVATIVE
PRV	PRESSURE RELIEF VALVE
PS	DC POWER SUPPLY
PZR	POSITIVE ZERO RETURN
RIOP	REMOTE I/O PANEL
RSP	REMOTE SET POINT
RTD	RESISTANCE TEMPERATURE DETECTOR
RTDI	RTD INPUT MODULE
RTU	REMOTE TERMINAL UNIT
SCS	SUPERVISORY CONTROL STATION
SP	SET POINT
SS	START–STOP
TEMP	TEMPERATURE
TOT	TOTALIZATION
TPC	TIME PROPORTIONAL CONTROL
TSP	TWISTED SHIELDED PAIR
TST	TWISTED SHIELDED TRIAD
TURB	TURBIDITY

PRELIMINARY 30% SUBMITTAL

0 1/2 1
IF THIS BAR DOES NOT MEASURE 1" THEN DRAWING IS NOT TO FULL SCALE

REV	DATE	PROJECT ENGINEER	REG NUMBER	DESCRIPTION	EXP DATE	APPR

AECOM
AECOM
1194 PACIFIC STREET, SUITE 204
SAN LUIS OBISPO, CA 93401
T 805.542.9840 F 805.542.9990
www.aecom.com

CITY OF EL PASO DE ROBLES
WATER TREATMENT PLANT PROJECT

INSTRUMENTATION LEGEND AND SYMBOLS

DESIGNED:
DETAILED:
CHECKED:
APPROVED:
DATE: November 2012
AECOM PROJECT NO. 60264606
P.R. PROJECT NO.
CADD STDS. AECOM

N00-01
SHEET - OF -

DWG: V:\PASO ROBLES\60264606-WTP\000 CAD\PLANSET\5-INSTR\N00-01.dwg Layout Name: N-1 – Plotted by: Rodriguez, David Date: 11/28/2012 – 4:05 PM
XREFS: G-BD-PR IMAGES: CITY OF PASO LOGO_1.png –

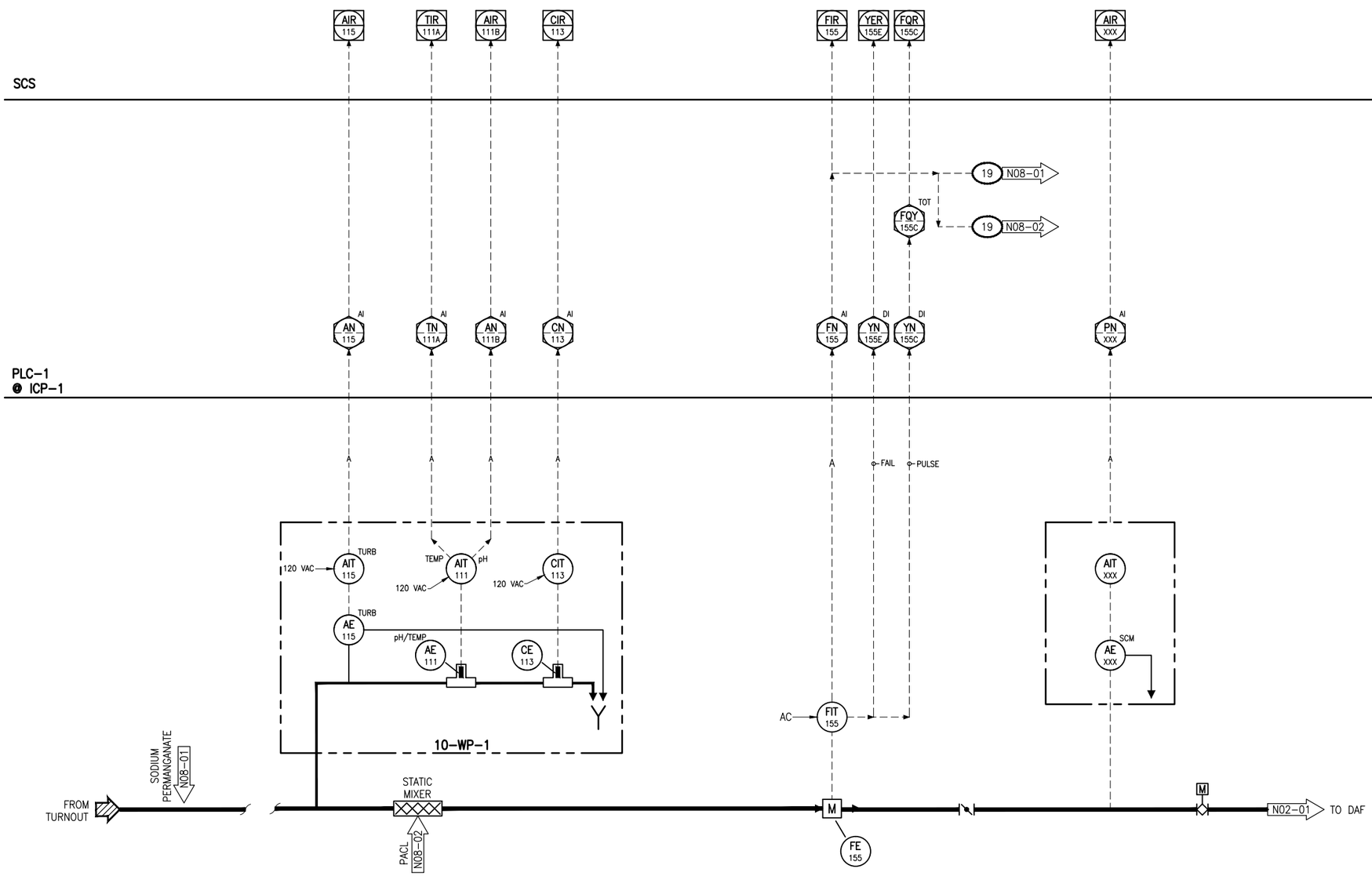

REV	DATE	DESCRIPTION	APPR

PROJECT ENGINEER | REG NUMBER | EXP DATE

AECOM
AECOM
1194 PACIFIC STREET, SUITE 204
SAN LUIS OBISPO, CA 93401
T 805.542.9840 F 805.542.9990
www.aecom.com

CITY OF EL PASO DE ROBLES
WATER TREATMENT PLANT PROJECT

TURNOUT P&ID

DESIGNED:
DETAILED:
CHECKED:
APPROVED:
DATE: November 2012

AECOM PROJECT NO.
60264606

P.R. PROJECT NO.

CADD STDS.
AECOM

N01-01
SHEET
- OF -

PRELIMINARY
30% SUBMITTAL

0 1/2 1
IF THIS BAR DOES NOT MEASURE 1" THEN DRAWING IS NOT TO FULL SCALE

DWG: V:\PASO ROBLES\60264606-WTP\000 CAD\PLANSET\5-INSTR\N01-01.dwg Layout Name: 34x22 - Plotted by: Rodriguez, David Date: 11/28/2012 - 4:03 PM
XREFS: C-BD-PR IMAGES: CITY OF PASO LOGO_1.png -

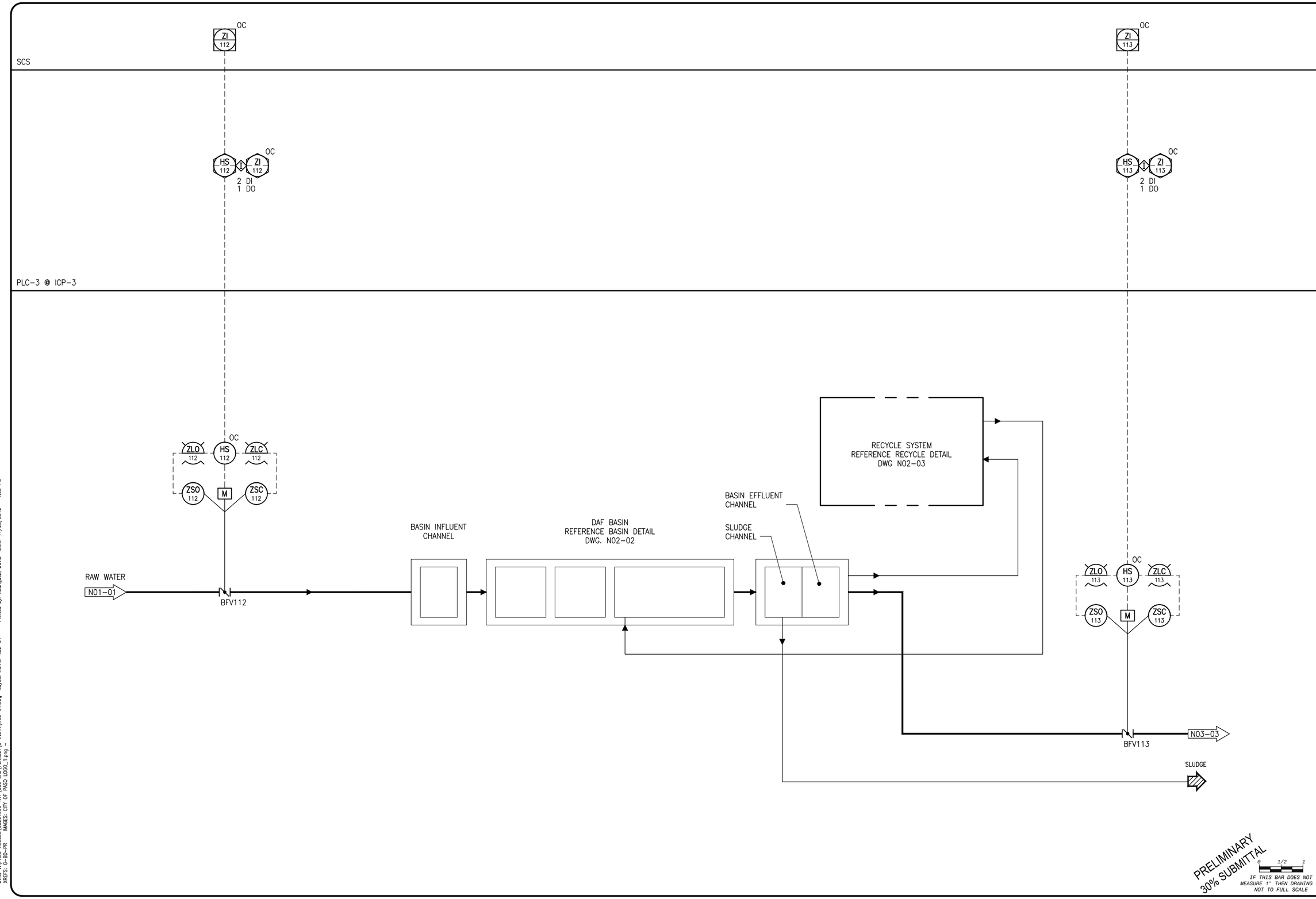

PRELIMINARY
30% SUBMITTAL

0 1/2 1
IF THIS BAR DOES NOT MEASURE 1" THEN DRAWING IS NOT TO FULL SCALE

REV	DATE	DESCRIPTION	APPR
1			
2			
3			
4			

PROJECT ENGINEER | REG NUMBER | EXP DATE

AECOM
AECOM
1194 PACIFIC STREET, SUITE 204
SAN LUIS OBISPO, CA 93401
T 805.542.9840 F 805.542.9990
www.aecom.com

CITY OF EL PASO DE ROBLES
WATER TREATMENT PLANT PROJECT

PROCESS 20
DISSOLVED AIR FLOATATION P&ID-1

DESIGNED:
DETAILED:
CHECKED:
APPROVED:
DATE: November 2012
AECOM PROJECT NO. 60264606
P.R. PROJECT NO.
CADD STDS. AECOM

N02-01
SHEET
- OF -

DWG: V:\PASO ROBLES\60264606-WTP\000 CAD\PLANSET\5-INSTR\N02-01.dwg Layout Name: N02-01 - Plotted by: Rodriguez, David Date: 11/28/2012 - 4:03 PM
XREFS: C-BD-PR IMAGES: CITY OF PASO LOGO_1.png -

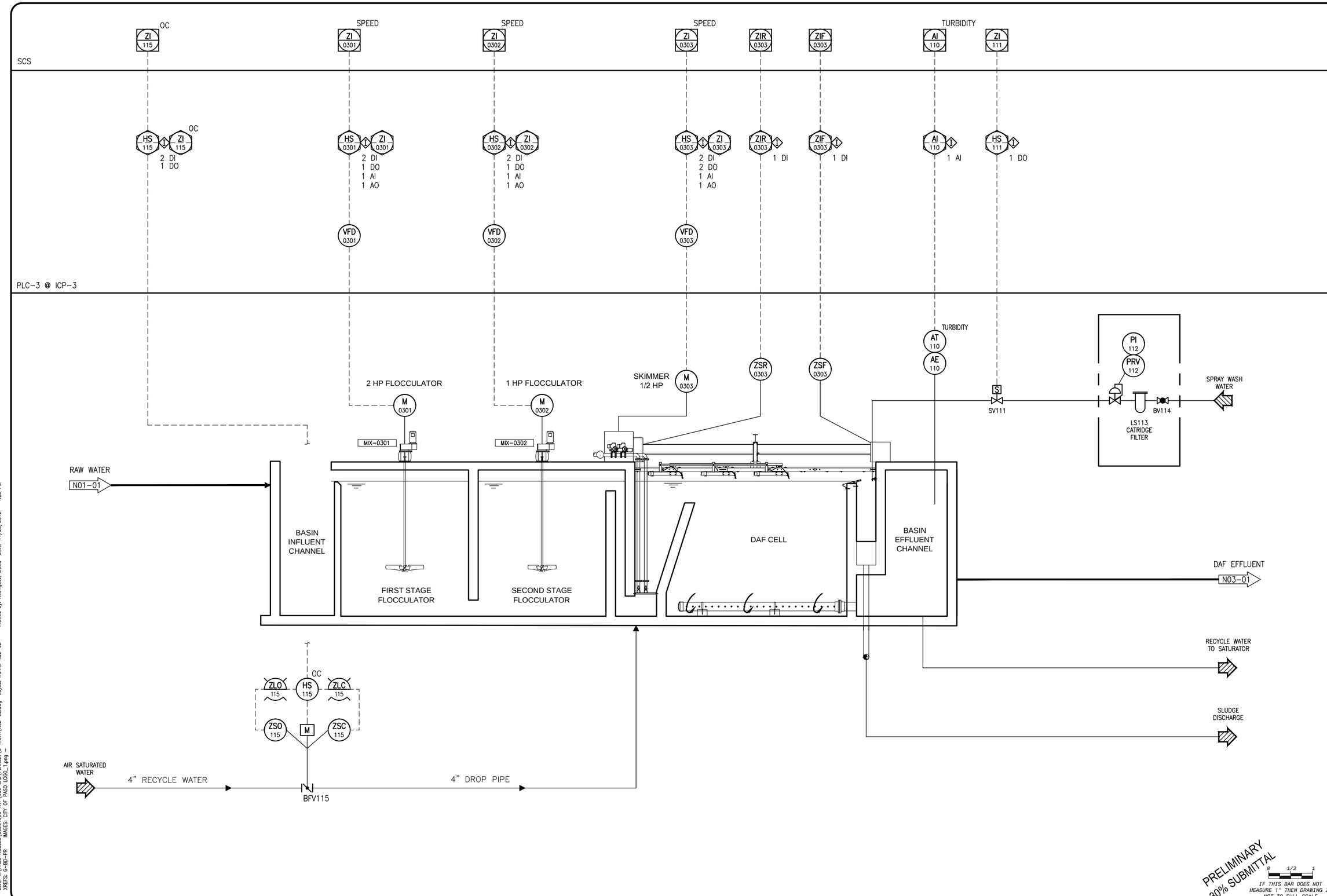

PRELIMINARY
30% SUBMITTAL

IF THIS BAR DOES NOT MEASURE 1" THEN DRAWING IS NOT TO FULL SCALE

REV	DATE	DESCRIPTION	APPR

PROJECT ENGINEER | REG NUMBER | EXP DATE

AECOM
AECOM
1194 PACIFIC STREET, SUITE 204
SAN LUIS OBISPO, CA 93401
T 805.542.9840 F 805.542.9990
www.aecom.com

CITY OF EL PASO DE ROBLES
WATER TREATMENT PLANT PROJECT

PROCESS 20
DISSOLVED AIR FLOATATION P&ID-2

DESIGNED:
DETAILED:
CHECKED:
APPROVED:
DATE: November 2012
AECOM PROJECT NO. 60264606
P.R. PROJECT NO.
CADD STDS. AECOM

N02-02
SHEET
- OF -

DWG: V:\PASO ROBLES\60264606-WTP\000 CAD\PLANSET\5-INSTR\N02-02.dwg Layout Name: N02-02 - Plotted by: Rodriguez, David Date: 11/28/2012 - 4:03 PM
XREFS: G-BD-PR IMAGES: CITY OF PASO LOGO_1.png -

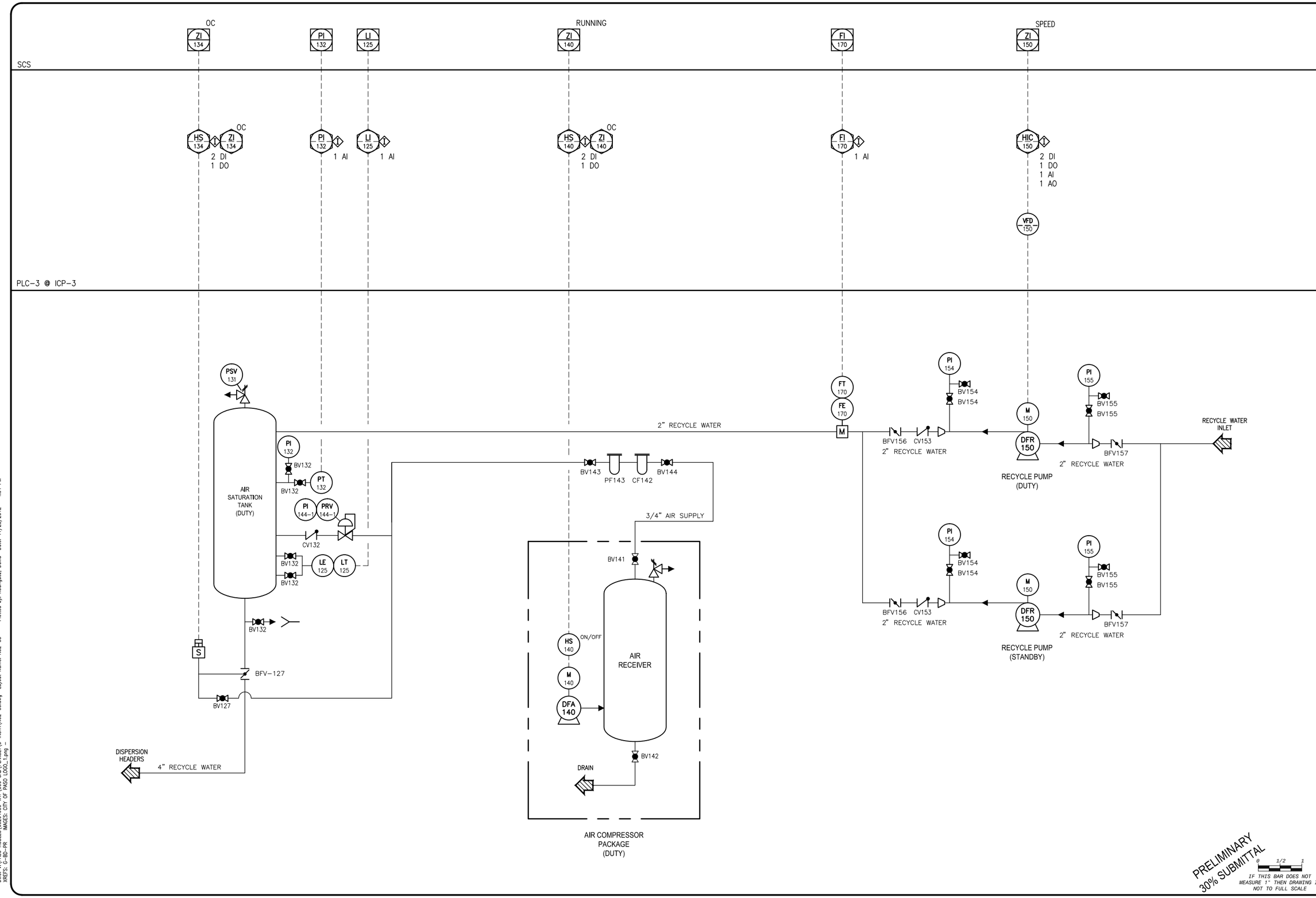

PRELIMINARY
30% SUBMITTAL

0 1/2 1
IF THIS BAR DOES NOT MEASURE 1" THEN DRAWING IS NOT TO FULL SCALE

REV	DATE	DESCRIPTION	APPR

PROJECT ENGINEER | REG NUMBER | EXP DATE

AECOM
AECOM
1194 PACIFIC STREET, SUITE 204
SAN LUIS OBISPO, CA 93401
T 805.542.9840 F 805.542.9990
www.aecom.com

CITY OF EL PASO DE ROBLES
WATER TREATMENT PLANT PROJECT

PROCESS 20
DISSOLVED AIR FLOATATION P&ID-3

DESIGNED:
DETAILED:
CHECKED:
APPROVED:
DATE: November 2012
AECOM PROJECT NO. 60264606
P.R. PROJECT NO.
CADD STDS. AECOM

N02-03
SHEET
- OF -

DWG: V:\PASO ROBLES\60264606-WTP\000 CAD\PLANSET\5-INSTR\N02-03.dwg Layout Name: N02-03 - Plotted by: Rodriguez, David Date: 11/28/2012 - 4:04 PM
XREFS: G-BD-PR IMAGES: CITY OF PASO LOGO_1.png -

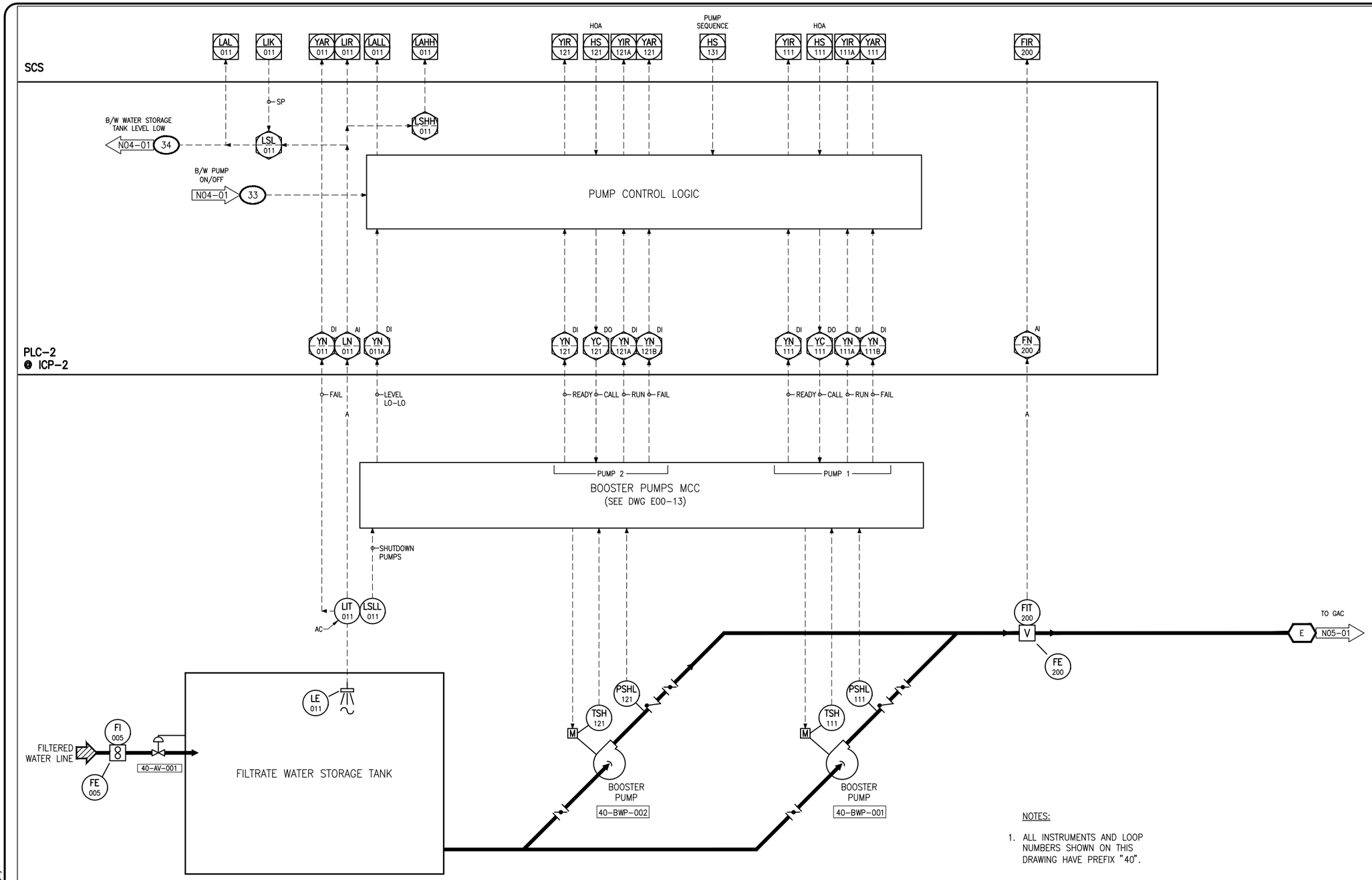

NOTES:

1. ALL INSTRUMENTS AND LOOP NUMBERS SHOWN ON THIS DRAWING HAVE PREFIX "40".

PRELIMINARY
30% SUBMITTAL

0 1/2 1
IF THIS BAR DOES NOT MEASURE 1" THEN DRAWING IS NOT TO FULL SCALE

REV	DATE	DESCRIPTION	APPR
4			
3			
2			
1			

PROJECT ENGINEER | REG NUMBER | EXP DATE

AECOM
AECOM
1194 PACIFIC STREET, SUITE 204
SAN LUIS OBISPO, CA 93401
T 805.542.9840 F 805.542.9990
www.aecom.com

CITY OF EL PASO DE ROBLES
WATER TREATMENT PLANT PROJECT

BOOSTER PUMP STATION P & ID

DESIGNED:
DETAILED:
CHECKED:
APPROVED:
DATE: November 2012
AECOM PROJECT NO. 60264606
~~P.R. PROJECT NO.~~
CADD STDS. AECOM

N04-01
SHEET
- OF -

DWG: V:\PASO ROBLES\60264606-WTP\000 CAD\PLANSET\5-INSTR\N04-01.dwg Layout Name: 34x22 - Plotted by: Rodriguez, David Date: 11/28/2012 - 4:04 PM
XREFS: G-BD-PR IMAGES: CITY OF PASO LOGO_1.png -

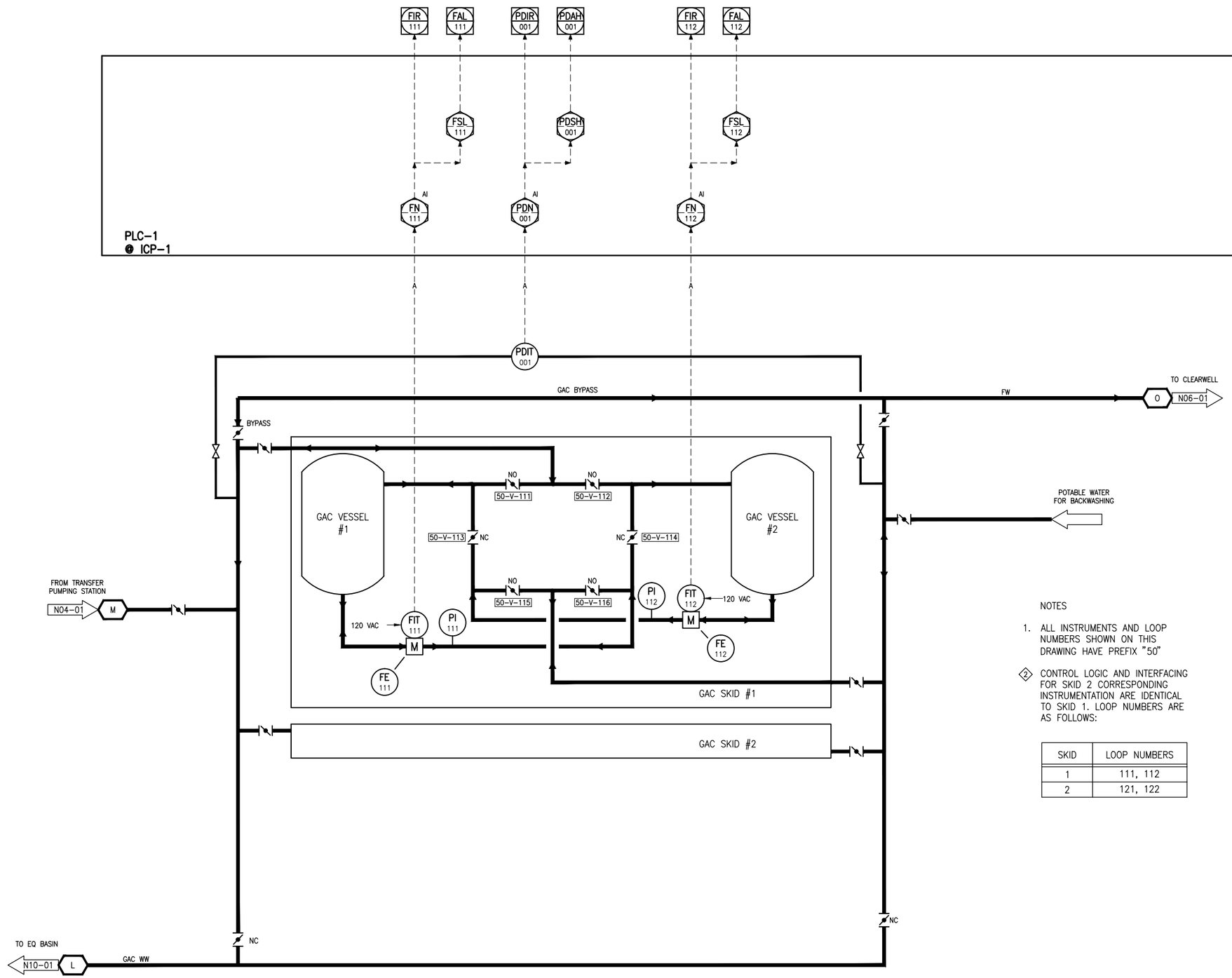

NOTES

1. ALL INSTRUMENTS AND LOOP NUMBERS SHOWN ON THIS DRAWING HAVE PREFIX "50"

2. CONTROL LOGIC AND INTERFACING FOR SKID 2 CORRESPONDING INSTRUMENTATION ARE IDENTICAL TO SKID 1. LOOP NUMBERS ARE AS FOLLOWS:

SKID	LOOP NUMBERS
1	111, 112
2	121, 122

PRELIMINARY 30% SUBMITTAL

0 1/2 1

IF THIS BAR DOES NOT MEASURE 1" THEN DRAWING IS NOT TO FULL SCALE

REV	DATE	DESCRIPTION	APPR

PROJECT ENGINEER | REG NUMBER | EXP DATE

AECOM
1194 PACIFIC STREET, SUITE 204
SAN LUIS OBISPO, CA 93401
T 805.542.9840 F 805.542.9990
www.aecom.com

CITY OF EL PASO DE ROBLES
WATER TREATMENT PLANT PROJECT

PROCESS 50
GAC SYSTEM P&ID

DESIGNED:
DETAILED:
CHECKED:
APPROVED:
DATE: November 2012
AECOM PROJECT NO. 60264606
P.R. PROJECT NO.
CADD STDS. AECOM

N05-01
SHEET
- OF -

DWG: V:\PASO ROBLES\60264606-WTP\000 CAD\PLANSET\5-INSTR\N05-01.dwg Layout Name: 34x22 - Plotted by: Rodriguez, David Date: 11/28/2012 - 4:04 PM
XREFS: G-BD-PR IMAGES: CITY OF PASO LOGO_1.png -

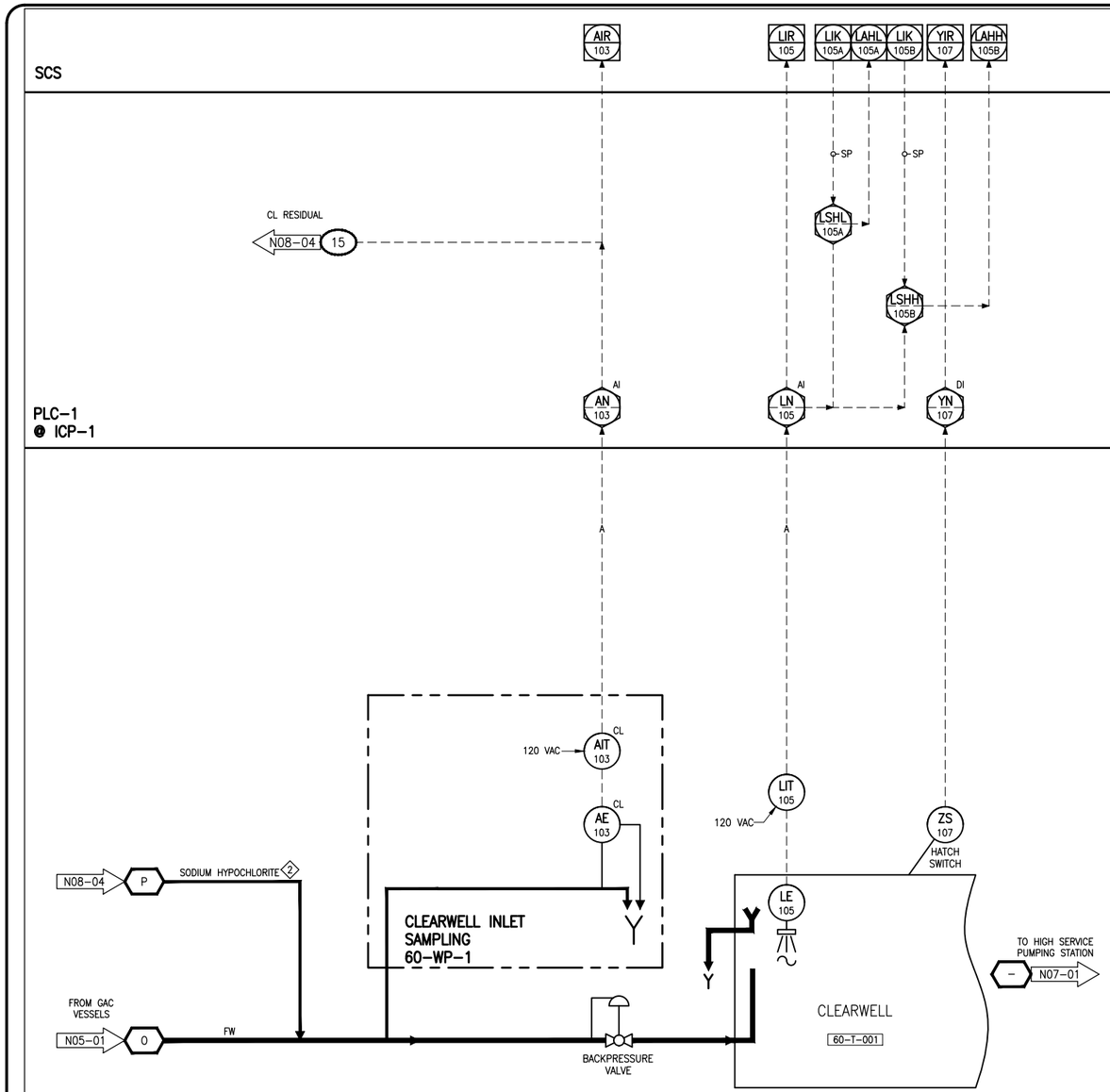

NOTES

1. ALL INSTRUMENTS AND LOOP NUMBERS SHOWN ON THIS DRAWING HAVE PREFIX "60"

2 INJECTED AT GAC PROCESS DISCHARGE

PRELIMINARY
30% SUBMITTAL

0 1/2 1
IF THIS BAR DOES NOT MEASURE 1" THEN DRAWING IS NOT TO FULL SCALE

REV	DATE	DESCRIPTION	APPR

PROJECT ENGINEER | REG NUMBER | EXP DATE

AECOM
AECOM
1194 PACIFIC STREET, SUITE 204
SAN LUIS OBISPO, CA 93401
T 805.542.9840 F 805.542.9990
www.aecom.com

CITY OF EL PASO DE ROBLES
WATER TREATMENT PLANT PROJECT

PROCESS 60
CLEARWELL P&ID

DESIGNED:
DETAILED:
CHECKED:
APPROVED:
DATE: November 2012
AECOM PROJECT NO. 60264606
P.R. PROJECT NO.
CADD STDS. AECOM

N06-01
SHEET
- OF -

DWG: V:\PASO ROBLES\60264606-WTP\000 CAD\PLANSET\5-INSTR\N06-01.dwg Layout Name: 34x22 - Plotted by: Rodriguez, David Date: 11/28/2012 - 4:04 PM
XREFS: C-BD-PR IMAGES: CITY OF PASO LOGO_1.png -

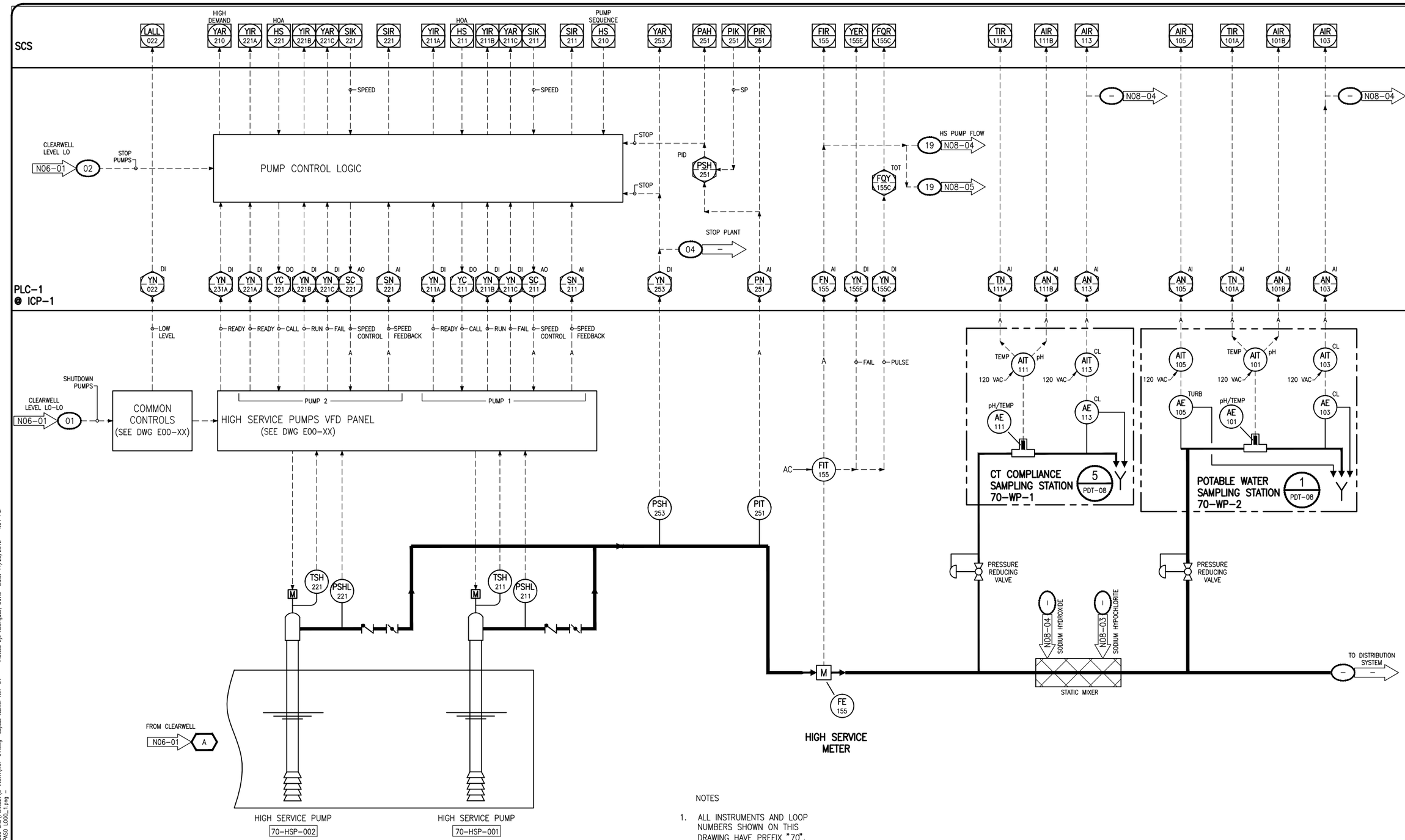

NOTES

1. ALL INSTRUMENTS AND LOOP NUMBERS SHOWN ON THIS DRAWING HAVE PREFIX "70".

PRELIMINARY 30% SUBMITTAL

IF THIS BAR DOES NOT MEASURE 1" THEN DRAWING IS NOT TO FULL SCALE

REV	DATE	DESCRIPTION	APPR

PROJECT ENGINEER | REG NUMBER | EXP DATE

AECOM
1194 PACIFIC STREET, SUITE 204
SAN LUIS OBISPO, CA 93401
T 805.542.9840 F 805.542.9990
www.aecom.com

CITY OF EL PASO DE ROBLES
WATER TREATMENT PLANT PROJECT

PROCESS 70
HIGH SERVICE PUMP STATION P&ID

DESIGNED:
DETAILED:
CHECKED:
APPROVED:
DATE: November 2012
AECOM PROJECT NO. 60264606
P.R. PROJECT NO.
CADD STDS. AECOM

N07-01
SHEET
- OF -

DWG: V:\PASO ROBLES\60264606-WTP\000 CAD\PLANSET\5-INSTR\N07-01.dwg Layout Name: N07-01 - Plotted by: Rodriguez, David Date: 11/28/2012 - 4:04 PM
XREFS: C-BD-PR IMAGES: CITY OF PASO LOGO_1.png -

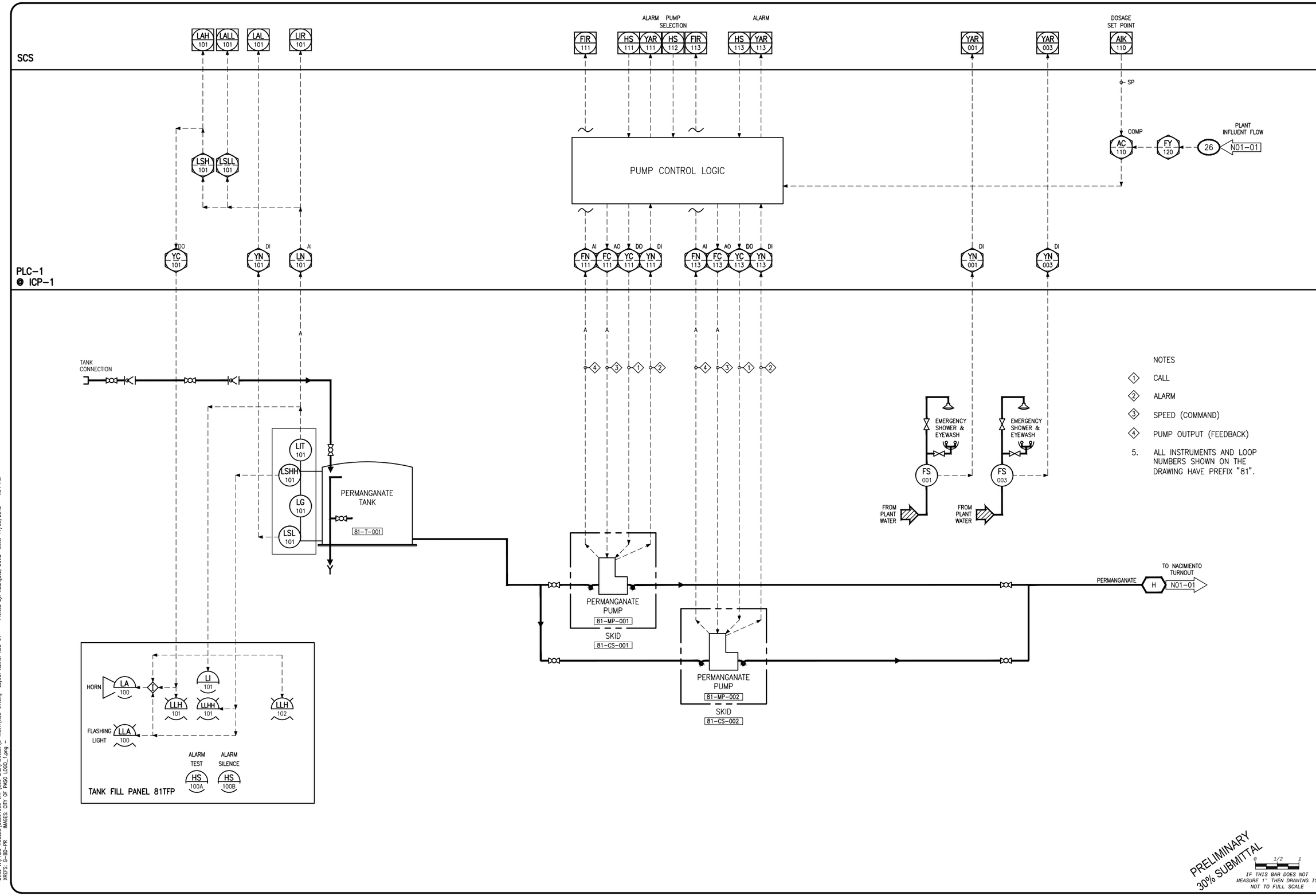
SCS
PLC-1
@ ICP-1
LAH 101
LALL 101
LAL 101
LIR 101
LSH 101
LSLL 101
YC 101
YN 101
LN 101
FIR 111
HS 111
YAR 111
HS 112
FIR 113
HS 113
YAR 113
ALARM
PUMP SELECTION
ALARM
PUMP CONTROL LOGIC
FN 111
FC 111
YC 111
YN 111
FN 113
FC 113
YC 113
YN 113
YAR 001
YAR 003
YN 001
YN 003
DOSAGE SET POINT
AIK 110
SP
COMP
AC 110
FY 120
26
PLANT INFLUENT FLOW
N01-01
TANK CONNECTION
LIT 101
LSHH 101
LG 101
LSL 101
PERMANGANATE TANK
81-T-001
EMERGENCY SHOWER & EYEWASH
FS 001
FS 003
FROM PLANT WATER
PERMANGANATE PUMP
81-MP-001
SKID
81-CS-001
PERMANGANATE PUMP
81-MP-002
SKID
81-CS-002
PERMANGANATE
H
TO NACIMIENTO TURNOUT
N01-01
HORN
LA 100
LLA 100
FLASHING LIGHT
LI 101
LLH 101
LLHH 101
LLH 102
ALARM TEST
HS 100A
ALARM SILENCE
HS 100B
TANK FILL PANEL 81TFP
NOTES
1 CALL
2 ALARM
3 SPEED (COMMAND)
4 PUMP OUTPUT (FEEDBACK)
5. ALL INSTRUMENTS AND LOOP NUMBERS SHOWN ON THE DRAWING HAVE PREFIX "81".
PRELIMINARY 30% SUBMITTAL
IF THIS BAR DOES NOT MEASURE 1" THEN DRAWING IS NOT TO FULL SCALE
AECOM
AECOM
1194 PACIFIC STREET, SUITE 204
SAN LUIS OBISPO, CA 93401
T 805.542.9840 F 805.542.9990
www.aecom.com
CITY OF EL PASO DE ROBLES
WATER TREATMENT PLANT PROJECT
PROCESS 81
PERMANGANATE FEED SYSTEM P&ID
DESIGNED:
DETAILED:
CHECKED:
APPROVED:
DATE: November 2012
AECOM PROJECT NO.
60264606
P.R. PROJECT NO.
CADD STDS.
AECOM
N08-01
SHEET
- OF -
REV DATE DESCRIPTION APPR
PROJECT ENGINEER REG NUMBER EXP DATE
DWG: V:\PASO ROBLES\60264606-WTP\000 CAD\PLANSET\5-INSTR\N08-01.dwg Layout Name: N08-01 - Plotted by: Rodriguez, David Date: 11/28/2012 - 4:04 PM
XREFS: G-BD-PR IMAGES: CITY OF PASO LOGO_1.png

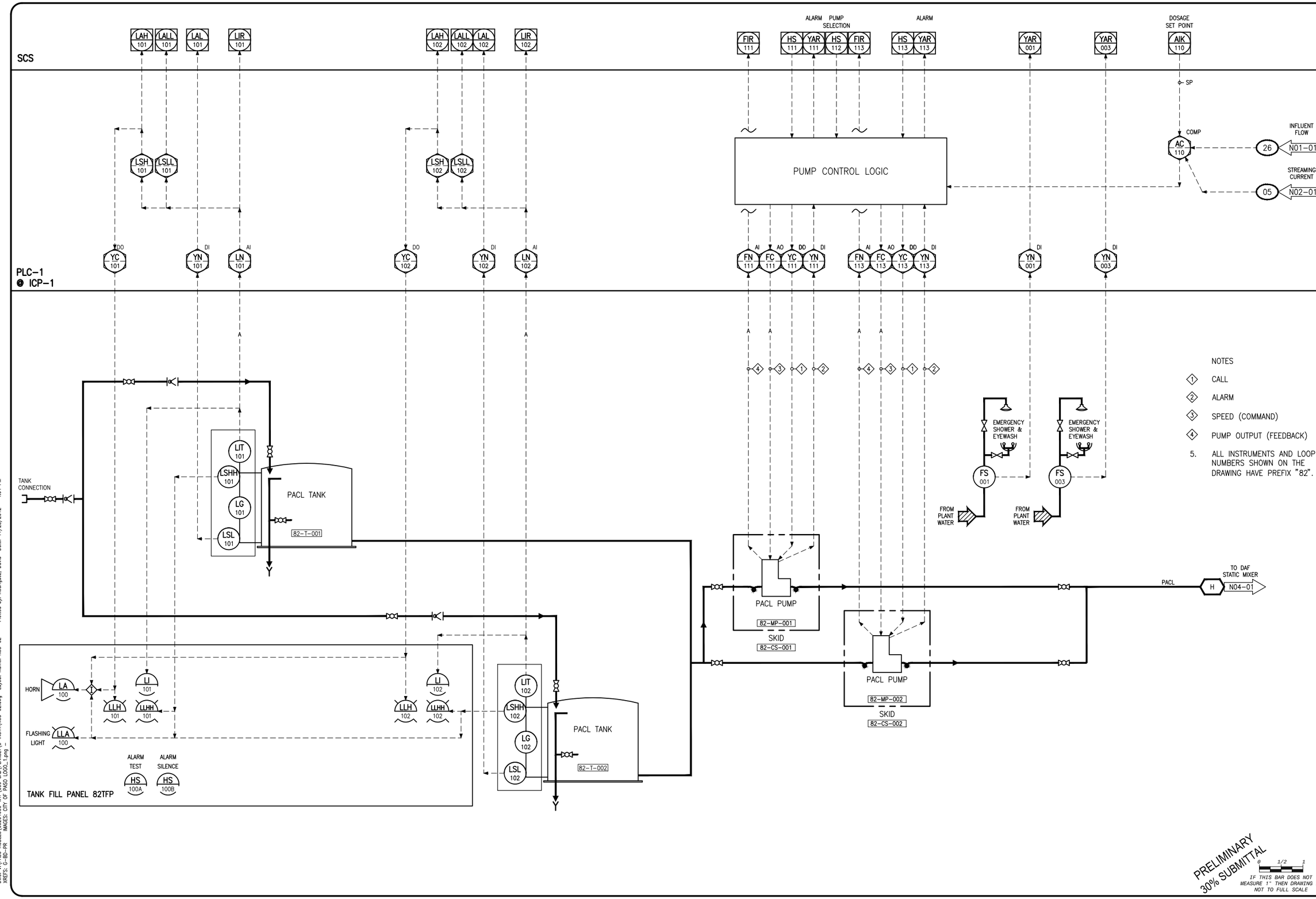

NOTES

1. CALL
2. ALARM
3. SPEED (COMMAND)
4. PUMP OUTPUT (FEEDBACK)
5. ALL INSTRUMENTS AND LOOP NUMBERS SHOWN ON THE DRAWING HAVE PREFIX "82".

PRELIMINARY 30% SUBMITTAL

0 1/2 1

IF THIS BAR DOES NOT MEASURE 1" THEN DRAWING IS NOT TO FULL SCALE

REV	DATE	DESCRIPTION	APPR

PROJECT ENGINEER | REG NUMBER | EXP DATE

AECOM
AECOM
1194 PACIFIC STREET, SUITE 204
SAN LUIS OBISPO, CA 93401
T 805.542.9840 F 805.542.9990
www.aecom.com

CITY OF EL PASO DE ROBLES

CITY OF EL PASO DE ROBLES
WATER TREATMENT PLANT PROJECT

PROCESS 82
PACL FEED SYSTEM P&ID

DESIGNED:
DETAILED:
CHECKED:
APPROVED:
DATE: November 2012
AECOM PROJECT NO. 60264606
P.R. PROJECT NO.
CADD STDS. AECOM

N08-02
SHEET
- OF -

DWG: V:\PASO ROBLES\60264606-WTP\000 CAD\PLANSET\5-INSTR\N08-02.dwg Layout Name: N08-02 - Plotted by: Rodriguez, David Date: 11/28/2012 - 4:04 PM
XREFS: G-BD-PR IMAGES: CITY OF PASO LOGO_1.png -

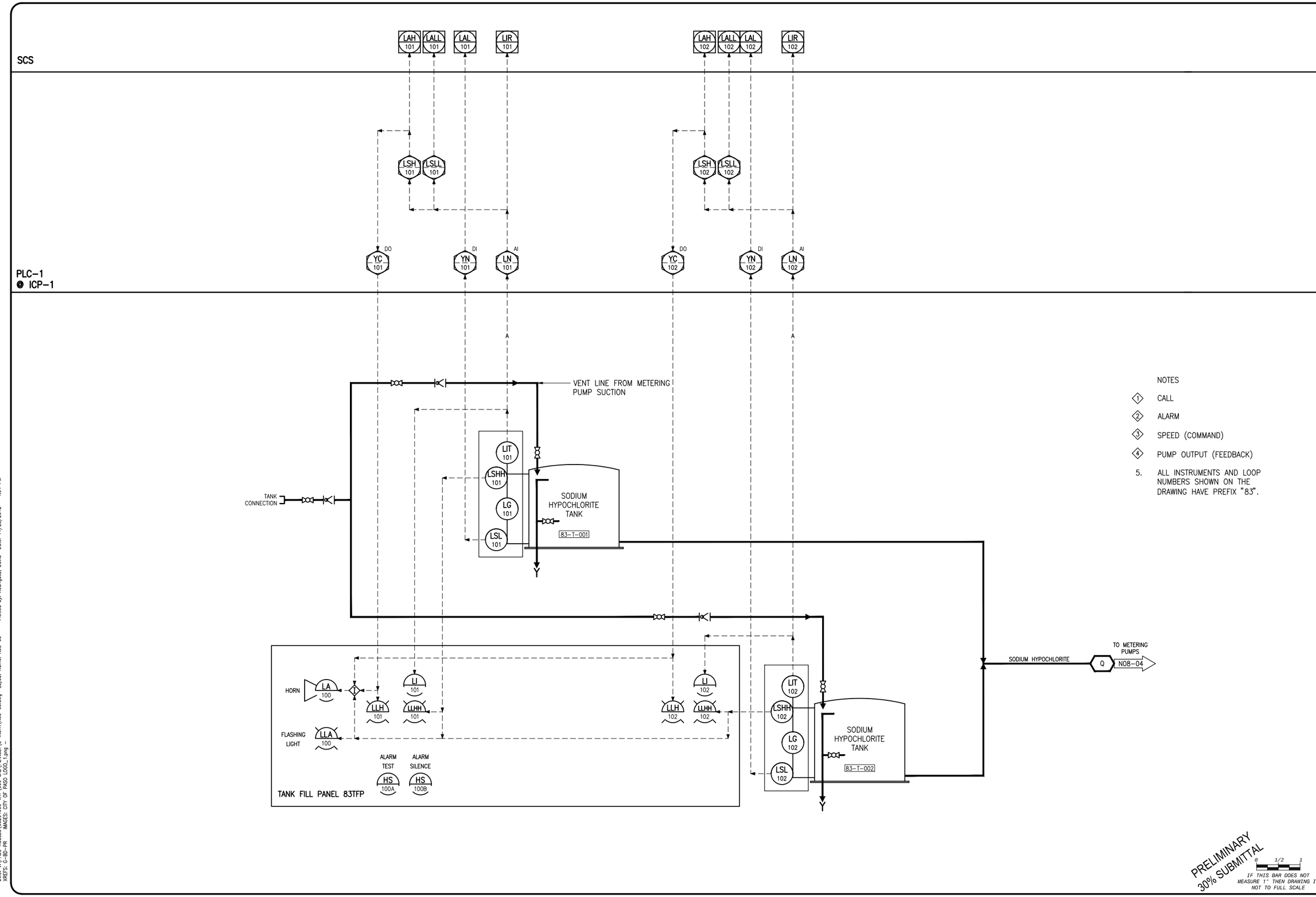
SCS
PLC-1
@ ICP-1
LAH 101
LALL 101
LAL 101
LIR 101
LAH 102
LALL 102
LAL 102
LIR 102
LSH 101
LSLL 101
LSH 102
LSLL 102
YC 101
YN 101
LN 101
YC 102
YN 102
LN 102
DO
DI
AI
A
VENT LINE FROM METERING PUMP SUCTION
TANK CONNECTION
LIT 101
LSHH 101
LG 101
LSL 101
SODIUM HYPOCHLORITE TANK
83-T-001
Y
SODIUM HYPOCHLORITE
TO METERING PUMPS
Q
N08-04
HORN
LA 100
FLASHING LIGHT
LLA 100
LLH 101
LLHH 101
LI 101
LLH 102
LLHH 102
LI 102
LIT 102
LSHH 102
LG 102
LSL 102
SODIUM HYPOCHLORITE TANK
83-T-002
ALARM TEST
ALARM SILENCE
HS 100A
HS 100B
TANK FILL PANEL 83TFP
NOTES
1 CALL
2 ALARM
3 SPEED (COMMAND)
4 PUMP OUTPUT (FEEDBACK)
5. ALL INSTRUMENTS AND LOOP NUMBERS SHOWN ON THE DRAWING HAVE PREFIX "83".
PRELIMINARY 30% SUBMITTAL
0 1/2 1
IF THIS BAR DOES NOT MEASURE 1" THEN DRAWING IS NOT TO FULL SCALE
REV DATE DESCRIPTION APPR
PROJECT ENGINEER REG NUMBER EXP DATE
AECOM
AECOM
1194 PACIFIC STREET, SUITE 204
SAN LUIS OBISPO, CA 93401
T 805.542.9840 F 805.542.9990
www.aecom.com
CITY OF EL PASO DE ROBLES
INCORPORATED 1889
CITY OF EL PASO DE ROBLES
WATER TREATMENT PLANT PROJECT
PROCESS 83 SYSTEM P&ID-1
SODIUM HYPOCHLORITE FEED
DESIGNED:
DETAILED:
CHECKED:
APPROVED:
DATE: November 2012
AECOM PROJECT NO.
60264606
P.R. PROJECT NO.
CADD STDS.
AECOM
N08-03
SHEET
- OF -
DWG: \\PASO ROBLES\60264606-WTP\000 CAD\PLANSET\5-INSTR\N08-03.dwg Layout Name: N08-03 - Plotted by: Rodriguez, David Date: 11/28/2012 - 4:04 PM
XREFS: G-BD-PR IMAGES: CITY OF PASO LOGO_1.png

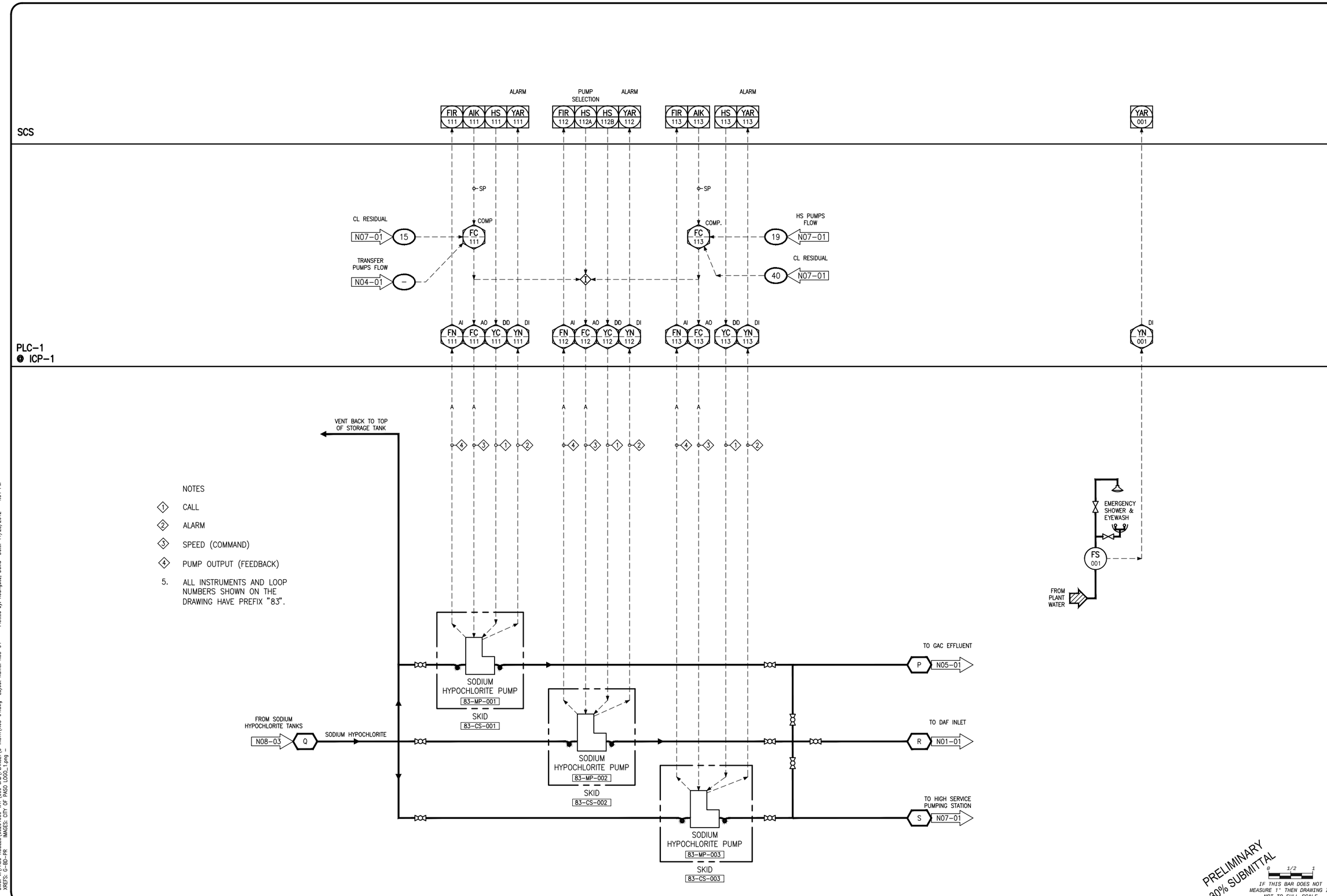

PRELIMINARY
30% SUBMITTAL

IF THIS BAR DOES NOT MEASURE 1" THEN DRAWING IS NOT TO FULL SCALE

REV	DATE	DESCRIPTION	APPR

PROJECT ENGINEER | REG NUMBER | EXP DATE

AECOM

AECOM
1194 PACIFIC STREET, SUITE 204
SAN LUIS OBISPO, CA 93401
T 805.542.9840 F 805.542.9990
www.aecom.com

CITY OF EL PASO DE ROBLES
WATER TREATMENT PLANT PROJECT

PROCESS 83
SODIUM HYPOCHLORITE FEED SYSTEM P&ID-2

DESIGNED:
DETAILED:
CHECKED:
APPROVED:
DATE: November 2012
AECOM PROJECT NO. 60264606
P.R. PROJECT NO.
CADD STDS. AECOM

N08-04
SHEET
- OF -

DWG: V:\PASO ROBLES\60264606-WTP\000 CAD\PLANSET\5-INSTR\N08-04.dwg Layout Name: N08-04 – Plotted by: Rodriguez, David Date: 11/28/2012 – 4:04 PM
XREFS: G-BD-PR IMAGES: CITY OF PASO LOGO_1.png –

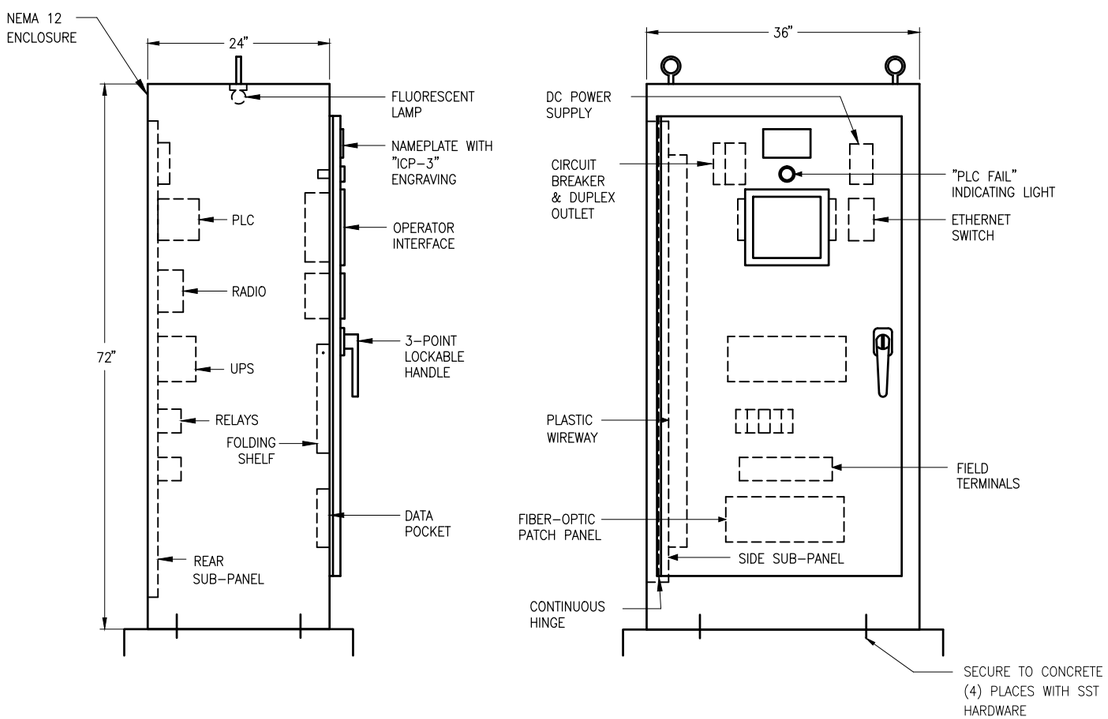

INSTRUMENT CONTROL PANEL (ICP) LAYOUT

1 / –

NTS

NOTE:

1. ICP DIMENSIONS SHOWN ARE MINIMAL. CONTRACTOR SHALL FURNISH ADEQUATELY SIZED CONTROL PANEL

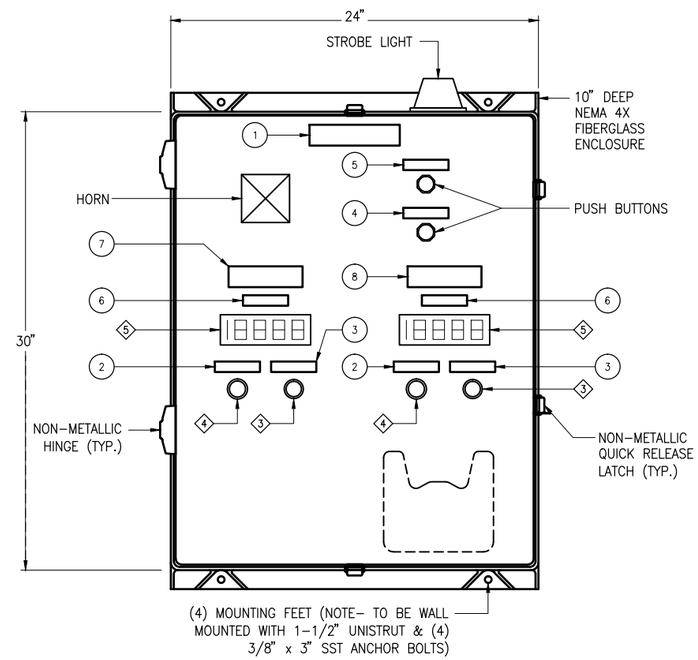

TANK FILL PANEL LAYOUT

2 / –

SCALE: NONE (TYP. FOR 82TFP)

NAMEPLATE ENGRAVING SCHEDULE:

1. PACL TANK FILL PANEL
2. HIGH LEVEL
3. HIGH-HIGH LEVEL
4. ALARM SILENCE
5. ALARM TEST
6. TANK LEVEL
7. PACL TANK 82-T-001
8. PACL TANK 82-T-002

NOTES:

1. MOUNT PANEL WITH LEVEL INDICATOR AT 5 FEET FROM GROUND LEVEL.
2. PROVIDE A SUNSHADE TO COMPLETELY SHADE FRONT OF LEVEL INDICATOR.

3 PUSH-TO-TEST LIGHT WITH RED LENS

4 PUSH-TO-TEST LIGHT WITH AMBER LENS

5 DIGITAL INDICATOR

PRELIMINARY 30% SUBMITTAL

0 1/2 1

IF THIS BAR DOES NOT MEASURE 1" THEN DRAWING IS NOT TO FULL SCALE

REV	DATE	DESCRIPTION	APPR
1			
2			
3			
4			

PROJECT ENGINEER | REG NUMBER | EXP DATE

AECOM
AECOM
1194 PACIFIC STREET, SUITE 204
SAN LUIS OBISPO, CA 93401
T 805.542.9990 F 805.542.9990
www.aecom.com

CITY OF EL PASO DE ROBLES
WATER TREATMENT PLANT PROJECT

INSTRUMENT DETAILS - 1

DESIGNED:
DETAILED:
CHECKED:
APPROVED:
DATE: November 2012
AECOM PROJECT NO. 60264606
P.R. PROJECT NO.
CADD STDS. AECOM

NDT-01
SHEET
- OF -

DWG: V:\PASO ROBLES\60264606-WTP\000 CAD\PLANSET\5-INSTR\NDT-01.dwg Layout Name: NDT-01 – Plotted by: Rodriguez, David Date: 11/28/2012 – 4:04 PM
XREFS: G-BD-PR IMAGES: CITY OF PASO LOGO_1.png –

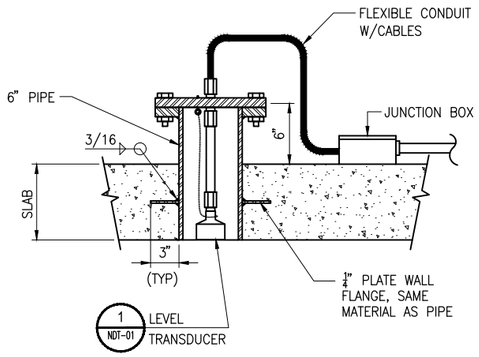

ULTRASONIC LEVEL SENSOR (1 / -)

SCALE: NONE

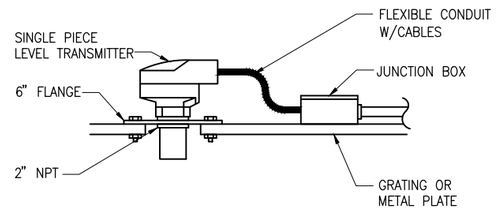

ULTRASONIC LEVEL SENSOR MOUNTING DETAIL (2 / -)

SCALE: NONE

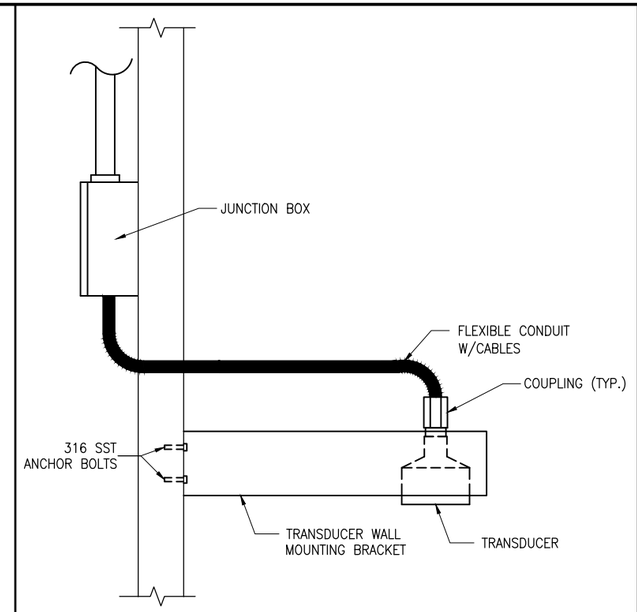

ULTRASONIC LEVEL SENSOR WALL MOUNTING DETAIL (3 / -)

SCALE: NONE

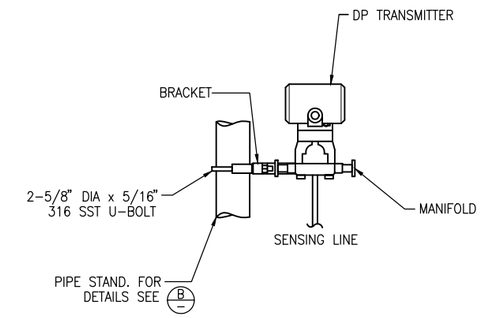

PIPE STAND MOUNTING (A / -)

SCALE: NONE

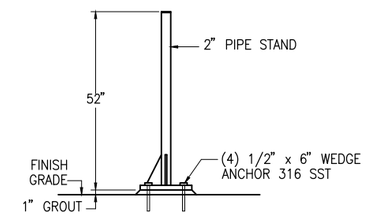

INSTRUMENT PIPE STAND (B / -)

SCALE: NONE

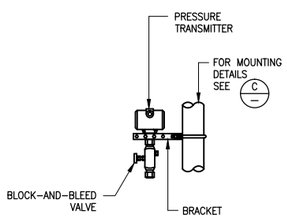

PIPE STAND MOUNTING (A / -)

SCALE: NONE

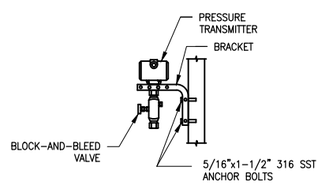

WALL MOUNTING BRACKET (B / -)

SCALE: NONE

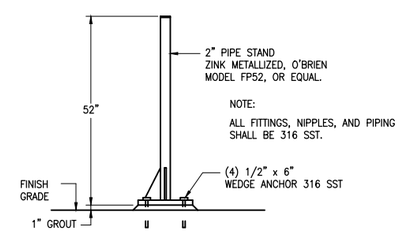

INSTRUMENT PIPE STAND MOUNTING (C / -)

SCALE: NONE

PRESSURE TRANSMITTER MOUNTING (5 / -)

SCALE: NONE

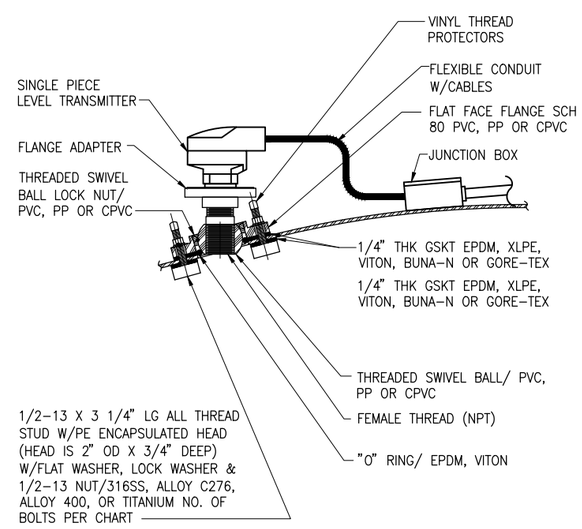

ULTRASONIC LEVEL SENSOR DOME MOUNTING DETAIL (6 / -)

SCALE:

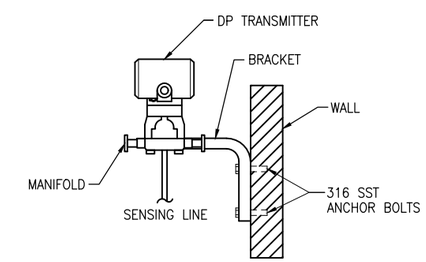

WALL MOUNTING (C / -)

SCALE: NONE

DIFFERENTIAL PRESSURE (DP) TRANSMITTER MOUNTING (4 / -)

SCALE: NONE

PRELIMINARY 30% SUBMITTAL

0 1/2 1

IF THIS BAR DOES NOT MEASURE 1" THEN DRAWING IS NOT TO FULL SCALE

REV	DATE	DESCRIPTION	APPR
1			
2			
3			
4			

PROJECT ENGINEER | REG NUMBER | EXP DATE

AECOM
AECOM
1194 PACIFIC STREET, SUITE 204
SAN LUIS OBISPO, CA 93401
T 805.542.9840 F 805.542.9990
www.aecom.com

CITY OF EL PASO DE ROBLES
WATER TREATMENT PLANT PROJECT

INSTRUMENT DETAILS - 2

DESIGNED:
DETAILED:
CHECKED:
APPROVED:
DATE: November 2012
AECOM PROJECT NO. 60264606
P.R. PROJECT NO.
CADD STDS. AECOM

NDT-02
SHEET - OF -

DWG: V:\PASO ROBLES\60264606-WTP\000 CAD\PLANSET\5-INSTR\NDT-02.dwg Layout Name: NDT-02 - Plotted by: Rodriguez, David Date: 11/28/2012 - 4:04 PM
XREFS: G-BD-PR IMAGES: CITY OF PASO LOGO_1.png

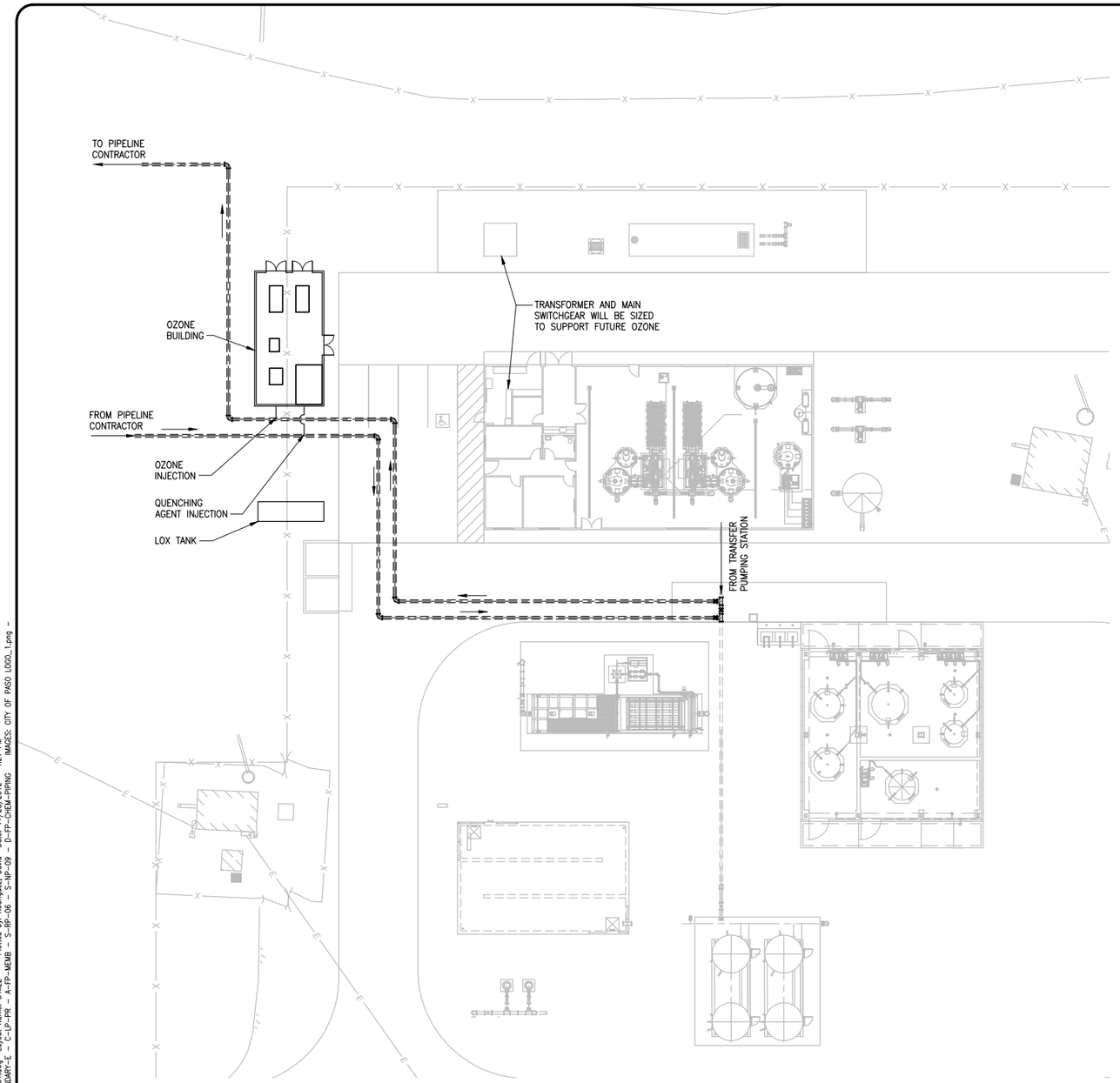

SITE PLAN

SCALE: 1" = 20'

1 –

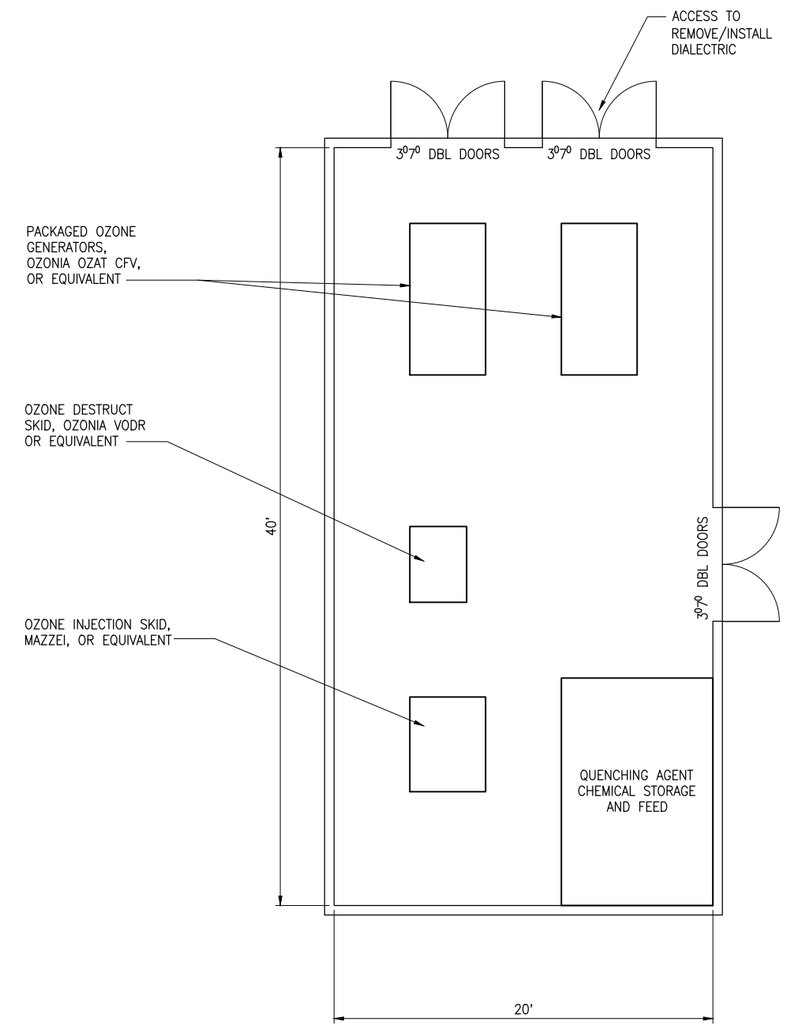

OZONE BUILDING FLOOR PLAN

SCALE: 1" = 4'

2 –

NOTES:

1. MODIFICATIONS TO INITIAL TREATMENT PLANT DESIGN WILL BE LIMITED TO SIZING OF ELECTRICAL TRANSFORMER AND PRIMARY SWITCHGEAR FOR FUTURE OZONE EQUIPMENT AND PROVISIONS FOR INCREASING THE TRANSFER PUMP MOTOR SIZE. ELECTRICAL CONDUIT WILL BE STUBBED OUT FROM THE OPERATIONS AND MEMBRANE BUILDING ELECTRICAL ROOM. SITE MODIFICATIONS NECESSARY FOR CONSTRUCTION OF THE OZONE BUILDING, INSTALLATION OF THE OZONE EQUIPMENT, AND PIPELINE CONNECTIONS ARE ALL FEASIBLE AT A FUTURE DATE.
2. LAYOUT ASSUMES AN OZONE DOSAGE OF 1 – 4 MG/L. TESTING IS REQUIRED TO CONFIRM THE MAXIMUM OZONE DOSAGE, CONTACT TIME, AND QUENCHING AGENT REQUIRED. 40 LB/DAY OZONE GENERATORS ARE SHOWN.
3. CALCIUM THIOSULFATE, SODIUM BISULFITE, OR HYDROGEN PEROXIDE MAY BE USED AS A QUENCHING AGENT. USE OF HYDROGEN PEROXIDE WOULD RESULT IN AN ADVANCED OXIDATION COMPONENT TO THE TREATMENT.
4. A MINIMUM OZONE CONTACT TIME OF 5 MINUTES IS ASSUMED. JAR TESTING MAY INDICATE THAT A LONGER CONTACT TIME IS REQUIRED. A 360 FOOT LONG, 24 INCH DIAMETER PIPE WOULD PROVIDE THE ASSUMED 5 MINUTES OF CONTACT TIME AT A TREATMENT PLANT CAPACITY OF 2.4 MGD.

PRELIMINARY
30% SUBMITTAL

0 1/2 1
IF THIS BAR DOES NOT MEASURE 1" THEN DRAWING IS NOT TO FULL SCALE

REV	DATE	DESCRIPTION	APPR
1			
2			
3			
4			

PROJECT ENGINEER | REG NUMBER | EXP DATE

AECOM
AECOM
1194 PACIFIC STREET, SUITE 204
SAN LUIS OBISPO, CA 93401
T 805.542.9840 F 805.542.9990
www.aecom.com

CITY OF EL PASO DE ROBLES
WATER TREATMENT PLANT PROJECT

SITE PLAN
(FUTURE OZONE)

DESIGNED:
DETAILED:
CHECKED:
APPROVED:
DATE: November 2012
AECOM PROJECT NO. 60264606
P.R. PROJECT NO.
CADD STDS. AECOM

OZ-01
SHEET
- OF -

DWG: V:\PASO ROBLES\60264606-WTP\000 CAD\PLANSET\2-CIVIL\OZ-01.dwg Layout Name: 34x22 – Plotted by: Rodriguez, David Date: 11/28/2012 – 4:21 PM
XREFS: C-Y-TOPO-EX – C-Y-FEATURES-E – G-BD-PR – C-Y-BOUNDARY-E – C-LP-PR – A-FP-MEMB – S-RP-06 – S-NP-09 – D-FP-CHEM-PIPING IMAGES: CITY OF PASO LOGO_1.png –

Exhibit B – Letter of Intent

BEFORE THE BOARD OF SUPERVISORS

of the

SAN LUIS OBISPO COUNTY FLOOD CONTROL
AND WATER CONSERVATION DISTRICT

Tuesday, March 27, 2012

PRESENT: Supervisors Frank Mecham, Bruce S. Gibson, Adam Hill, Paul A. Teixeira and Chairperson James R. Patterson

ABSENT: None

RESOLUTION NO. 2012-73

A RESOLUTION OF THE SAN LUIS OBISPO COUNTY FLOOD CONTROL & WATER CONSERVATION DISTRICT, CALIFORNIA, ADOPTING A GROUNDWATER MANAGEMENT PLAN FOR THE PASO ROBLES GROUNDWATER BASIN

The following Resolution is hereby offered and read:

WHEREAS, Water Code section 10750 et seq. provide local public agencies increased management authority over their groundwater resources and encourage local public agencies to adopt groundwater management plans in order to increase their eligibility for grant funds for groundwater related projects; and

WHEREAS, the Legislature has also declared that the additional study of groundwater resources is necessary to better understand how to manage groundwater effectively to ensure the safe production, quality, and proper storage of groundwater in the State; and

WHEREAS, the adoption of a groundwater management plan is encouraged, but not required, by law; and

WHEREAS, prior to adopting a resolution of intention to draft a groundwater management plan, Water Code section 10753.2 requires a local agency to hold a hearing, after publication of notice pursuant to Government Code Section 6066, on whether or not to adopt a resolution on intention to draft a groundwater management plan; and

WHEREAS, pursuant to Government Code Section 6066, the County duly published notice of a public hearing before the District's Board of Supervisors on whether or not to adopt a resolution of intention to draft a groundwater management plan (GMP) for the Paso Robles Groundwater Basin (Basin); and

WHEREAS, the Board of Supervisors conducted such public hearing on March 22, 2011, at the San Luis Obispo County Flood Control & Conservation District's Board Room, 1050 Monterey Avenue, San Luis Obispo, California and subsequently adopted a resolution of intention to draft a GMP for the Basin; and

Exhibit C – Land Conservancy Conservation Easement Monitoring Policy and Procedures

THE LAND CONSERVANCY OF SAN LUIS OBISPO COUNTY

CONSERVATION EASEMENT MONITORING POLICY

Adopted by the Board of Trustees on: May 11, 2010 RH
Date of last review (if applicable): _____

This Policy[i] will include the purpose, frequency, qualifications of the monitor, method, documentation and recordkeeping.

Purpose

It is the policy of The Land Conservancy of San Luis Obispo County (LCSLO) to visually inspect (monitor) each conservation easement property it holds at least once each year (more frequently if circumstances warrant) to ensure that the terms of the easements are being upheld and conservation values are protected, to identify changes in property conditions, to maintain working relationships with landowners, and to maintain legal records.

Frequency of Monitoring

At a minimum, LCSLO monitors all conservation easement properties once each calendar year and maintains an annually updated monitoring schedule for all LCSLO properties to assure that every property will monitored. The frequency of monitoring may be increased given, but not limited to, the following:

- Change of ownership - LCSLO will follow the LCSLO Policy on Landowner Relationships[ii] Practice 11D, for new property owners of an easement property
- Following a natural catastrophe
- Easements with a greater potential for violation. Examples: Unusually restrictive easements, easements with allowed development, easements in heavily used areas, small easements or those with many abutters
- Violation of the conservation easement is known or thought to have occurred

Qualifications of the Monitor

LCSLO staff member(s) with training in monitoring and the appropriate field experience will conduct the conservation easement monitoring. LCSLO has determined that using trained and experienced staff to monitor its properties provides valuable continuity, better interpretation of conservation easement terms, pro-active relations with landowners, and long term organizational accountability. LCSLO recognizes that it shall use staff members to monitor its properties rather than volunteers, or contract monitors, except in extraordinary circumstances.

It is encouraged although not required that the property holder accompany the LCSLO staff at the time of the monitoring. Other relevant parties may also be encouraged to attend.

Method of Monitoring

All LCSLO easement properties will be monitored according to a regularly updated Conservation Easement Monitoring Procedure to assure that all easement properties are inspected in a similar

THE LAND CONSERVANCY OF SAN LUIS OBISPO COUNTY

CONSERVATION EASEMENT MONITORING PROCEDURE

Approved by the Executive Director on: May 2010 RH
Date of last review (if applicable): _____

Purpose

This Procedure is a step by step process for LCSLO staff to fulfill the LCSLO Conservation Easement Monitoring Policy for the creation, completion and archiving of monitoring records which include: Monitoring Checklist, photographs, Photo Index, Monitoring Map (aerial map w/photo points and route), Post Monitoring Letter, and any follow-up correspondence, collectively called the Monitoring Report. The LCSLO Director of Conservation Science will be responsible for the completion of these monitoring procedures and archiving of the monitoring records.

Pre-monitoring activities

1. Scheduling the visit:
   a. To ensure all easement properties are monitored once a year, the Director of Conservation Science schedules all monitoring events via a Microsoft Outlook calendar and contacts the landowner 30 days prior to the scheduled visit, with a follow up call 1-2 days prior. A paper calendar is also used for a visual reference for upcoming monitoring visits.
   b. Landowner presence is not required although it is encouraged. If this is the first visit for a new owner, please see the LCSLO Policy for Landowner Relationships.
   c. At least two persons should monitor a property; one with appropriate field experience and training is required. Discuss potential pitfalls to avoid or safety issues that may occur such as an encounter with a trespasser or other potentially risky situation (e.g. firewood theft or marijuana plot).
2. Review of Information in Monitoring Binder:
   a. Review Baseline Document, Easement, Management Plan (if applicable), and previous Monitoring Report(s); look for specific items or issues identified. These items should be listed and attached to the Monitoring Checklist if not already listed.
   b. Put the date of the Baseline Conditions Report (or most recent update) on the Monitoring Checklist. In reviewing the Baseline Conditions Report, determine if it meets the minimum standards required by the Land Trust Alliance Standards and Practices (see Baseline Condition Report Policy. Any updates required will be completed by the next scheduled monitoring visit or no later than one year after the adoption of the Baseline Conditions Report Policy.
   c. Review Monitoring Checklist prepared for easement property, obtain Photo Index form.
   d. Monitoring Map: Aerial Photo with the route of travel and photo points:
      i. Obtain new aerial photo every three to five years
      ii. Compare to the Baseline aerial photo to determine if there are changes to the easement areas(s) that need investigation during the field visit.
      iii. Identify the route of travel, and identify photo points preferably on the Monitoring Map. The route should include inspecting the easement perimeter(s) and traveling along established photo points.
3. Load field bag with the required/needed items:
   a. Checklist of conservation values, reserved rights, and prohibitions to document
   b. Clipboard

c. Property Maps Aerial and TOPO
d. Photo Index - Photographic Documentation Log Sheets
e. Pens
f. Film Camera (check batteries) with 200 speed film, set up on automatic and no zoom
g. Compass
h. GPS Receiver
i. Tape Measure
j. Plant and habitat ID guides
k. Water, sunscreen, and first aid kit

Monitoring Activities

1. Check in with owner, or others present when arriving. Ask about any changes, or planned implementation of conditional rights, or potential sale of property. Follow safety procedures if suspected trespassers are observed.
2. Traverse property following pre-determined route stopping at photo points. Take photographs, fill in the Photo Index form and mark location on Monitoring Map.
3. Photographs:
   a. The first photograph for each property should be of a map or name of the property and date.
   b. Photo Index form: For each photograph taken, note the photo point number, coordinates, compass direction, and brief description of content on the photo index form.
   c. Retake all Baseline Condition Report photographs documenting conservation values and infrastructure (LCSLO policy/not LTA requirement).
   d. Photos to document unplanned or unusual event (e.g. flood, fire, erosion, or vandalism).
   e. Photos to document implementation/effectiveness of practices regarding a management plan (if applicable) and long term changes.
4. Using the Monitoring Checklist developed for the specific property, inspect and describe any changes observed since the creation of the baseline report in relation to the conservation values, rights and restrictions.
5. When finished, inform landowner that you are leaving and thank them for their hospitality (if applicable).

Post-monitoring visit activities

Photographs, Monitoring Checklist, and Post Monitoring Letter completion and archiving

1. Photographs:
   a. Develop film to 4x6 color glossy prints on archival paper (e.g. Proline™) and in a digital format - CD-ROM of archival quality (e.g. Gold Archival).
   b. Label photos on back in archival quality ink with date, property, monitor, photo point number and signature with prepared labels
   c. Place 4x6 photos with negatives along with entire Monitoring Report original documents for the Permanent Files.
2. Monitoring Checklist:
   a. Transcribe report form if field copy is not legible and sign.
   b. Summarize findings, particularly significant changes or problems that are pertinent to the easement, to the Executive Director (ED), and have the ED sign the report.
   c. Determine if any follow-up action is necessary, and schedule.
   d. Original signed copy of the Checklist is part of the Monitoring Report original documents for the Permanent Files.

3. Monitoring Map
   a. Monitoring Map (boundary, photo points and route) is part of the Monitoring Report original documents for the Permanent Files.
4. Post Monitoring Letter
   a. Draft a follow up letter to the landowner to thank them for the visit and to inform them of general findings. Refer briefly to issues of concern and compliment good practices as appropriate.
   b. Information regarding any changes to the monitoring procedures and the reasons (e.g. compliance with the Land Trust Alliance) will be included in the letter to the landowner.
   c. Executive Director will review the post-monitoring letter to the landowner before posting. If there is a potential corrective action, the letter will be sent with return receipt notification.
   d. Post-Monitoring Letter is part of the Monitoring Report original documents for the Permanent Files.
5. If there is a potential easement violation, initiate LCSLO Enforcement of Easement Procedure (Indicator Practice 11E). A copy of all correspondence (signed/letterhead) will be kept with the original Monitoring Report archive and in the Project Binder.
6. Archiving (please see the Conservation Easement Archiving Checklist):

Digital Copies

a. Download the Photographs from the CD-Rom onto computer, and save one copy in a folder named 'originals' and write protect, save the photos in a second folder for use in baseline and monitoring photo documents. Scan the original signed Checklist, signed Photo Index, and signed copy of landowner correspondence on letterhead, and Monitoring Map of photo points and route; Save in appropriate file by year as a PDF titled: "Monitoring Report". (e.g *\active\Land\Landarchive\Easeement/PropertyName\MonitoringRecords\2010)*
b. The Monitoring Reports for the prior year for all conservation easements will be combined and sent digitally in a board packet along with a resolution to approve the monitoring visits for the year. The Board will receive the combined Monitoring Reports for review within 90 days following the close of the year.

Permanent Files - Original Documents/signed hard copies

a. The original Monitoring Report which includes the original signed Checklist, signed 4x6 photos, signed Photo Index, Monitoring Map with photo points, and copy of all signed correspondence (on letterhead).
b. Annual Monitoring Report which includes the board resolution approving of the combined Monitoring Reports for the year, and a copy of a contemporary Conservation Easement Monitoring Procedure along with the combined Monitoring Reports.

Working Copies

a. Stewardship Binder[i]: To include a copy of the Baseline Conditions Report, Easement (or summary of terms), correspondence log, updated Conservation Easement Monitoring Procedure along with the Monitoring Report for each year which includes: Copy of the signed Monitoring Checklist, copy of signed landowner correspondence, copy of photographs, copy of Photo Index, and Monitoring Map with photo points.
b. Project Binder: Project Binders are the in-office copy of the essential documents for the easement see Records Procedure. A copy of the correspondence to the landowner is placed in the property's Land Binder in the Critical Correspondence section.

[i] *Stewardship Binder and Project Binders are available for review at 547 Marsh Street, San Luis Obispo, CA 93401.*

Exhibit D – Land Conservancy Conservation Easements Annual Stewardship Cost Spreadsheet

Reserved Funds Required for Conservation Easement

CONSERVATION EASEMENT ANNUAL STEWARDSHIP COSTS

Item	***Quantity***	***Unit***	***Unit Cost***	***Total Cost***
Monitoring (Easement Stewardship and Defense Account)				
Task 1: Pre-monitoring preparations				
Conservation Director	1	Hours	$ 50.00	$ 50.00
Postage	1	Letter	$ 0.45	$ 0.45
Subtotal				$ 50.45
Task 2: On-site monitoring				
Conservation Director	8	Hours	$ 50.00	$ 400.00
Conservation Project Manager	8	Hours	$ 45.00	$ 360.00
Mileage	60	Miles	$ 0.555	$ 33.30
Subtotal				$ 793.30
Task 3: Post monitoring reporting and correspondence				
Executive Director	2	Hours	$ 60.00	$ 120.00
Conservation Director	6	Hours	$ 50.00	$ 300.00
Conservation Project Manager	8	Hours	$ 45.00	$ 360.00
Photo Printing	24	Pictures	$ 2.50	$ 60.00
Postage	1	Packet	$ 1.50	$ 1.50
Subtotal				$ 841.50
Task 4: File Management				
Conservation Project Manager	1	Hours	$ 45.00	$ 45.00
Subtotal				$ 45.00
Monitoring Total				**$ 1,730.25**
Aerial Monitoring				
Chartered flight	4	Hours	$ 500.000	$ 2,000.00
Multiplied by Likelihood of Occuring in One Year	0.20	Percent	$ 2,000.00	**$ 400.00**
Reserved Rights (Easement Stewardship and Defense Account)				
Executive Director	12	Hours	$ 60.00	$ 720.00
Conservation Director	24	Hours	$ 50.00	$ 1,200.00
Conservation Project Manager	8	Hours	$ 45.00	$ 360.00
Mileage (per trip)	180	Miles	$ 0.555	$ 99.90
Subtotal				$ 2,379.90
Multiplied by Likelihood of Occuring in One Year	0.10	Percent	$ 2,379.90	**$ 237.99**
Easement Violations (Conservation Easement Defense CD)				
Executive Director	16	Hours	$ 60.00	$ 960.00
Conservation Director	40	Hours	$ 50.00	$ 2,000.00
Conservation Project Manager	8	Hours	$ 45.00	$ 360.00
Terrafirma Insurance Deductible	1	Deductible	$ 5,000.00	$ 5,000.00
Terrafirma Insurance Annual Rate per Easement	1	easement	$ 60.00	$ 60.00
Photo Processing	24	Pictures	$ 2.50	$ 60.00
Postage	1	Packet	$ 1.50	$ 1.50
Mileage	150	Miles	$ 0.555	$ 83.25
Subtotal				$ 8,524.75
Multiplied by Likelihood of Occuring in One Year	0.05	Percent	$ 8,524.75	**$ 426.24**
TOTAL				**$ 2,794.48**
RESERVED FUNDS NEEDED FOR ANNUAL COSTS				
Annual Rate of Return	0.03	Percent	**$ 93,149.25**	$ 2,794.48