City of El Paso de Robles

Plans for Construction of

2.4 MGD WATER TREATMENT PLANT PROJECT

November 2012

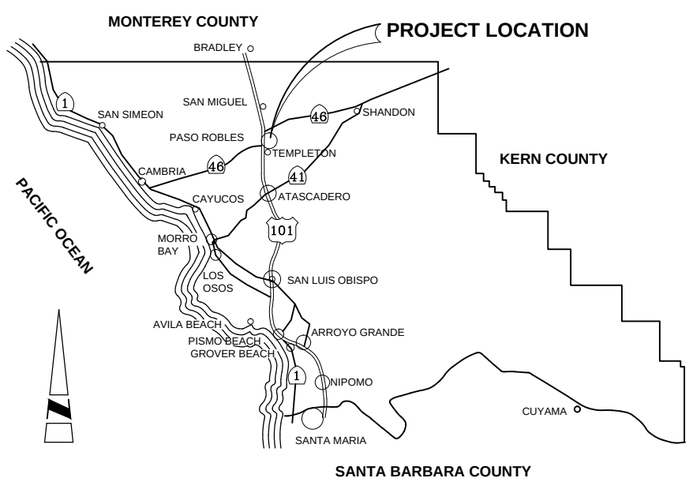

VICINITY MAP

WATER TREATMENT PLANT LOCATION MAP

PRELIMINARY
30% SUBMITTAL

PROJECT
WATER TREATMENT PLANT PROJECT

CLIENT
CITY OF EL PASO DE ROBLES

APPROVED BY:

DITAS ESPERANZA, CAPITAL PROJECT ENGINEER — DATE

CHRISTOPHER ALAKEL, WATER RESOURCE MANAGER — DATE

MIKE MASER, WATER DIVISION SUPERVISOR — DATE

PROJECT MANAGER: JON HANLON — DATE: 11/29/12

ENGINEER OF RECORD: R. KEVIN BERRYHILL — DATE: 11/29/12

ACCOUNT NUMBER: 60264606 — FILE NUMBER

SHEET NUMBER: G00-01 — SHEETS: 1 OF -

AECOM
1194 Pacific Street, Suite 204
San Luis Obispo, California 93401
T 805.542.9840 F 805.542.9990
www.aecom.com

DWG: \\?\PASO ROBLES\60264606-WTP\400 CAD\PLANSET\1-GEN\G00-01.dwg USER: rodriguezfl
DATE: Nov 28, 2012 3:36pm XREFS: C-*-BOUNDARY-E C-*-TOPO-EX C-*-FEATURES-E C-LP-PR S-RP-06 D-FP-CHEM-PIPING S-NP-09 A-FP-MEMB IMAGES: CITY OF PASO LOGO_1.png

DWG: V:\PASO ROBLES\60264606-WTP\000 CAD\PLANSET\1-GEN\G00-02.dwg Layout Name: 34x22 - Plotted by: Rodriguez, David Date: 11/28/2012 - 3:36 PM
XREFS: G-BD-PR IMAGES: CITY OF PASO LOGO_1.png -

PRELIMINARY
30% SUBMITTAL

0 1/2 1
IF THIS BAR DOES NOT MEASURE 1" THEN DRAWING IS NOT TO FULL SCALE

REV	DATE	DESCRIPTION	APPR

PROJECT ENGINEER REG NUMBER EXP DATE

AECOM
AECOM
1194 PACIFIC STREET, SUITE 204
SAN LUIS OBISPO, CA 93401
T 805.542.9840 F 805.542.9990
www.aecom.com

CITY OF EL PASO DE ROBLES
INCORPORATED 1889

CITY OF EL PASO DE ROBLES
WATER TREATMENT PLANT PROJECT

SHEET INDEX

DESIGNED:
DETAILED:
CHECKED:
APPROVED:
DATE: November 2012
AECOM PROJECT NO.
60264606
P.R. PROJECT NO.
CADD STDS.
AECOM

G00-02
SHEET
2 OF -

ABBREVIATIONS

AB	ANCHOR BOLT/AGGREGATE BASE
ABT	ABOUT
AC	ASPHALT CONCRETE
ADPTR	ADAPTER
AGG	AGGREGATE
AHD	AHEAD
AL	ALUMINUM
ALTN	ALTERNATE
AP	ANGLE POINT
APPROX	APPROXIMATE
ARR	ARRANGEMENT
ASSY	ASSEMBLY
AW	AUXILIARY WATER
BC	BEGINNING OF CURVE
BEG	BEGIN
BETW	BETWEEN
BF	BLIND FLANGE
BFV	BUTTERFLY VALVE
BLDG	BUILDING
BLK	BLOCK
BM	BEAM/BENCH MARK
BOT	BOTTOM
BW	BACK OF WALK/BLOCKWALL
CAP	CAPACITY
CBS	COARSE BAR SCREEN
CFS	CUBIC FEET PER SECOND
CI	CAST IRON
CIP	CLEAN-IN-PLACE
CIRC	CIRCULATOR
CISP	CAST IRON SOIL PIPE
CJ	CONSTRUCTION JOINT
CL	CLASS
CL_2	CHLORINE
℄	CENTER LINE
CLR	CLEAR
CMP	CORRUGATED METAL PIPE
CMPNT	COMPONENT
CMU	CONCRETE MASONRY UNIT
CND	CONDUIT
CNS	COMPACTED NATIVE SUBGRADE
CO	CLEAN OUT/CONDUIT ONLY
COL	COLUMN
COMP	COMPLETE/COMPOSITE
CONC	CONCRETE
CONN	CONNECTION
CONST	CONSTRUCTION
CONT	CONTINUATION
CONTR	CONTROL/CONTRACTOR
COR	CORNER
CORP	CORPORATION
CP	CATHODIC PROTECTION
CPLG	COUPLING
CT	COPPER TUBING/CENTER TOP
CTG	COATING
CTR	CENTER
CYL	CYLINDER
DAF	DISSOLVED AIR FLOATATION
DBL	DOUBLE
DI	DUCTILE IRON/DROP INLET
DIA	DIAMETER
DIM	DIMENSION
DIP	DUCTILE IRON PIPE
DISCH	DISCHARGE
DN	DOWN
DR	DRAIN/DOOR
DWG	DRAWING
DWL	DOWEL
E	EAST
EA	EACH
EC	END OF CURVE/ELECTRICAL CONDUCTIVITY
ECC	ECCENTRIC
EDP	EMERGENCY DISPOSAL POND
EF	EACH FACE/EXHAUST FAN
EG	EXISTING GROUND OR TURF
EL	ELEVATION
ELB	ELBOW
ELEC	ELECTRIC
ENC	ENCASEMENT
EP	EDGE OF PAVEMENT
EPVC	ELECTRICAL PVC
EW	EACH WAY
EXIST	EXISTING
EXST	EXISTING
EXP	EXPANSION
EXT	EXTENSION/EXTERIOR
FC	FACE OF CURB/FOOT-CANDLE
FD	FLOOR DRAIN
FDN	FOUNDATION
FDR	FEEDER
FE	FINAL EFFLUENT
FG	FINISHED GRADE
FF	FINISHED FLOOR/FLAT FACE
FIG	FIGURE
FIN	FINISH/FINAL
FL	FLOWLINE
FLG	FLANGE
FLEX	FLEXIBLE
FLR	FLOOR
FM	FLOW METER
FOC	FACE OF CONCRETE
FT	FEET/FOOT
FTG	FOOTING
GA	GAUGE
GAC	GRANULAR ACTIVATED CARBON
GAL	GALLON
GALV	GALVANIZED
GB	GRADE BREAK
GCH	GRIT CHAMBER
GCL	GRIT CLASSIFIER
GM	GAS METER
GP	GRIT PUMP
GPM	GALLONS PER MINUTE
GR	GRADE
GRTG	GRATING
GRVD	GROOVED
GV	GAS VALVE/GATE VALVE
HB	HOSE BIBB
HDR	HEADER
HGT	HEIGHT
HORIZ	HORIZONTAL
HP	HORSEPOWER/HIGH PRESSURE
HR	HANDRAIL/HOUR
HSS	HIGH STRENGTH STEEL
HWL	HIGH WATER LEVEL
HYDR	HYDRAULIC
ID	INSIDE DIAMETER
IDB	INFLUENT DISTRIBUTION BOX
IE	INVERT ELEVATION
ILP	INFLUENT LIFT PUMP
ILS	INFLUENT LIFT STATION
IN	INCH(ES)
INSTL	INSTALLATION
INSTM	INSTRUMENTATION
INT	INTERIOR
IPS	IRON PIPE SIZE
JT	JOINT
LB	POUND
LG	LONG
LLV	LONG LEG VERTICAL
LSH	LEVEL SWITCH HIGH
LSL	LEVEL SWITCH LOW
LT	LEFT/LIGHT
LWL	LOW WATER LEVEL
M	MILLIGRAM
MACH	MACHINE
MATL	MATERIAL
MAX	MAXIMUM
MB	MACHINE BOLT
MBS	MECHANICAL BAR SCREEN
MCC	MOTOR CONTROL CENTER
MECH	MECHANICAL
MFR	MANUFACTURER
MFS	MEMBRANE FILTRATION SYSTEM
MGD	MILLION GALLONS PER DAY
MH	MANHOLE
MI	MALLEABLE IRON/MILE
MIN	MINIMUM
MIPT	MALE IRON PIPE THREAD
ML	MATCH LINE/MIXED LIQUOR
MOV	MOTORIZED VALVE
MS	MOWSTRIP
MXR	MIXER
N	NORTH
NIC	NOT IN CONTRACT
No.	NUMBER
NOM	NOMINAL
NPT	NATIONAL PIPE THREAD
NTS	NOT TO SCALE
NWL	NORMAL WATER LEVEL
OC	ON CENTER
OD	OXIDATION DITCH/OUTSIDE DIAMETER
OF	OVERFLOW
OPNG	OPENING
OPP	OPPOSITE
PC	PRIMARY CLARIFIER
PCC	POINT OF COMPOUND CURVE/ PORTLAND CEMENT CONCRETE
PE	PLAIN END/POLYETHYLENE/PRIMARY EFFLUENT/POLYELECTROLYTE
PELP	PRIMARY EFFLUENT LIFT PUMP
PELS	PRIMARY EFFLUENT LIFT STATION
PEN	PENETRATE
PL	PLATE/PROPERTY LINE
POC	POINT ON CURVE
PRV	PRESSURE REDUCING VALVE
PSI	POUNDS PER SQUARE INCH
PT	POINT
PVC	POLYVINYL CHLORIDE
PVMT	PAVEMENT
PW	PROCESS WATER
PWR	POWER
R	RADIUS, RADIAL
RAS	RETURNED ACTIVATED SLUDGE
RCP	REINFORCED CONCRETE PIPE
RD	ROUND/ROAD
RDC	REDUCE
RECM	RECOMMEND, RECOMMENDATION
REINF	REINFORCED
REL	RELATIVE
REQD	REQUIRED
RP	REDUCED PRESSURE BACKFLOW PREVENTER
RS	RAW SEWAGE
RT	RIGHT
R/W	RIGHT OF WAY
S	SOUTH/SEWER/SLOPE
SAR	SURFACE AERATOR
SC	SECONDARY CLARIFIER
SCDB	SECONDARY CLARIFIER DISTRIBUTION BOX
SCH	SCHEDULE
SCP	SCUM PUMP
SD	STORM DRAIN
SECT	SECTION
SHLDR	SHOULDER
SHT	SHEET
SIM	SIMILAR
SL	SLUICE GATE/SLOPE
SLDR	SOLDER
SLTD	SLOTTED
SP	SPACE/SEWER PIPE/SLUDGE PUMP/STEEL PIPE/SPOOL
SPCG	SPACING
SPEC	SPECIFICATION
SPR	IRRIGATION SPRINKLER
SPRT	SUPPORT
SQ	SQUARE
SRS	SEPTAGE RECEIVING STATION
SS	SANITARY SEWER
SSDB	SECONDARY SLUDGE DISTRIBUTION BOX
SST	STAINLESS STEEL
STA	STATION
STD	STANDARD
STF	STIFFENER
STL	STEEL
STR	STRAIGHT
STRUC	STRUCTURE
SVCE	SERVICE
SWC	SCREENING WASHER/COMPACTOR
SYMM	SYMMETRICAL
T&B	TOP & BOTTOM
TBD	TO BE DETERMINED
TC	TOP OF CURB OR CONCRETE
TCF	TOP OF CURB FACE
TEMP	TEMPERATURE
TF	TOP OF FOOTING
TG	TOP OF GRATE
THD	THREAD
THK	THICK
THKNS	THICKNESS
TOP	TOP OF PIPE/TOP OF PEDESTAL
TOT	TOTAL
TOW	TOP OF WALL
TRANS	TRANSFORMER
TW	TOP OF WALL
TYP	TYPICAL
UD	UNDER DRAIN
UNO	UNLESS NOTED OTHERWISE
V	VALVE
VB	VALVE BOX
VCP	VITRIFIED CLAY PIPE
W	WEST/WIDTH
W/	WITH
WAS	WASTE ACTIVATED SLUDGE
WG	WEIR GATE
WM	WATER METER
WSP	WELDED STEEL PIPE
WT	WEIGHT
WTR	WATER
WV	WATER VALVE
WWF	WELDED WIRE FABRIC
XMTR	TRANSMITTER

PIPE AND FITTING SYSTEM

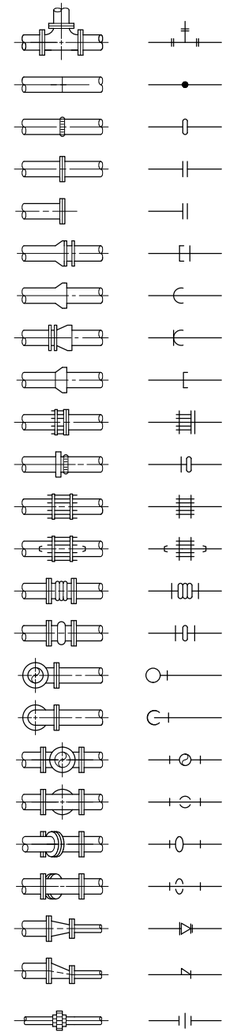

- FLANGED TEE
- WELDED JOINT
- GROOVED END JOINT
- FLANGED JOINT
- BLIND FLANGE
- MECHANICAL JOINT
- BELL & SPIGOT JOINT
- FLANGE X HUB ADAPTER
- HUB & SPIGOT JOINT (RUBBER GASKET)
- FLANGED COUPLING ADAPTER
- GROOVED END ADAPTER FLANGE
- FLEXIBLE COUPLING
- FLEXIBLE COUPLING WITH THRUST TIES
- STEEL BELLOWS XP JOINT
- ELASTOMER BELLOWS XP JOINT
- ELBOW UP (TOWARD VIEWER)
- ELBOW DOWN (AWAY FROM VIEWER)
- TEE UP (TOWARD VIEWER)
- TEE DOWN (AWAY FROM VIEWER)
- LATERAL UP (TOWARD VIEWER)
- LATERAL DOWN (AWAY FROM VIEWER)
- CONCENTRIC REDUCER
- ECCENTRIC REDUCER
- UNION

VALVE SYMBOLS

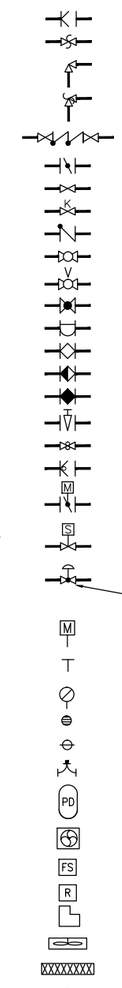

DOUBLE LEAF CHECK	DLCV
IN-LINE PRESSURE RELIEF	PRFV
ANGLE BACKPRESSURE	BPV
ANGLE BACKPRESSURE RELIEF	APRF
BACKFLOW PREVENTER	BFP
BUTTERFLY	BFV
GATE	GV
KNIFE GATE	KGV
SWING CHECK, CHECK	SCV CV
BALL	BLV
VEE-BALL	VBLV
GLOBE	GLV
DIAPHRAGM	DV
PLUG	PV
ECCENTRIC PLUG	EPV
LUBRICATED PLUG	LPV
NEEDLE VALVE	NV
PINCH VALVE	PNV
BALL CHECK	BCV
MOTOR OPERATED BUTTERFLY	MOBV
SOLENOID CONTROL	SOV
CONTROL FCV=FLOW CONTROL PRV=PRESSURE REDUCING AV =ALTITUDE VALVE	
VALVE OPERATOR	VO
VALVE STEM	VS
PRESSURE GAUGE	PG
FLOOR DRAIN	FD
CLEANOUT	CO
ANTISIPHON/BACKPRESSURE VALVE	ABV
PULSATION DAMPENER	PD
HYDRODYNAMIC MIXER	HM
FLOW SWITCH	FS
ROTAMETER	
METERING PUMP	
MIX CHAMBER	
STATIC MIXER	
FLOW METER	

LEGEND

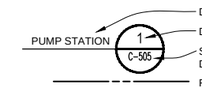

- DETAIL DESCRIPTION
- DETAIL NUMBER
- SHEET NUMBER WHERE DETAIL CAN BE FOUND
- RIGHT OF WAY/PROPERTY LINE
- CENTERLINE/BASELINE
- SD12 — EXIST STORM DRAIN & SIZE
- SS12 — EXIST SANITARY SEWER PIPE & SIZE
- W12 — EXIST WATER MAIN & SIZE
- IRRI12 — EXIST IRRIGATION LINE & SIZE
- T — EXIST TELEPHONE LINE
- E — EXIST UNDERGROUND ELECTRICAL LINE
- ET — EXIST ELECTRICAL/TELEPHONE LINE
- OE — EXIST OVERHEAD ELECTRICAL LINE
- G2 — EXIST BURIED GAS PIPE & SIZE
- EXIST DRAIN INLET
- SSMH — EXIST SANITARY SEWER MANHOLE
- SDMH — EXIST STORM DRAIN MANHOLE
- SSCO — EXIST SANITARY SEWER CLEANOUT
- X — X — EXIST CHAIN LINK FENCE
- EXIST STRUCTURE
- × 210.53 EG — SPOT ELEVATION & DESCRIPTION
- SURVEY CONTROL POINT
- H+T — HUB AND TACK SURVEY POINT
- N+T — NAIL AND TIN SURVEY POINT
- FH — EXIST FIRE HYDRANT
- TEL — EXIST TELEPHONE CABLE PEDESTAL
- PB — EXIST UTILITY PULL BOX
- EXIST LIGHT
- UP — EXIST UTILITY POLE
- EXIST TELEPHONE POLE W/ GUY WIRE
- WM — EXIST WATER METER
- WV — EXIST WATER VALVE
- GM — EXIST GAS METER
- EXIST TREE
- TOP/TOE OF BANK
- EXIST ROAD SIGN
- EXIST WELL

PRELIMINARY 30% SUBMITTAL

0 1/2 1

IF THIS BAR DOES NOT MEASURE 1" THEN DRAWING IS NOT TO FULL SCALE

REV	DATE	DESCRIPTION	APPR

PROJECT ENGINEER | REG NUMBER | EXP DATE

AECOM
1194 PACIFIC STREET, SUITE 204
SAN LUIS OBISPO, CA 93401
T 805.542.9840 F 805.542.9990
www.aecom.com

CITY OF EL PASO DE ROBLES
WATER TREATMENT PLANT PROJECT

ABBREVIATIONS AND LEGEND

DESIGNED:
DETAILED:
CHECKED:
APPROVED:
DATE: November 2012
AECOM PROJECT NO. 60264606
P.R. PROJECT NO.
CADD STDS. AECOM

G00-03
SHEET 3 OF -

DWG: V:\PASO ROBLES\60264606-WTP\000 CAD\PLANSET\1-GEN\G00-03.dwg Layout Name: 34x22 - Plotted by: Rodriguez, David Date: 11/28/2012 - 3:36 PM
XREFS: G-BD-PR IMAGES: CITY OF PASO LOGO_1.png

PLANT DESIGN CAPACITY	UNITS	VALUE
PEAK CAPACITY	MGD	2.4
	CFS	3.7
	GPM	1667
FIRM CAPACITY	MGD	1.2
	CFS	1.9
	GPM	833
MINIMUM CAPACITY	MGD	1
	CFS	1.6
	GPM	700

RAW WATER SUPPLY	UNITS	VALUE
LAKE INTAKE SCREEN OPENING	INCH	1
DESIGN FLOW	MGD	8
DESIGN HYDRAULIC GRADE LINE @ BUILDOUT	FEET	791
GUARANTEED HYDRAULIC GRADE LINE	FEET	N/A

DISSOLVED AIR FLOATATION (DAF)	UNITS	VALUE
TYPE: HIGH RATE PACKAGED	NUMBER	1
AVERAGE CAPACIITY	GPM	1,667
LOADING RATE (MAX)	GPM/FT2	11.6
FLOCCULATION TIME (MIN)	MINUTES	8
SLUDGE REMOVAL METHOD	TYPE	MECH

DAF SATURATOR	UNITS	VALUE
TYPE: SKID	NUMBER	1
PUMPS PER SKID	NUMBER	1+1
SATURATOR TANKS PER SKID	NUMBER	1

MEMBRANE FILTRATION SYSTEM	UNITS	VALUE
TYPE: PALL ARIA AP-6X PACKAGED	NUMBER	2
CAPACITY EACH	GPM	833
INSTALLED MODULES PER SKID	NUMBER	60
INSTANTANEOUS DESIGN FLUX	GFD	40
MICROFILTER PORE RATING	MICRON	0.1
MEMBRANE	MATERIAL	PVDF
PRE-STRAINER RATING	MICRON	300
INLET PRESSURE (MAX)	PSI	44

MEMBRANE AIR SUPPLY	UNITS	VALUE
TYPE: SINGLE STAGE ROTARY SCREW	NUMBER	1+1
CAPACITY EACH	CFS	XX
MOTOR: VFD	HP	XX

FILTRATE TRANSFER PUMPING STATION	UNITS	VALUE
TYPE: HORIZONTAL SPLIT CASE	NUMBER	2
CAPACITY EACH	GPM	900
MOTOR: VFD	HP	15
FILTRATE TANK	GAL	7,000

GRANULAR ACTIVATED CARBON (GAC)	UNITS	VALUE
TYPE: 20,000-LB CONTACTORS IN PARALLEL	NUMBER	4
EMPTY BED CONTACT TIME (MAX)	MINUTES	12

CLEARWELL	UNITS	VALUE
TYPE: CONCRETE SERPENTINE	NUMBER	1
OVERALL DIMENSIONS	FT	52'x34'
HEIGHT	FT	17
HEIGHT TO HIGH WATER LEVEL	FT	16
OPERATIONAL VOLUME	GAL	XX
TOTAL VOLUME	GAL	XX

HIGH SERVICE PUMP STATION	UNITS	VALUE
TYPE: VERTICAL TURBINE	NUMBER	2
CAPACITY EACH	GPM	900
MOTOR: VFD	HP	100

CHEMICAL BULK STORAGE	UNITS	PHASE 1
SODIUM PERMANGANATE (20%) - PROCESS 81		
TYPE: FRP BULK STORAGE TANK	NUMBER	1
VOLUME EACH	GALLONS	-
PACL - PROCESS 82		
TYPE: FRP BULK STORAGE TANK	NUMBER	2
VOLUME EACH	GALLONS	2,960
SODIUM HYPOCHLORITE (12.5%) - PROCESS 83		
TYPE: FRP BULK STORAGE TANK	NUMBER	2
VOLUME EACH	GALLONS	1,680
SODIUM HYDROXIDE (25%) - PROCESS 84		
TYPE: FRP BULK STORAGE TANK	NUMBER	1
VOLUME EACH	GALLONS	5,800

CHEMICAL USAGE	PROCESS FLOW			DESIGN DOSAGE			DESIGN FEED RATES			CHEMICAL FEED EQUIPMENT		
	UNITS	MINIMUM	MAXIMUM	UNITS	MINIMUM	MAXIMUM	UNITS	MINIMUM	MAXIMUM	TYPE	UNITS	CAPACITY
SODIUM PERMANGANATE (20%) - PROCESS 81												
INJECTION POINT: DAF STATIC MIXER	MGD	1	2.4	MG/L	0.5	3	GAL/HR	0.08	1.17	ELECT DIAPHRAGM	GAL/HR	-
PACL - PROCESS 82												
INJECTION POINT: DAF STATIC MIXER	MGD	1	2.4	MG/L	20	60	GAL/HR	0.60	4.50	ELECT DIAPHRAGM	GAL/HR	
SODIUM HYPOCHLORITE (12.5%) - PROCESS 83												
INJECTION POINT: PRE-CLEARWELL	MGD	1	2.4	MG/L	1	5	GAL/HR	0.35	4.38	ELECT DIAPHRAGM	GAL/HR	
INJECTION POINT: POST-CLEARWELL	MGD	1	2.4	MG/L	0.5	3	GAL/HR	0.18	2.63	ELECT DIAPHRAGM	GAL/HR	
SODIUM HYDROXIDE (25%) - PROCESS 84												
INJECTION POINT: POST-CLEARWELL	MGD	1	2.4	MG/L	2	20	GAL/HR	0.26	6.58	ELECT DIAPHRAGM	GAL/HR	

RAW WATER DESIGN CRITERIA

PARAMETER	DESIGN LIMIT
TURBIDITY	6 NTU AVG, 20 NTU 95%, 45 NTU MAX
TOC	2.5 - 6.0 MG/L
TRUE COLOR	40 UNITS
pH	6.5 - 8.5
TEMPERATURE	10 - 25 °C
ALKALINITY	75 - 125 MG/L AS $CaCO_3$
HARDNESS	85 - 150 MG/L AS $CaCO_3$
TOTAL COLIFORM	>1,600 MPN
CRYPTOSPORIDIUM	< 0.075 MPN/100 ML (Bin 1)
IRON	0.965 mg/L
MANGANESE	0.820 mg/L

PRELIMINARY
30% SUBMITTAL

0 1/2 1
IF THIS BAR DOES NOT MEASURE 1" THEN DRAWING IS NOT TO FULL SCALE

REV	DATE	DESCRIPTION	APPR
1			
2			
3			
4			

PROJECT ENGINEER | REG NUMBER | EXP DATE

AECOM
AECOM
1194 PACIFIC STREET, SUITE 204
SAN LUIS OBISPO, CA 93401
T 805.542.9840 F 805.542.9990
www.aecom.com

CITY OF EL PASO DE ROBLES
WATER TREATMENT PLANT PROJECT

DESIGN CRITERIA

DESIGNED:
DETAILED:
CHECKED:
APPROVED:
DATE: November 2012
AECOM PROJECT NO. 60264606
P.R. PROJECT NO.
CADD STDS. AECOM

G00-04
SHEET 4 OF -

DWG: V:\PASO ROBLES\60264606-WTP\000 CAD\PLANSET\1-GEN\G00-04.dwg Layout Name: 34x22 - Plotted by: Rodriguez, David Date: 11/28/2012 - 3:36 PM
XREFS: G-BD-PR IMAGES: CITY OF PASO LOGO_1.png -

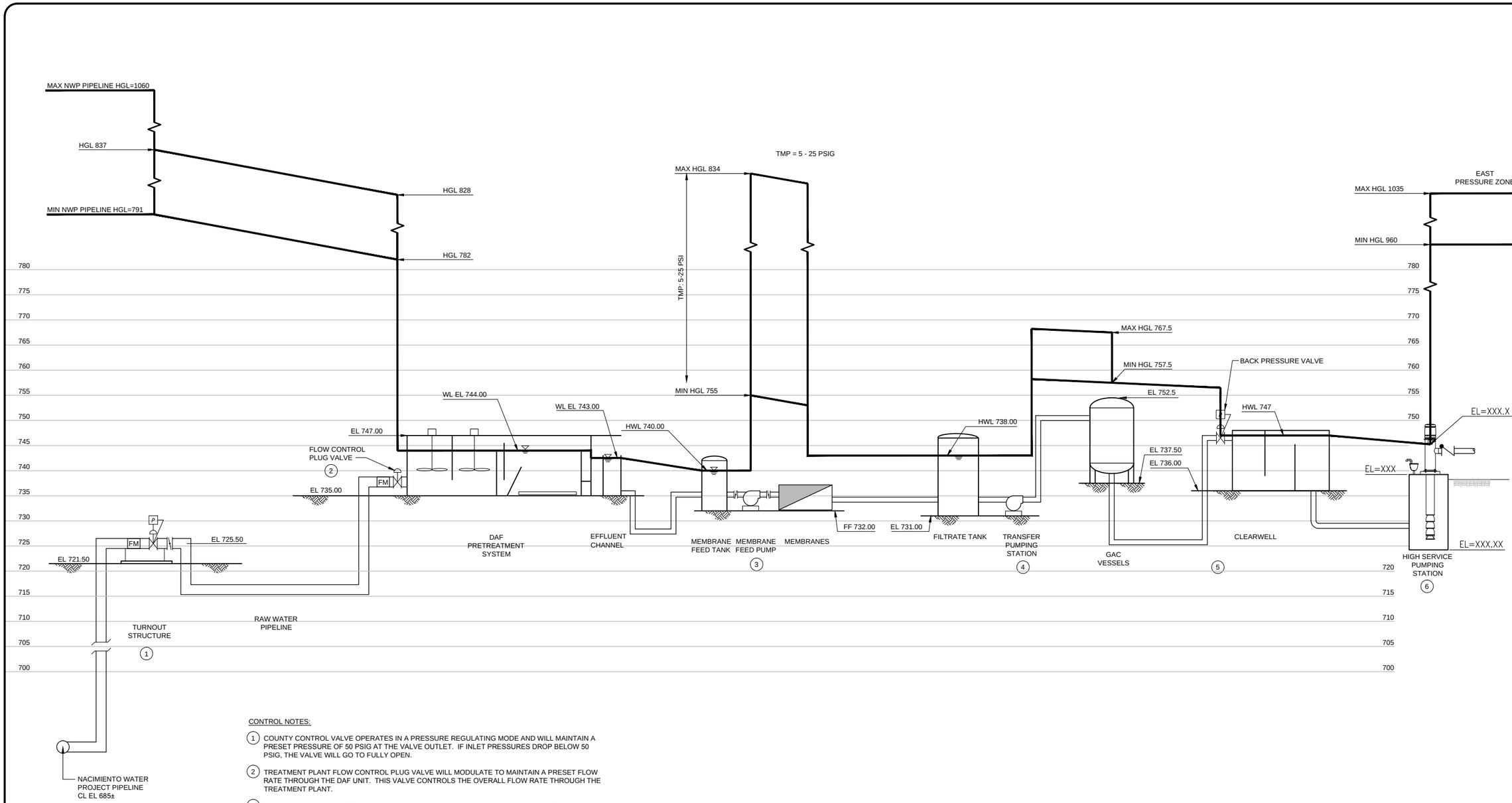

CONTROL NOTES:

1. COUNTY CONTROL VALVE OPERATES IN A PRESSURE REGULATING MODE AND WILL MAINTAIN A PRESET PRESSURE OF 50 PSIG AT THE VALVE OUTLET. IF INLET PRESSURES DROP BELOW 50 PSIG, THE VALVE WILL GO TO FULLY OPEN.
2. TREATMENT PLANT FLOW CONTROL PLUG VALVE WILL MODULATE TO MAINTAIN A PRESET FLOW RATE THROUGH THE DAF UNIT. THIS VALVE CONTROLS THE OVERALL FLOW RATE THROUGH THE TREATMENT PLANT.
3. THE SPEED OF THE VFD CONTROLLED MEMBRANE FEED PUMPS WILL BE ADJUSTED TO MAINTAIN AN AVERAGE FLOW RATE EQUAL TO THE OVERALL TREATMENT PLANT FLOW SET POINT AND WILL BE TRIMMED BASED ON THE WATER LEVEL IN THE MEMBRANE FEED TANKS.
4. THE SPEED OF THE VFD CONTROLLED FILTRATE BOOSTER PUMPS WILL BE ADJUSTED TO MAINTAIN A NEARLY CONSTANT FLOW RATE EQUAL TO THE OVERALL TREATMENT PLANT FLOW SET POINT AND WILL BE TRIMMED BASED ON THE AVERAGE WATER LEVEL IN THE FILTRATE TANK.
5. A PRESSURE SUSTAINING VALVE DESIGNED TO ENSURE BACKPRESSURE ON THE GAC VESSEL AIR RELEASE VALVE.
6. THE SPEED OF THE VFD CONTROLLED HIGH SERVICE PUMPS WILL BE ADJUSTED TO MAINTAIN A CONSTANT WATER LEVEL IN THE CLEARWELL

LEGEND:

XXX.XX / XXX.XX — HGL @ 6.0 MGD (INITIAL CAPACITY) / HGL @ 12.0 MGD (ULTIMATE CAPACITY)

PRELIMINARY
30% SUBMITTAL

0 1/2 1
IF THIS BAR DOES NOT MEASURE 1" THEN DRAWING IS NOT TO FULL SCALE

REV	DATE	DESCRIPTION	APPR
1			
2			
3			
4			

PROJECT ENGINEER | REG NUMBER | EXP DATE

AECOM
1194 PACIFIC STREET, SUITE 204
SAN LUIS OBISPO, CA 93401
T 805.542.9840 F 805.542.9990
www.aecom.com

CITY OF EL PASO DE ROBLES
WATER TREATMENT PLANT PROJECT

HYDRAULIC PROFILE

DESIGNED:
DETAILED:
CHECKED:
APPROVED:
DATE: November 2012
AECOM PROJECT NO. 60264606
P.R. PROJECT NO.
CADD STDS. AECOM

G00-05
SHEET 5 OF -

DWG: V:\PASO ROBLES\60264606-WTP\000 CAD\PLANSET\1-GEN\G00-05.dwg Layout Name: Layout1 – Plotted by: Rodriguez, David Date: 11/28/2012 – 3:37 PM
XREFS: G-BD-PR IMAGES: CITY OF PASO LOGO_1.png –

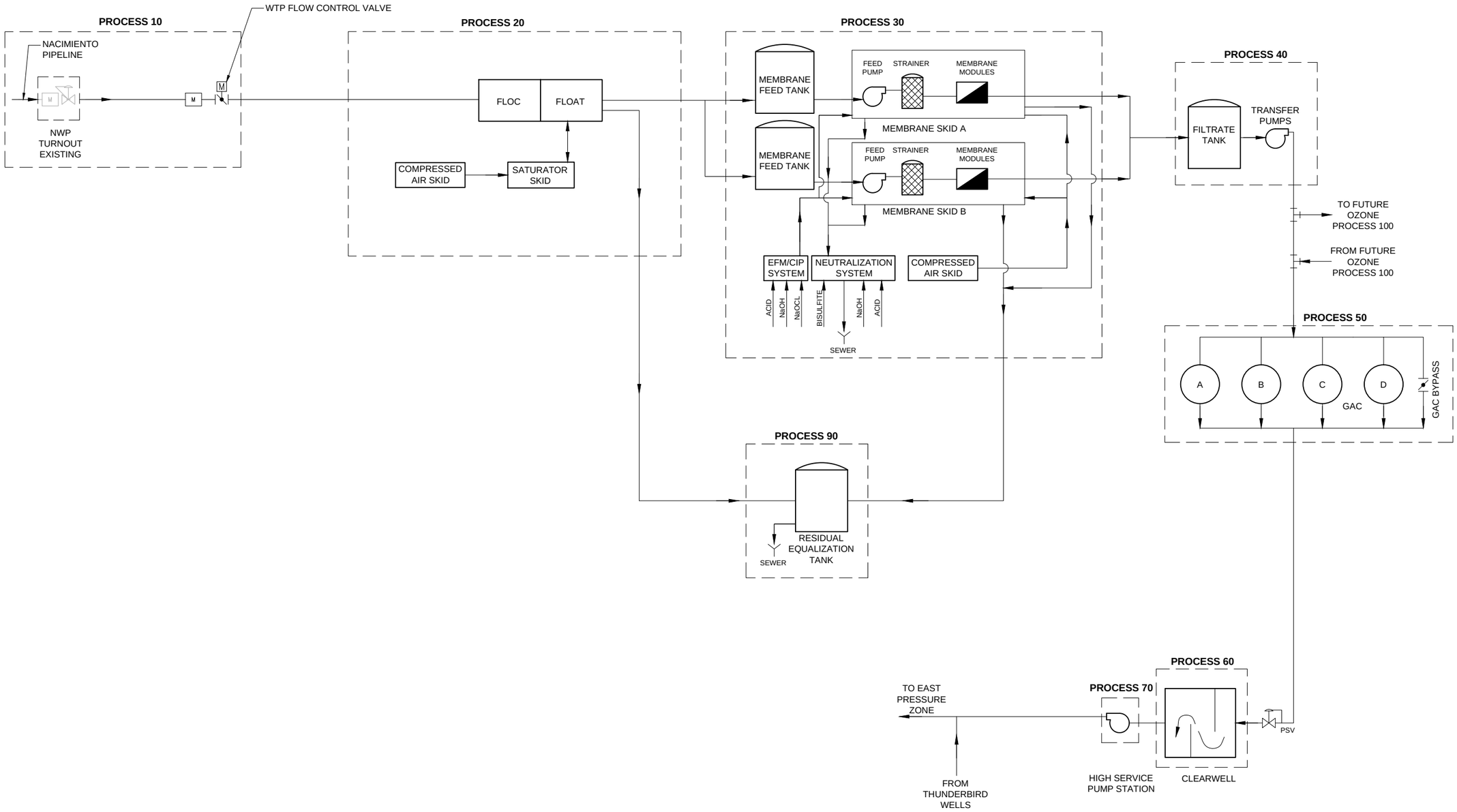

PRELIMINARY
30% SUBMITTAL

0 1/2 1
IF THIS BAR DOES NOT MEASURE 1" THEN DRAWING IS NOT TO FULL SCALE

REV	DATE	DESCRIPTION	APPR

PROJECT ENGINEER | REG NUMBER | EXP DATE

AECOM
AECOM
1194 PACIFIC STREET, SUITE 204
SAN LUIS OBISPO, CA 93401
T 805.542.9840 F 805.542.9990
www.aecom.com

CITY OF EL PASO DE ROBLES
WATER TREATMENT PLANT PROJECT

PROCESS FLOW DIAGRAM

DESIGNED:
DETAILED:
CHECKED:
APPROVED:
DATE: November 2012
AECOM PROJECT NO. 60264606
P.R. PROJECT NO.
CADD STDS. AECOM

G00-06
SHEET 6 OF -

DWG: V:\PASO ROBLES\60264606-WTP\000 CAD\PLANSET\1-GEN\G00-06.dwg Layout Name: Layout1 - Plotted by: Rodriguez, David Date: 11/28/2012 - 3:37 PM
XREFS: G-BD-PR IMAGES: CITY OF PASO LOGO_1.png

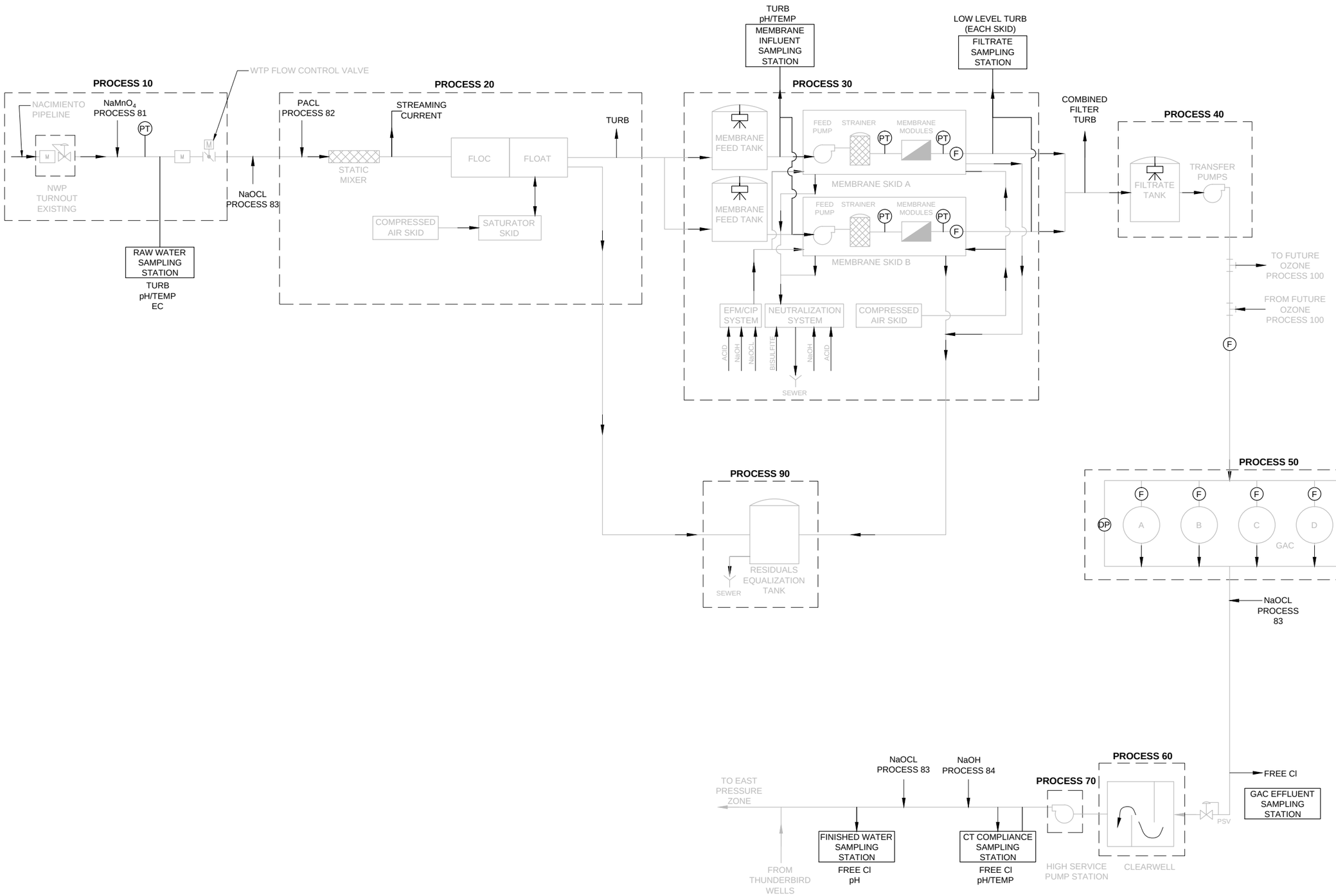

PRELIMINARY
30% SUBMITTAL

0 1/2 1
IF THIS BAR DOES NOT MEASURE 1" THEN DRAWING IS NOT TO FULL SCALE

REV	DATE	DESCRIPTION	APPR

PROJECT ENGINEER | REG NUMBER | EXP DATE

AECOM
AECOM
1194 PACIFIC STREET, SUITE 204
SAN LUIS OBISPO, CA 93401
T 805.542.9840 F 805.542.9990
www.aecom.com

CITY OF EL PASO DE ROBLES
WATER TREATMENT PLANT PROJECT

I & C PROCESS FLOW DIAGRAM

DESIGNED:
DETAILED:
CHECKED:
APPROVED:
DATE: November 2012
AECOM PROJECT NO. 60264606
P.R. PROJECT NO.
CADD STDS. AECOM

G00-07
SHEET 7 OF -

DWG: V:\PASO ROBLES\60264606-WTP\000 CAD\PLANSET\1-GEN\G00-07.dwg Layout Name: Layout1 - Plotted by: Rodriguez, David Date: 11/28/2012 - 3:37 PM
XREFS: G-BD-PR IMAGES: CITY OF PASO LOGO_1.png -

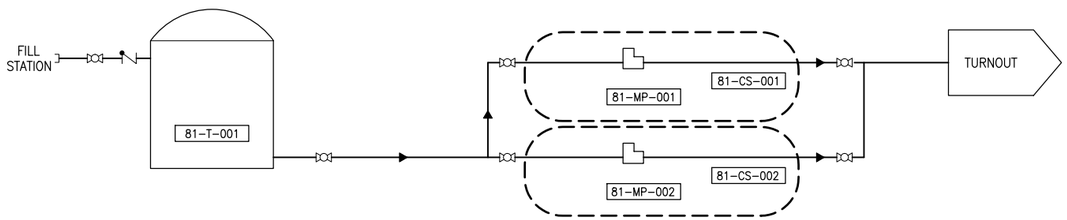

POTASSIUM PERMANGANATE SYSTEM-PROCESS 81

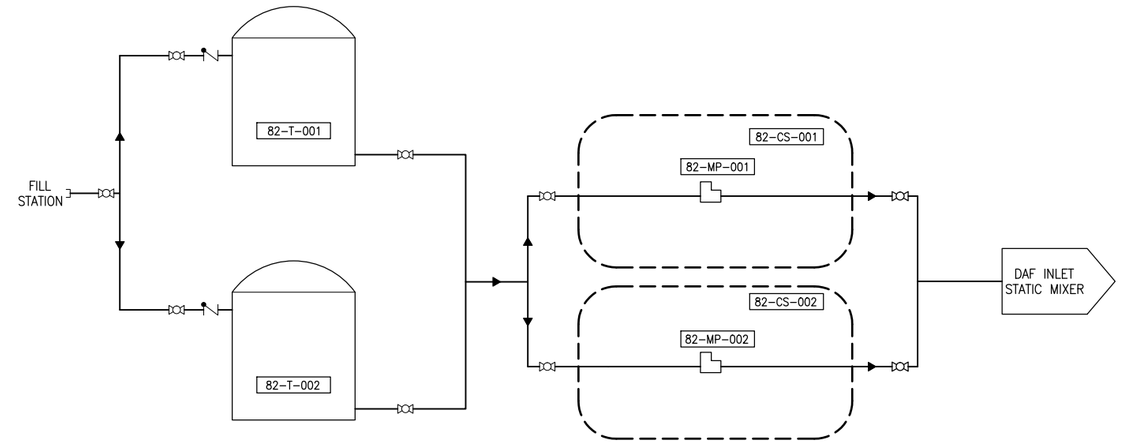

PACL FEED SYSTEM-PROCESS 82

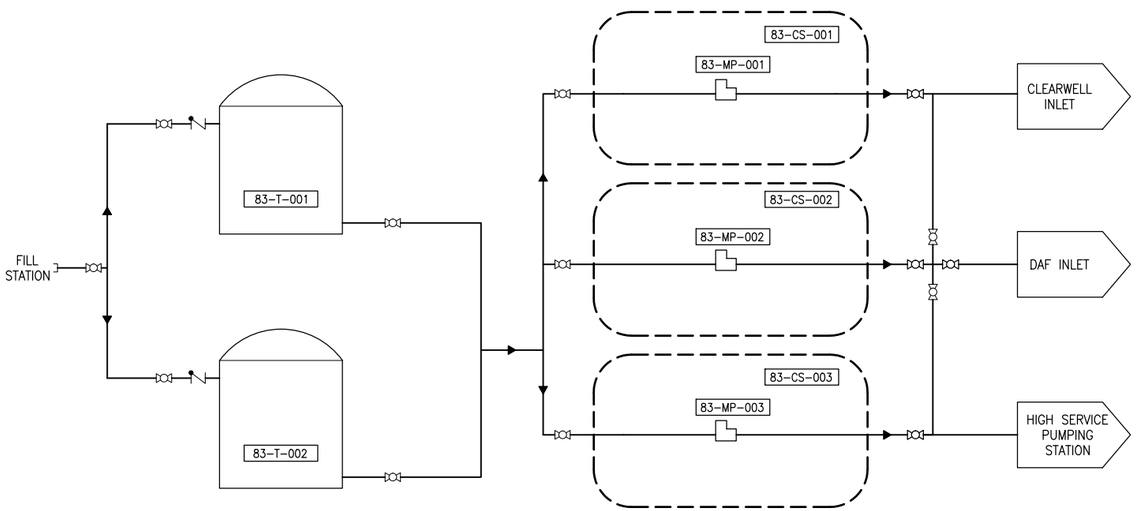

SODIUM HYPOCHLORITE FEED SYSTEM-PROCESS 83

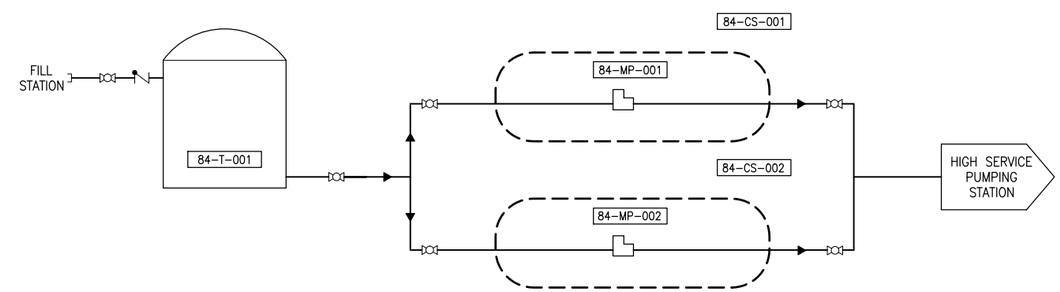

SODIUM HYDROXIDE FEED SYSTEM-PROCESS 84

NOTES:

1. DASHED BOUNDARIES INDICATE PACKAGED CHEMICAL FEED SKIDS
2. ID TAGS ARE BASED ON THE FOLLOWING FORMAT PROCESS NO. – DESCRIPTION – UNIT NO.

   MP= METERING PUMP
   CS= CHEMICAL SKID
   T=TANK
   Ⓕ = FLOW METER
   ⋈ = BALL VALVE
3. REFER TO DRAWING G00-09 FOR PACKAGED CHEMICAL SKID PIPING

PRELIMINARY 30% SUBMITTAL

0 1/2 1
IF THIS BAR DOES NOT MEASURE 1" THEN DRAWING IS NOT TO FULL SCALE

REV	DATE	DESCRIPTION	APPR

PROJECT ENGINEER | REG NUMBER | EXP DATE

AECOM
AECOM
1194 PACIFIC STREET, SUITE 204
SAN LUIS OBISPO, CA 93401
T 805.542.9840 F 805.542.9990
www.aecom.com

CITY OF EL PASO DE ROBLES
WATER TREATMENT PLANT PROJECT

PROCESS FLOW DIAGRAM (CHEMICAL 1 OF 2)

DESIGNED:
DETAILED:
CHECKED:
APPROVED:
DATE: November 2012
AECOM PROJECT NO. 60264606
P.R. PROJECT NO.
CADD STDS. AECOM

G00-08
SHEET 8 OF -

DWG: V:\PASO ROBLES\60264606-WTP\000 CAD\PLANSET\1-GEN\G00-08.dwg Layout Name: Layout1 – Plotted by: Rodriguez, David Date: 11/28/2012 – 3:37 PM
XREFS: G-BD-PR IMAGES: CITY OF PASO LOGO_1.png –

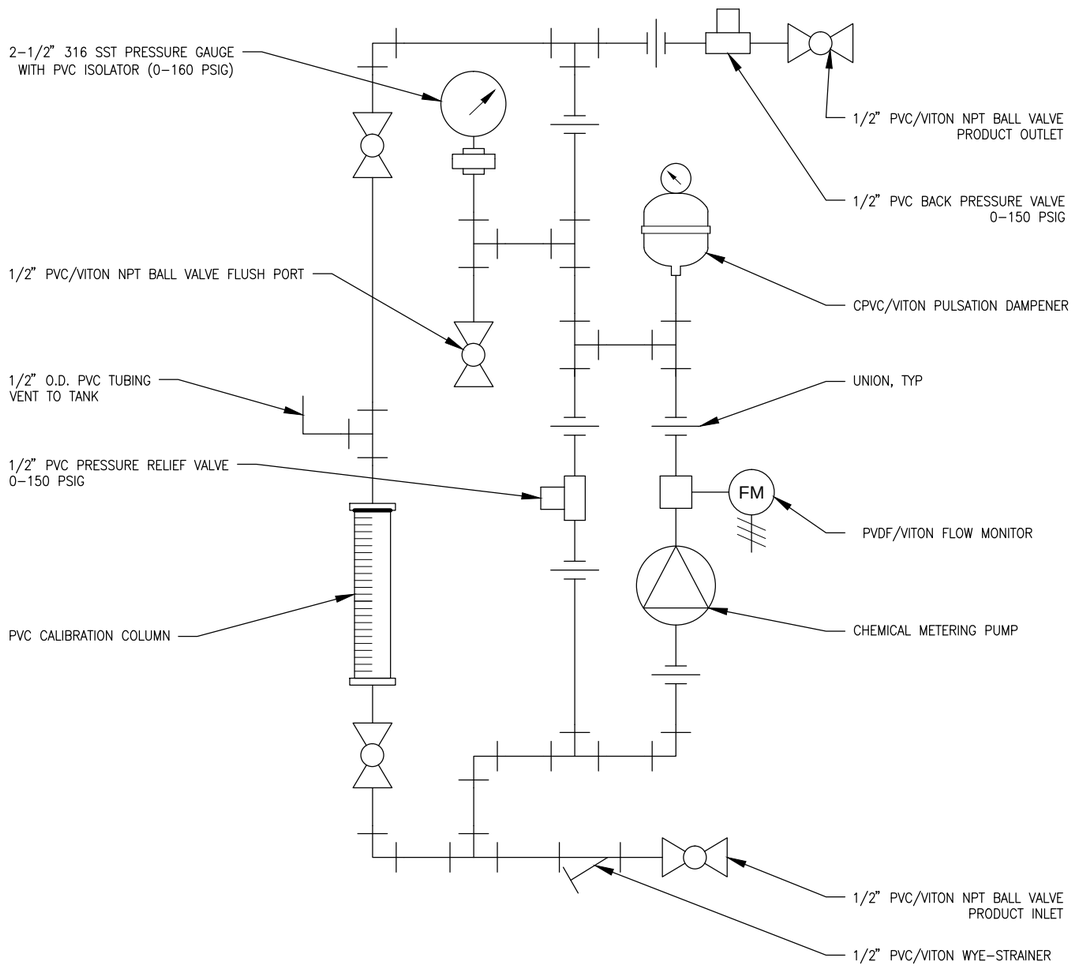

CHEMICAL METERING SKID SCHEMATIC

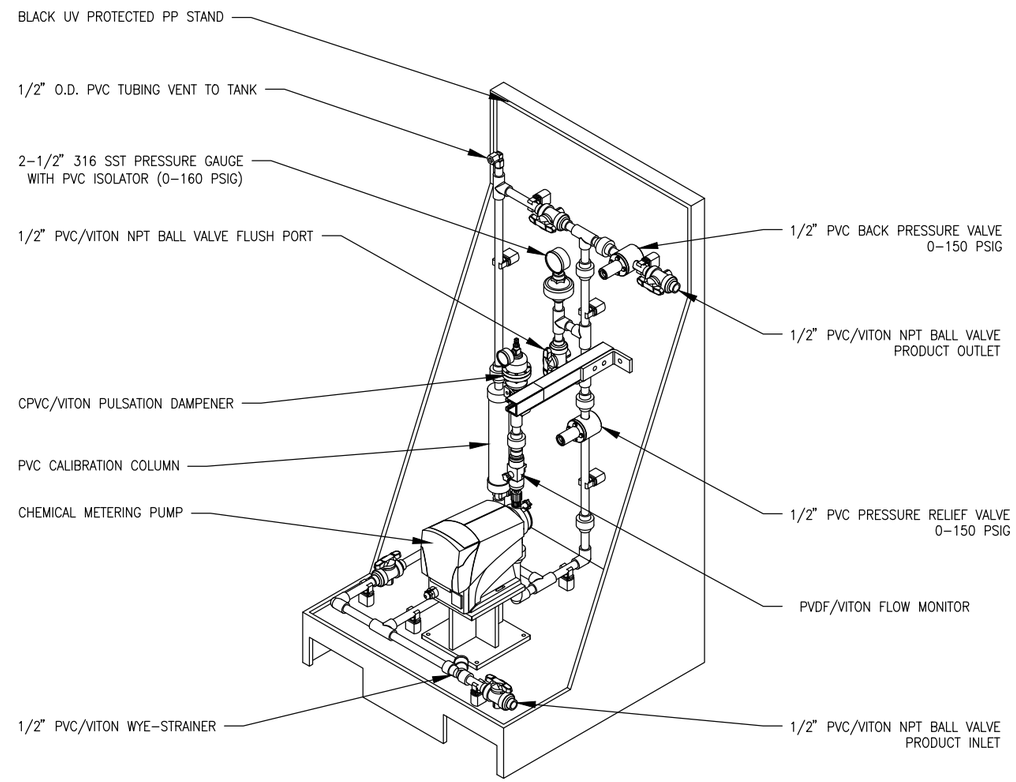

CHEMICAL METERING SKID ISOMETRIC VIEW

PRELIMINARY
30% SUBMITTAL

0 1/2 1
IF THIS BAR DOES NOT MEASURE 1" THEN DRAWING IS NOT TO FULL SCALE

REV	DATE	DESCRIPTION	APPR
1			
2			
3			
4			

PROJECT ENGINEER | REG NUMBER | EXP DATE

AECOM
AECOM
1194 PACIFIC STREET, SUITE 204
SAN LUIS OBISPO, CA 93401
T 805.542.9840 F 805.542.9990
www.aecom.com

CITY OF EL PASO DE ROBLES
WATER TREATMENT PLANT PROJECT

PROCESS FLOW DIAGRAM (CHEMICAL 2 OF 2)

DESIGNED:
DETAILED:
CHECKED:
APPROVED:
DATE: November 2012
AECOM PROJECT NO. 60264606
P.R. PROJECT NO.
CADD STDS. AECOM

G00-09
SHEET 9 OF -

DWG: V:\PASO ROBLES\60264606-WTP\000 CAD\PLANSET\1-GEN\G00-09.dwg Layout Name: Layout1 - Plotted by: Rodriguez, David Date: 11/28/2012 - 3:37 PM
XREFS: G-BD-PR IMAGES: CITY OF PASO LOGO_1.png

GENERAL NOTES:

1. PROCESSES HAVE BEEN NUMBERED AS SHOWN BELOW:
   PROCESS 10 NWP TURNOUT
   PROCESS 20 DISSOLVED AIR FLOATATION
   PROCESS 30 MEMBRANE FILTRATION
   PROCESS 40 BOOSTER PUMPING STATION
   PROCESS 50 GRANULAR ACTIVATED CARBON
   PROCESS 60 CLEARWELL
   PROCESS 70 HIGH SERVICE PUMPING STATION
   PROCESS 80 CHEMICAL SYSTEMS
   - PROCESS 81 PERMANGANATE
   - PROCESS 82 POLYALUMINUM CHLORIDE
   - PROCESS 83 SODIUM HYPOCHLORITE
   - PROCESS 84 SODIUM HYDROXIDE

   PROCESS 90 RESIDUALS MANAGEMENT
   PROCESS 100 FUTURE OZONE

2. DRAWING NAMING CONVENTION
   EACH DRAWING NAME HAS 3 PARTS. THEY ARE THE DISCIPLINE, THE PROCESS NUMBER AND A SEQUENTIAL PAGE IDENTIFIER. IN THE DRAWING NAME THE LAST "0" OF THE PROCESS NUMBER HAS BEEN DROPPED. FOR EXAMPLE SHEET P04–02 IS THE SECOND PROCESS DRAWING RELATED TO THE BOOSTER PUMPING STATION.

   ANY DRAWING WITH A "00" PREFIX DOES NOT REFER TO SPECIFIC PROCESS UNLESS NOTED OTHERWISE ON THE DRAWINGS.

3. VALVE AND EQUIPMENT NAMING CONVENTION
   EACH VALVE ID TAG HAS 3 PARTS. THE FIRST SHOWS THE PROCESS NUMBER, THE SECOND IDENTIFIES THE TYPE OF EQUIPMENT, AND THE LAST IS A SEQUENTIAL ITEM IDENTIFIER. FOR EXAMPLE 40–BWP–001 IS THE FIRST BACKWASH PUMP FOR THE TRIDENT FILTRATION AND FILTER BACKWASH SYSTEM.

4. COORDINATE NUMBERING CONVENTION
   201 COORDINATES FOR THE LAYOUT OF SURFACE FEATURES ARE IN THE 200'S AND CAN BE FOUND ON DRAWING C00–04.
   301 COORDINATES FOR GRADING FEATURES ARE IN THE 300'S AND CAN BE FOUND ON DRAWINGS C00–06 AND C00–07.
   401 COORDINATES FOR PIPING FEATURES ARE IN THE 400'S AND CAN BE FOUND ON DRAWING C00–10.

5. ANY CONTAMINATED SOIL ENCOUNTERED DURING THE WORK SHALL BE BROUGHT TO THE OWNER'S ATTENTION AND DISPOSED OF IS ACCORDANCE WITH THE REQUIREMENTS OF THE CONTRACT.

6. CONTRACTOR SHALL MAINTAIN CITY ACCESS TO THE SITE FOR MAINTAINING WATER OPERATIONS AT ALL TIMES.

7. LOCATE AND PROTECT EXISTING UTILITIES AND STRUCTURES. THE INDICATED LOCATIONS AND DEPTHS OF EXISTING UNDERGROUND STRUCTURES AND UTILITIES ARE APPROXIMATE AND BASED ON INFORMATION PROVIDED BY UTILITY COMPANIES AND/OR HAVE BEEN LOCATED IN THE FIELD. PRIOR TO EXCAVATION, PERFORM ADDITIONAL EXPLORATORY INVESTIGATIONS (POTHOLES), AS REQUIRED, TO DETERMINE OR CONFIRM LOCATION AND SIZE OF EXISTING UTILITIES AND PROTECT SAME FROM DAMAGE. NOTIFY CITY'S REPRESENTATIVE BY TELEPHONE AND IN WRITING OF ANY DISCREPANCIES.

8. AT LEAST SEVEN (7) WORKING DAYS BEFORE BEGINNING WORK, REQUEST UTILITY OWNERS TO MARK OR OTHERWISE INDICATE LOCATION OF SUBSURFACE FACILITIES. DETERMINE THE LOCATION AND DEPTH OF ALL SUBSURFACE FACILITIES WHICH HAVE BEEN MARKED BY THE RESPECTIVE OWNERS AND WHICH MAY AFFECT OR BE AFFECTED BY THE CONSTRUCTION ACTIVITY. TAKE DUE PRECAUTIONARY MEASURES TO PROTECT ALL UTILITIES OR STRUCTURES LOCATED AT THE SITE OR NEAR THE SITE.

9. SHEETING AND SHORING OF TRENCHES IS REQUIRED FOR WORKER PROTECTION IN CONFORMANCE WITH SPECIFICATION SECTION 007300 AND THE GENERAL CONDITIONS. SHEET AND SHORE TRENCHES TO PROTECT AGAINST:
   a. DAMAGE TO UTILITIES, FACILITIES, AND PROPERTY
   b. ADDITIONAL EXCAVATION AND BACKFILL
   c. ADDITIONAL PAVEMENT
   d. OTHER COSTS AND LIABILITIES ARISING FROM SOIL INSTABILITY

10. NOTIFY AND COORDINATE ALL RELATED WORK WITH THE FOLLOWING AGENCIES IN ACCORDANCE WITH THE SPECIFICATIONS AND THESE DRAWINGS.

    USA NORTH UTILITY LOCATING SERVICE
    NO LESS THAN TWO (2) WORKING DAYS PRIOR TO EXCAVATING, CALL
    1–800–227–2600, OR 1–800–642–2444

    CITY OF EL PASO DE ROBLES
    DITAS ESPERANZA
    THREE (3) WORKING DAYS PRIOR TO COMMENCING CONSTRUCTION ACTIVITIES,
    CALL (805) 237–3861

11. COORDINATE WITH CITY TO ENSURE UTILITY ENCROACHMENT/CROSSING PERMITS ARE IN PLACE PRIOR TO CONSTRUCTION.

12. COMPLY WITH REQUIREMENTS OF MITIGATION, MONITORING AND REPORTING PROGRAM.

13. VERIFY DIMENSIONS AND CONDITIONS AT THE SITE BEFORE STARTING WORK. ANY CONFLICT BETWEEN DETAILS OR DIMENSIONS ON THE DRAWINGS SHALL BE REPORTED PROMPTLY TO THE CITY'S REPRESENTATIVE WHO WILL DETERMINE THE INTENT OF THE DRAWINGS.

14. IF FENCES ARE REMOVED FOR CONSTRUCTION, REPLACE WITH EQUAL OR BETTER FENCING MATERIAL.

15. CONTRACTOR WORK AREA IS COMPRISED OF UNION PACIFIC RAIL ROAD PROPERTY, CITY OF PASO ROBLES RIGHT–OF–WAY, AND UTILITY EASEMENTS.

16. COMPLY WITH REQUIREMENTS OF THE ENCROACHMENT PERMIT ISSUED BY THE U.P.R.R. FOR CROSSING UNDER UNION PACIFIC RAILROAD TRACKS.

17. RESTORE ALL PAVEMENT, CONCRETE, ASPHALT, GRAVEL AND DRIVEWAY SURFACES REMOVED OR DAMAGED DURING CONSTRUCTION UNLESS OTHERWISE INDICATED ON THE PLANS. PAVEMENT RESTORATION ABOVE PIPELINE TRENCHES SHALL BE PER TRENCH DETAIL. OTHER SURFACES SHALL BE RESTORED IN–KIND UNLESS INDICATED OTHERWISE.

18. MAINTAIN ON–SITE THE LATEST SIGNED CONSTRUCTION DRAWINGS AT ALL TIMES. MAINTAIN A COMPLETE AND ACCURATE RECORD OF ALL CHANGES IN CONSTRUCTION FROM THAT SHOWN ON THE PLANS AND SPECIFICATIONS FOR THE PURPOSE OF PROVIDING A BASIS FOR RECORD DRAWINGS. NO CHANGES SHALL BE MADE WITHOUT PRIOR WRITTEN APPROVAL OF THE CITY'S REPRESENTATIVE.

19. FURNISH AND MAINTAIN CHEMICAL TOILETS FOR USE BY WORKERS AND SUBCONTRACTORS.

20. INSTALL AND MAINTAIN EROSION CONTROL MEASURES DURING CONSTRUCTION. THESE MEASURES WILL BE SUBJECT TO REVIEW AND APPROVAL BY THE CITY'S AND OR GOVERNING AGENCY'S REPRESENTATIVES.

21. PREVENT CONSTRUCTION TRAFFIC FROM TRACKING SEDIMENT AND DEBRIS ON TO PRIVATE, CITY, AND STATE ROADS OR RIGHT–OF–WAY.

22. SURVEY PREPARED BY WALLACE GROUP.

23. PROTECT ADJACENT PROPERTIES DURING THE WORK AND REPAIR DAMAGE TO LANDSCAPING, PAVING, IRRIGATION, STRUCTURES, ETC., CAUSED BY WORK.

24. STATIONING AND DISTANCES SHOWN ON THE DRAWINGS ARE BASED ON HORIZONTAL MEASUREMENTS UNLESS NOTED OTHERWISE.

25. LABELED RIM ELEVATIONS ARE APPROXIMATE. ADJUST CLEANOUT LIDS AND COVER TO MATCH GRADE.

26. JETTING, TRENCH FLOODING, ETC. TO ACHIEVE COMPACTION OF BACKFILL MATERIALS WILL NOT BE ALLOWED.

27. REPLACE ALL SIGNS, CURBS, GUTTERS, PAVEMENT MARKERS, LANDSCAPING AND OTHER OBJECTS DESTROYED OR REMOVED TEMPORARILY DUE TO CONSTRUCTION OPERATIONS. THE SURROUNDING SHALL BE RETURNED TO ORIGINAL CONDITION AFTER COMPLETION OF THE WORK TO THE SATISFACTION OF THE OWNER'S REPRESENTATIVE.

28. SERVICE LATERALS (I.E. SEWER, WATER, GAS, ELECTRIC, COMMUNICATIONS) ARE NOT ALL SHOWN ON THE PLANS. LOCATE AND PROTECT ALL SERVICE LATERALS PER SPECIFICATION SECTION 020120. REPLACE OR REPAIR SERVICE LATERALS DAMAGED BY CONSTRUCTION.

29. PROTECT OAKS TREES PER CITY TREE ORDINANCE No. 835 N.S..

PIPING NOTES:

1. ALL JOINTS ON BURIED PIPING, EXCEPT SEWER AND STORM DRAIN, SHALL BE RESTRAINED.
2. BURIED JOINTS AND FITTINGS SHALL BE FLANGED, RESTRAINED MECHANICAL JOINT, OR RESTRAINED PUSH ON FITTINGS UNLESS SPECIFICALLY NOTED ON THE DRAWINGS.
3. ADDITIONAL FITTINGS MAY BE ADDED TO BURIED PIPING TO INCREASE CONSTRUCTABILITY AT THE CONTRACTOR'S DISCRETION PROVIDED ADEQUATE THRUST RESTRAINT IS MAINTAINED. ADDITIONAL JOINTS/ FITTINGS SHALL BE AT NO COST TO THE OWNER.
4. FLANGE CONNECTIONS SHALL BE PROVIDED AT ALL FLANGED VALVES.
5. FABRICATED STEEL SPECIALS MAY BE USED IN LIEU OF FLANGED CONNECTIONS.
6. ANYWHERE A STORM DRAIN OR WASTE LINE CROSSES A WATER MAIN EITHER:
   a) ENCASE PIPE IN CONCRETE 10' CLEAR ON EACH SIDE PER THE PLANS; OR
   b) CENTER A 20' PIPE STICK ON THE CROSSING.
7. ALL ABOVE GROUND PIPING SHALL BE SUPPORTED PER SPEC SECTION 400764.
8. ALL PIPING SHOWN SCREENED/HALF–TONE ARE EITHER EXISTING OR NOT IN CONTRACT, AS NOTED.

GRADING NOTES:

1. THE CONTRACTOR IS RESPONSIBLE FOR ALL IMPORT AND EXPORT OF EARTH MATERIAL. EARTHWORK IS UNCLASSIFIED. THE CONTRACTOR SHALL ACCOUNT FOR SHRINKAGE AND EXPANSION, AND IF NECESSARY CONDUCT AN INVESTIGATION TO DETERMINE THE SHRINKAGE AND EXPANSION FACTORS. THE CONTRACTOR WILL NOT BE COMPENSATED FOR ADDITIONAL EARTHWORK NOT INCLUDED AT THE TIME OF THE BID.
2. THE CONTRACTOR IS RESPONSIBLE FOR DISPOSAL OF ALL EXCESS SOIL.
3. ALL SITE GRADING SHALL COMPLY WITH THE 2010 CALIFORNIA BUILDING CODE.
4. THE GROUND IMMEDIATELY ADJACENT TO ALL FOUNDATIONS SHALL BE SLOPED AWAY FROM THE BUILDING AT A SLOPE OF NOT LESS THAN 2% FOR A MINIMUM DISTANCE OF 10 FEET MEASURED PERPENDICULAR TO THE FACE OF THE WALL. IF PHYSICAL OBSTRUCTIONS OR LOT LINES PROHIBIT 10 FEET OF HORIZONTAL DISTANCE FROM THE FOUNDATION, THEN A SWALE THAT RUNS PARALLEL TO THE FOUNDATION MAY BE USED AND WILL BE REQUIRED TO BE A MINIMUM SLOPE OF 2% WITHIN 10 FEET OF THE BUILDING FOUNDATION. ALL OTHER SITE GRADING OUTSIDE OF THE BUILDING ENVELOPE IS REQUIRED TO BE A MINIMUM OF 0.5%.
5. RECOMMENDATIONS AS OUTLINED IN THE FOLLOWING GEOTECHNICAL INVESTIGATION REPORT BY FUGRO SHALL BECOME REQUIREMENTS FOR THIS DEVELOPMENT:
   - GEOTECHNICAL DATA REPORT, DATED FEBRUARY 5, 2009
   - GEOTECHNICAL INTERPRETIVE REPORT, DATED FEBRUARY 5, 2009
   - TBD
6. THE LIMITS OF GRADING SHALL BE ALONG THE PROPERTY LINE UNLESS NOTED OTHERWISE ON THE PLANS.

PRELIMINARY
30% SUBMITTAL

0 1/2 1
IF THIS BAR DOES NOT MEASURE 1" THEN DRAWING IS NOT TO FULL SCALE

REV	DATE	DESCRIPTION	APPR

PROJECT ENGINEER REG NUMBER EXP DATE

AECOM
AECOM
1194 PACIFIC STREET, SUITE 204
SAN LUIS OBISPO ,CA 93401
T 805.542.9840 F 805.542.9990
www.aecom.com

CITY OF EL PASO DE ROBLES
WATER TREATMENT PLANT PROJECT

GENERAL NOTES

DESIGNED:
DETAILED:
CHECKED:
APPROVED:
DATE: November 2012
AECOM PROJECT NO. 60264606
P.R. PROJECT NO.
CADD STDS. AECOM

C00-01
SHEET 10 OF -

DWG: V:\PASO ROBLES\60264606-WTP\000 CAD\PLANSET\2-CIVIL\C00-01.dwg Layout Name: Layout1 – Plotted by: Rodriguez, David Date: 11/28/2012 – 3:38 PM
XREFS: G–BD–PR IMAGES: CITY OF PASO LOGO_1.png –

LOCAL CONTROL POINTS	NORTHING	EASTING	ELEVATION	DESCRIPTION
13	2413050.84	5761284.81	731.34	SET PK NAIL
14	2412202.77	5761359.98	732.63	SET PK NAIL
15	2412396.09	5761232.05	736.58	SET PK NAIL
17	2412705.86	5761352.46	727.65	SET PK NAIL
18	2413010.25	5761384.99	728.41	SET SCRIBED X
19	2413070.13	5761716.93	721.34	SET #5 REBAR
21	2412992.32	5761334.97	730.45	FOUND BM THUNDERBIRD 13
34	2411478.05	5761134.39	739.04	SET 2"X2" AND TACK
37	2412384.87	5761295.77	736.10	FOUND BM THUNDERBIRD 17
38	2411799.37	5761330.54	736.69	SET #5 REBAR
90	2412981.33	5761777.14	721.91	FOUND BM THUNDERBIRD 10

NOTES:

1. THIS MAP REPRESENTS A SURVEY MADE BY WALLACE GROUP ON AUGUST 14–16, 2007.

BASIS OF BEARINGS
THIS SURVEY TIED TO ONE "B" ORDER STATION AND ONE FIRST ORDER STATION OF THE HIGH PRECISION GEODETIC NETWORK (HPGN). THOSE STATIONS ARE THE NATIONAL GEODETIC SURVEY CONTROL POINTS DESIGNATED "PRB AP 1965 STA B2", HAVING A PUBLISHED POSITION OF NORTHING 2,443,008.07', EASTING 5,781,265.39'; AND "HPGN D 05 ML", HAVING A PUBLISHED POSITION OF NORTHING 2,431350.01', EASTING 5,765,395.56'. THE RESULTING BEARING FROM "PRB AP 1965 STA B2" TO "HPGN D 05 ML" BEING: S 53°41'55.69" W. THE BEARINGS SHOWN HEREON ARE REFERENCED TO CCS83, ZONE 5 GRID NORTH.

BASIS OF ELEVATIONS
VERTICAL CONTROL IS BASED ON CITY OF PASO ROBLES BENCHMARK "TBIRD–13" HAVING AN ELEVATION OF 730.45 PER CITY OF PASO ROBLES BENCHMARK BOOK.

CONTOUR INTERVAL
CONTOUR INTERVAL FOR FIELD MAPPING IS 1'. THIS IS THE AREA INSIDE THE CHAIN LINK FENCE SURROUNDING THE THUNDERBIRD WELL SITE. CONTOUR INTERVAL IS 2' FOR THE AERIAL MAPPING SHOWN, SEE NOTE 3.

BASIS OF MEASUREMENTS
ALL MEASUREMENTS LISTED, SHOWN AND REPRESENTED HEREON ARE BASED ON GRID DISTANCES OF THE CALIFORNIA COORDINATE SYSTEM OF 1983 ZONE 5 PROJECTION. THE COMBINED SCALE FACTOR FOR THE PROJECT IS 0.99995128. THIS SCALE FACTOR WAS CALCULATED USING AN ELEVATION OF 730.45 FEET FOR "BM THUNDERBIRD 13" (PT. NO. 21). DIVIDE THE DISTANCES HEREON BY THE COMBINED SCALE FACTOR TO OBTAIN GROUND DISTANCES. ALL DISTANCES SHOWN ARE U.S. SURVEY FEET.

2. AERIAL SURVEY ORTHOPHOTOGRAPHY PRODUCED BY:
GOLDEN STATE AERIALS, INC.
3195 MCMILLAN RD. SUITE E
SAN LUIS OBISPO, CA 93401
PHONE: (805) 549–0399

PHOTOGRAPHY DATED: MARCH 2005

THIS AERIAL MAPPING IS SHOWN OUTSIDE OF THE CHAIN LINK FENCE SURROUNDING THE THUNDERBIRD WELL SITE. THE CONTOUR INTERVAL IS 2' FOOT.

3. UNDERGROUND UTILITY LOCATIONS ARE PLOTTED BASED ON ABOVE GROUND PAINT MARKS BY OTHERS, ABOVE GROUND SURFACE STRUCTURES AND RECORD DRAWINGS. ACTUAL LOCATION MAY DIFFER. ADDITIONAL UNDERGROUND UTILITY LINES MAY EXIST. FOR INFORMATION REGARDING UTILITY LOCATION, SIZE, DEPTH, CONDITION, AND CAPACITY CONTACT UTILITY OR MUNICIPAL/PUBLIC SERVICE FACILITY.

4. EASEMENTS ARE BASED ON CUESTA PTR T7800675 DATED 08/02/2007.
070/OR/358 BLANKET GAS LINE EASEMENT OVER LOTS 1 & 2 A/MB/164.
3491/OR/822 BLANKET DRAINAGE EASEMENT OVER ALL THE PORTION OF LOT 2 A/MB/164.

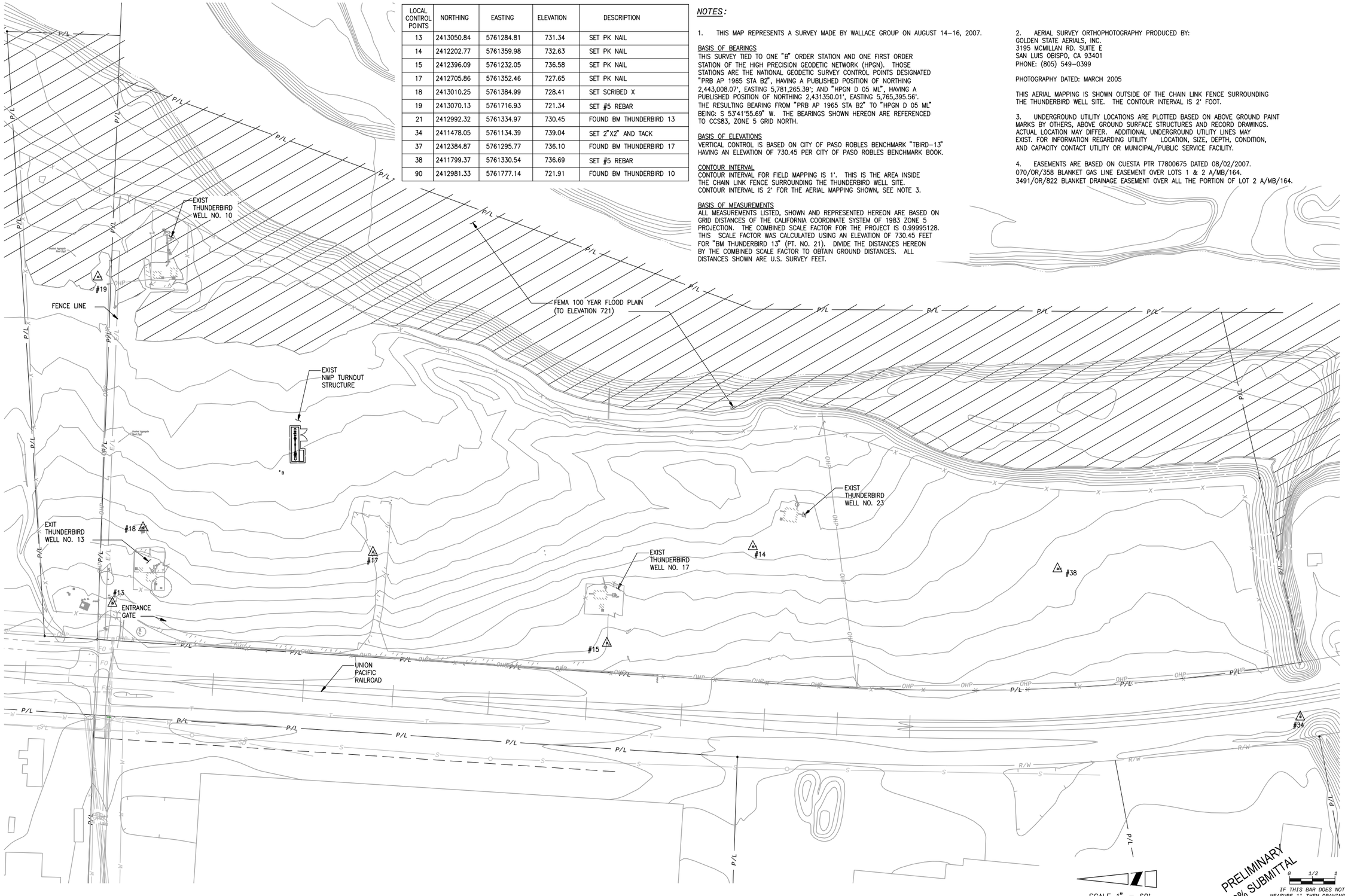

REV	DATE	DESCRIPTION	APPR

PROJECT ENGINEER | REG NUMBER | EXP DATE

AECOM
AECOM
1194 PACIFIC STREET, SUITE 204
SAN LUIS OBISPO, CA 93401
T 805.542.9840 F 805.542.9990
www.aecom.com

CITY OF EL PASO DE ROBLES
WATER TREATMENT PLANT PROJECT

SITE SURVEY CONTROL AND NOTES

DESIGNED: JJR
DETAILED: JPF
CHECKED:
APPROVED:
DATE: November 2012
AECOM PROJECT NO. 60264606
P.R. PROJECT NO.
CADD STDS. AECOM

C00-01A
SHEET
- OF -

DWG: V:\PASO ROBLES\60264606-WTP\000 CAD\PLANSET\2-CIVIL\C00-01A.dwg Layout Name: Layout1 – Plotted by: Rodriguez, David Date: 11/28/2012 – 3:39 PM
XREFS: C-Y-BOUNDARY-E – C-W-UTILITY-E – C-Y-TOPO-EX – C-Y-FEATURES-E – G-BD-PR IMAGES: CITY OF PASO LOGO_1.png –

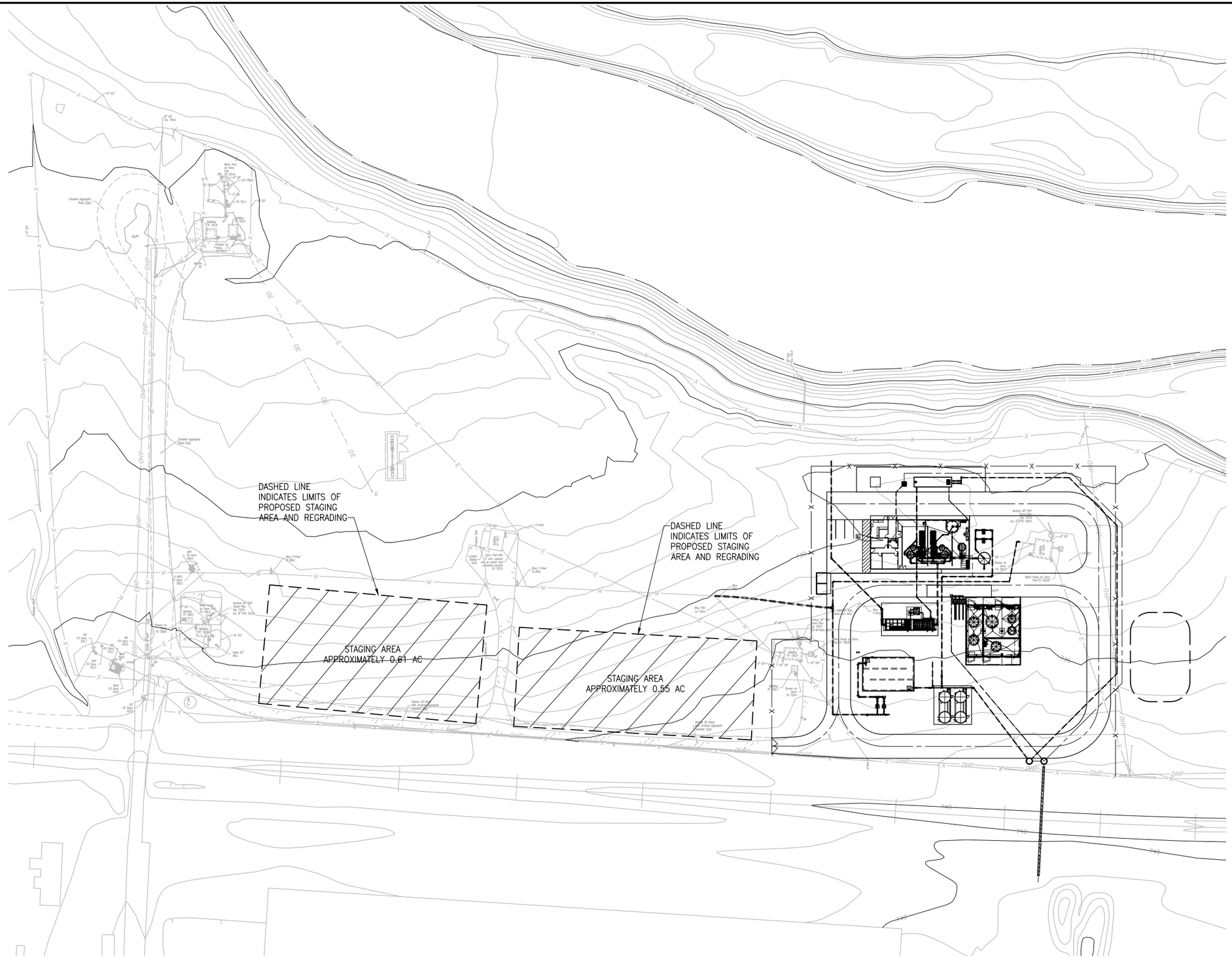

STAGING NOTES:

1. CONTRACTOR IS REQUIRED TO RETURN STAGING AREA TO PREVIOUS CONDITION PRIOR TO PROJECT COMPLETION.
2. ACCESS TO EXISTING FACILITIES IS TO REMAIN AT ALL TIMES.

SCALE 1" = 50'

PRELIMINARY
30% SUBMITTAL

0 1/2 1
IF THIS BAR DOES NOT MEASURE 1" THEN DRAWING IS NOT TO FULL SCALE

REV	DATE	DESCRIPTION	APPR

PROJECT ENGINEER | REG NUMBER | EXP DATE

AECOM
AECOM
1194 PACIFIC STREET, SUITE 204
SAN LUIS OBISPO, CA 93401
T 805.542.9840 F 805.542.9990
www.aecom.com

CITY OF EL PASO DE ROBLES
WATER TREATMENT PLANT PROJECT

CONSTRUCTION & STAGING PLAN

DESIGNED:
DETAILED:
CHECKED:
APPROVED:
DATE: November 2012
AECOM PROJECT NO. 60264606
P.R. PROJECT NO.
CADD STDS. AECOM

C00-02
SHEET 12 OF -

DWG: V:\PASO ROBLES\60264606-WTP\000 CAD\PLANSET\2-CIVIL\C00-02.dwg Layout Name: 34x22 - Plotted by: Rodriguez, David Date: 11/29/2012 - 8:15 AM
XREFS: C-BD-PR - C-Y-FEATURES-E - C-Y-TOPO-EX - C-LP-PR - S-RP-06 - D-FP-CHEM-PIPING - S-NP-09 - A-FP-MEMB IMAGES: CITY OF PASO LOGO_1.png -

GENERAL DEMOLITION NOTES:

1. SEE SPECIFICATION SECTION 024100 FOR DETAILED REQUIREMENTS.

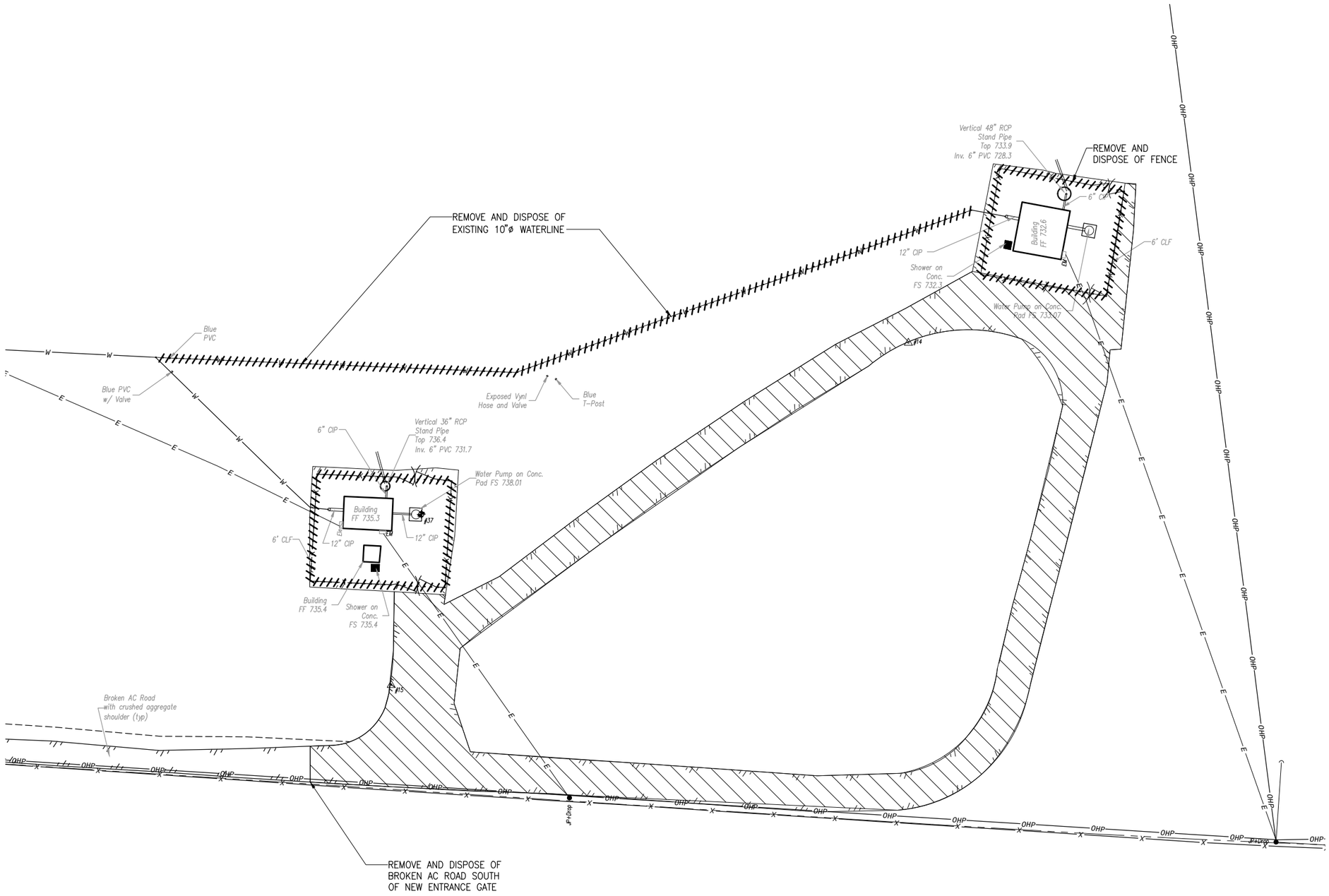

SCALE 1" = 20'

PRELIMINARY
30% SUBMITTAL

0 1/2 1
IF THIS BAR DOES NOT MEASURE 1" THEN DRAWING IS NOT TO FULL SCALE

REV	DATE	DESCRIPTION	APPR
1			
2			
3			
4			

PROJECT ENGINEER | REG NUMBER | EXP DATE

AECOM
AECOM
1194 PACIFIC STREET, SUITE 204
SAN LUIS OBISPO, CA 93401
T 805.542.9840 F 805.542.9990
www.aecom.com

CITY OF EL PASO DE ROBLES
WATER TREATMENT PLANT PROJECT

SITE DEMOLITION PLAN

DESIGNED:
DETAILED:
CHECKED:
APPROVED:
DATE: November 2012
AECOM PROJECT NO. 60264606
P.R. PROJECT NO.
CADD STDS. AECOM

C00-03
SHEET
- OF -

DWG: V:\PASO ROBLES\60264606-WTP\000 CAD\PLANSET\2-CIVIL\C00-03.dwg Layout Name: 34x22 - Plotted by: Rodriguez, David Date: 11/28/2012 - 3:39 PM
XREFS: G-BD-PR - C-Y-TOPO-EX - C-Y-FEATURES-E - C-W-UTILITY-E - C-Y-BOUNDARY-E IMAGES: CITY OF PASO LOGO_1.png -

LAYOUT COORDINATES

POINT	NORTHING	EASTING
201		
202		
203		
204		
205		
206		
207		
208		
209		
210		
211		
212		
213		
214		
215		
216		
217		
218		
219		
220		
221		
222		
223		
224		
225		
226		
227		
228		
229		
230		
231		
232		
233		
234		
235		
236		
237		
238		
239		
240		
241		
242		
243		
244		
245		

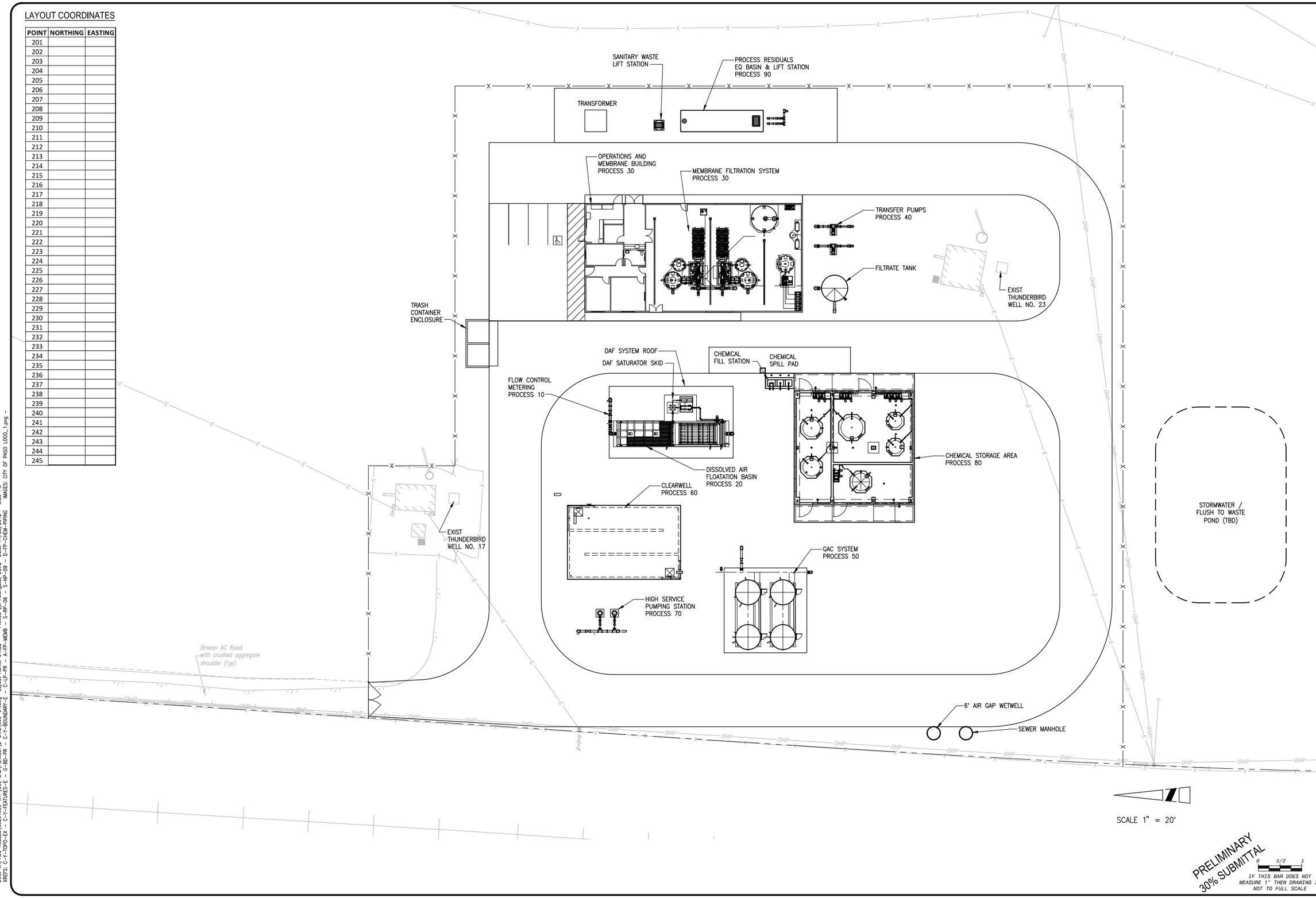

REV	DATE	DESCRIPTION	APPR

PROJECT ENGINEER | REG NUMBER | EXP DATE

AECOM
AECOM
1194 PACIFIC STREET, SUITE 204
SAN LUIS OBISPO, CA 93401
T 805.542.9840 F 805.542.9990
www.aecom.com

CITY OF EL PASO DE ROBLES
WATER TREATMENT PLANT PROJECT

SITE PLAN

DESIGNED:
DETAILED:
CHECKED:
APPROVED:
DATE: November 2012
AECOM PROJECT NO. 60264606
P.R. PROJECT NO.
CADD STDS. AECOM

C00-04
SHEET 14 OF -

DWG: V:\PASO ROBLES\60264606-WTP\000 CAD\PLANSET\2-CIVIL\C00-04.dwg Layout Name: 34x22 – Plotted by: Rodriguez, David Date: 11/28/2012 – 3:39 PM
XREFS: C-Y-TOPO-EX – C-Y-FEATURES-E – G-BD-PR – C-Y-BOUNDARY-E – C-LP-PR – A-FP-MEMB – S-RP-06 – S-NP-09 – D-FP-CHEM-PIPING IMAGES: CITY OF PASO LOGO_1.png

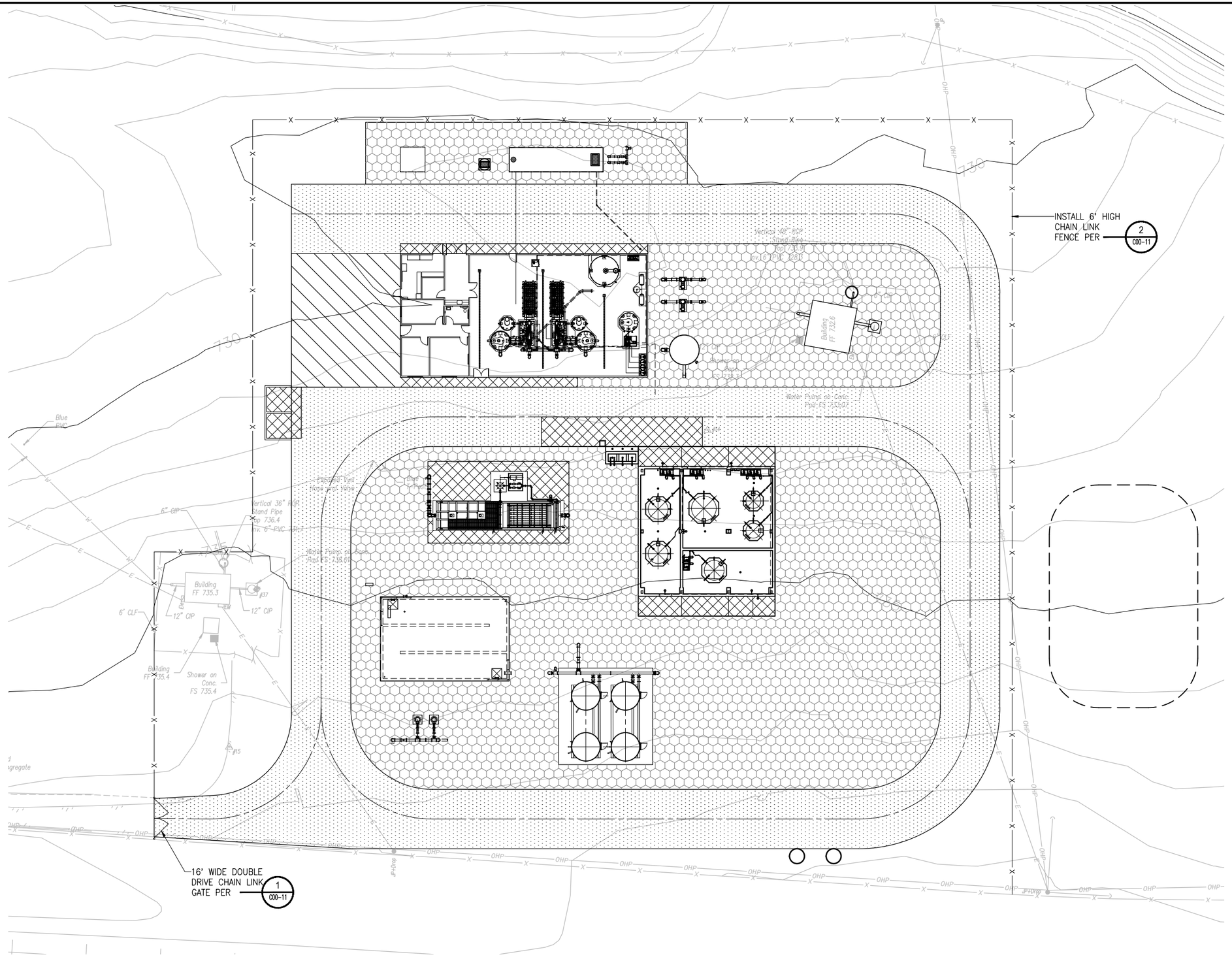

NOTES:

LEGEND

- ASPHALT CONCRETE PAVEMENT — 1 C00-12
- CONCRETE SLAB (SEE STRUCTURAL DRAWINGS)
- GRAVEL ROAD — 3 C00-12
- 3" CRUSHED ROCK SURFACE — 2 C00-12

PRELIMINARY 30% SUBMITTAL

0 1/2 1

IF THIS BAR DOES NOT MEASURE 1" THEN DRAWING IS NOT TO FULL SCALE

REV	DATE	PROJECT ENGINEER	DESCRIPTION	REG NUMBER	EXP DATE	APPR

AECOM

AECOM
1194 PACIFIC STREET, SUITE 204
SAN LUIS OBISPO, CA 93401
T 805.542.9840 F 805.542.9990
www.aecom.com

CITY OF EL PASO DE ROBLES
INCORPORATED 1889

CITY OF EL PASO DE ROBLES
WATER TREATMENT PLANT PROJECT

GRADING AND PAVING PLAN

DESIGNED:
DETAILED:
CHECKED:
APPROVED:
DATE: November 2012
AECOM PROJECT NO. 60264606
P.R. PROJECT NO.
CADD STDS. AECOM

C00-05
SHEET
- OF -

DWG: V:\PASO ROBLES\60264606-WTP\000 CAD\PLANSET\2-CIVIL\C00-05.dwg Layout Name: 34x22 - Plotted by: Rodriguez, David Date: 11/28/2012 - 3:40 PM
XREFS: G-BD-PR - C-Y-FEATURES-E - C-Y-TOPO-EX - C-LP-PR - S-RP-06 - D-FP-CHEM-PIPING - S-NP-09 - A-FP-MEMB IMAGES: CITY OF PASO LOGO_1.png -

PIPING COORDINATES

POINT	NORTHING	EASTING
401		
402		
403		
404		
405		
406		
407		
408		
409		
410		
411		
412		
413		
414		
415		
416		
417		
418		
419		
420		
421		
422		
423		
424		
425		
426		
427		
428		
429		
430		
431		
432		
433		
434		
435		
436		
437		
438		
439		
440		
441		
442		
443		
444		
445		

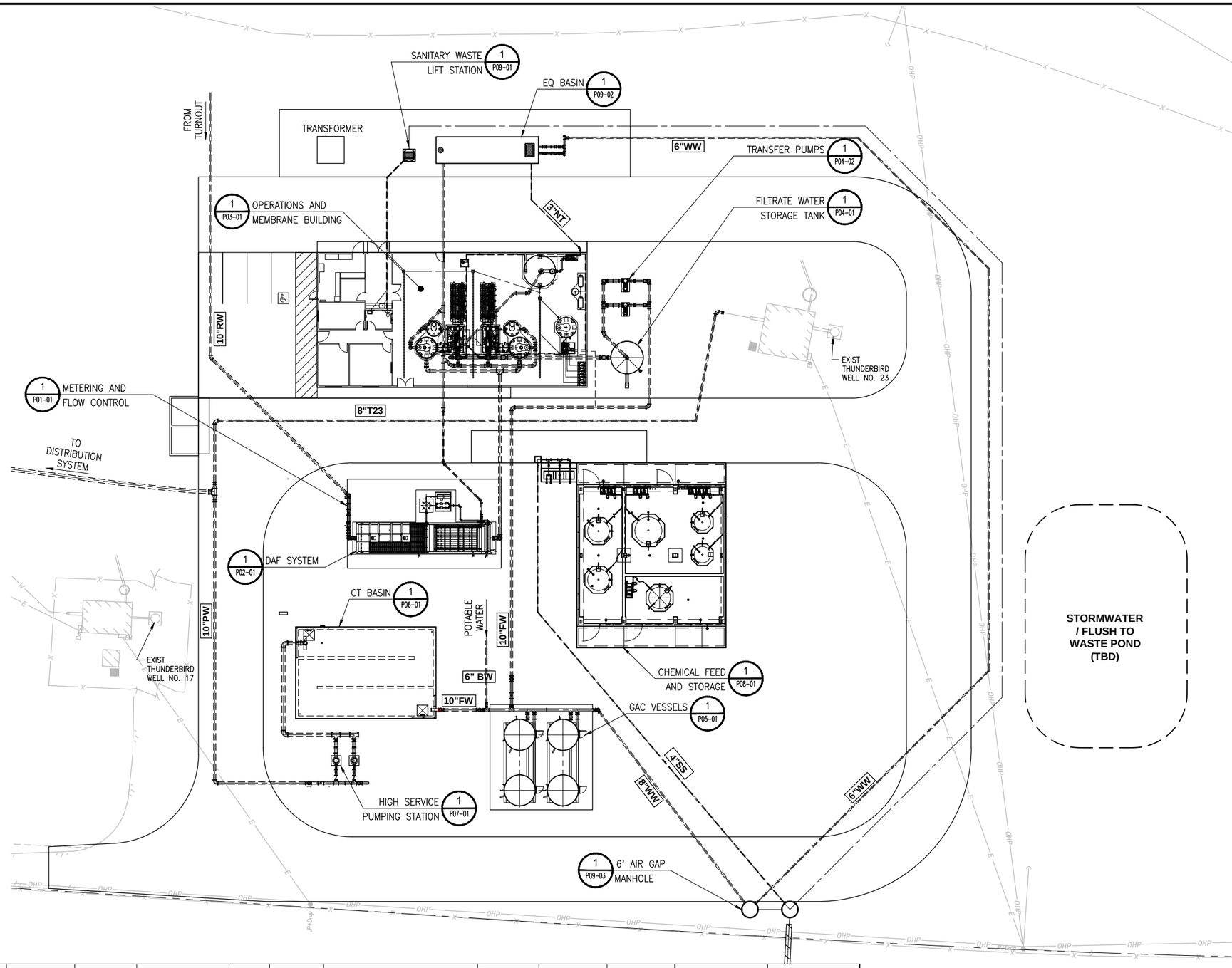

PROCESS PIPE SCHEDULE

PIPING SERVICE DESIGNATION	PIPING SERVICE DESCRIPTION	BURIED PIPING MATERIAL	ABOVE-GRADE PIPING MATERIAL	DESIGN PRESSURE (PSI)	TEST PRESSURE (PSI)	COMMENTS
AIR	AIR	CU	CU	100	125	TEST WITH AIR
D	DRAIN LINE	PVCG, DIP, WSP	DIP, WSP	< 5	-	SEE §330130
FLT	FLOAT	PVCG, DIP, WSP	DIP, WSP	< 5	-	SEE §330130
FW	FILTERED WATER	PVC, DIP, WSP	DIP, WSP	< 5	-	SEE §330130
FTW	FILTER TO WASTE WATER	PVCG, DIP, WSP	DIP, WSP	< 5	-	SEE §330130
HW	HOT WATER	CU	CU	70	125	
PW	POTABLE WATER	PVC, DIP, WSP	DIP, WSP	70	125	
RW	RAW WATER	PVC, DIP, WSP	DIP, WSP	20	50	
SD	STORM DRAIN	PVCG, DIP, RCP, WSP	-	< 5	-	SEE §330130
SL	SLUDGE	PVC, DIP, WSP	DIP, WSP	20	50	
SS	SANITARY SEWER	CISP, PVCG	-	< 5	-	SEE §330130
WW	WASHWATER	PVC, DIP, WSP	DIP, WSP	5	25	

MATERIAL DESIGNATION	DESCRIPTION	SPECIFICATION	BURIED LINING	BURIED COATING	EXPOSED LINING	EXPOSED COATING
WSP	WELDED STEEL PIPE	402001 & 402066	CEMENT MORTAR	TAPE WRAPPED	FUSION BONDED EPOXY	FUSION BONDED EPOXY
DIP	DUCTILE IRON PIPE	402040	CEMENT MORTAR	PE ENCASMENT	FUSION BONDED EPOXY	FUSION BONDED EPOXY
RCP	ASTM C76 REINFORCED CONCRETE PIPE	334216				
PVCG	ASTM D3034 & F679 GRAVITY PVC	333112				
RCP	ASTM C76 REINFORCED CONCRETE PIPE	334216				
SCH 80 PVC	SCHEDULE 80 SOLVENT WELD PVC	402090				
					CEMENT MORTAR	§099000 SYSTEM 10

SCALE 1" = 20'

PRELIMINARY 30% SUBMITTAL

0 1/2 1
IF THIS BAR DOES NOT MEASURE 1" THEN DRAWING IS NOT TO FULL SCALE

REV	DATE	DESCRIPTION	APPR

PROJECT ENGINEER | REG NUMBER | EXP DATE

AECOM
AECOM
1194 PACIFIC STREET, SUITE 204
SAN LUIS OBISPO, CA 93401
T 805.542.9840 F 805.542.9990
www.aecom.com

CITY OF EL PASO DE ROBLES
WATER TREATMENT PLANT PROJECT

YARD PROCESS PIPING PLAN

DESIGNED:
DETAILED:
CHECKED:
APPROVED:
DATE: November 2012
AECOM PROJECT NO. 60264606
P.R. PROJECT NO.
CADD STDS. AECOM

C00-06
SHEET 16 OF -

DWG: V:\PASO ROBLES\60264606-WTP\CDD CAD\PLANSET\2-CIVIL\C00-06.dwg Layout Name: 34x22 – Plotted by: Rodriguez, David Date: 11/28/2012 – 3:40 PM
XREFS: C-Y-TOPO-EX – C-Y-FEATURES-E – G-BD-PR – C-Y-BOUNDARY-E – C-LP-PR – A-FP-MEMB – S-NP-09 – D-FP-CHEM-PIPING – S-RP-06 IMAGES: CITY OF PASO LOGO_1.png

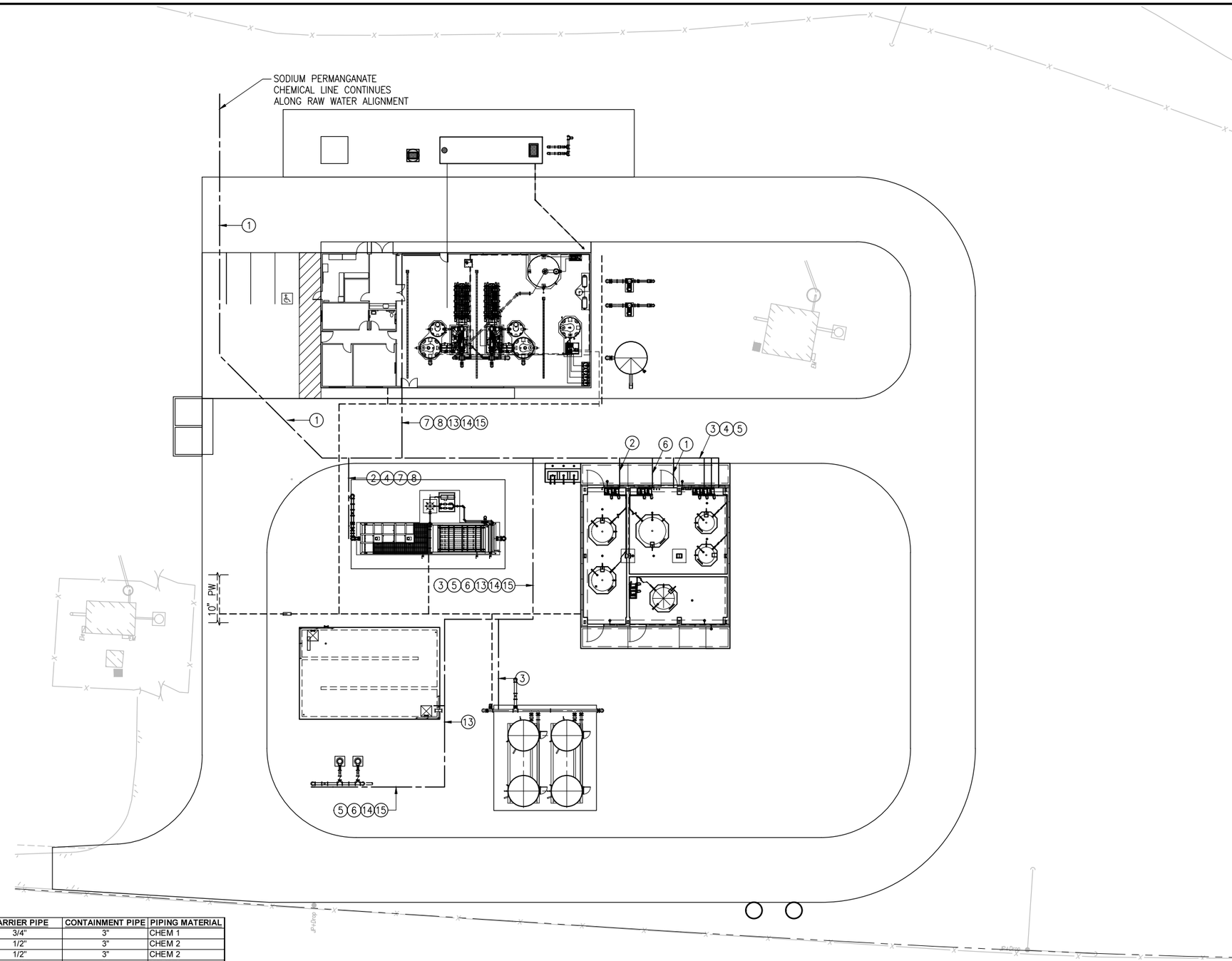

LEGEND

- - - - - - POTABLE WATER

—— - - —— CHEMICAL/SAMPLE LINES

CHEMICAL PIPING SCHEDULE

MATERIAL DESIGNATION	DESCRIPTION	SPECIFICATION
CHEM 1	DOUBLE CONTAINED CHEMICAL FEED	§402090
CHEM 2	PE TUBING INSIDE EPVC	
SCH 80 PVC	SCHEDULE 80 SOLVENT WELD PVC	§402468

CHEMICAL AND SAMPLE LINES

NO.	DESCRIPTION	LOCATION	CARRIER PIPE	CONTAINMENT PIPE	PIPING MATERIAL
1	SODIUM PERMANAGNATE	RAW WATER SCREENING STRUCTURE	3/4"	3"	CHEM 1
2	POLYALUMINUM CHLORIDE	DAF STATIC MIXER	1/2"	3"	CHEM 2
3	SODIUM HYPOCHLORITE	GAC OUTLET	1/2"	3"	CHEM 2
4	SODIUM HYPOCHLORITE	DAF INLET	1/2"	3"	CHEM 2
5	SODIUM HYPOCHLORITE	HIGH SERVICE PUMPING STATION	1/2"	3"	CHEM 2
6	SODIUM HYDROXIDE	HIGH SERVICE PUMPING STATION	1/2"	3"	CHEM 2
7	RAW WATER SAMPLE	FLOW CONTROL SECTION	1/2"	-	SCH 80 PVC
8	STREAMING CURRENT SAMPLE	DAF INLET	1/2"	-	SCH 80 PVC
9	CLARIFIED WATER SAMPLE	MEMBRANE FEED MANIFOLD	1/2"	-	SCH 80 PVC
10	TRAIN 'A' FILTER EFFLUENT SAMPLE	MFS SKID A EFFLUENT PIPING	1/2"	-	SCH 80 PVC
11	TRAIN 'B' FILTER EFFLUENT SAMPLE	MFS SKID B EFFLUENT PIPING	1/2"	-	SCH 80 PVC
12	COMBINED FILTER EFFLUENT SAMPLE	COMBINED MFS EFFLUENT MANIFOLD	1/2"	-	SCH 80 PVC
13	GAC EFFLUENT SAMPLE	CLEARWELL INLET	1/2"	-	SCH 80 PVC
14	CT COMPLIANCE SAMPLE	HIGH SERVICE PUMPING STATION	1/2"	-	SCH 80 PVC
15	FINISHED WATER SAMPLE	HIGH SERVICE PUMP STATION PIPING	1/2"	-	SCH 80 PVC

SCALE 1" = 20'

PRELIMINARY
30% SUBMITTAL

0 1/2 1
IF THIS BAR DOES NOT MEASURE 1" THEN DRAWING IS NOT TO FULL SCALE

REV	DATE	DESCRIPTION	APPR

PROJECT ENGINEER | REG NUMBER | EXP DATE

AECOM
AECOM
1194 PACIFIC STREET, SUITE 204
SAN LUIS OBISPO, CA 93401
T 805.542.9840 F 805.542.9990
www.aecom.com

CITY OF EL PASO DE ROBLES
WATER TREATMENT PLANT PROJECT

YARD CHEMICAL, SERVICE WATER AND SAMPLE PLAN

DESIGNED:
DETAILED:
CHECKED:
APPROVED:
DATE: November 2012
AECOM PROJECT NO. 60264606
P.R. PROJECT NO.
CADD STDS. AECOM

C00-07
SHEET 17 OF -

DWG: V:\PASO ROBLES\60264606-WTP\000 CAD\PLANSET\2-CIVIL\C00-07.dwg Layout Name: 34x22 - Plotted by: Rodriguez, David Date: 11/28/2012 - 3:40 PM
XREFS: C-Y-TOPO-EX - C-Y-FEATURES-E - C-BD-PR - C-Y-BOUNDARY-E - C-LP-PR - A-FP-MEMB - S-RP-06 - S-NP-09 - D-FP-CHEM-PIPING IMAGES: CITY OF PASO LOGO_1.png -

DWG: V:\PASO ROBLES\60264606-WTP\000 CAD\PLANSET\2-CIVIL\C00-08.dwg Layout Name: 34x22 - Plotted by: Rodriguez, David Date: 11/29/2012 - 8:17 AM
XREFS: G-BD-PR - C-Y-FEATURES - C-Y-FEATURES-E - C-Y-TOPO-EX - Aerial - C-W-UTILITY-E - C-Y-BOUNDARY-E - C-LP-PR - S-RP-06 - D-FP-CHEM-PIPING - S-NP-09 - A-FP-MEMB IMAGES: CITY OF PASO LOGO_1.png -

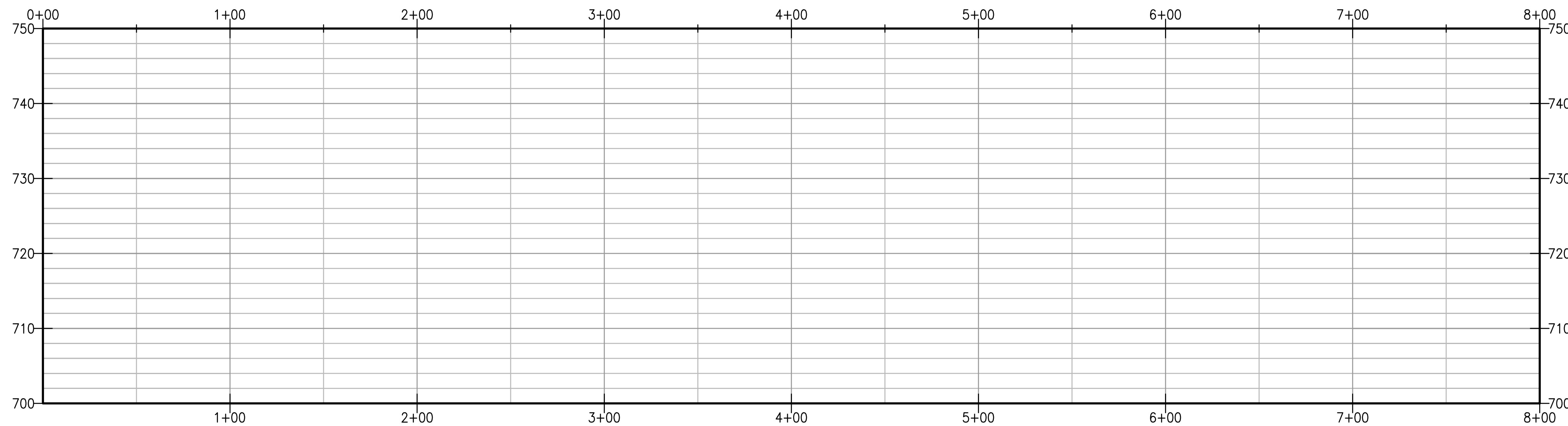

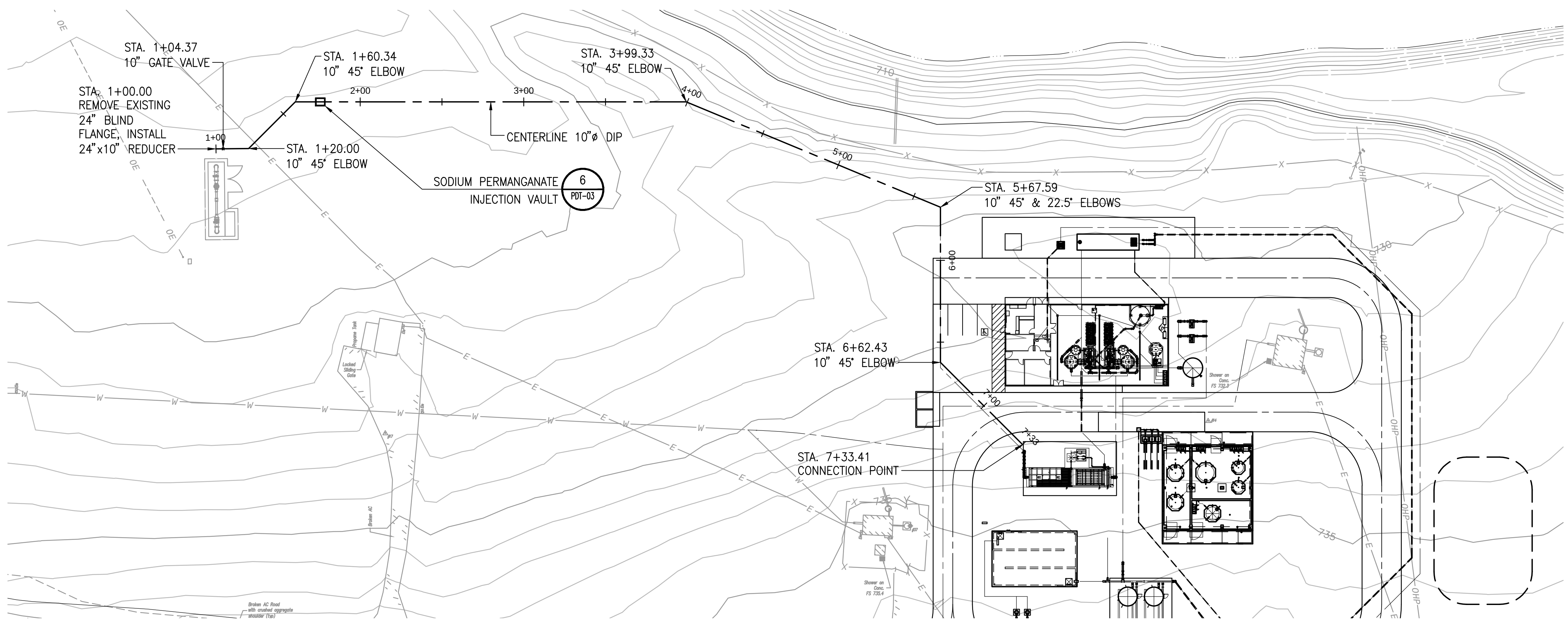

0 40' 80'

1" = 40'

PRELIMINARY
30% SUBMITTAL

0 1/2 1

IF THIS BAR DOES NOT MEASURE 1" THEN DRAWING IS NOT TO FULL SCALE

REV	DATE	DESCRIPTION	APPR
1			
2			
3			
4			

PROJECT ENGINEER: JON HANLON
REG NUMBER
EXP DATE

AECOM
1194 PACIFIC STREET, SUITE 204
SAN LUIS OBISPO ,CA 93401
T 805.542.9840 F 805.542.9990
www.aecom.com

CITY OF EL PASO DE ROBLES INCORPORATED 1889

CITY OF EL PASO DE ROBLES
WATER TREATMENT PLANT PROJECT

RAW WATER
PLAN AND PROFILE

DESIGNED: JHN
DETAILED: JPF
CHECKED: -
APPROVED:
DATE: November 2012

AECOM PROJECT NO.
60264606

P.R. PROJECT NO.

CADD STDS.
AECOM

C00-08
SHEET
X OF -

H: 1" = 20'
V: 1" = 5'

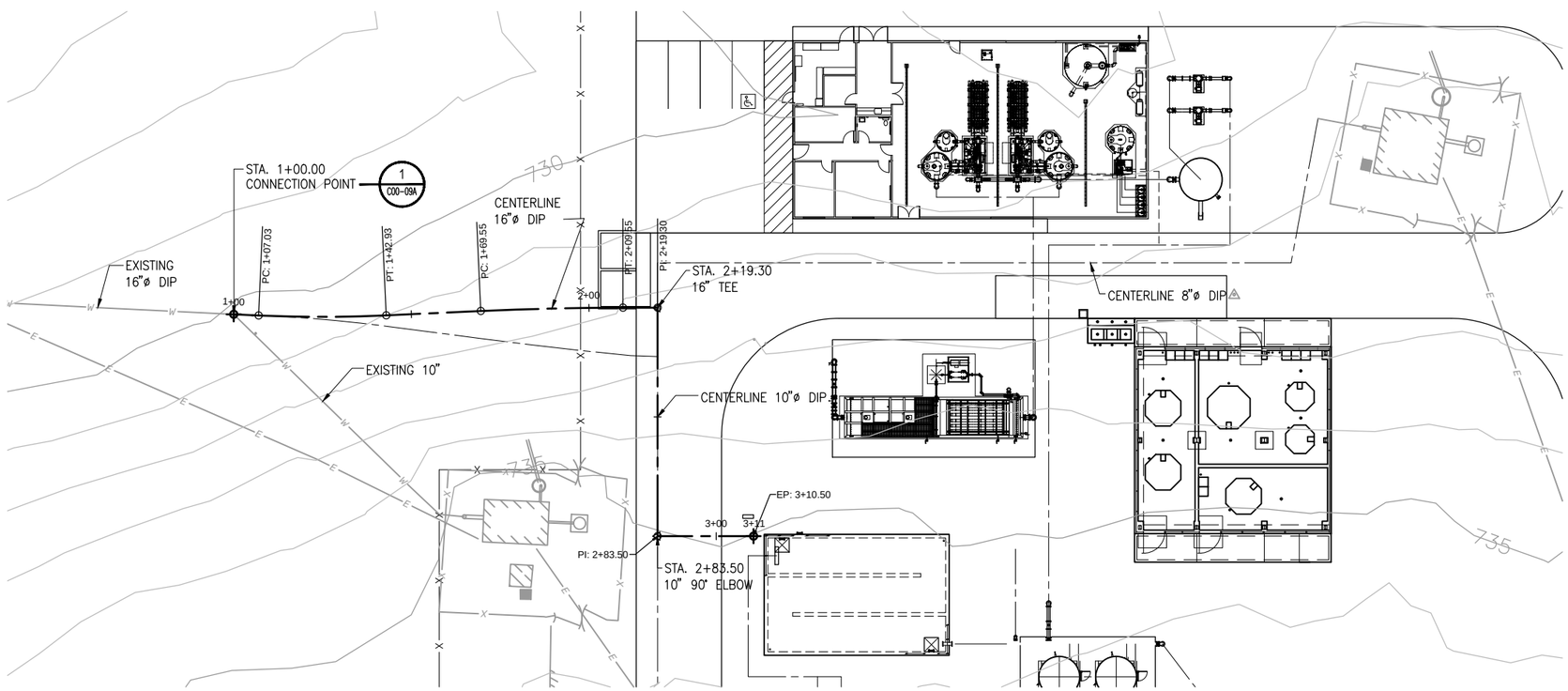

1" = 20'

PRELIMINARY
30% SUBMITTAL

IF THIS BAR DOES NOT MEASURE 1" THEN DRAWING IS NOT TO FULL SCALE

REV	DATE	DESCRIPTION	APPR
1			
2			
3			
4			

PROJECT ENGINEER: JOM HANLON
REG NUMBER
EXP DATE

AECOM
AECOM
1194 PACIFIC STREET, SUITE 204
SAN LUIS OBISPO, CA 93401
T 805.542.9840 F 805.542.9990
www.aecom.com

CITY OF EL PASO DE ROBLES
WATER TREATMENT PLANT PROJECT

FINISHED WATER
PLAN AND PROFILE

DESIGNED: JHN
DETAILED: JPF
CHECKED: -
APPROVED:
DATE: November 2012
AECOM PROJECT NO. 60264606
P.R. PROJECT NO.
CADD STDS. AECOM

C00-09
SHEET
X OF -

DWG: V:\PASO ROBLES\60264606-WTP\C00 CAD\PLANSET\2-CIVIL\C00-09.dwg Layout Name: Layout1 - Plotted by: Rodriguez, David Date: 11/28/2012 - 3:41 PM
XREFS: C-LP-PR - S-RP-06 - D-FP-CHEM-PIPING - S-NP-09 - A-FP-MEMB - C-Y-BOUNDARY-E - C-Y-FEATURES-E - C-Y-TOPO-EX - C-BD-PR IMAGES: CITY OF PASO LOGO_1.png -

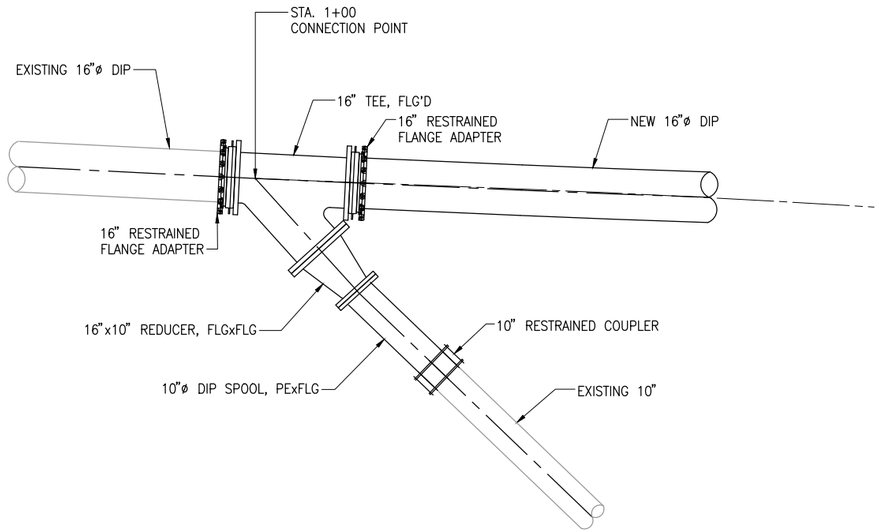

STA. 1+00 CONNECTION

1
-

SCALE: 1/2" = 1'-0"

PRELIMINARY
30% SUBMITTAL

0 1/2 1

IF THIS BAR DOES NOT MEASURE 1" THEN DRAWING IS NOT TO FULL SCALE

REV	DATE	DESCRIPTION	APPR

PROJECT ENGINEER JON HANLON
REG NUMBER
EXP DATE

AECOM
AECOM
1194 PACIFIC STREET, SUITE 204
SAN LUIS OBISPO, CA 93401
T 805.542.9840 F 805.542.9990
www.aecom.com

CITY OF EL PASO DE ROBLES
WATER TREATMENT PLANT PROJECT

FINISHED WATER DETAIL

DESIGNED: JHN
DETAILED: JPF
CHECKED: -
APPROVED:
DATE: November 2012
AECOM PROJECT NO. 60264606
P.R. PROJECT NO.
CADD STDS. AECOM

C00-09A
SHEET X OF -

DWG: V:\PASO ROBLES\60264606-WTP\000 CAD\PLANSET\2-CIVIL\C00-09A.dwg Layout Name: Layout1 - Plotted by: Rodriguez, David Date: 11/28/2012 - 3:41 PM
XREFS: C-LP-PR - S-RP-06 - D-FP-CHEM-PIPING - S-NP-09 - A-FP-MEMB - C-Y-BOUNDARY-E - C-Y-FEATURES-E - C-Y-TOPO-EX - G-BD-PR IMAGES: CITY OF PASO LOGO_1.png -

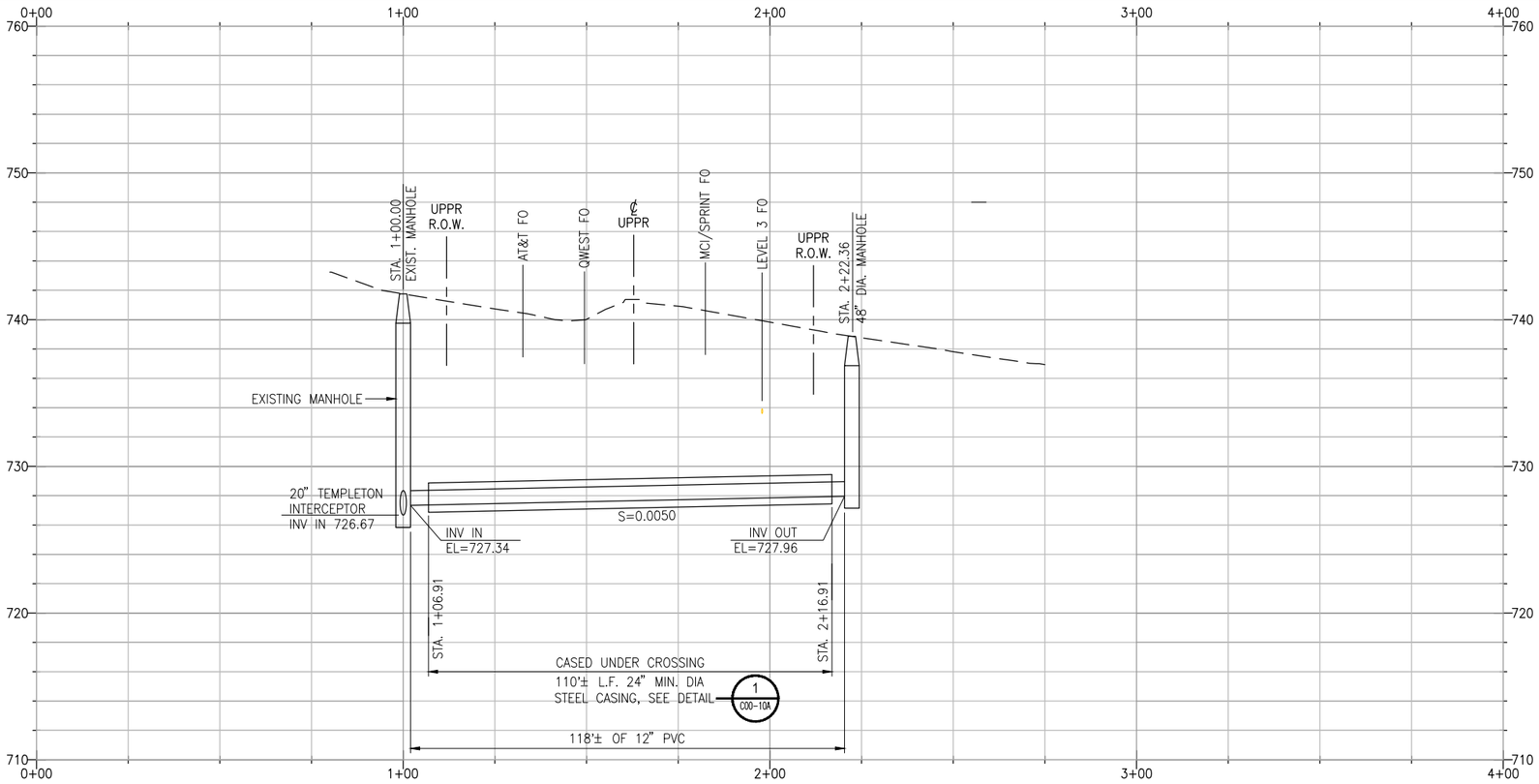

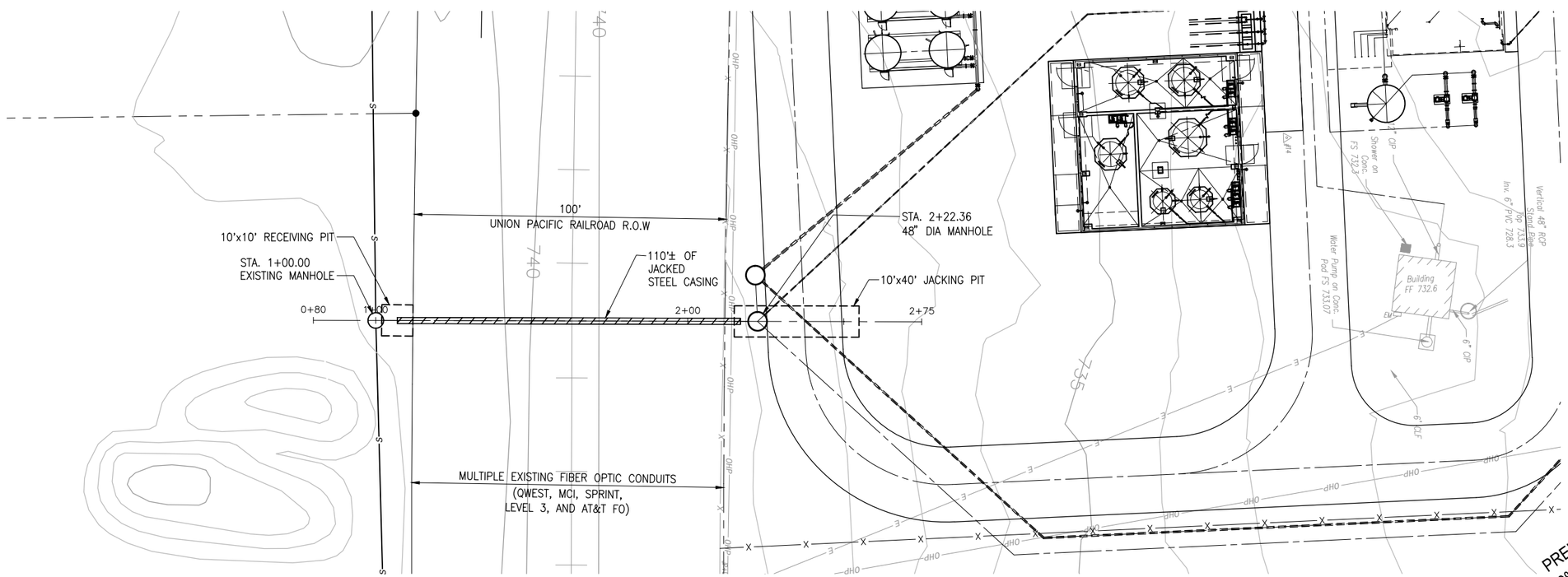

REV	DATE	DESCRIPTION	APPR

PROJECT ENGINEER
JOM HANLON
REG NUMBER
EXP DATE

AECOM
AECOM
1194 PACIFIC STREET, SUITE 204
SAN LUIS OBISPO, CA 93401
T 805.542.9840 F 805.542.9990
www.aecom.com

CITY OF EL PASO DE ROBLES
WATER TREATMENT PLANT PROJECT

U.P.R. CROSSING
PLAN AND PROFILE

DESIGNED: JHN
DETAILED: JPF
CHECKED: -
APPROVED:
DATE: November 2012
AECOM PROJECT NO.
60264606
P.R. PROJECT NO.
CADD STDS.
AECOM

C00-10
SHEET
X OF -

DWG: V:\PASO ROBLES\60264606-WTP\000 CAD\PLANSET\2-CIVIL\C00-10.dwg Layout Name: 34x22 - Plotted by: Rodriguez, David Date: 11/28/2012 - 3:42 PM
XREFS: G-BD-PR - C-Y-FEATURES - C-Y-FEATURES-E - C-Y-TOPO-EX - Aerial - C-W-UTILITY-E - C-Y-BOUNDARY-E - C-LP-PR - S-RP-06 - D-FP-CHEM-PIPING - S-NP-09 IMAGES: CITY OF PASO LOGO_1.png -

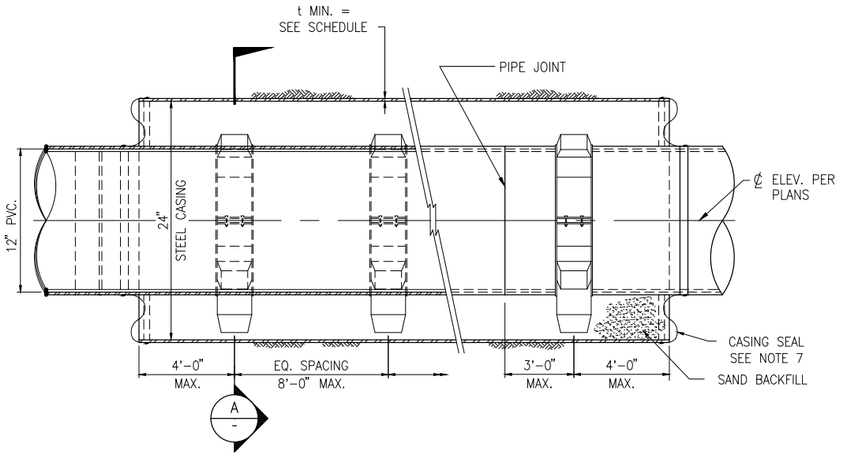

JACKED CASING DETAIL

NOT TO SCALE

1 / - C00-10

NOTES:

1. FOR LOCATIONS OF PIPE IN JACKED STEEL CASING SEE PLANS.
2. JACKED STEEL CASINGS SHALL BE IN CONFORMANCE WITH SPECIFICATION SECTION 317216 AND SHALL FOLLOW ADDITIONAL REQ'MTS. AND RECOMMENDATIONS IN GEOTECH REPORT PER THE APPLICABLE ENCROACHMENT PERMIT.
3. USE BENTONITE AS REQ'D TO REDUCE JACKING FORCE.
4. ALL CASING SECTIONS SHALL BE JOINED BY CONTINUOUS WELDING PROCESS.
5. FOR NUMBER AND SPACING OF CASING RUNNERS, SEE SPEC. SECTION 317216.
6. BACKFILL ANNULAR SPACE BETWEEN CASING AND CARRIER PIPE WITH SAND. SEE SPECIFICATIONS SECTION 312316 AND 317216.
7. EACH END OF A CASING SHALL BE FITTED WITH AN END SEAL, INSTALLED AS SHOWN AND SECURELY FASTENED WITH S.S. CLAMPS. THE END SEAL SHALL BE A MIN. 1/8" THICK NEOPRENE.

SCHEDULE – STEEL CASING FOR PIPE

LOCATION	BEGINNING STA.	ENDING STA.	MIN. CASING SIZE	MIN. WALL THICKNESS	TYPE CARRIER PIPE
UPRR CROSSING	STA. 1+06.91	STA. 2+16.91	24"	1/2"	12" PVC

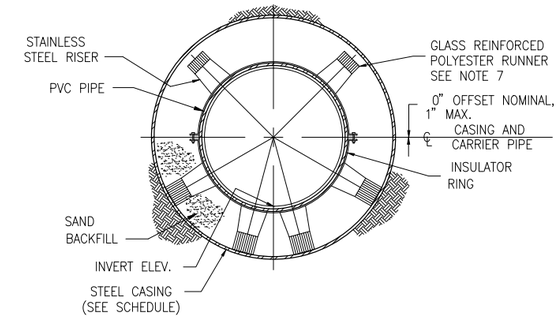

CASING SECTION

CASING SECTION

A / -

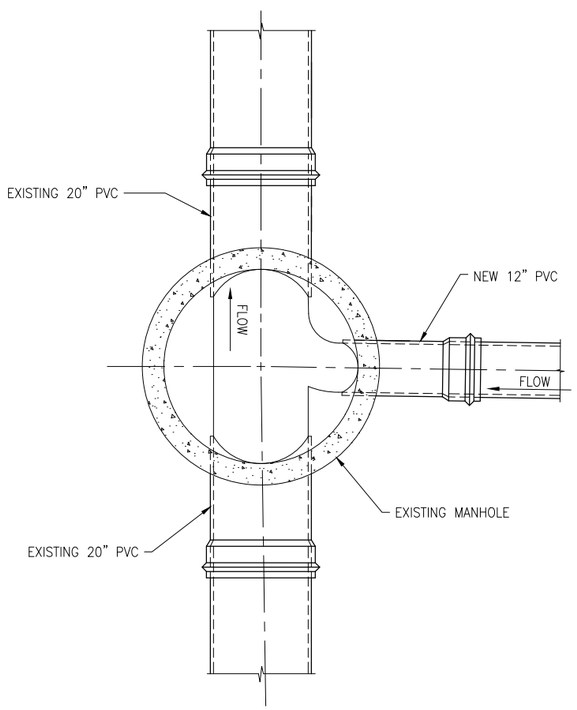

PLAN VIEW

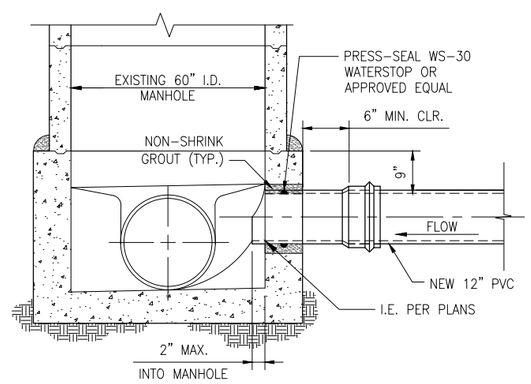

SECTION VIEW

CONNECTION AT STA. 1+00.00

NOT TO SCALE

2 / - C00-10

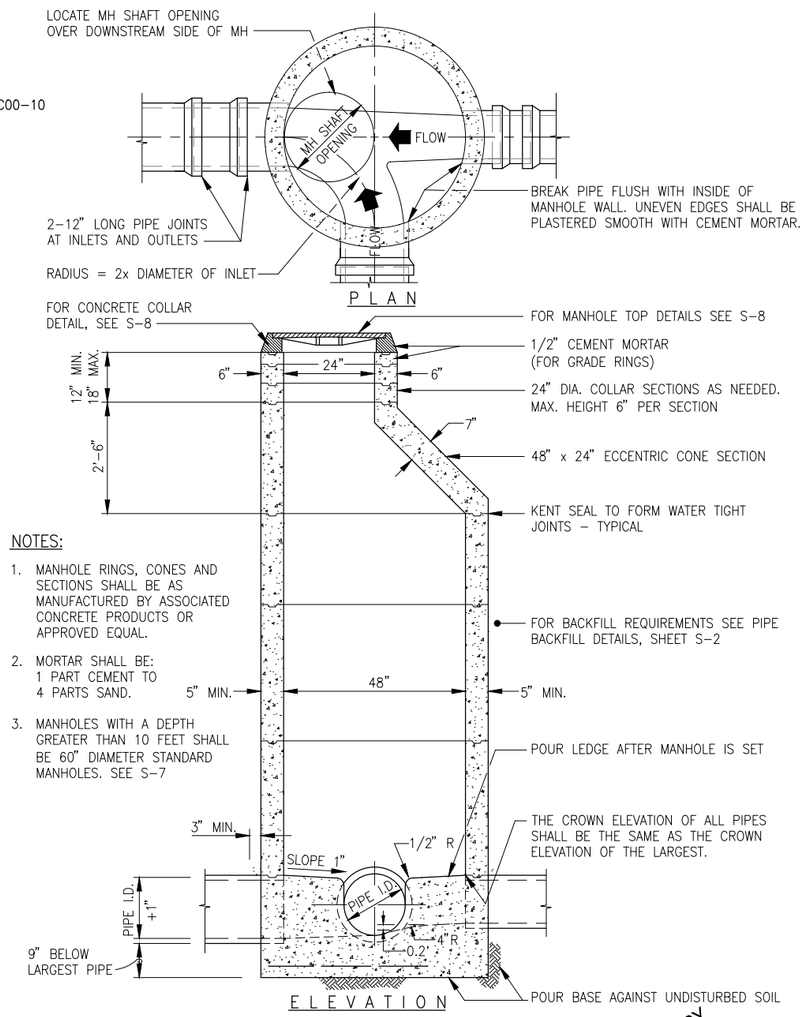

NOTES:

1. MANHOLE RINGS, CONES AND SECTIONS SHALL BE AS MANUFACTURED BY ASSOCIATED CONCRETE PRODUCTS OR APPROVED EQUAL.
2. MORTAR SHALL BE: 1 PART CEMENT TO 4 PARTS SAND.
3. MANHOLES WITH A DEPTH GREATER THAN 10 FEET SHALL BE 60" DIAMETER STANDARD MANHOLES. SEE S-7

48" SEWER MANHOLE

NOT TO SCALE

3 / - C00-10

PRELIMINARY 30% SUBMITTAL

0 1/2 1
IF THIS BAR DOES NOT MEASURE 1" THEN DRAWING IS NOT TO FULL SCALE

REV	DATE	DESCRIPTION	APPR

PROJECT ENGINEER: JON HANLON
REG NUMBER
EXP DATE

AECOM
AECOM
1194 PACIFIC STREET, SUITE 204
SAN LUIS OBISPO, CA 93401
T 805.542.9840 F 805.542.9990
www.aecom.com

CITY OF EL PASO DE ROBLES
WATER TREATMENT PLANT PROJECT

SEWER DETAILS

DESIGNED: JHN
DETAILED: JPF
CHECKED: -
APPROVED:
DATE: November 2012
AECOM PROJECT NO. 60264606
P.R. PROJECT NO.
CADD STDS. AECOM

C00-10A
SHEET X OF -

DWG: V:\PASO ROBLES\60264606-WTP\000 CAD\PLANSET\2-CIVIL\C00-10A.dwg Layout Name: 22x34 - Plotted by: Rodriguez, David Date: 11/28/2012 - 3:42 PM
XREFS: G-BD-PR IMAGES: CITY OF PASO LOGO_1.png -

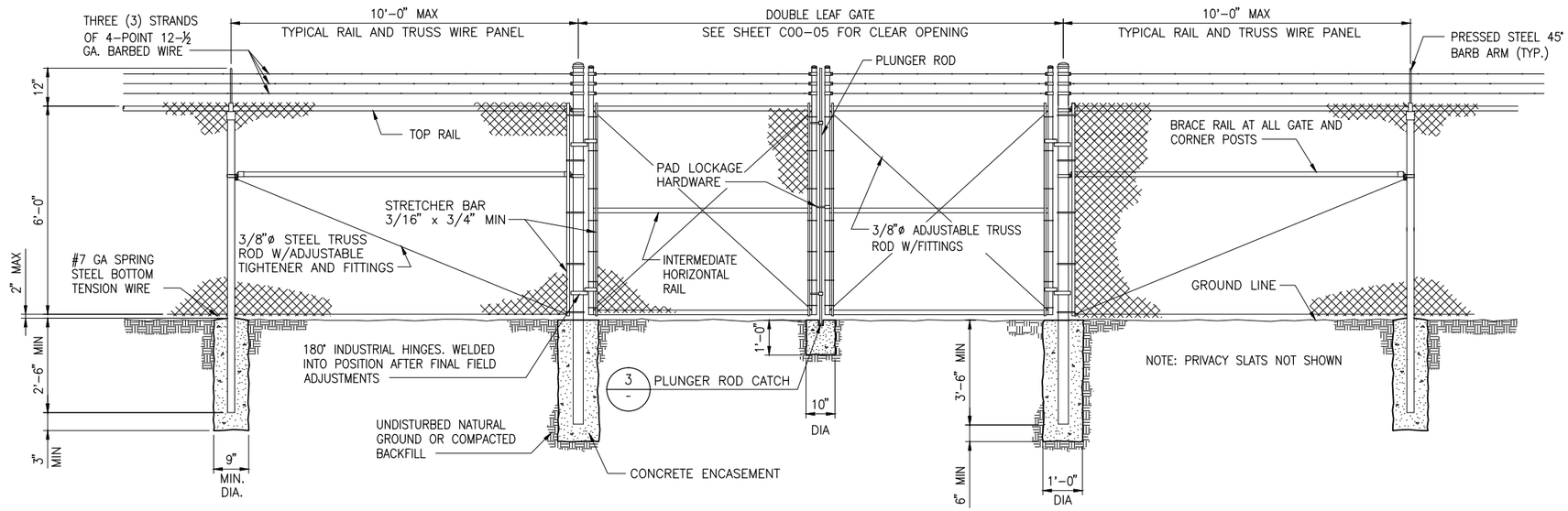

DOUBLE LEAF GATE DETAIL

NOT TO SCALE

1 / -

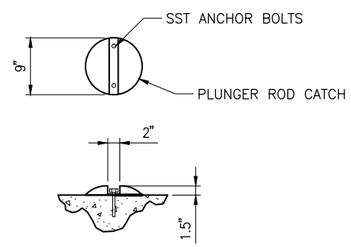

PLUNGER ROD CATCH

SCALE: NTS

3 / -

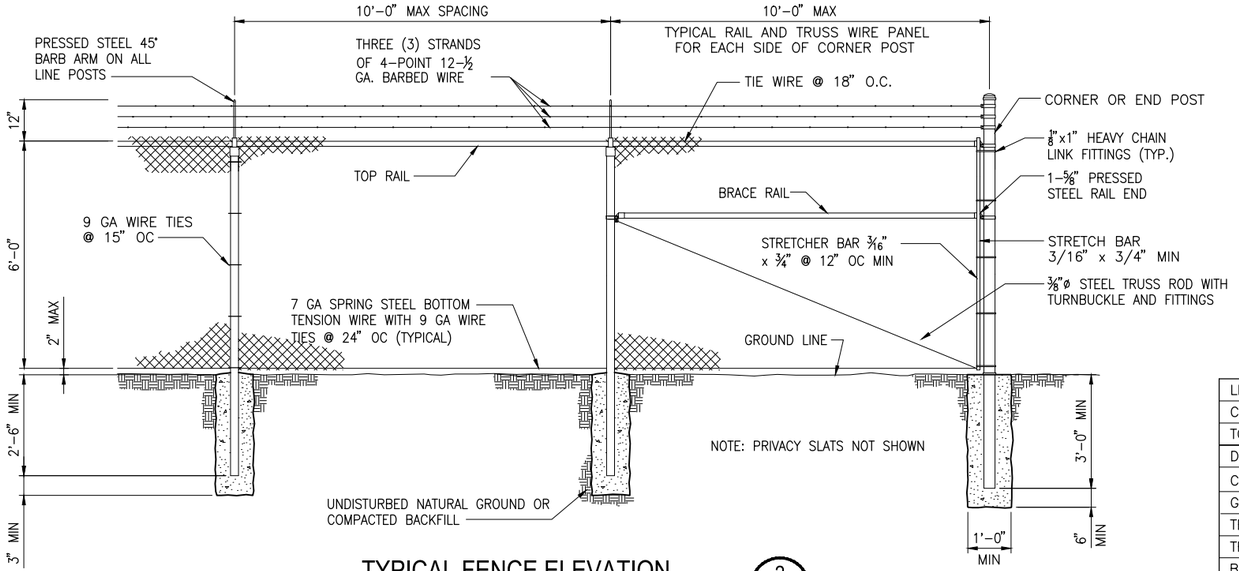

TYPICAL FENCE ELEVATION

SCALE: NTS

2 / -

POST & MATERIALS TABLE

LINE POSTS	2-3/8" OD SCH 40 PIPE
CORNER & END POSTS	2-7/8" OD SCH 40 PIPE
TOP RAIL	1-5/8" OD SCH 40 PIPE
DRIVE GATE POSTS	6-5/8" OD SCH 40 PIPE
CHAIN LINK FABRIC	9 GA WIRE 2" DIAMOND WIRE, KNUCKLED TOP & BOTTOM, WITH GREEN PRIVACY SLATS
GATE FRAMES	1-7/8" OD SCH 40 PIPE
TENSION WIRE	7 GA GALV COIL SPRING STEEL
TRUSS RODS	3/8" GALV STEEL
BRACE RAIL	1-5/8" OD SCH 40 PIPE

PRELIMINARY 30% SUBMITTAL

0 1/2 1

IF THIS BAR DOES NOT MEASURE 1" THEN DRAWING IS NOT TO FULL SCALE

REV	DATE	DESCRIPTION	APPR
1			
2			
3			
4			

PROJECT ENGINEER | REG NUMBER | EXP DATE

AECOM
AECOM
1194 PACIFIC STREET, SUITE 204
SAN LUIS OBISPO, CA 93401
T 805.542.9840 F 805.542.9990
www.aecom.com

CITY OF EL PASO DE ROBLES
WATER TREATMENT PLANT PROJECT

CHAIN LINK FENCE DETAILS

DESIGNED: JJR
DETAILED: JPF
CHECKED:
APPROVED:
DATE: November 2012
AECOM PROJECT NO. 60264606
P.R. PROJECT NO.
CADD STDS. AECOM

C00-11
SHEET
. OF -

DWG: V:\PASO ROBLES\60264606-WTP\000 CAD\PLANSET\2-CIVIL\C00-11.dwg Layout Name: C00-11 - Plotted by: Rodriguez, David Date: 11/28/2012 - 3:42 PM
XREFS: G-BD-PR IMAGES: CITY OF PASO LOGO_1.png -

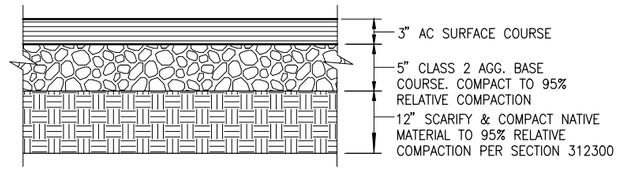

ASPHALT PAVEMENT SECTION (1 / -)

NOT TO SCALE

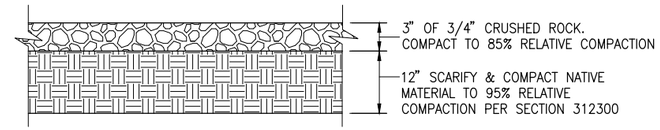

CRUSHED ROCK SURFACING SECTION (2 / -)

NOT TO SCALE

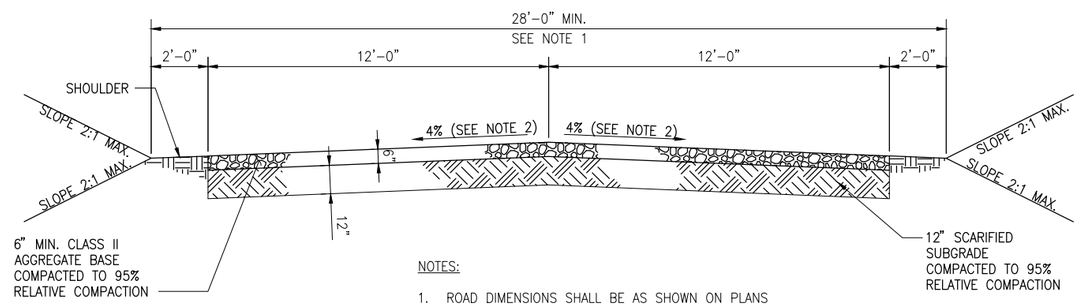

NOTES:

1. ROAD DIMENSIONS SHALL BE AS SHOWN ON PLANS
2. ALL GRADING TO FOLLOW ELEVATIONS SET BY CONTOURS SHOWN ON PLANS. ROAD SHALL BE CROWNED AS INDICATED UNLESS OTHERWISE NOTED ON PLANS.

TYPICAL GRAVEL ROAD CROSS SECTION (3 / -)

NOT TO SCALE

PRELIMINARY
30% SUBMITTAL

0 1/2 1
IF THIS BAR DOES NOT MEASURE 1" THEN DRAWING IS NOT TO FULL SCALE

REV	DATE	DESCRIPTION	APPR

PROJECT ENGINEER | REG NUMBER | EXP DATE

AECOM
AECOM
1194 PACIFIC STREET, SUITE 204
SAN LUIS OBISPO, CA 93401
T 805.542.9840 F 805.542.9990
www.aecom.com

CITY OF EL PASO DE ROBLES
WATER TREATMENT PLANT PROJECT

ROAD AND PAVING SECTIONS

DESIGNED: JJR
DETAILED: JPF
CHECKED:
APPROVED:
DATE: November 2012
AECOM PROJECT NO. 60264606
P.R. PROJECT NO.
CADD STDS. AECOM

C00-12
SHEET . OF -

DWG: V:\PASO ROBLES\60264606-WTP\000 CAD\PLANSET\2-CIVIL\C00-12.dwg Layout Name: 34x22 - Plotted by: Rodriguez, David Date: 11/28/2012 - 3:42 PM
XREFS: G-BD-PR IMAGES: CITY OF PASO LOGO_1.png -

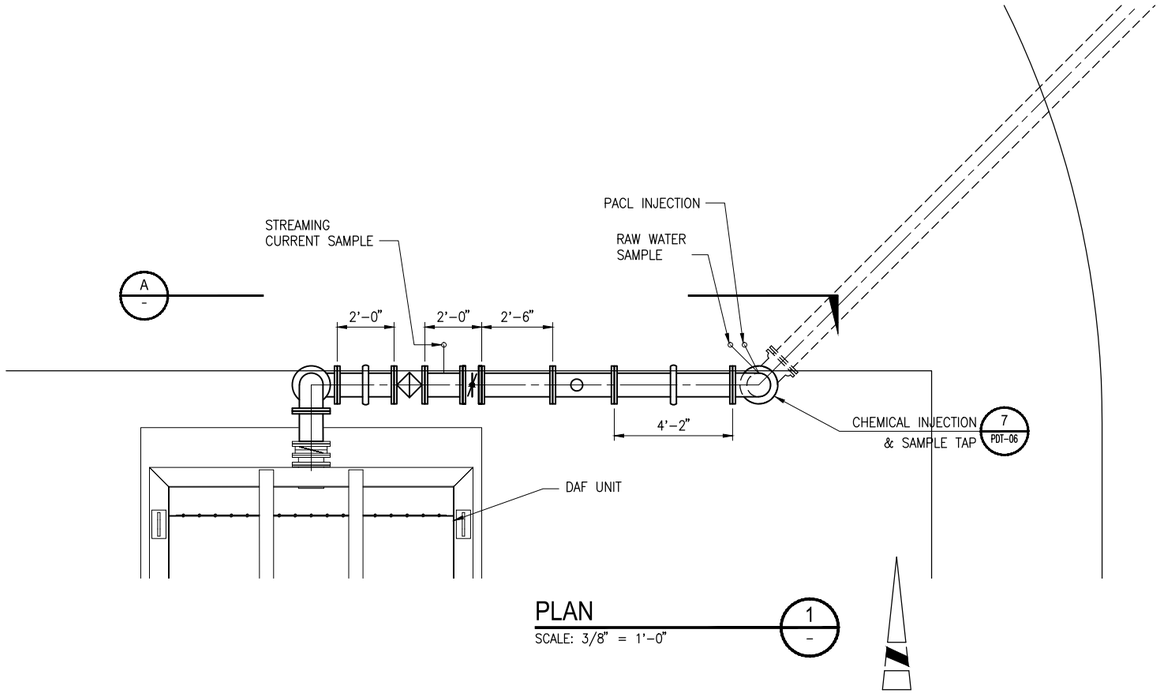

PLAN

SCALE: 3/8" = 1'-0"

1
-

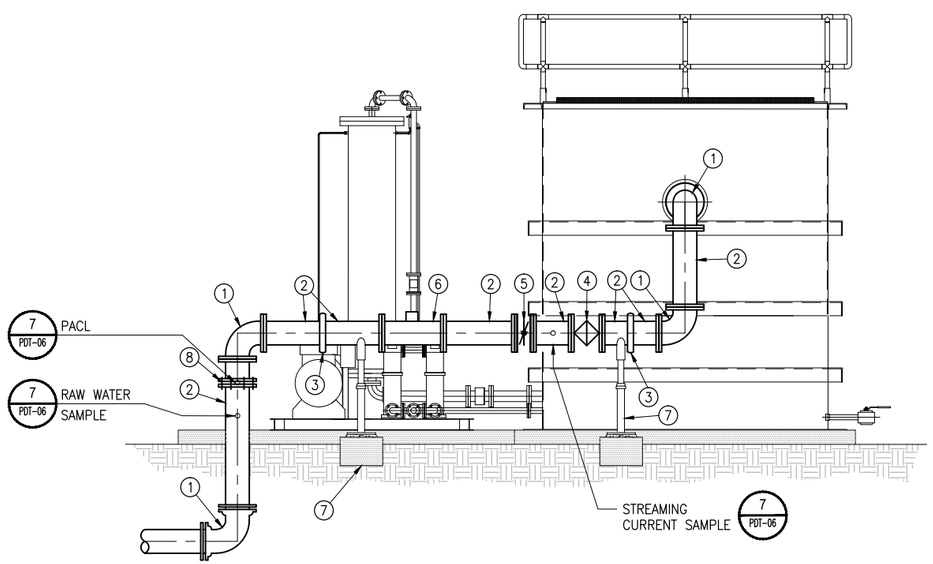

SECTION

SCALE: 3/8" = 1'-0"

A
-

MATERIALS LIST

1. 10" 90° ELBOW
2. 10" SPOOL PIECE
3. 10" GROOVED END COUPLING
4. 10" MOTORIZED , ECCENTRIC PLUG VALVE, TYPE 510
5. 10" BUTTERFLY VALVE, TYPE 200
6. 10" McCROMETER, MODEL ML-04, OR EQUAL
7. PIPE SUPPORT (1 / PDT-04)
8. STATIC MIXER

PRELIMINARY
30% SUBMITTAL

0 1/2 1

IF THIS BAR DOES NOT MEASURE 1" THEN DRAWING IS NOT TO FULL SCALE

REV	DATE	DESCRIPTION	APPR
1			
2			
3			
4			

PROJECT ENGINEER | REG NUMBER | EXP DATE

AECOM
AECOM
1194 PACIFIC STREET, SUITE 204
SAN LUIS OBISPO, CA 93401
T 805.542.9840 F 805.542.9990
www.aecom.com

CITY OF EL PASO DE ROBLES
WATER TREATMENT PLANT PROJECT

METERING & FLOW CONTROL DETAILS

DESIGNED:
DETAILED:
CHECKED:
APPROVED:
DATE: November 2012
AECOM PROJECT NO. 60264606
P.R. PROJECT NO.
CADD STDS. AECOM

P01-01
SHEET
- OF -

DWG: V:\PASO ROBLES\60264606-WTP\000 CAD\PLANSET\3-PROCESS\P01-01.dwg Layout Name: Layout1 - Plotted by: Rodriguez, David Date: 11/28/2012 - 3:46 PM
XREFS: G-BD-PR - C-LP-PR - S-RP-06 - D-FP-CHEM-PIPING - S-NP-09 IMAGES: CITY OF PASO LOGO_1.png -

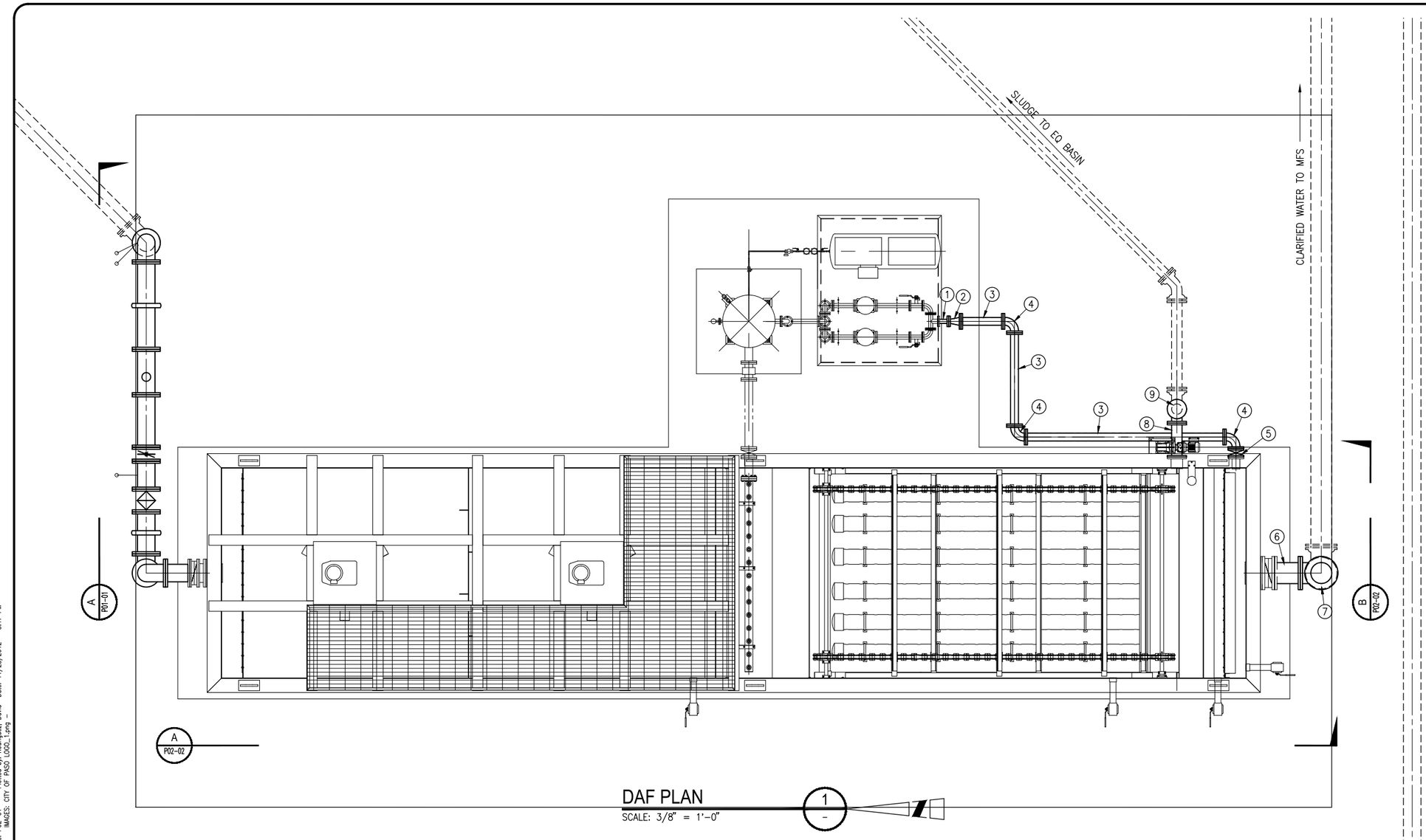

MATERIALS LIST

1. 2" SPOOL PIECE
2. 4"x 2" REDUCER
3. 4" SPOOL PIECE
4. 4" 90° ELBOW
5. 4" BUTTERFLY VALVE, TYPE 200
6. 12" SPOOL PIECE
7. 12 TEE W/BLIND FLANGE
8. 6" SPOOL PIECE
9. 6" TEE W/BLIND FLANGE

DAF PLAN

SCALE: 3/8" = 1'-0"

1
-

REV	DATE	DESCRIPTION	APPR
4			
3			
2			
1			

PROJECT ENGINEER | REG NUMBER | EXP DATE

AECOM

AECOM
1194 PACIFIC STREET, SUITE 204
SAN LUIS OBISPO, CA 93401
T 805.542.9840 F 805.542.9990
www.aecom.com

CITY OF EL PASO DE ROBLES
INCORPORATED 1889

CITY OF EL PASO DE ROBLES
WATER TREATMENT PLANT PROJECT

DAF PLAN

DESIGNED:
DETAILED:
CHECKED:
APPROVED:
DATE: November 2012
AECOM PROJECT NO. 60264606
P.R. PROJECT NO.
CADD STDS. AECOM

P02-01
SHEET
- OF -

PRELIMINARY
30% SUBMITTAL

0 1/2 1
IF THIS BAR DOES NOT MEASURE 1" THEN DRAWING IS NOT TO FULL SCALE

DWG: V:\PASO ROBLES\60264606-WTP\000 CAD\PLANSET\3-PROCESS\P02-01.dwg Layout Name: P02-01 - Plotted by: Rodriguez, David Date: 11/28/2012 - 3:47 PM
XREFS: G-BD-PR - C-LP-PR - S-RP-06 - D-FP-CHEM-PIPING - S-NP-09 - A-FP-MEMB IMAGES: CITY OF PASO LOGO_1.png -

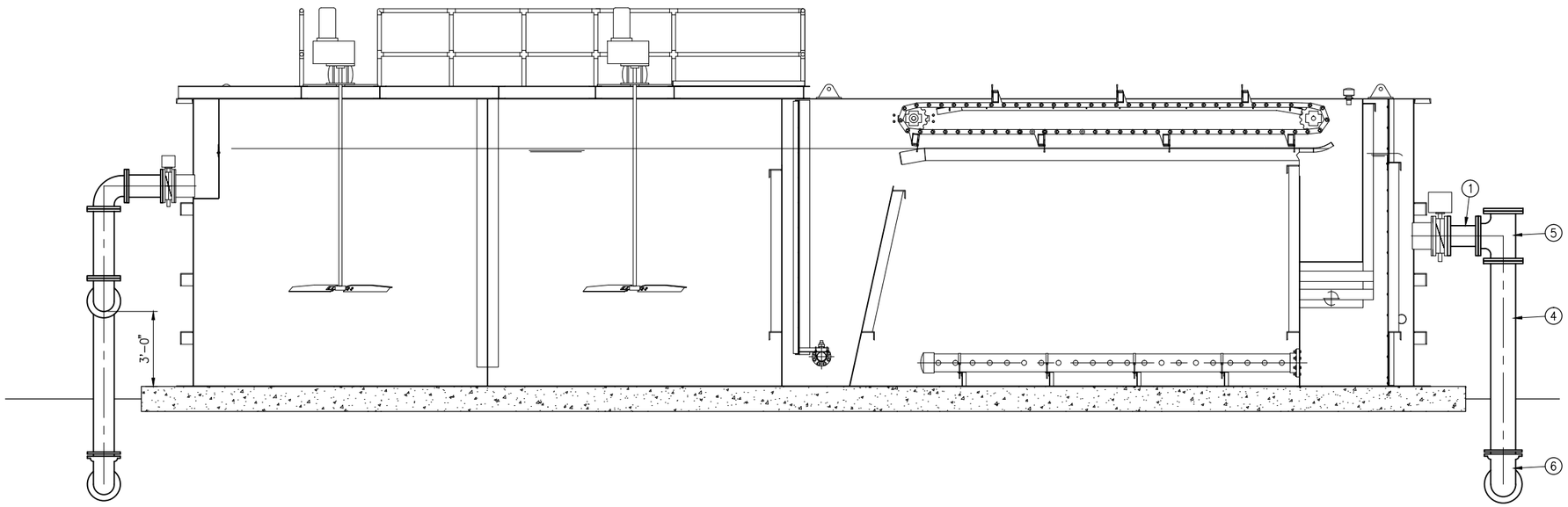

SECTION A
SCALE: 3/8" = 1'-0"

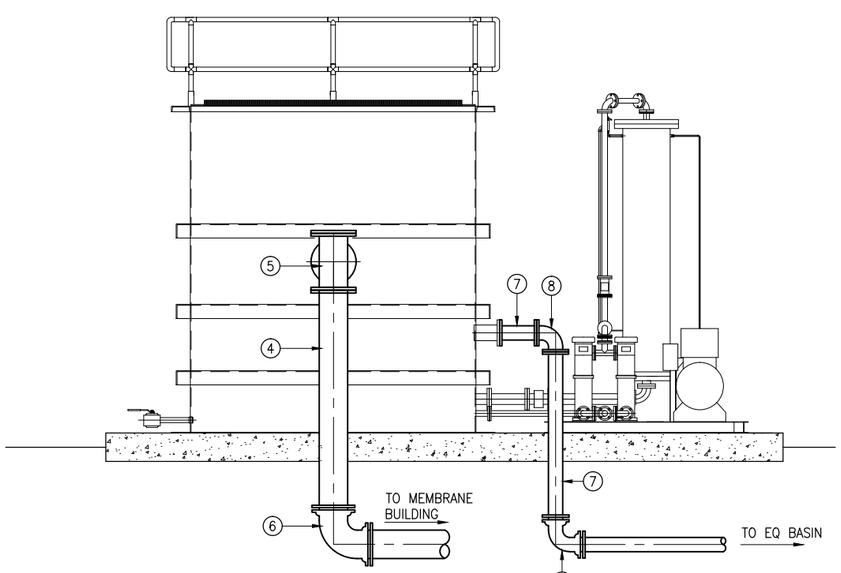

SECTION B
SCALE: 3/8" = 1'-0"

MATERIALS LIST

1. 10" SPOOL PIECE
2. 10" TEE
3. 10" 90° ELBOW
4. 12" SPOOL PIECE
5. 12" TEE
6. 12" 90° ELBOW
7. 6" SPOOL PIECE
8. 6" 90° ELBOW

PRELIMINARY 30% SUBMITTAL

0 1/2 1
IF THIS BAR DOES NOT MEASURE 1" THEN DRAWING IS NOT TO FULL SCALE

REV	DATE	DESCRIPTION	APPR

PROJECT ENGINEER | REG NUMBER | EXP DATE

AECOM
AECOM
1194 PACIFIC STREET, SUITE 204
SAN LUIS OBISPO, CA 93401
T 805.542.9840 F 805.542.9990
www.aecom.com

CITY OF EL PASO DE ROBLES
WATER TREATMENT PLANT PROJECT

DAF SECTIONS & DETAILS

DESIGNED:
DETAILED:
CHECKED:
APPROVED:
DATE: November 2012
AECOM PROJECT NO. 60264606
P.R. PROJECT NO.
CADD STDS. AECOM

P02-02
SHEET
- OF -

DWG: V:\PASO ROBLES\60264606-WTP\000 CAD\PLANSET\3-PROCESS\P02-02.dwg Layout Name: Layout1 - Plotted by: Rodriguez, David Date: 11/28/2012 - 3:47 PM
XREFS: G-BD-PR IMAGES: CITY OF PASO LOGO_1.png -

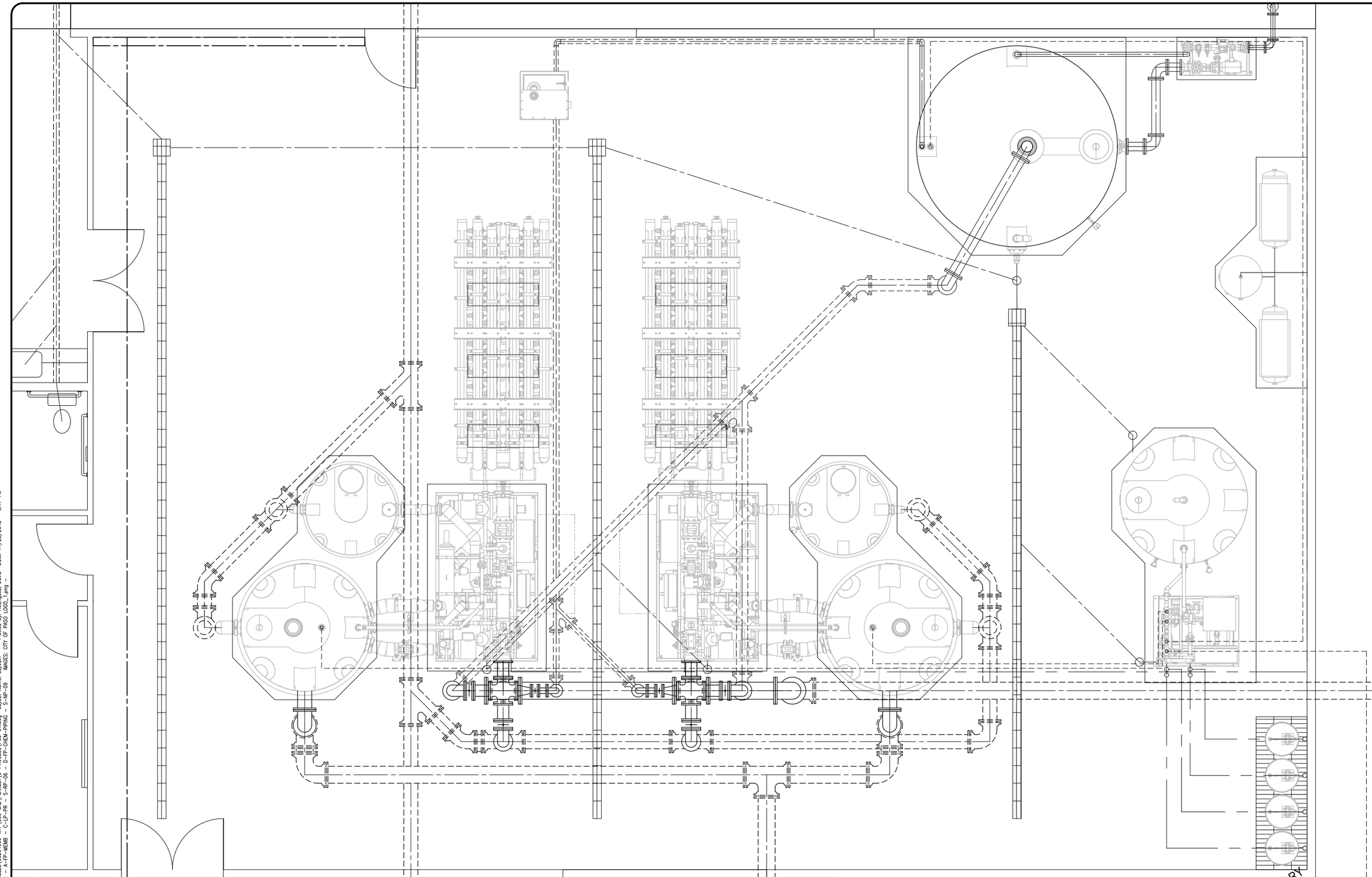

MEMBRANE PLAN

SCALE: 3/8" = 1'-0"

1
-

PRELIMINARY
30% SUBMITTAL

0 1/2 1
IF THIS BAR DOES NOT MEASURE 1" THEN DRAWING IS NOT TO FULL SCALE

REV	DATE	DESCRIPTION	APPR

PROJECT ENGINEER | REG NUMBER | EXP DATE

AECOM
AECOM
1194 PACIFIC STREET, SUITE 204
SAN LUIS OBISPO, CA 93401
T 805.542.9840 F 805.542.9990
www.aecom.com

CITY OF EL PASO DE ROBLES
WATER TREATMENT PLANT PROJECT

MEMBRANE PLAN

DESIGNED:
DETAILED:
CHECKED:
APPROVED:
DATE: November 2012

AECOM PROJECT NO.
60264606

P.R. PROJECT NO.

CADD STDS.
AECOM

P03-01
SHEET
- OF -

DWG: V:\PASO ROBLES\60264606-WTP\000 CAD\PLANSET\3-PROCESS\P03-01.dwg Layout Name: Layout1 - Plotted by: Rodriguez, David Date: 11/28/2012 - 3:47 PM
XREFS: G-BD-PR - A-FP-MEMB - C-LP-PR - S-RP-06 - D-FP-CHEM-PIPING - S-NP-09 IMAGES: CITY OF PASO LOGO_1.png -

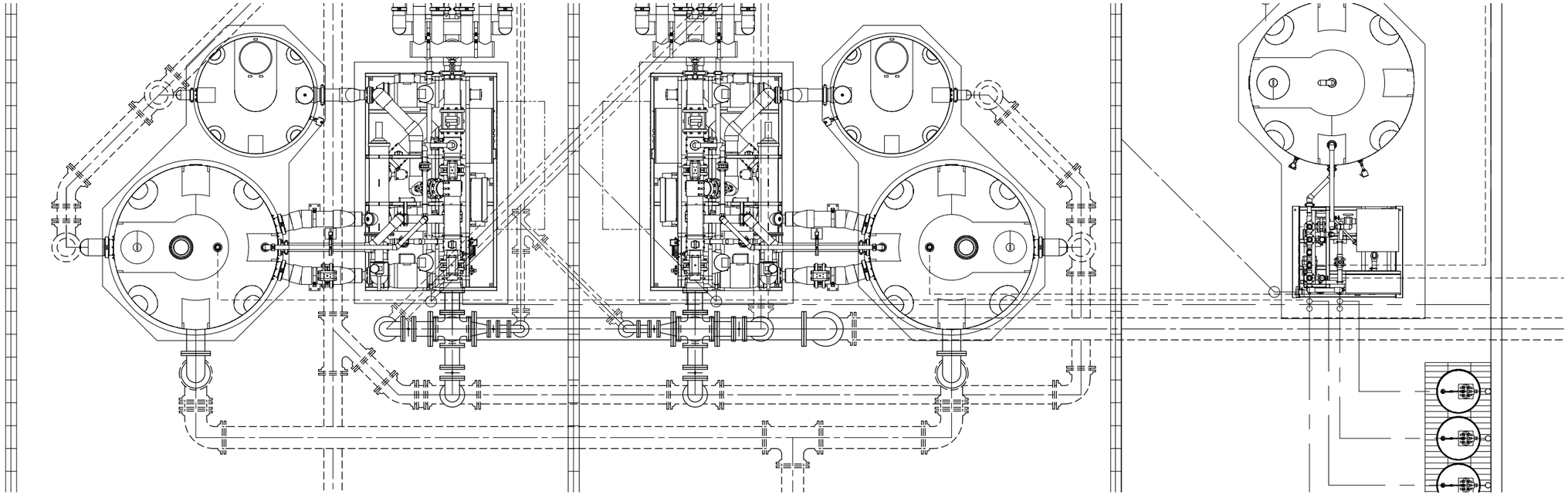

PLAN 1
SCALE: 3/8" = 1'-0"

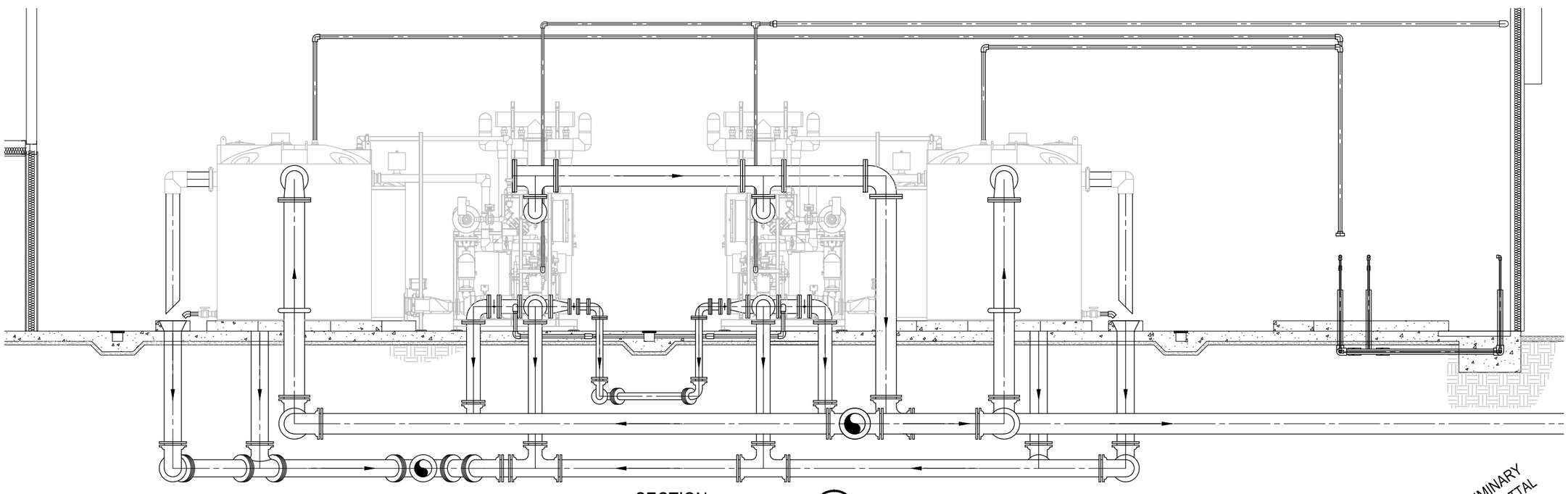

SECTION A
SCALE: 3/8" = 1'-0"

PRELIMINARY
30% SUBMITTAL

0 1/2 1
IF THIS BAR DOES NOT MEASURE 1" THEN DRAWING IS NOT TO FULL SCALE

REV	DATE	DESCRIPTION	APPR

PROJECT ENGINEER | REG NUMBER | EXP DATE

AECOM
AECOM
1194 PACIFIC STREET, SUITE 204
SAN LUIS OBISPO, CA 93401
T 805.542.9840 F 805.542.9990
www.aecom.com

CITY OF EL PASO DE ROBLES
WATER TREATMENT PLANT PROJECT

MEMBRANE SECTIONS

DESIGNED:
DETAILED:
CHECKED:
APPROVED:
DATE: November 2012
AECOM PROJECT NO. 60264606
P.R. PROJECT NO.
CADD STDS. AECOM

P03-02
SHEET
- OF -

DWG: V:\PASO ROBLES\60264606-WTP\000 CAD\PLANSET\3-PROCESS\P03-02.dwg Layout Name: Layout1 – Plotted by: Rodriguez, David Date: 11/28/2012 – 3:48 PM
XREFS: G-BD-PR – A-FP-MEMB – C-LP-PR – D-FP-CHEM-PIPING – S-NP-09 – S-NP-06 IMAGES: CITY OF PASO LOGO_1.png –

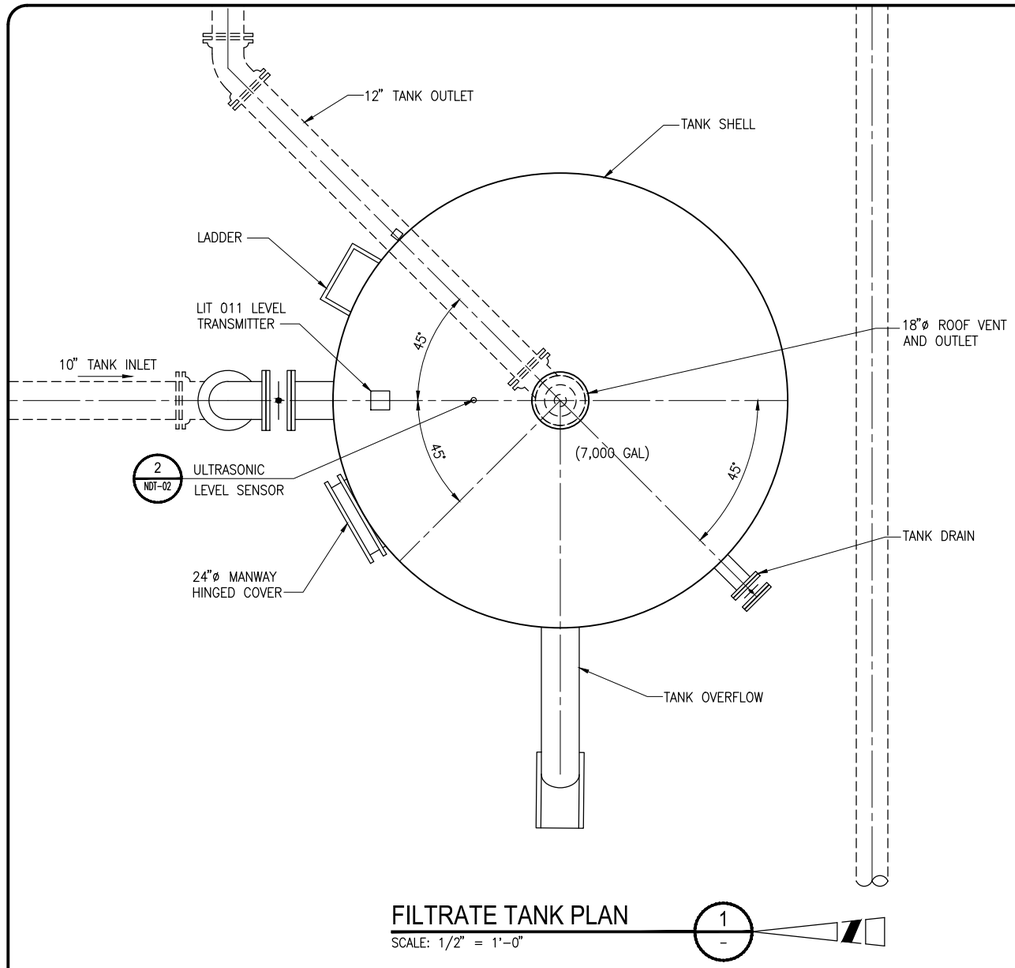

FILTRATE TANK PLAN (1 / -)

SCALE: 1/2" = 1'-0"

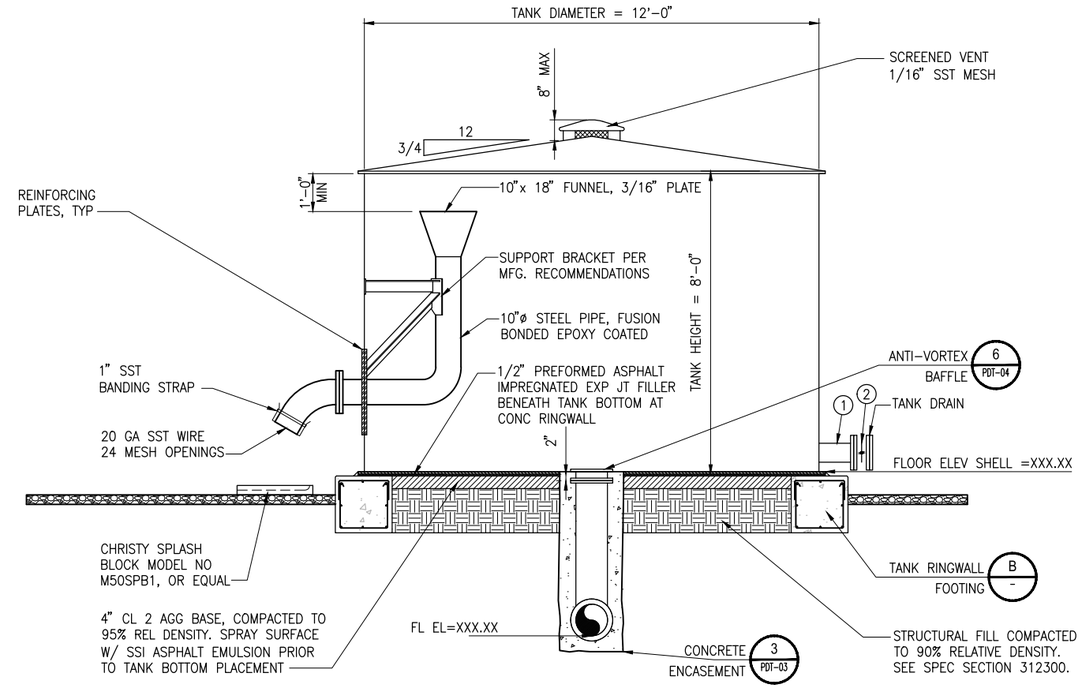

FILTRATE TANK ELEVATION (2 / -)

SCALE: 1/2" = 1'-0"

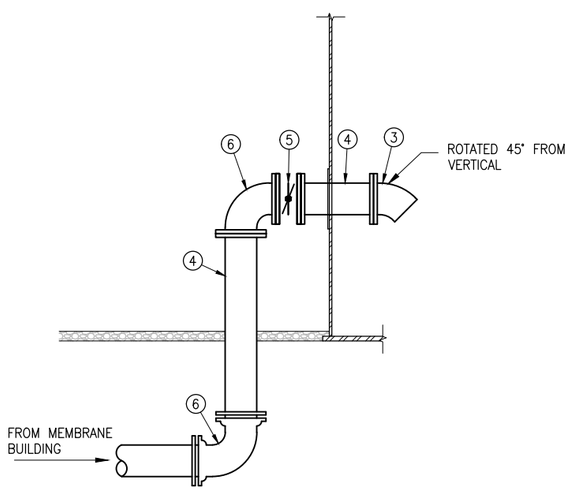

INLET DETAIL (3 / -)

SCALE: 3/8" = 1'-0"

MATERIALS LIST

1. 6" SPOOL PIECE
2. 6" BUTTERFLY VALVE, TYPE 200
3. 10" 45° ELBOW
4. 10" SPOOL PIECE
5. 10" BUTTERFLY VALVE, TYPE 200
6. 10" 90° ELBOW

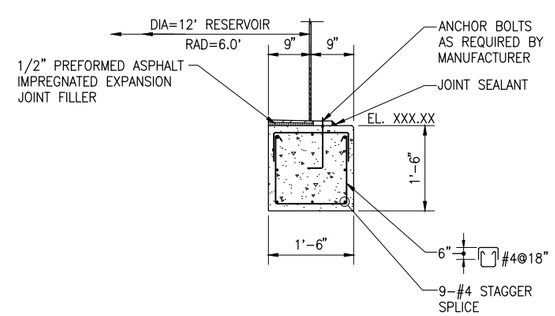

TANK RINGWALL (4 / -)

SCALE: 1/2" = 1'-0"

PRELIMINARY 30% SUBMITTAL

0 1/2 1

IF THIS BAR DOES NOT MEASURE 1" THEN DRAWING IS NOT TO FULL SCALE

REV	DATE	DESCRIPTION	APPR

PROJECT ENGINEER | REG NUMBER | EXP DATE

AECOM
AECOM
1194 PACIFIC STREET, SUITE 204
SAN LUIS OBISPO, CA 93401
T 805.542.9840 F 805.542.9990
www.aecom.com

CITY OF EL PASO DE ROBLES
WATER TREATMENT PLANT PROJECT

FILTRATE TANK PLAN

DESIGNED:
DETAILED:
CHECKED:
APPROVED:
DATE: November 2012
AECOM PROJECT NO. 60264606
P.R. PROJECT NO.
CADD STDS. AECOM

P04-01
SHEET - OF -

DWG: V:\PASO ROBLES\60264606-WTP\000 CAD\PLANSET\3-PROCESS\P04-01.dwg Layout Name: 22x34 - Plotted by: Rodriguez, David Date: 11/28/2012 - 3:48 PM
XREFS: G-BD-PR - C-LP-PR - A-FP-MEMB - S-RP-06 - D-FP-CHEM-PIPING - S-NP-09 IMAGES: CITY OF PASO LOGO_1.png -

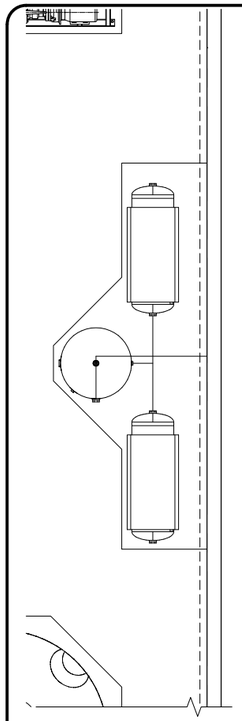

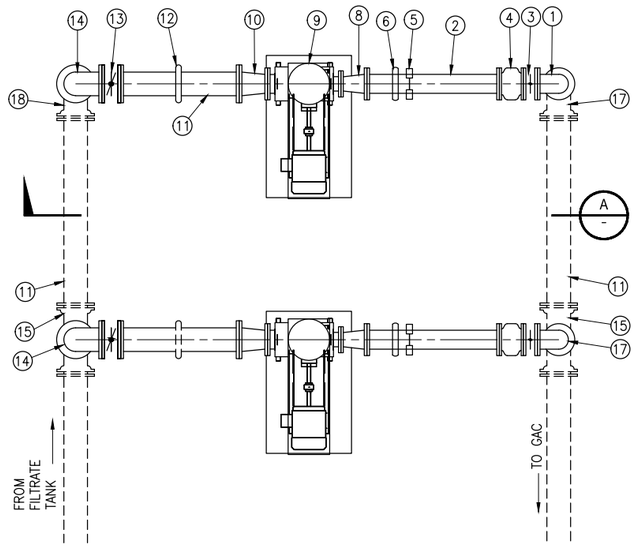

PLAN

SCALE: 3/8" = 1'-0"

1 -

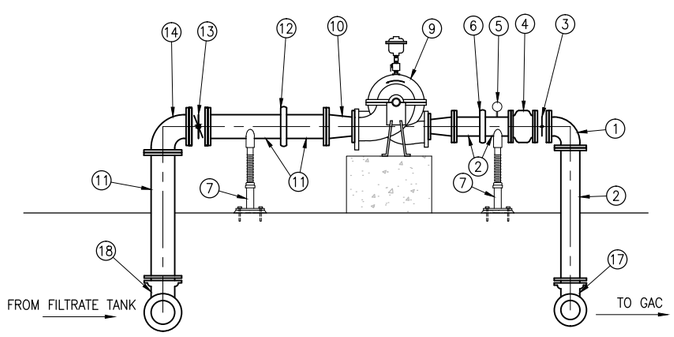

SECTION

SCALE: 3/8" = 1'-0"

A -

MATERIALS LIST

1. 8" 90° ELBOW
2. 8" SPOOL PIECE
3. 8" BUTTERFLY VALVE, TYPE 200
4. 8" CHECK VALVE, TYPE 790
5. TYPE 3 PRESSURE GAUGE/PRESSURE SWITCH (5 / PDT-06)
6. 8" GROOVED END COUPLING
7. PIPE SUPPORT (1 / PDT-04)
8. 8" x 6 "ECCENTRIC REDUCER
9. SPLIT CASE PUMP, SEE SECTION 432111
10. 10" x 8 "ECCENTRIC REDUCER
11. 10" SPOOL PIECE
12. 10" GROOVED END COUPLING
13. 10" BUTTERFLY VALVE, TYPE 200
14. 10" 90° ELBOW
15. 10" TEE
16. 12 'TEE
17. 8" x 10" 90° ELBOW
18. 10" x 12" 90° ELBOW

REV	DATE	DESCRIPTION	APPR

PROJECT ENGINEER | REG NUMBER | EXP DATE

AECOM
AECOM
1194 PACIFIC STREET, SUITE 204
SAN LUIS OBISPO, CA 93401
T 805.542.9840 F 805.542.9990
www.aecom.com

CITY OF EL PASO DE ROBLES
WATER TREATMENT PLANT PROJECT

BOOSTER PUMP STATION PLAN AND SECTIONS

DESIGNED:
DETAILED:
CHECKED:
APPROVED:
DATE: November 2012
AECOM PROJECT NO. 60264606
P.R. PROJECT NO.
CADD STDS. AECOM

P04-02
SHEET
- OF -

PRELIMINARY
30% SUBMITTAL

0 1/2 1
IF THIS BAR DOES NOT MEASURE 1" THEN DRAWING IS NOT TO FULL SCALE

DWG: V:\PASO ROBLES\60264606-WTP\000 CAD\PLANSET\3-PROCESS\P04-02.dwg Layout Name: 22x34 - Plotted by: Rodriguez, David Date: 11/28/2012 - 3:48 PM
XREFS: G-BD-PR - C-LP-PR - A-FP-MEMB - S-RP-06 - D-FP-CHEM-PIPING - S-NP-09 IMAGES: CITY OF PASO LOGO_1.png -

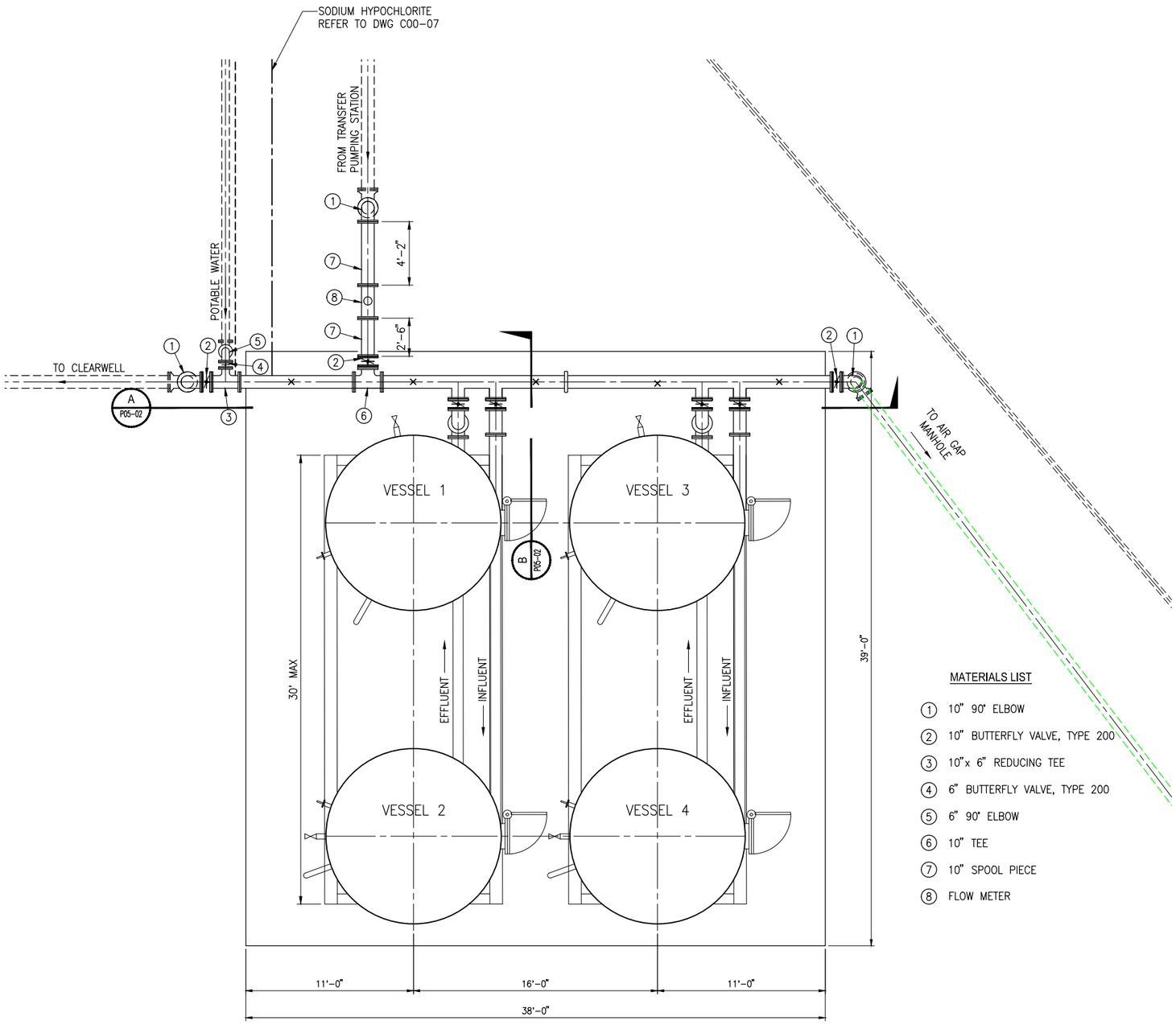

MATERIALS LIST

1. 10" 90° ELBOW
2. 10" BUTTERFLY VALVE, TYPE 200
3. 10"x 6" REDUCING TEE
4. 6" BUTTERFLY VALVE, TYPE 200
5. 6" 90° ELBOW
6. 10" TEE
7. 10" SPOOL PIECE
8. FLOW METER

NOTES:

1. × INDICATES LOCATION OF PIPE SUPPORT ON PIPE CENTERLINE

GAC PIPING PLAN

SCALE: 1/4" = 1'-0"

1 / -

PRELIMINARY 30% SUBMITTAL

0 1/2 1

IF THIS BAR DOES NOT MEASURE 1" THEN DRAWING IS NOT TO FULL SCALE

REV	DATE	DESCRIPTION	APPR
4			
3			
2			
1			

PROJECT ENGINEER | REG NUMBER | EXP DATE

AECOM
AECOM
1194 PACIFIC STREET, SUITE 204
SAN LUIS OBISPO, CA 93401
T 805.542.9840 F 805.542.9990
www.aecom.com

CITY OF EL PASO DE ROBLES
WATER TREATMENT PLANT PROJECT

GAC VESSELS PLAN

DESIGNED:
DETAILED:
CHECKED:
APPROVED:
DATE: November 2012
AECOM PROJECT NO. 60264606
P.R. PROJECT NO.
CADD STDS. AECOM

P05-01
SHEET
- OF -

DWG: V:\PASO ROBLES\60264606-WTP\000 CAD\PLANSET\3-PROCESS\P05-01.dwg Layout Name: Layout1 - Plotted by: Rodriguez, David Date: 11/28/2012 - 3:49 PM
XREFS: C-BD-PR - C-LP-PR - S-RP-06 - D-FP-CHEM-PIPING - S-NP-09 IMAGES: CITY OF PASO LOGO_1.png -

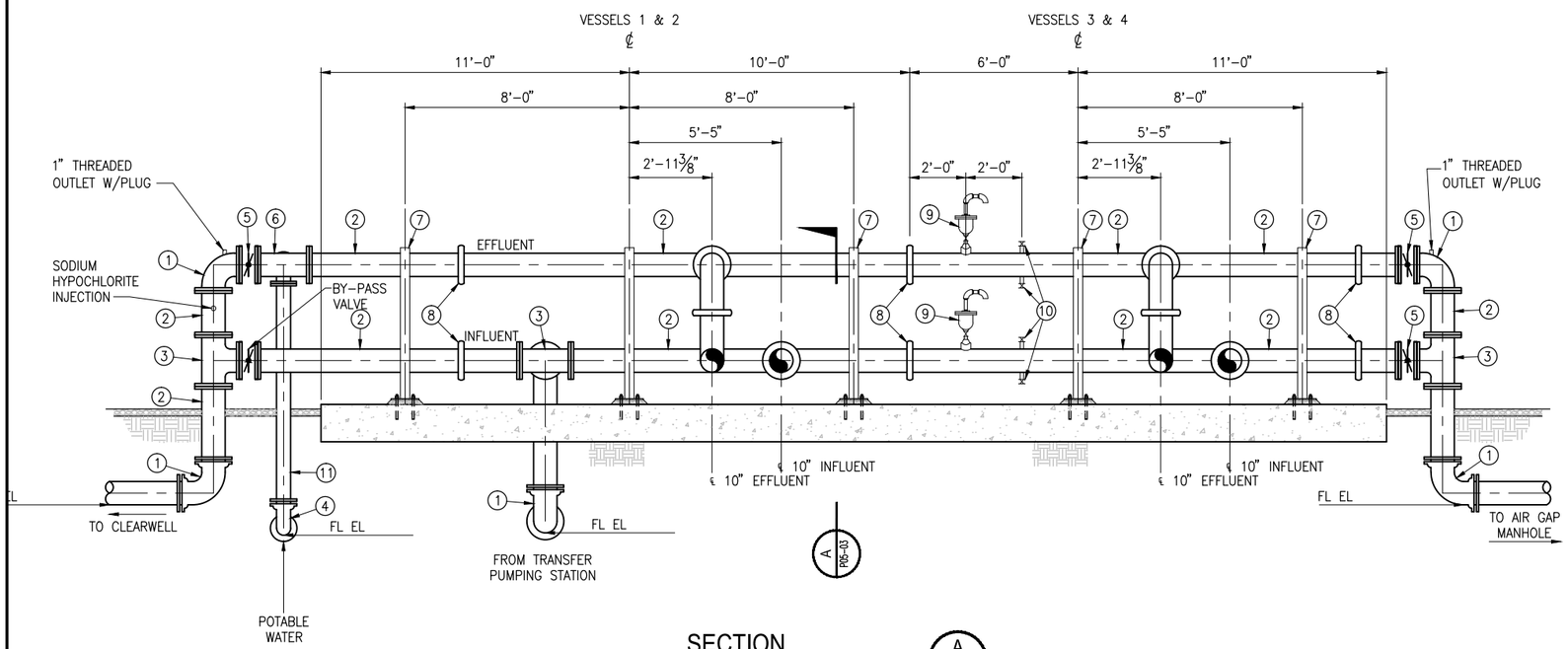

SECTION A

SCALE: 3/8" = 1'-0"

MATERIALS LIST

1. 10" 90° ELBOW
2. 10" SPOOL PIECE
3. 10" TEE
4. 6" 90° ELBOW
5. 10" BUTTERFLY VALVE, TYPE 200
6. 10"x 6" REDUCING TEE
7. PIPE SUPPORT (1 / P05-03)
8. 10" GROOVED COUPLING
9. COMBINATION AIR VALVE, TYPE 1210 (2 / PDT-06)
10. 1" THREADED OUTLET (3 / PDT-06)
11. 6" SPOOL PIECE

PRELIMINARY 30% SUBMITTAL

0 1/2 1

IF THIS BAR DOES NOT MEASURE 1" THEN DRAWING IS NOT TO FULL SCALE

REV	DATE	PROJECT ENGINEER	DESCRIPTION	REG NUMBER	EXP DATE	APPR

AECOM
AECOM
1194 PACIFIC STREET, SUITE 204
SAN LUIS OBISPO, CA 93401
T 805.542.9840 F 805.542.9990
www.aecom.com

CITY OF EL PASO DE ROBLES
WATER TREATMENT PLANT PROJECT

GAC PIPING DETAILS (1 OF 2)

DESIGNED:
DETAILED:
CHECKED:
APPROVED:
DATE: November 2012
AECOM PROJECT NO. 60264606
P.R. PROJECT NO.
CADD STDS. AECOM

P05-02
SHEET
OF -

DWG: V:\PASO ROBLES\60264606-WTP\000 CAD\PLANSET\3-PROCESS\P05-02.dwg Layout Name: Layout1 - Plotted by: Rodriguez, David Date: 11/28/2012 - 3:49 PM
XREFS: G-BD-PR IMAGES: CITY OF PASO LOGO_1.png -

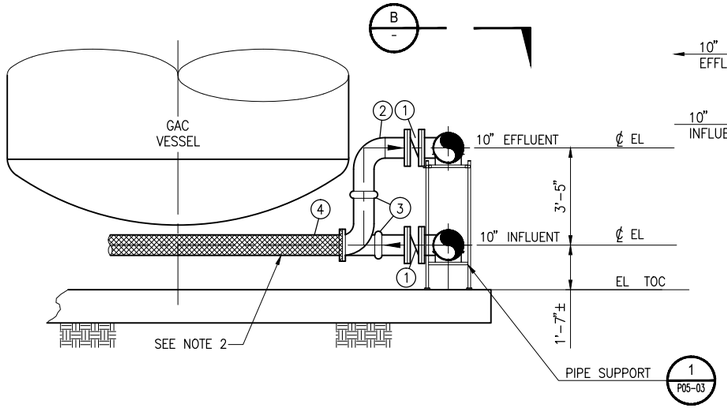

SECTION A

SCALE: 3/8" = 1'-0"

TYPICAL BOTH SKIDS

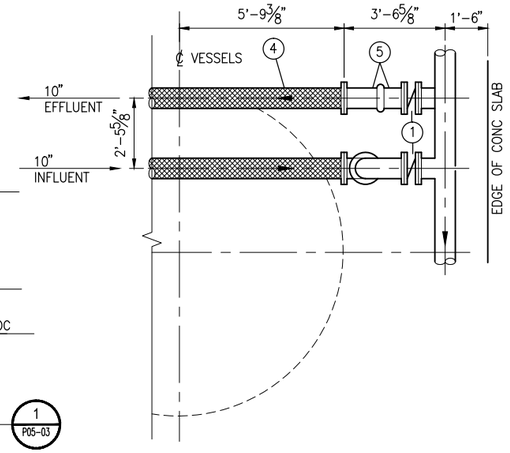

DETAIL B

SCALE: 3/8" = 1'-0"

MATERIALS LIST

1. 10" BUTTERFLY VALVE, TYPE 200
2. 10" FABRICATED STEEL 90° ELBOW
3. 10" GROOVED END COUPLING
4. 10" STL PIPE WITH FLAT FACE FLANGES BY VESSEL MFR.
5. 10" FABRICATED STEEL SPOOL PIECE

NOTES:

1. SHADING INDICATES PIPING TO BE SUPPLIED BY THE VESSEL MANUFACTURER.

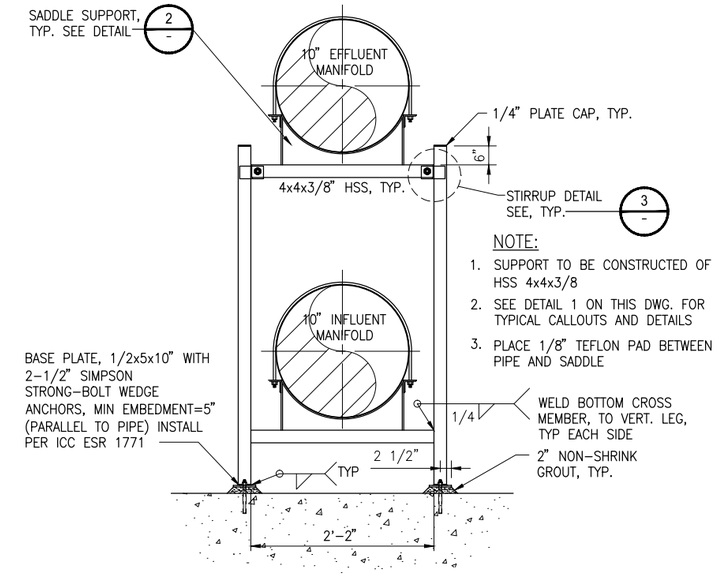

NOTE:

1. SUPPORT TO BE CONSTRUCTED OF HSS 4x4x3/8
2. SEE DETAIL 1 ON THIS DWG. FOR TYPICAL CALLOUTS AND DETAILS
3. PLACE 1/8" TEFLON PAD BETWEEN PIPE AND SADDLE

PIPE SUPPORT 1

SCALE: NTS

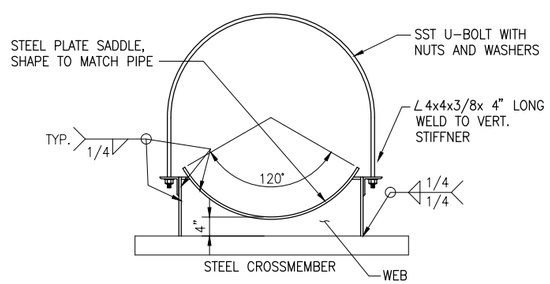

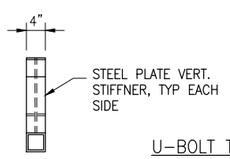

END VIEW

U-BOLT TABLE:

PIPE SIZE	U-BOLT
4" – 10"	3/8" DIA
12" – 16"	1/2" DIA

PIPE SUPPORT NOTES:

1. PLACE 1/8" THICK TEFLON PAD BETWEEN PIPE AND PIPE SADDLE (TYP). SHIM AS NECESSARY FOR FULL SUPPORT.
2. SEE PLANS FOR PIPE SIZE, TYPE, AND ELEVATION
3. ALL PIPES 4" AND LARGER SHALL BE SUPPORTED ON A PIPE SADDLE
4. SEE PLAN FOR PIPE SUPPORT SPACING
5. ALL PIPE SUPPORTS SHALL BE WELDED UNLESS SHOWN OTHERWISE. ALL WELDS SHALL BE GROUND SMOOTH.
6. ALL U-BOLTS, BOLTS, NUTS AND WASHERS SHALL BE STAINLESS STEEL.
7. ALL STEEL SUPPORTS SHALL BE FUSION BONDED EPOXY COATED.

SUPPORT MATERIAL

4" – 12", 1/4" STEEL PLATE

PIPE SADDLE 2

SCALE: NTS

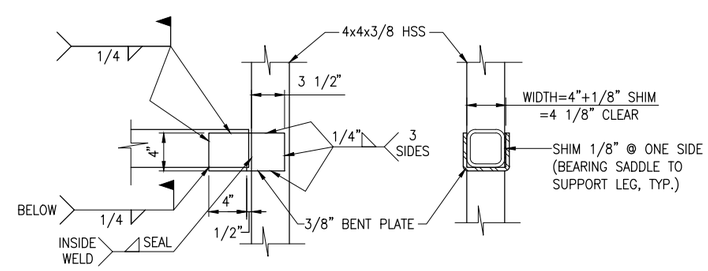

STIRRUP DETAIL 3

SCALE: NTS

PRELIMINARY 30% SUBMITTAL

0 1/2 1

IF THIS BAR DOES NOT MEASURE 1" THEN DRAWING IS NOT TO FULL SCALE

REV	DATE	DESCRIPTION	APPR

PROJECT ENGINEER | REG NUMBER | EXP DATE

AECOM
AECOM
1194 PACIFIC STREET, SUITE 204
SAN LUIS OBISPO, CA 93401
T 805.542.9840 F 805.542.9990
www.aecom.com

CITY OF EL PASO DE ROBLES
WATER TREATMENT PLANT PROJECT

GAC PIPING DETAILS

DESIGNED:
DETAILED:
CHECKED:
APPROVED:
DATE: November 2012
AECOM PROJECT NO. 60264606
P.R. PROJECT NO.
CADD STDS. AECOM

P05-03
SHEET OF -

DWG: V:\PASO ROBLES\60264606-WTP\000 CAD\PLANSET\3-PROCESS\P05-03.dwg Layout Name: Layout1 - Plotted by: Rodriguez, David Date: 11/28/2012 - 3:49 PM
XREFS: G-BD-PR IMAGES: CITY OF PASO LOGO_1.png -

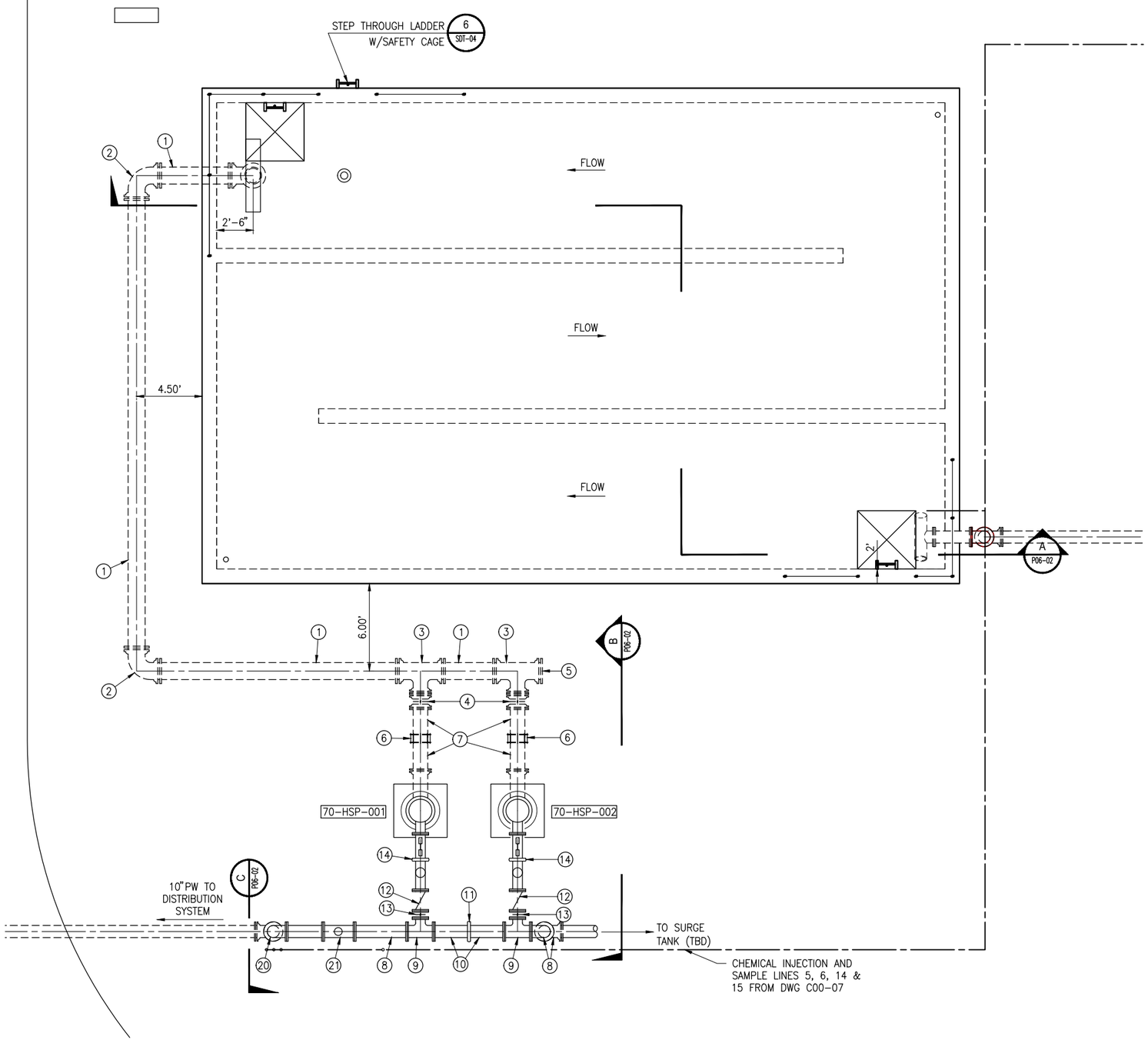

PLAN

SCALE: 1/4" = 1'-0"

MATERIAL LIST APPLIES TO: 1 (-) A (P06-02) B (P06-02) C (P06-02)

1. 14" SPOOL PIECE
2. 14" 90° ELBOW
3. 14" X 12" REDUCING TEE
4. 12" BUTTERFLY VALVE, TYPE 200
5. 14" BLIND FLANGE
6. 12" FLEXIBLE COUPLING
7. 12" SPOOL PIECE
8. 10" 90° ELBOW
9. 10" X 8" REDUCING TEE
10. 10" SPOOL PIECE
11. 10" GROOVED COUPLING
12. 8" CHECK VALVE, TYPE 790
13. 8" BUTTERFLY VALVE, TYPE 200
14. 8" GROOVED COUPLING
15. 8" SPOOL PIECE
16. VERTICAL TURBINE PUMP WITH BARREL, SEE SECTION 432150
17. 1" THREADED OUTLET WITH TYPE 300 BALL VALVE
18. PRESSURE GAUGE/ PRESSURE SWITCH
19. ADJUSTABLE PIPE SUPPORT
20. STATIC MIXER
21. 10" FLOW METER

NOTES:

1. PIPING IS TYPICAL OF BOTH PUMPS
2. ALL PUMPS DISCHARGE PIPE SIZE IS DEPENDENT UPON THE ACTUAL PUMP PROVIDED. THE CONTRACTOR SHALL COORDINATE WITH THE PUMP SUPPLIER PRIOR TO FABRICATING THE PUMP DISCHARGE PIPING.
3. INCORPORATE ANTI-VORTEX BAFFLE ON PUMP CAN PER MANUFACTURER'S RECOMMENDATIONS.

PRELIMINARY 30% SUBMITTAL

0 1/2 1

IF THIS BAR DOES NOT MEASURE 1" THEN DRAWING IS NOT TO FULL SCALE

REV	DATE	DESCRIPTION	APPR

PROJECT ENGINEER: JON HANLON
REG NUMBER
EXP DATE

AECOM
AECOM
1194 PACIFIC STREET, SUITE 204
SAN LUIS OBISPO, CA 93401
T 805.542.9840 F 805.542.9990
www.aecom.com

CITY OF EL PASO DE ROBLES
WATER TREATMENT PLANT PROJECT

CHLORINE CONTACT CHAMBER

DESIGNED: JHN
DETAILED: JPF
CHECKED: -
APPROVED:
DATE: November 2012
AECOM PROJECT NO. 60264606
P.R. PROJECT NO.
CADD STDS. AECOM

P06-01
SHEET X OF -

DWG: V:\PASO ROBLES\60264606-WTP\000 CAD\PLANSET\3-PROCESS\P06-01.dwg Layout Name: P06-01 - Plotted by: Rodriguez, David Date: 11/28/2012 - 3:53 PM
XREFS: S-RP-06 - G-BD-PR - C-LP-PR - D-FP-CHEM-PIPING - S-NP-09 IMAGES: CITY OF PASO LOGO_1.png -

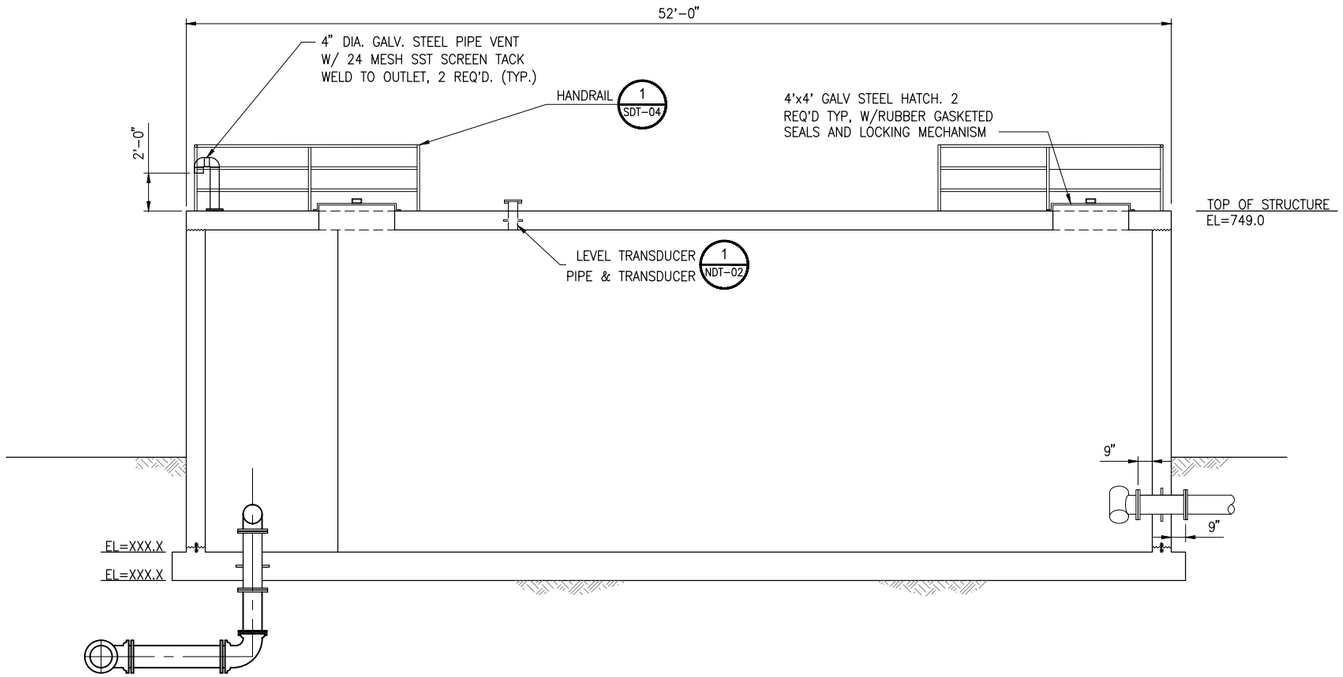

SECTION A
SCALE: 1/4" = 1'-0"

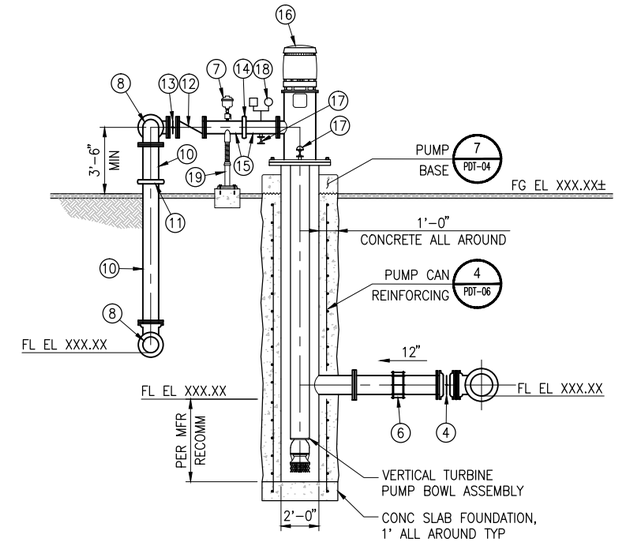

SECTION B
SCALE: 1/4" = 1'-0"

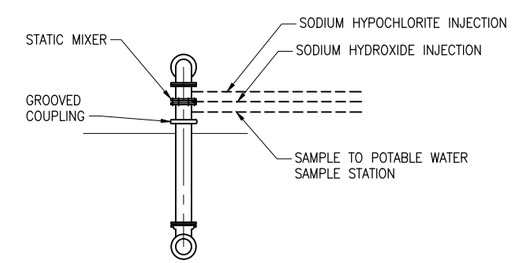

SECTION C
SCALE: 1/4" = 1'-0"

PRELIMINARY
30% SUBMITTAL

0 1/2 1
IF THIS BAR DOES NOT MEASURE 1" THEN DRAWING IS NOT TO FULL SCALE

REV	DATE	DESCRIPTION	APPR

PROJECT ENGINEER | REG NUMBER | EXP DATE

AECOM
AECOM
1194 PACIFIC STREET, SUITE 204
SAN LUIS OBISPO, CA 93401
T 805.542.9840 F 805.542.9990
www.aecom.com

CITY OF EL PASO DE ROBLES
WATER TREATMENT PLANT PROJECT

CLEARWELL SECTION

DESIGNED:
DETAILED:
CHECKED:
APPROVED:
DATE: November 2012
AECOM PROJECT NO. 60264606
P.R. PROJECT NO.
CADD STDS. AECOM

P06-02
SHEET
OF -

DWG: V:\PASO ROBLES\60264606-WTP\000 CAD\PLANSET\3-PROCESS\P06-02.dwg Layout Name: Layout1 - Plotted by: Rodriguez, David Date: 11/28/2012 - 3:49 PM
XREFS: G-BD-PR IMAGES: CITY OF PASO LOGO_1.png -

CHEMICAL PROCESS LEGEND				
		TANK FILL AND METERING PUMP SUCTION LINES		
PROCESS	CHEMICAL NAME	SUCTION PIPE	FILL CARRIER PIPE	CONTAINMENT PIPE
81	POTASIUM PERMANGANATE			
82	POLYALUMINUM CHLORIDE	1 1/2"	2"	4"
83	SODIUM HYPOCHLORITE	1"	2"	4"
84	SODIUM HYDROXIDE	1"	2"	4"

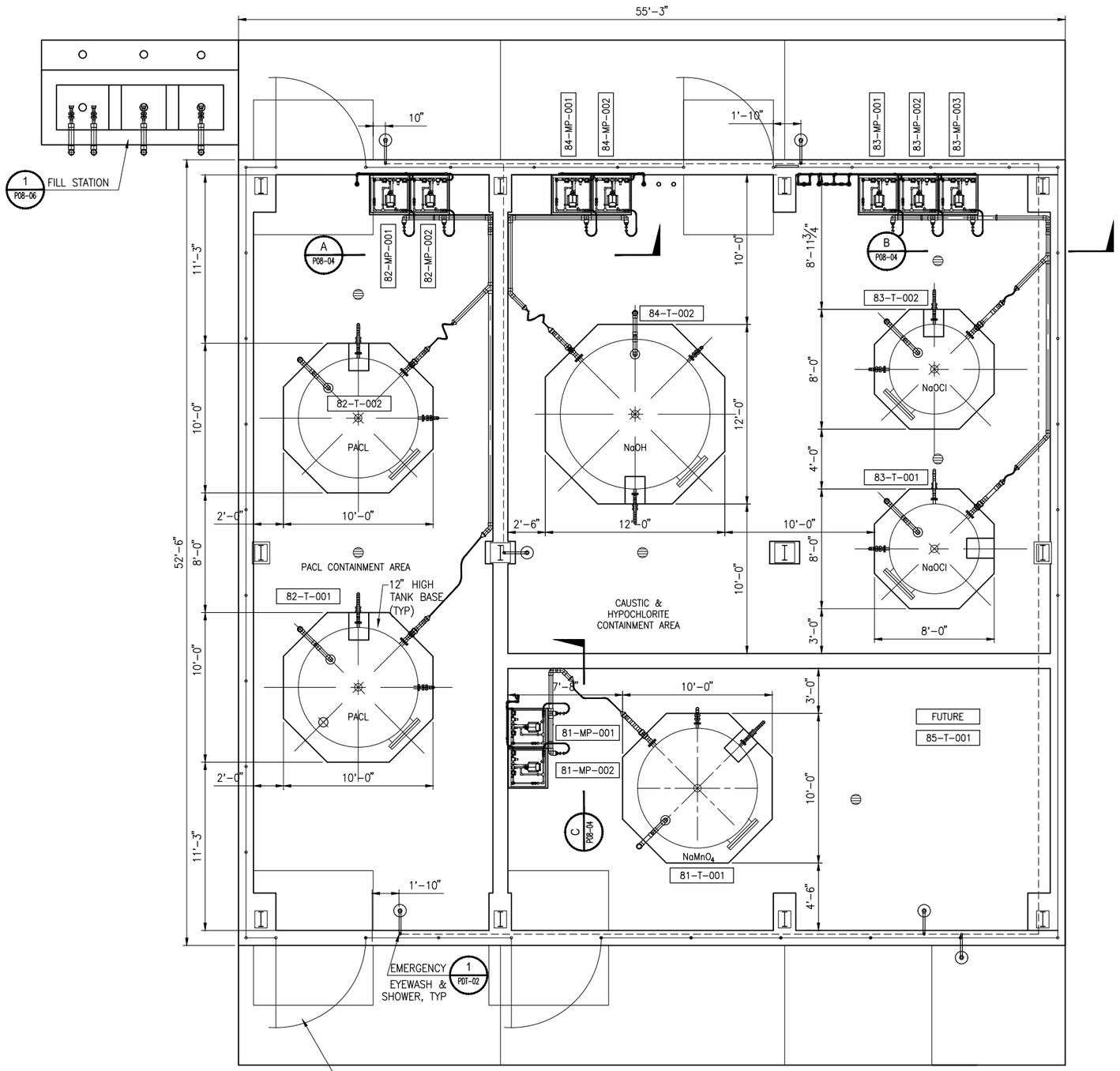

PLAN 1/-

SCALE: 1/4" = 1'-0"

NOTE:

1. COAT ALL CONCRETE FILL STATION, PEDESTALS, FLOOR, SUMPS, TANK BASE, AND INTERIOR WALLS WITHIN THE CHEMICAL BUILDING PER SPEC. 099720.

2. CONNECT CHEMICAL FEED LINES TO FEED PUMPS USING BRAIDED PVC HOSE, SCH. 80 PVC FITTINGS, AND SST WORM GEAR HOSE CLAMPS.

3. EPOXY ANCHOR PUMP SKID AT LOCATIONS SHOWN WITH SST ANCHOR BOLTS.

4. SEE SPEC 400775 FOR TANK AND EQUIPMENT IDENTIFICATION TAG REQUIREMENTS.

5. COAT ALL SST ANCHOR BOLTS W/ SCOTCHKOTE 306.

6. PROVIDE STRUT SUPPORT FOR WALL MOUNTED PVC PIPE AT EVERY 5' PER SPEC 400764.

7. SERVICE WATER CAN BE RUN OVERHEAD AT CONTRACTOR'S DISCRETION.

8. ALL TANK DISCHARGES SHALL HAVE FLEXIBLE CONNECTION USING BRAIDED PVC HOSE.

PRELIMINARY 30% SUBMITTAL

IF THIS BAR DOES NOT MEASURE 1" THEN DRAWING IS NOT TO FULL SCALE

REV	DATE	DESCRIPTION	APPR

PROJECT ENGINEER | REG NUMBER | EXP DATE

AECOM
AECOM
1194 PACIFIC STREET, SUITE 204
SAN LUIS OBISPO, CA 93401
T 805.542.9840 F 805.542.9990
www.aecom.com

CITY OF EL PASO DE ROBLES
WATER TREATMENT PLANT PROJECT

CHEMICAL FEED SYSTEM & STORAGE AREA PLAN

DESIGNED:
DETAILED:
CHECKED:
APPROVED:
DATE: November 2012
AECOM PROJECT NO. 60264606
P.R. PROJECT NO.
CADD STDS. AECOM

P08-01
SHEET OF -

DWG: V:\PASO ROBLES\60264606-WTP\000 CAD\PLANSET\3-PROCESS\P08-01.dwg Layout Name: Layout1 - Plotted by: Rodriguez, David Date: 11/28/2012 - 3:49 PM
XREFS: D-FP-CHEM-PIPING - S-NP-09 - G-BD-PR IMAGES: CITY OF PASO LOGO_1.png -

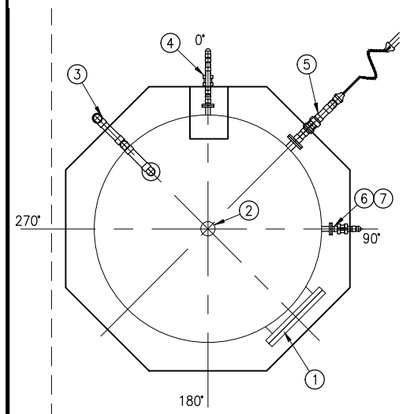

82-T-001 & 002 PACL NOZZLE ORIENTATION (1)

SCALE: 3/8"=1'-0"

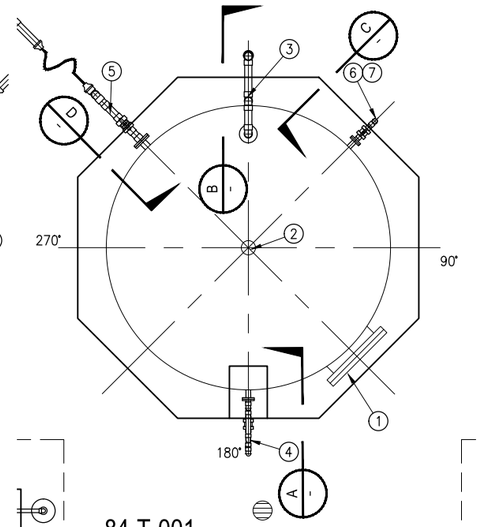

84-T-001 SODIUM HYDROXIDE (NaOH) NOZZLE ORIENTATION (2)

SCALE: 3/8"=1'-0"

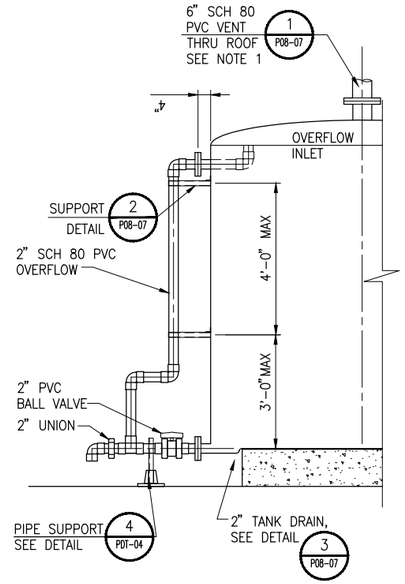

DRAIN AND OVERFLOW (A)

SCALE: 1/2"=1'-0"

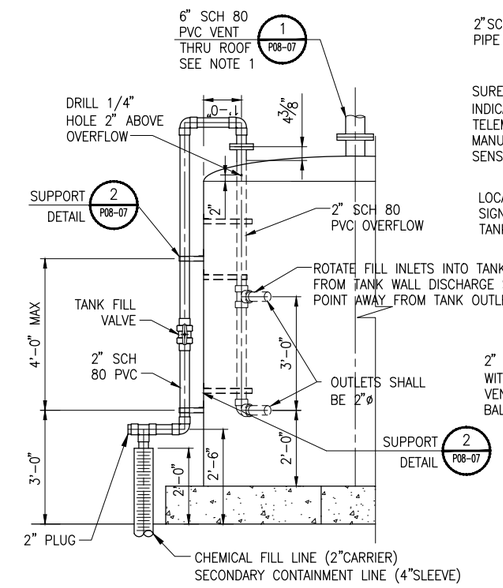

FILL / RECIRCULATION RETURN (B)

SCALE: 1/2"=1'-0"

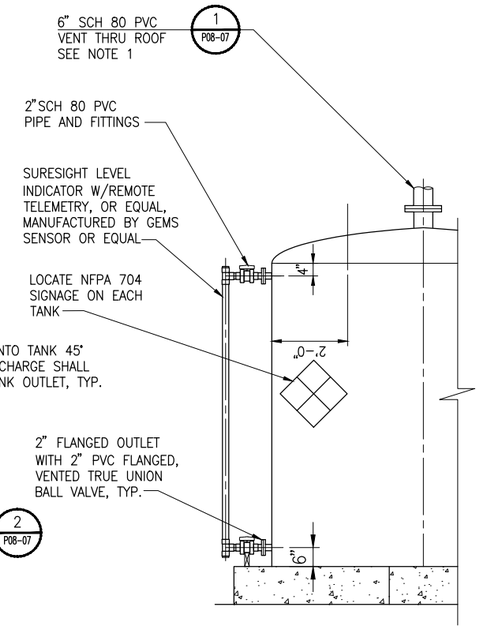

LIQUID LEVEL INDICATOR (C)

SCALE: 1/2"=1'-0"

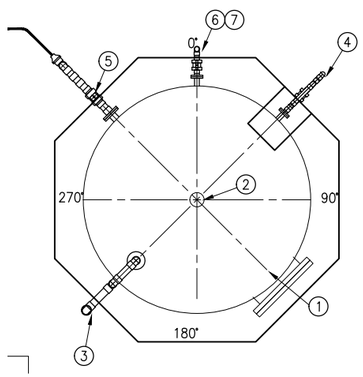

81-T-001 SODIUM PERMANGANATE NOZZLE ORIENTATION (3)

SCALE: 3/8"=1'-0"

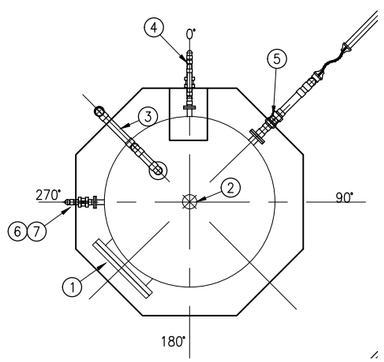

83-T-001 & 002 SODIUM HYPOCHLORITE (NaOCl) NOZZLE ORIENTATION (4)

SCALE: 3/8"=1'-0"

NOTES:

1. ONLY NAOCL TANKS REQUIRE ROOF VENTS. ATTACH SCREENED VENTS DIRECTLY OVER TANK VENT FOR ALL OTHER TANKS.

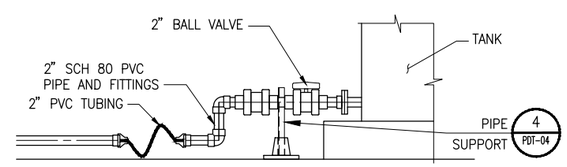

TANK OUTLET TO CHEMICAL FEED PUMPS (D)

SCALE: 1/2"=1'-0"

ID TAG	CHEMICAL SERVICE	MATERIAL	DIAMETER	SHELL HEIGHT	VOLUME
81-T-001	SODIUM PERMANGANATE	FRP	8 FT	8 FT	2,960 GAL
82-T-001	POLYALUMINUM CHLORIDE	FRP	8 FT	8 FT	2,960 GAL
82-T-002	POLYALUMINUM CHLORIDE	FRP	8 FT	8 FT	2,960 GAL
83-T-001	SODIUM HYPOCHLORITE	FRP	6 FT	8 FT	1,680 GAL
83-T-002	SODIUM HYPOCHLORITE	FRP	6 FT	8 FT	1,680 GAL
84-T-001	SODIUM HYDROXIDE	FRP	10 FT	10 FT	5,800 GAL

NOZZLE AND PORT ORIENTATION

ITEM	81-T-001	82-T-001	82-T-002	83-T-001	83-T-002	84-T-001	FLG SIZE	DESCRIPTION	DETAIL VIEW	ELEVATION
①	135	135	135	225	225	135	24"	ACCESS MANWAY	-	CL 24" ABOVE TANK PAD
②	-	-	-	-	-	-	6"	VENT LINE	-	CENTER OF TANK ROOF
③	225	315	315	315	315	0	2"	FILL LINE	SECTION B	CL 12" FROM EDGE OF SIDEWALL, VALVE 4' ABOVE FF (B / -)
④	45	0	0	0	0	180	2"	DRAIN/OVERFLOW	SECTION A	CL 6" BELOW TOP OF SIDEWALL (A / -)
⑤	315	45	45	45	45	315	2"	OUTLET	SECTION D	CL 6" ABOVE TANK PAD (D / -)
⑥	0	90	90	270	270	45	2"	MAGNETIC LEVEL GAUGE (UPPER PORT)	SECTION C	CL 4" BELOW TOP OF SIDEWALL (C / -)
⑦	0	90	90	270	270	45	2"	MAGNETIC LEVEL GAUGE (LOWER PORT)	SECTION C	CL 6" ABOVE TANK PAD (C / -)

PRELIMINARY 30% SUBMITTAL

0 1/2 1

IF THIS BAR DOES NOT MEASURE 1" THEN DRAWING IS NOT TO FULL SCALE

REV	DATE	DESCRIPTION	APPR
1			
2			
3			
4			

PROJECT ENGINEER | REG NUMBER | EXP DATE

AECOM
1194 PACIFIC STREET, SUITE 204
SAN LUIS OBISPO, CA 93401
T 805.542.9990 F 805.542.9940
www.aecom.com

CITY OF EL PASO DE ROBLES
WATER TREATMENT PLANT PROJECT

CHEMICAL STORAGE AND FEED SYSTEM AREA SECTIONS AND DETAILS

DESIGNED:
DETAILED:
CHECKED:
APPROVED:
DATE: November 2012
AECOM PROJECT NO. 60264606
P.R. PROJECT NO.
CADD STDS. AECOM

P08-03
SHEET - OF -

DWG: V:\PASO ROBLES\60264606-WTP\000 CAD\PLANSET\3-PROCESS\P08-03.dwg Layout Name: Layout1 - Plotted by: Rodriguez, David Date: 11/28/2012 - 3:49 PM
XREFS: C-BD-PR - S-NP-09 - D-FP-CHEM-PIPING IMAGES: CITY OF PASO LOGO_1.png -

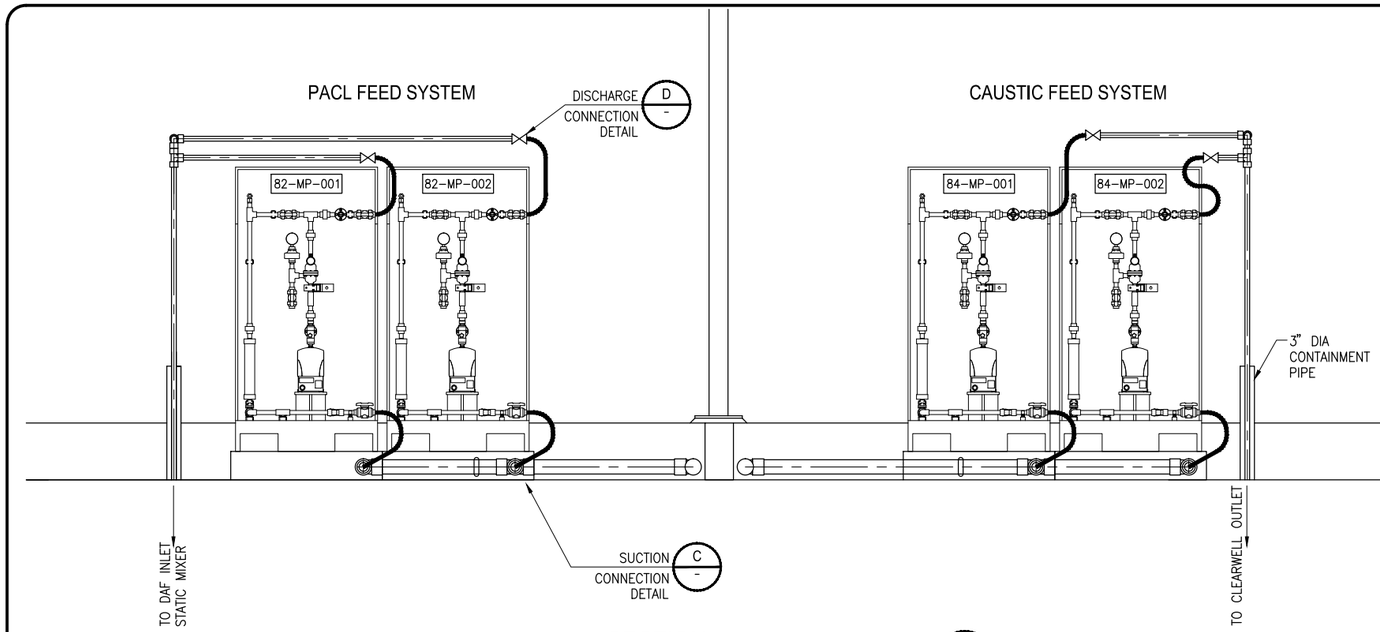

SECTION A -

SCALE 3/4" = 1'-0"

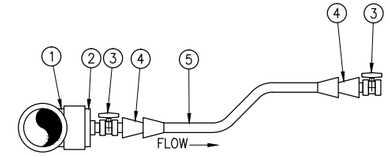

SUCTION CONNECTION DETAIL C -

NOT TO SCALE

POLYMER CONNECTION SIZING:

1. 2" TEE SxSxNPT
2. 2"x ½" NPT BUSHING
3. ½" NPT BALL VALVE
4. ½" NPT HOSE BARB W/ SST WORM GEAR HOSE CLAMP
5. ½" PVC TUBING
6. ¾" SxNPT ADAPTER
7. ¾" SCH 80 PVC

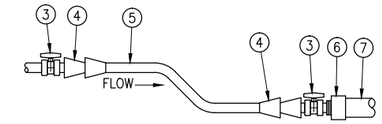

DISCHARGE CONNECTION DETAIL D -

NOT TO SCALE

CHEMICAL CONNECTION SIZING:

1. 1" TEE SxSxNPT
2. 1"x ½" NPT BUSHING
3. ½" NPT BALL VALVE
4. ½" NPT HOSE BARB W/ SST WORM GEAR HOSE CLAMP
5. ½" PVC TUBING
6. ¾"" SxNPT ADAPTER
7. ¾"" SCH 80 PVC

NOTES:

1. CHEMICAL PIPING TO BE SUPPORTED PER 4 PDT-04 / 5 PDT-04

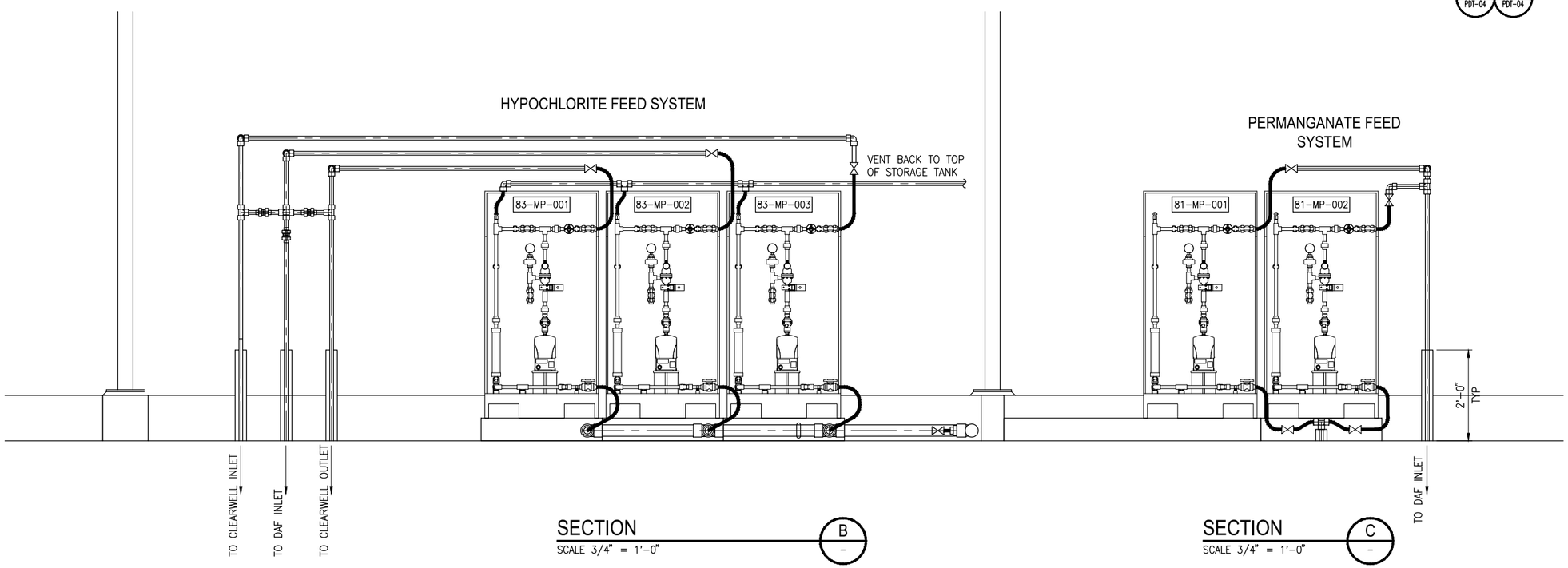

SECTION B -

SCALE 3/4" = 1'-0"

SECTION C -

SCALE 3/4" = 1'-0"

PRELIMINARY 30% SUBMITTAL

0 1/2 1

IF THIS BAR DOES NOT MEASURE 1" THEN DRAWING IS NOT TO FULL SCALE

REV	DATE	DESCRIPTION	APPR
1			
2			
3			
4			

PROJECT ENGINEER | REG NUMBER | EXP DATE

AECOM
AECOM
1194 PACIFIC STREET, SUITE 204
SAN LUIS OBISPO, CA 93401
T 805.542.9840 F 805.542.9990
www.aecom.com

CITY OF EL PASO DE ROBLES
WATER TREATMENT PLANT PROJECT

CHEMICAL FEED SYSTEM & STORAGE AREA SECTIONS AND DETAILS

DESIGNED:
DETAILED:
CHECKED:
APPROVED:
DATE: November 2012
AECOM PROJECT NO. 60264606
P.R. PROJECT NO.
CADD STDS. AECOM

P08-04
SHEET
- OF -

DWG: V:\PASO ROBLES\60264606-WTP\000 CAD\PLANSET\3-PROCESS\P08-04.dwg Layout Name: Layout1 - Plotted by: Rodriguez, David Date: 11/28/2012 - 3:49 PM
XREFS: G-BD-PR IMAGES: CITY OF PASO LOGO_1.png -

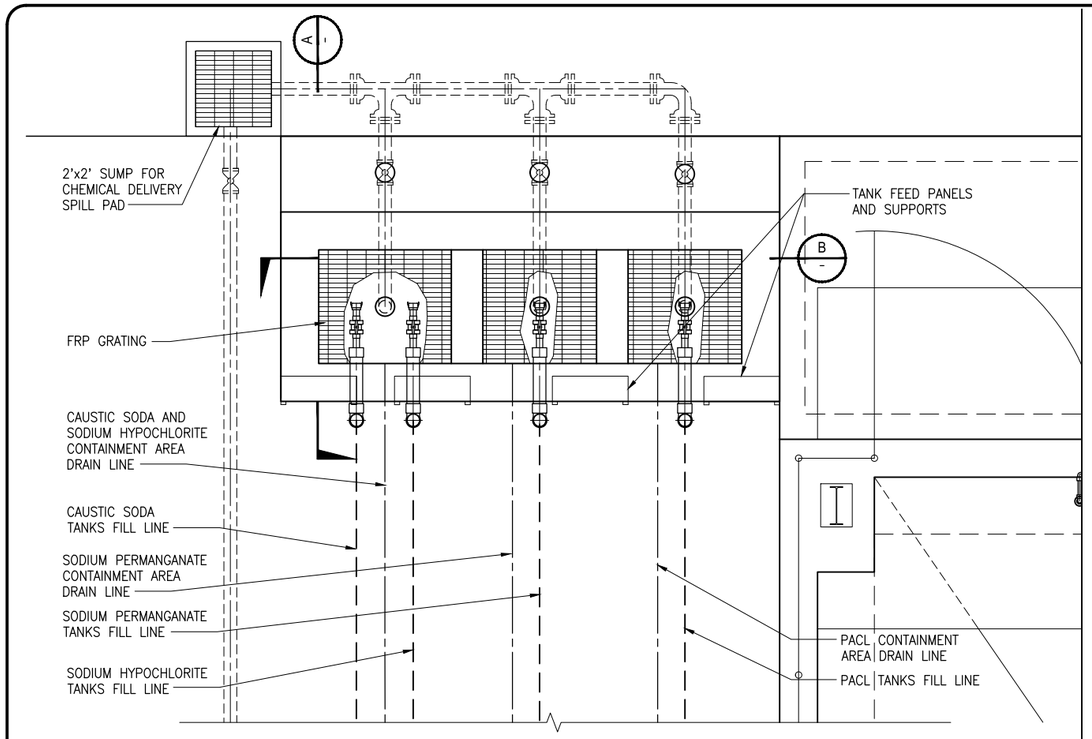

FILL STATION PIPING PLAN (1)

SCALE:1/2"=1'-0"

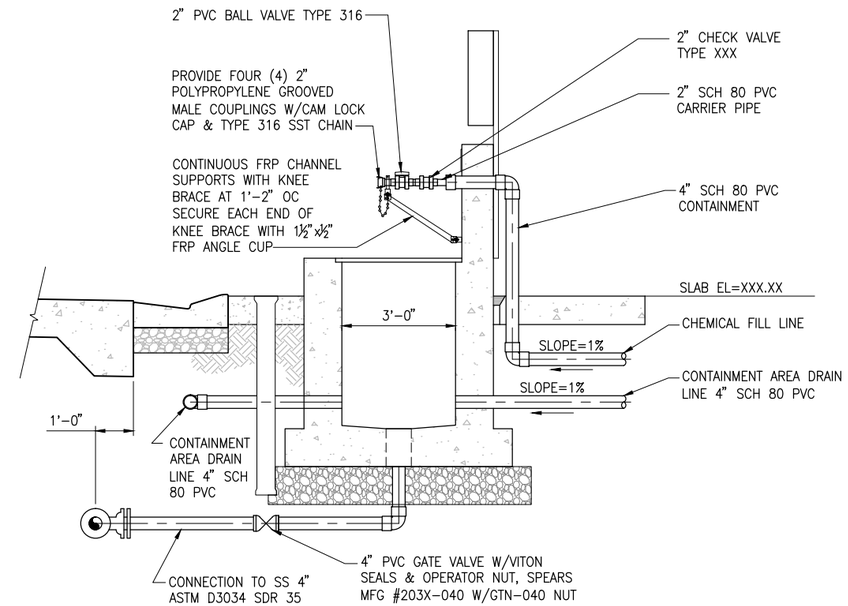

FILL STATION SECTION (A)

SCALE:1/2"=1'-0"

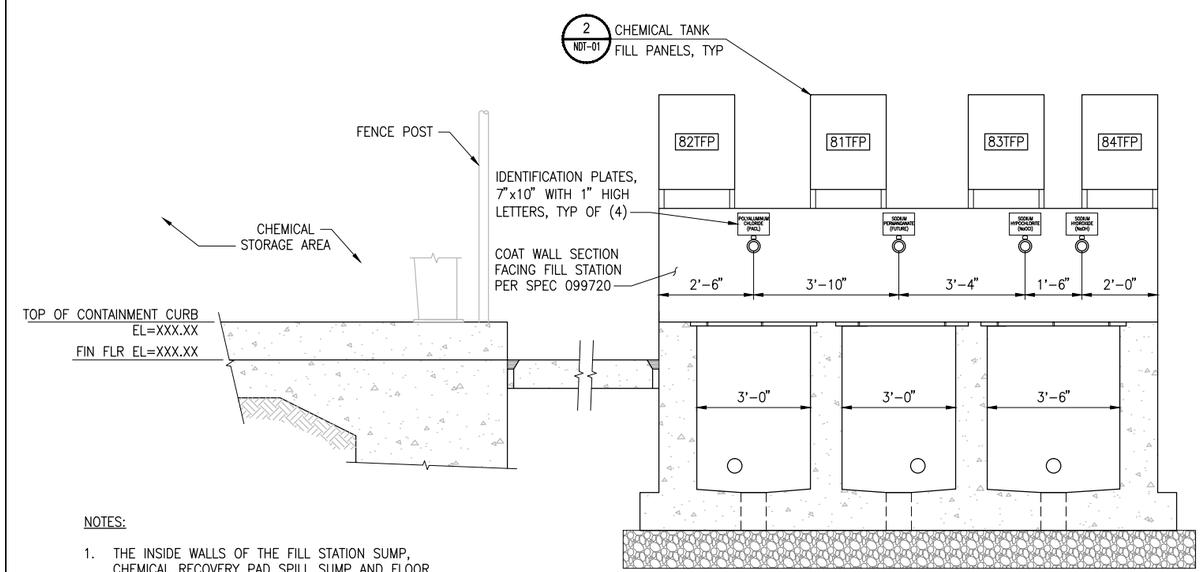

NOTES:

1. THE INSIDE WALLS OF THE FILL STATION SUMP, CHEMICAL RECOVERY PAD SPILL SUMP AND FLOOR, SHALL BE COATED WITH CHEMICAL RESISTANT COATING PER SPECIFICATION 099720.
2. EXTERIOR WALL SECTIONS & SUMP AROUND FILL STATION, SHALL BE COATED WITH CHEMICAL RESISTANT COATING PER SPEC. 099720.

FILL STATION SECTION (B)

SCALE:1/2"=1'-0"

PRELIMINARY 30% SUBMITTAL

0 1/2 1

IF THIS BAR DOES NOT MEASURE 1" THEN DRAWING IS NOT TO FULL SCALE

REV	DATE	DESCRIPTION	APPR

PROJECT ENGINEER | REG NUMBER | EXP DATE

AECOM
AECOM
1194 PACIFIC STREET, SUITE 204
SAN LUIS OBISPO, CA 93401
T 805.542.9840 F 805.542.9990
www.aecom.com

CITY OF EL PASO DE ROBLES
WATER TREATMENT PLANT PROJECT

CHEMICAL FILL STATION PLAN & SECTIONS

DESIGNED:
DETAILED:
CHECKED:
APPROVED:
DATE: November 2012
AECOM PROJECT NO. 60264606
P.R. PROJECT NO.
CADD STDS. AECOM

P08-06
SHEET - OF -

DWG: V:\PASO ROBLES\60264606-WTP\000 CAD\PLANSET\3-PROCESS\P08-06.dwg Layout Name: Layout1 (2) - Plotted by: Rodriguez, David Date: 11/28/2012 - 3:49 PM
XREFS: G-BD-PR - C-LP-PR - S-RP-06 - D-FP-CHEM-PIPING - S-NP-09 IMAGES: CITY OF PASO LOGO_1.png -

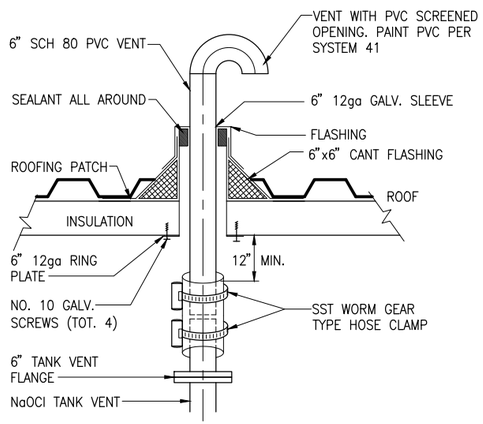

VENT ROOF PENETRATION

SCALE: N.T.S.

1 / -

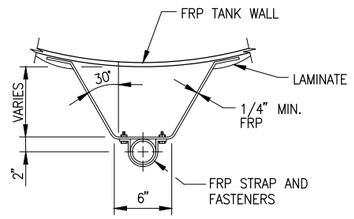

SUPPORT DETAIL

NTS

2 / -

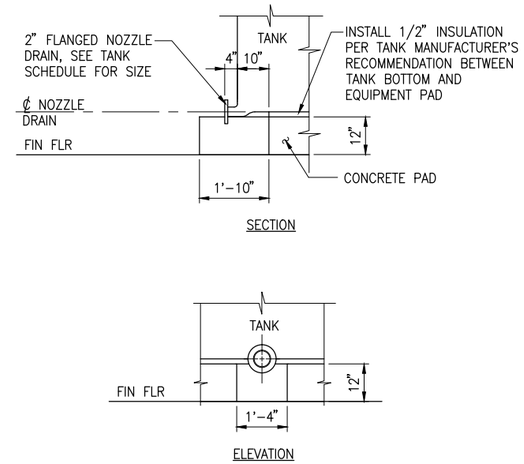

DRAIN DETAIL

SCALE: 1/2"=1'-0"

3 / -

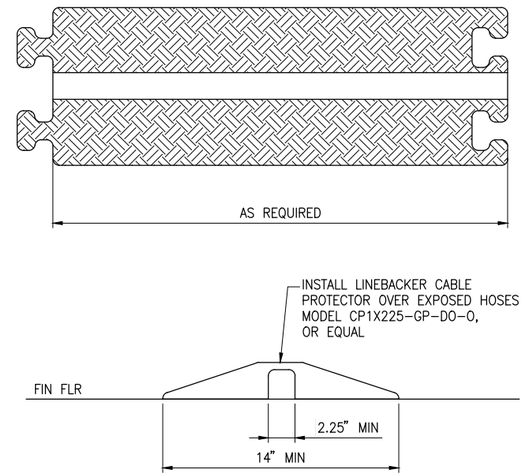

HOSE GUARD DETAIL

SCALE: NTS

4 / -

PRELIMINARY
30% SUBMITTAL

0 1/2 1

IF THIS BAR DOES NOT MEASURE 1" THEN DRAWING IS NOT TO FULL SCALE

REV	DATE	DESCRIPTION	APPR
1			
2			
3			
4			

PROJECT ENGINEER | REG NUMBER | EXP DATE

AECOM
AECOM
1194 PACIFIC STREET, SUITE 204
SAN LUIS OBISPO, CA 93401
T 805.542.9840 F 805.542.9990
www.aecom.com

CITY OF EL PASO DE ROBLES
WATER TREATMENT PLANT PROJECT

MISCELLANEOUS CHEMICAL DETAILS

DESIGNED:
DETAILED:
CHECKED:
APPROVED:
DATE: November 2012

AECOM PROJECT NO.
60264606

P.R. PROJECT NO.

CADD STDS.
AECOM

P08-07
SHEET
- OF -

DWG: V:\PASO ROBLES\60264606-WTP\000 CAD\PLANSET\3-PROCESS\P08-07.dwg Layout Name: Paper - Plotted by: Rodriguez, David Date: 11/28/2012 - 4:25 PM
XREFS: G-BD-PR IMAGES: CITY OF PASO LOGO_1.png -

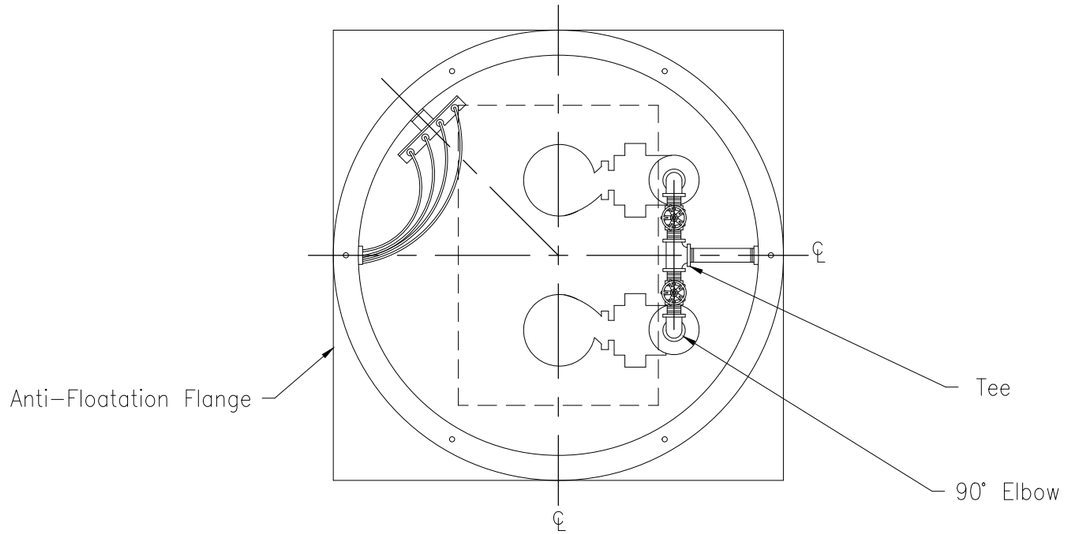

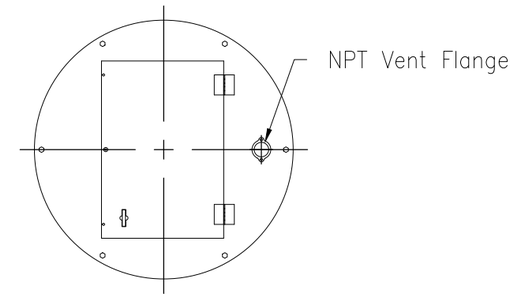

Hinged and Lockable Cover

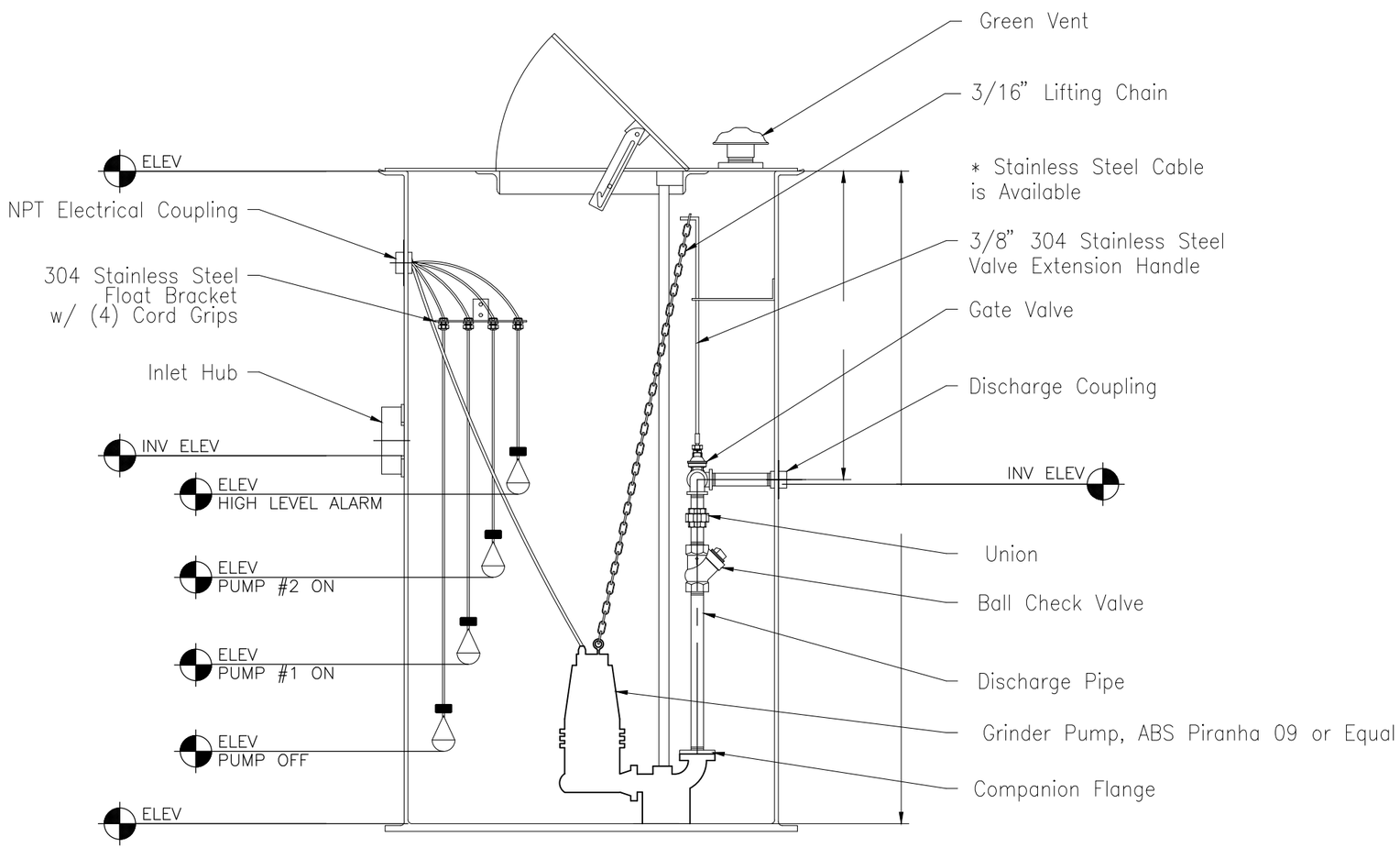

PRELIMINARY 30% SUBMITTAL

0 1/2 1

IF THIS BAR DOES NOT MEASURE 1" THEN DRAWING IS NOT TO FULL SCALE

REV	DATE	DESCRIPTION	APPR

PROJECT ENGINEER: JON HANLON
REG NUMBER
EXP DATE

AECOM
AECOM
1194 PACIFIC STREET, SUITE 204
SAN LUIS OBISPO, CA 93401
T 805.542.9840 F 805.542.9990
www.aecom.com

CITY OF EL PASO DE ROBLES
WATER TREATMENT PLANT PROJECT

SEWER LIFT STATION
PLAN AND SECTION

DESIGNED: JJR
DETAILED: JPF
CHECKED: -
APPROVED:
DATE: November 2012
AECOM PROJECT NO. 60264606
P.R. PROJECT NO.
CADD STDS. AECOM

P09-01
SHEET
- OF -

DWG: V:\PASO ROBLES\60264606-WTP\000 CAD\PLANSET\3-PROCESS\P09-01.dwg Layout Name: P09-01 - Plotted by: Rodriguez, David Date: 11/28/2012 - 3:50 PM
XREFS: G-BD-PR - C-LP-PR - S-RP-06 - D-FP-CHEM-PIPING - S-NP-09 - A-FP-MEMB IMAGES: CITY OF PASO LOGO_1.png -

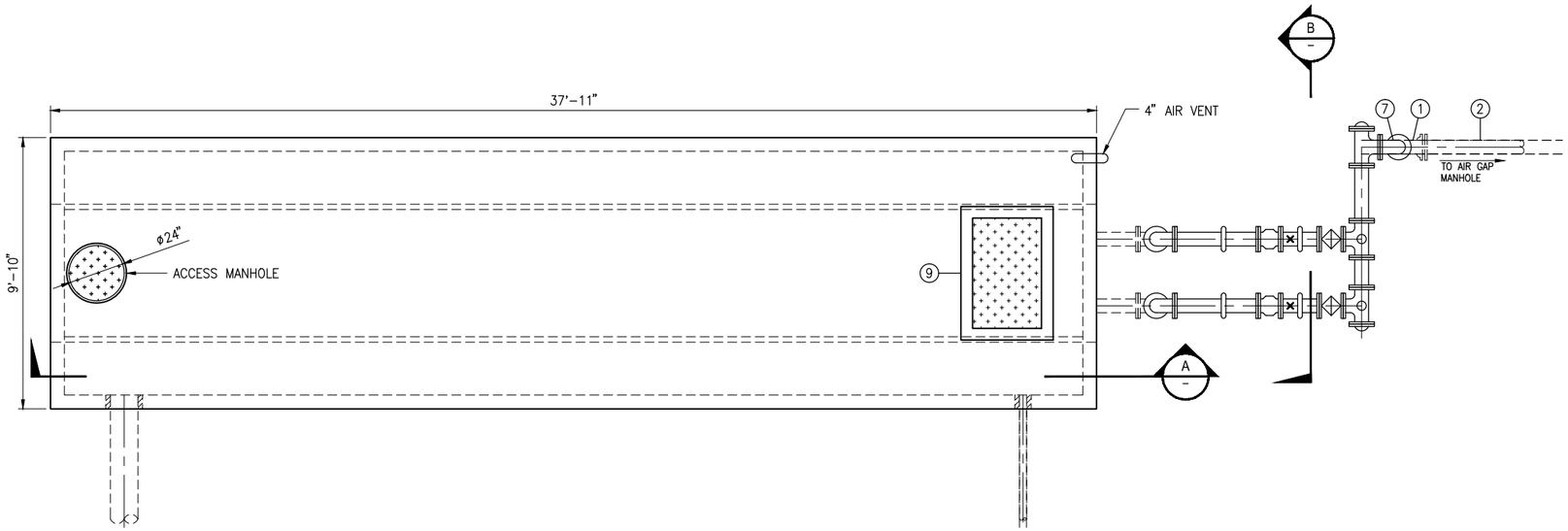

RESIDUALS TANK (1)

SCALE: 3/8" = 1'-0"

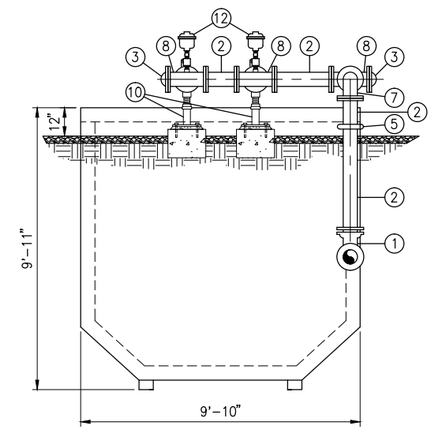

SECTION (B)

SCALE: 3/8" = 1'-0"

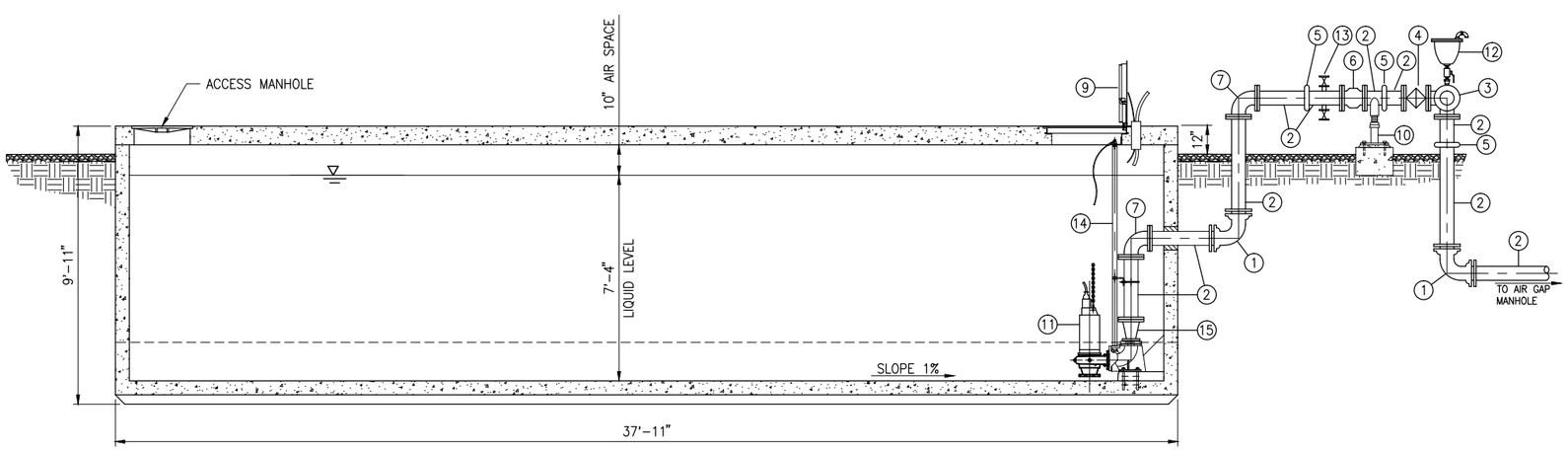

SECTION (A)

SCALE: 3/8" = 1'-0"

MATERIAL LIST APPLIES TO (1) (A) (B)

ITEM	DESCRIPTION
1	6" 90° ELBOW, MJxMJ
2	6"ø DIP SPOOL
3	6" BLIND FLANGE
4	6" PLUG VALVE, FLGxFLG
5	6" GROOVED END COUPLING
6	6" CHECK VALVE, TYPE 790
7	6" 90° ELBOW, FLGxFLG
8	6" TEE, FLG'D
9	30"x48" ALUMINUM HATCH COVER PER SPECIFICATION SECTION 055300
10	ADJUSTABLE PIPE SUPPORT (1 / PDT-04)
11	SUBMERSIBLE PUMP SEE SPECIFICATION SECTION 432132
12	1" COMBINATION AIR VALVE, TYPE 1210
13	1" THREADED OUTLET
14	TYPE 316 STAINLESS STEEL SLIDE RAIL SYSTEM
15	3"x6" REDUCER, FLGxFLG

NOTES:

1. PIPING IS TYPICAL OF BOTH PUMPS
2. ALL PUMPS DISCHARGE PIPE SIZE IS DEPENDENT UPON THE ACTUAL PUMP PROVIDED. THE CONTRACTOR SHALL COORDINATE WITH THE PUMP SUPPLIER PRIOR TO FABRICATING THE PUMP DISCHARGE PIPING.

PRELIMINARY 30% SUBMITTAL

0 1/2 1
IF THIS BAR DOES NOT MEASURE 1" THEN DRAWING IS NOT TO FULL SCALE

REV	DATE	DESCRIPTION	APPR

PROJECT ENGINEER JOM HANLON
REG NUMBER
EXP DATE

AECOM
AECOM
1194 PACIFIC STREET, SUITE 204
SAN LUIS OBISPO, CA 93401
T 805.542.9840 F 805.542.9990
www.aecom.com

CITY OF EL PASO DE ROBLES
WATER TREATMENT PLANT PROJECT

RESIDUALS TANK PLAN AND DETAILS

DESIGNED: JJR
DETAILED: JPF
CHECKED: -
APPROVED:
DATE: November 2012
AECOM PROJECT NO. 60264606
P.R. PROJECT NO.
CADD STDS. AECOM

P09-02
SHEET X OF -

DWG: V:\PASO ROBLES\60264606-WTP\000 CAD\PLANSET\3-PROCESS\P09-02.dwg Layout Name: P09-02 - Plotted by: Rodriguez, David Date: 11/28/2012 - 3:50 PM
XREFS: G-BD-PR - C-LP-PR - S-RP-06 - D-FP-CHEM-PIPING - S-NP-09 - A-FP-MEMB IMAGES: CITY OF PASO LOGO_1.png -

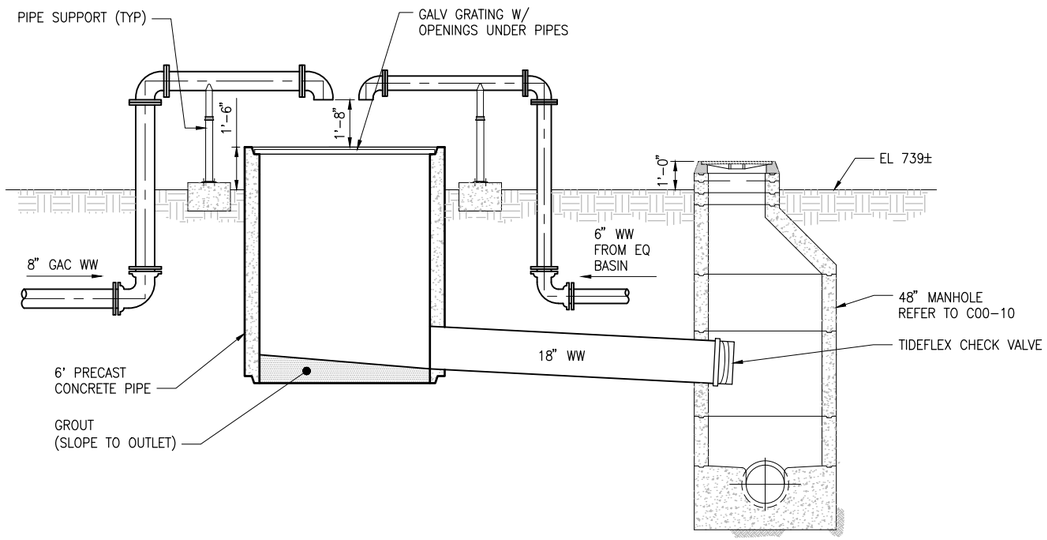

AIR GAP

SCALE: 3/8"=1'-0"

1 / -

PRELIMINARY
30% SUBMITTAL

0 1/2 1

IF THIS BAR DOES NOT MEASURE 1" THEN DRAWING IS NOT TO FULL SCALE

REV	DATE	DESCRIPTION	APPR
4			
3			
2			
1			

PROJECT ENGINEER: JON HANLON
REG NUMBER
EXP DATE

AECOM
AECOM
1194 PACIFIC STREET, SUITE 204
SAN LUIS OBISPO, CA 93401
T 805.542.9840 F 805.542.9990
www.aecom.com

CITY OF EL PASO DE ROBLES
WATER TREATMENT PLANT PROJECT

RESIDUALS TANK PLAN AND DETAILS

DESIGNED: JJR
DETAILED: JPF
CHECKED: -
APPROVED:
DATE: November 2012
AECOM PROJECT NO. 60264606
P.R. PROJECT NO.
CADD STDS. AECOM

P09-03
SHEET
- OF -

DWG: V:\PASO ROBLES\60264606-WTP\000 CAD\PLANSET\3-PROCESS\P09-03.dwg Layout Name: P09-03 - Plotted by: Rodriguez, David Date: 11/28/2012 - 3:50 PM
XREFS: G-BD-PR IMAGES: CITY OF PASO LOGO_1.png -

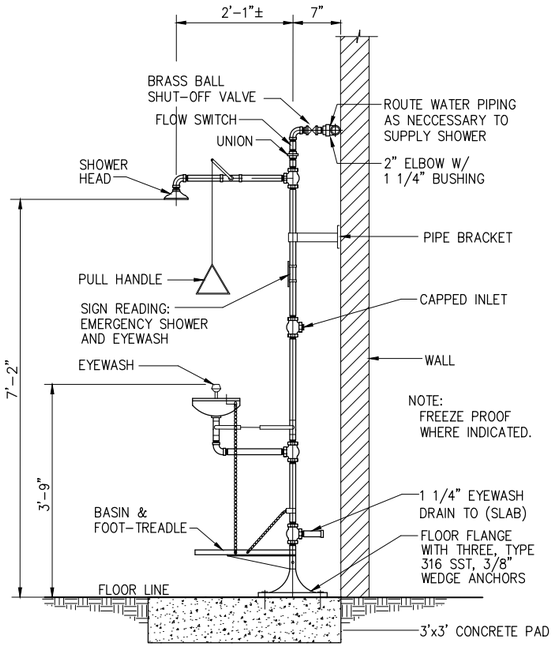

EMERGENCY EYEWASH (1 / -)

SCALE: NONE

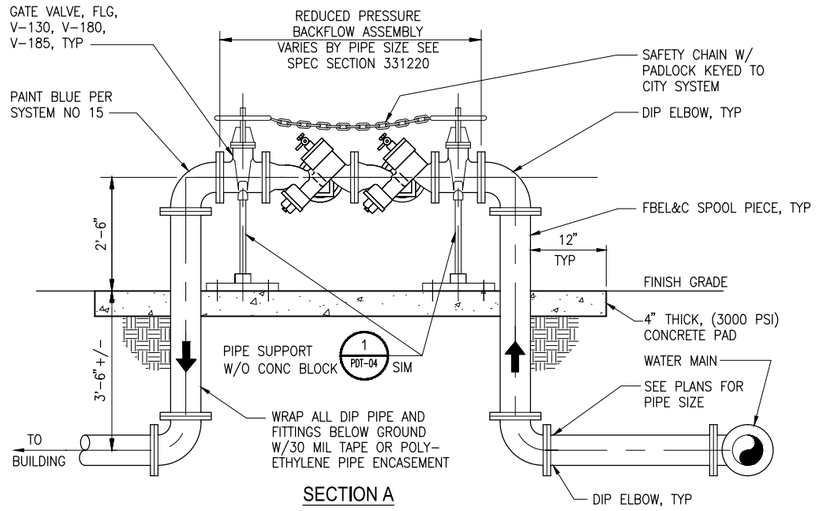

SECTION A

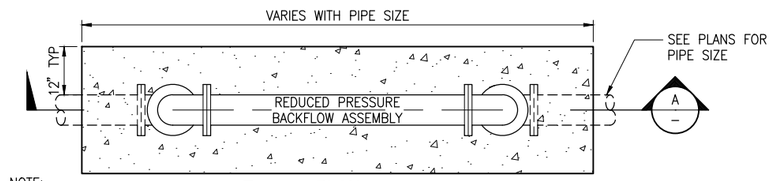

PLAN

NOTE:
PROVIDE THRUST BLOCKING SEE 2 PDT-05

RP BACKFLOW SYSTEM (2 / -)

SCALE:

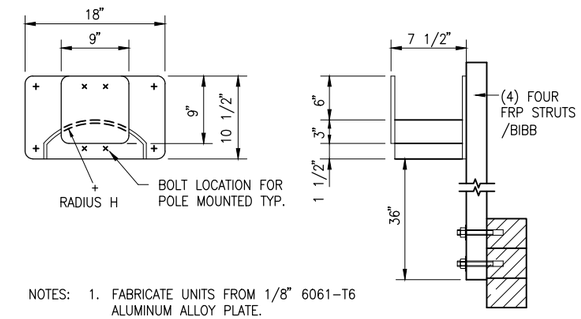

NOTES:
1. FABRICATE UNITS FROM 1/8" 6061-T6 ALUMINUM ALLOY PLATE. USE TYPE A U.O.N. ON DRAWINGS
2. PROVIDE EA. HOSE RACK W/ 50' OF HOSE
3. ATTACH BIBB TO FRP STRUTS WITH 2 3/8" TYPE 316 SST BOLTS, NUTS AND WASHER.
4. ATTACH TO CONCRETE BLOCK WALL WITH 4-3/8" SST STUD TYPE WEDGE ANCHORS.

WALL MOUNTED HOSE RACK (3 / -)

SCALE: N.T.S.

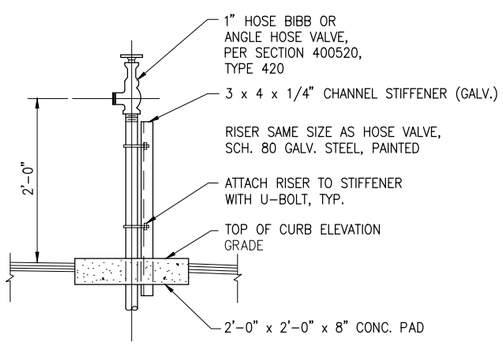

NOTE:
WALL MOUNTED HOSE RACK SHALL BE PROVIDED AT ALL HOSE BIBB LOCATIONS SEE DETAIL 3 / -

HOSE BIBB (4 / -)

SCALE: N.T.S.

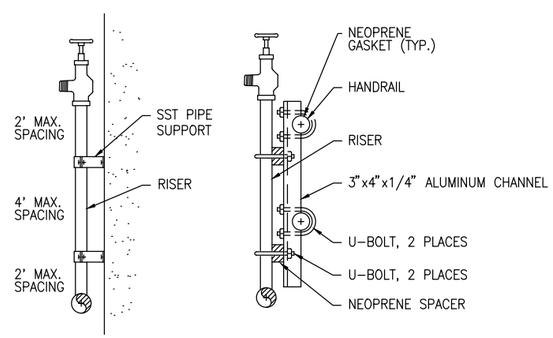

WALL MOUNTED | HANDRAIL MOUNTED

ALTERNATE HOSE VALVES HYDRANT MOUNTING (5 / -)

SCALE: NTS ALL SUPPORT SST MATERIAL

PRELIMINARY 30% SUBMITTAL

0 1/2 1
IF THIS BAR DOES NOT MEASURE 1" THEN DRAWING IS NOT TO FULL SCALE

REV	DATE	DESCRIPTION	APPR

PROJECT ENGINEER | REG NUMBER | EXP DATE

AECOM
1194 PACIFIC STREET, SUITE 204
SAN LUIS OBISPO, CA 93401
T 805.542.9840 F 805.542.9990
www.aecom.com

CITY OF EL PASO DE ROBLES
WATER TREATMENT PLANT PROJECT

MISCELLANEOUS DETAILS

DESIGNED:
DETAILED:
CHECKED:
APPROVED:
DATE: November 2012
AECOM PROJECT NO. 60264606
P.R. PROJECT NO.
CADD STDS. AECOM

PDT-02
SHEET - OF -

DWG: V:\PASO ROBLES\60264606-WTP\000 CAD\PLANSET\3-PROCESS\PDT-02.dwg Layout Name: Paper - Plotted by: Rodriguez, David Date: 11/28/2012 - 3:50 PM
XREFS: C-BD-PR IMAGES: CITY OF PASO LOGO_1.png -

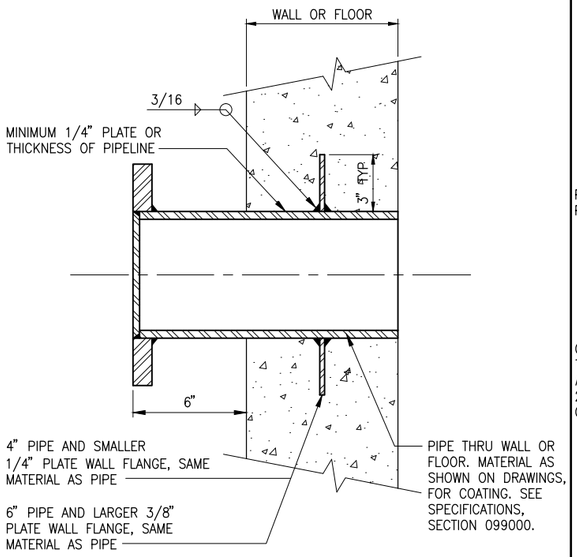

FABRICATED PIPE THIMBLE (1 / -)

SCALE: NTS

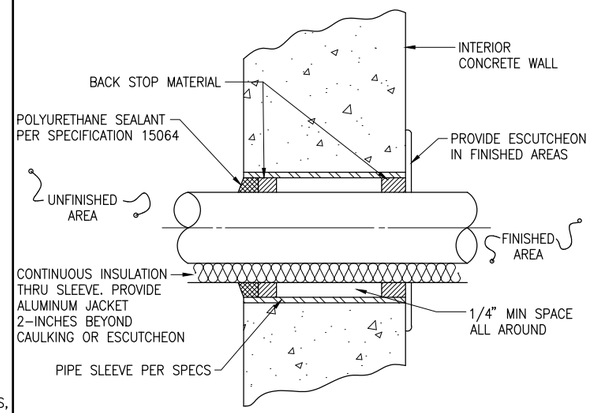

WALL PIPE PENETRATION (2 / -)

SCALE: NTS

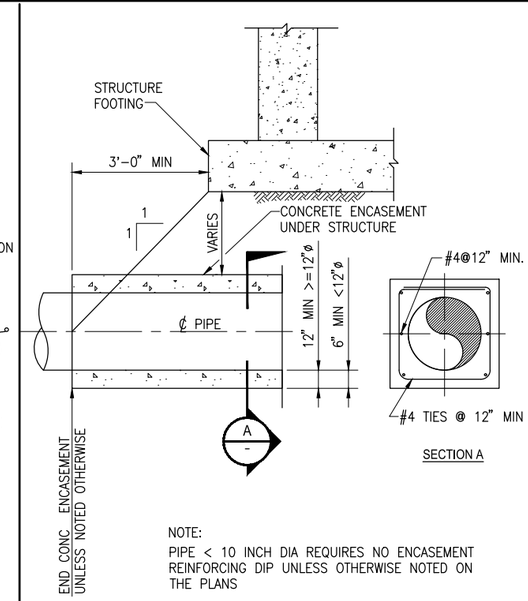

NOTE:
PIPE < 10 INCH DIA REQUIRES NO ENCASEMENT REINFORCING DIP UNLESS OTHERWISE NOTED ON THE PLANS

CONCRETE ENCASEMENT UNDER STRUCTURES (3 / -)

SCALE: NTS

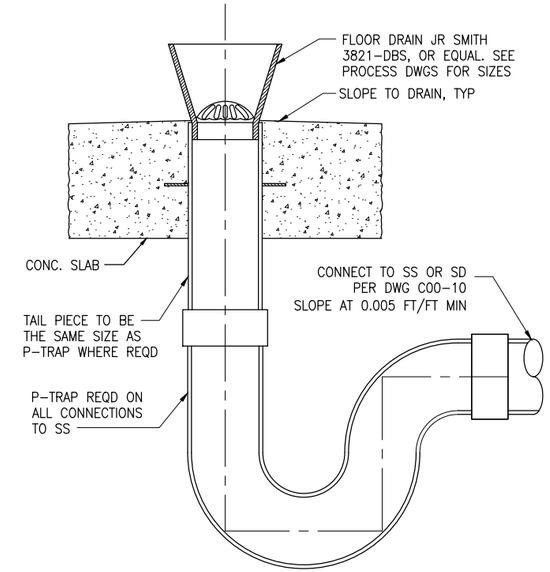

EQUIPMENT DRAIN WITH FUNNEL (4 / -)

SCALE: NTS

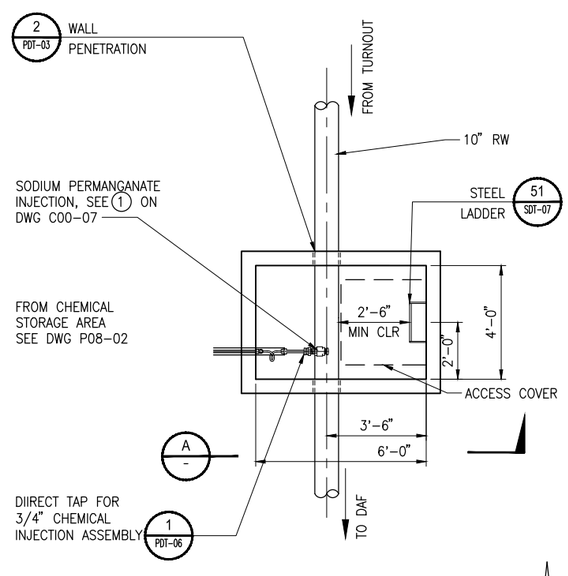

CHEMICAL INJECTION VAULT (6 / -)

SCALE: 3/8" = 1'-0"

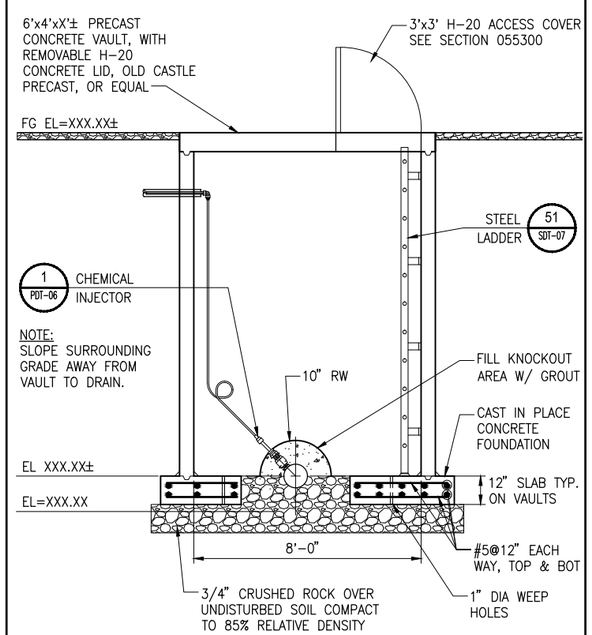

SECTION (A / -)

SCALE: 3/8" = 1'-0"

PRELIMINARY
30% SUBMITTAL

0 1/2 1
IF THIS BAR DOES NOT MEASURE 1" THEN DRAWING IS NOT TO FULL SCALE

REV	DATE	DESCRIPTION	APPR

PROJECT ENGINEER | REG NUMBER | EXP DATE

AECOM
AECOM
1194 PACIFIC STREET, SUITE 204
SAN LUIS OBISPO, CA 93401
T 805.542.9840 F 805.542.9990
www.aecom.com

CITY OF EL PASO DE ROBLES
WATER TREATMENT PLANT PROJECT

PIPE ENCASEMENT, PENETRATIONS AND FLOOR DRAIN DETAILS

DESIGNED:
DETAILED:
CHECKED:
APPROVED:
DATE: November 2012
AECOM PROJECT NO. 60264606
P.R. PROJECT NO.
CADD STDS. AECOM

PDT-03
SHEET
- OF -

DWG: V:\PASO ROBLES\60264606-WTP\000 CAD\PLANSET\3-PROCESS\PDT-03.dwg Layout Name: PAPER - Plotted by: Rodriguez, David Date: 11/28/2012 - 3:51 PM
XREFS: G-BD-PR IMAGES: CITY OF PASO LOGO_1.png -

PIPE DIA (IN)	'A'	'B'	'C'	'D'	'E'	
					MIN	MAX
2 1/2	2 1/2	3 1/2	9	1 1/2	8	13
3	2 1/2	3 3/4	9	1 1/2	8 1/4	13 1/4
3 1/2	2 1/2	4	9	1 1/2	8 1/2	13 1/2
4	3	4 1/4	9	2 1/2	9 1/4	14
5	3	4 7/8	9	2 1/2	10	14 3/4
6	3	5 1/2	9	2 1/2	10 1/2	15 1/4
8	3	6 7/8	9	2 1/2	11 3/4	16 1/2
10	3	8 1/2	9	2 1/2	13 1/2	18 1/4
12	3	9 15/16	9	2 1/2	15	19 3/4
14	4	10 15/16	11	3	16 1/4	20 3/4
16	4	12 3/8	11	3	17 3/4	22 1/4
18	6	13 7/8	13 1/2	3 1/2	19 1/2	24
20	6	15 3/8	13 1/2	3 1/2	21	25 1/2
24	6	17 15/16	13 1/2	4	23 3/4	28 1/4
30	6	21 5/16	17 1/2	4	22	26 3/4

1. PROVIDE HALF ROUND RIGID INSULATION & INSULATION PROTECTION SHIELD, SIMILAR TO GRINNELL FIG 167 OR B-LINE B-3151, WHEN PIPING IS INSULATED
2. PROVIDE NEOPRENE WAFFLE ISOLATION PAD SIMILAR TO MASON TYPE 'W' OR KORFUND KORPAD 40, UNDER SUPPORT FOOT WHEN PIPING IS ISOLATED OR SUPPORT IS ADJACENT TO MECHANICAL EQUIPMENT
3. SEE TABLE FOR BASE, HEIGHT, & FLANGE DIMENSIONS

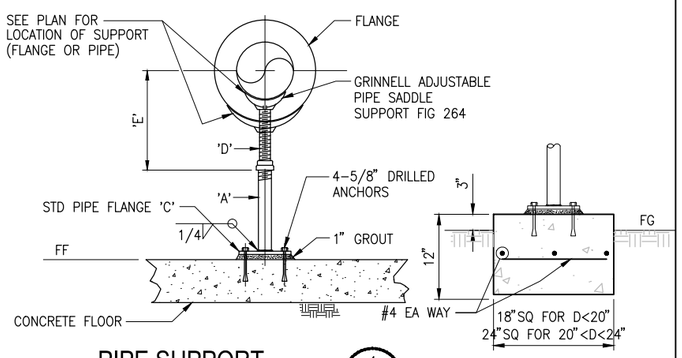

PIPE SUPPORT (1)

SCALE: NONE

CONCRETE BASE IF SUPPORT IS LOCATED OFF OF A SLAB

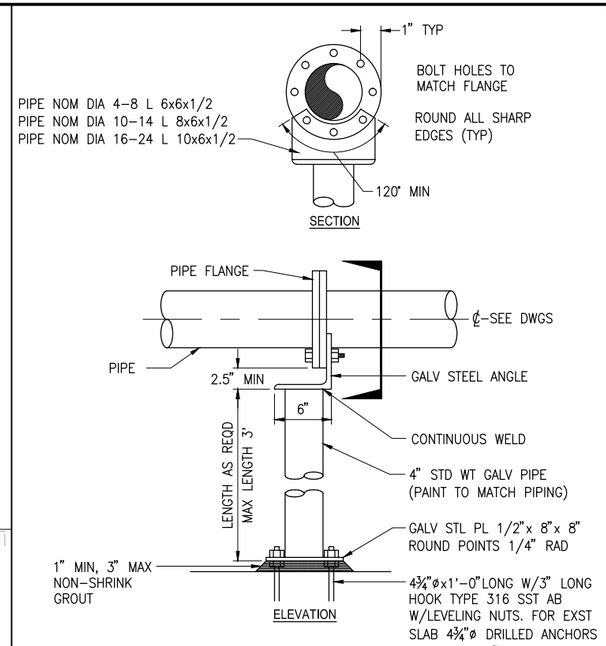

PIPE SUPPORT (2)

SCALE: NONE

PIPE HANGER DIMENSIONS

PIPE SIZE	ROD SIZE "A"	MAX. SPACING
3/8"	1/2"	4'
1 1/2"-1"	1/2"	6'
1 1/4"-2"	1/2"	6'
2 1/2"-3"	1/2"	6'

AS REQUIRED PROVIDE LATERAL BRACING

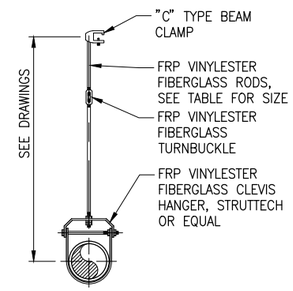

CLEVIS TYPE PIPE HANGER (3)

SCALE: N.T.S.

NOTES:
1. SEE PLANS FOR NUMBER AND MATERIAL OF PIPES
2. WHEN INSTALLING PIPES 4-INCHES AND LARGER, PROVIDE SIDE BRACKET PER DETAIL 400764-021

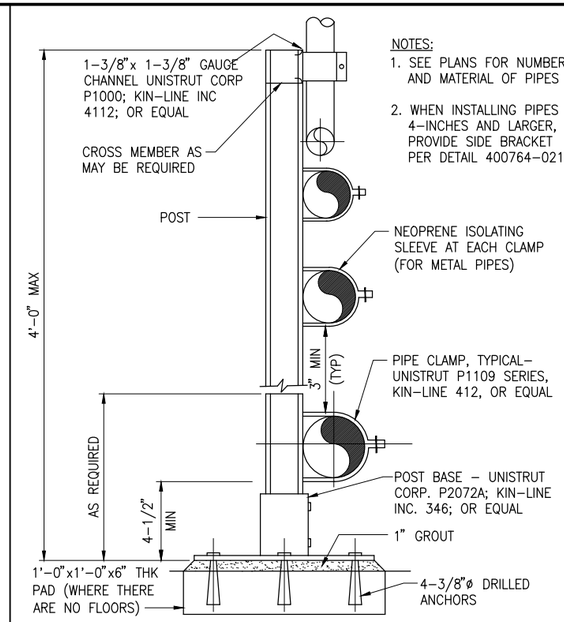

SINGLE OR STACKED POST PIPE SUPPORT (4)

SCALE: NONE

NOTES:
1. SEE PLANS FOR NUMBER AND MATERIAL OF PIPES.
2. FOR INSTALLATION REQUIRING A BRACKET LONGER THAN 18", USE UNISTRUT 2540 SERIES, KIN-LINE 323, OR EQUAL UP TO 36".

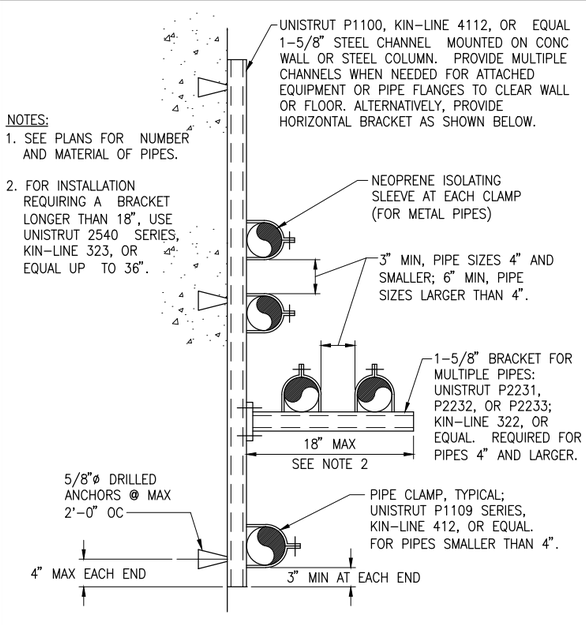

SINGLE OR STACKED WALL PIPE SUPPORT (5)

SCALE: NONE

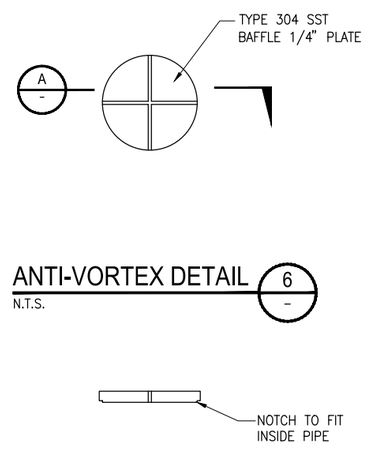

ANTI-VORTEX DETAIL (6)

N.T.S.

SECTION (A)

N.T.S.

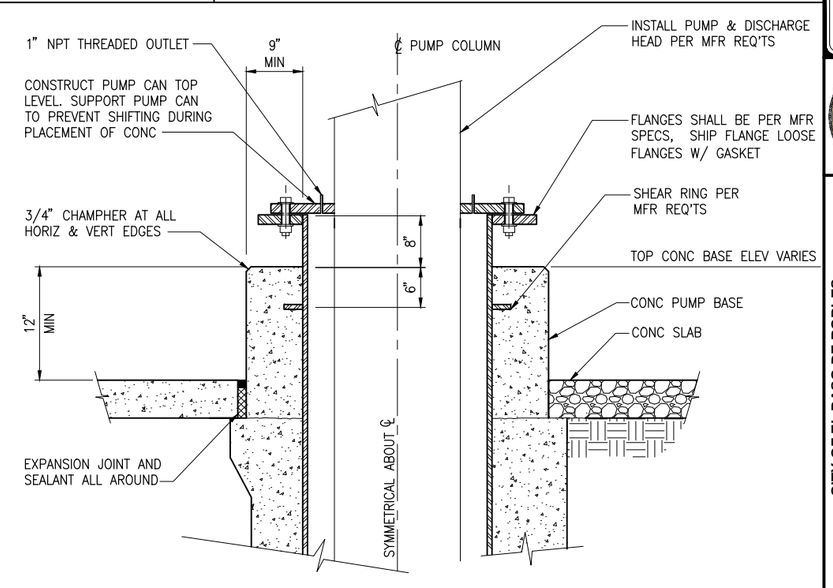

PUMP BASE DETAIL (7)

SCALE: 3/8" = 1'-0"

PRELIMINARY 30% SUBMITTAL

0 1/2 1

IF THIS BAR DOES NOT MEASURE 1" THEN DRAWING IS NOT TO FULL SCALE

REV	DATE	DESCRIPTION	APPR
1			
2			
3			
4			

PROJECT ENGINEER | REG NUMBER | EXP DATE

AECOM

AECOM
1194 PACIFIC STREET, SUITE 204
SAN LUIS OBISPO, CA 93401
T 805.542.9840 F 805.542.9990
www.aecom.com

CITY OF EL PASO DE ROBLES

CITY OF EL PASO DE ROBLES
WATER TREATMENT PLANT PROJECT

PIPE SUPPORTS AND HANGER DETAILS

DESIGNED:
DETAILED:
CHECKED:
APPROVED:
DATE: November 2012
AECOM PROJECT NO. 60264606
P.R. PROJECT NO.
CADD STDS. AECOM

PDT-04
SHEET OF -

DWG: V:\PASO ROBLES\60264606-WTP\000 CAD\PLANSET\3-PROCESS\PDT-04.dwg Layout Name: Paper - Plotted by: Rodriguez, David Date: 11/28/2012 - 3:51 PM
XREFS: C-BD-PR IMAGES: CITY OF PASO LOGO_1.png -

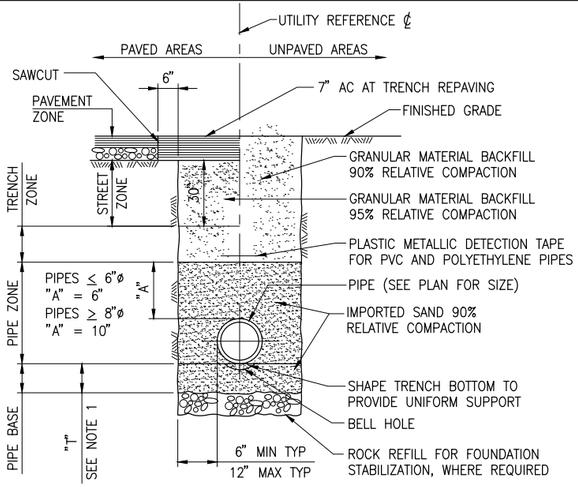

NOTES

1. FOR SIZES 18" DIAMETER AND GREATER, T=6 INCHES. FOR SIZES 16" DIAMETER AND LESS, T=4 INCHES.
2. TRENCH WALL SHOWN VERTICAL FOR CLARITY, EXCAVATE PER OSHA/STATE REQUIREMENTS.
3. USE THE SAME DETAIL FOR BUILDING SERVICES.

TRENCH (1)

SCALE: NONE

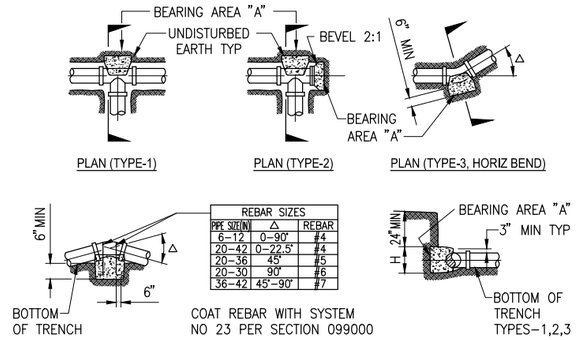

REBAR SIZES		
PIPE SIZE (IN)	Δ	REBAR
6–12	0–90°	#4
20–42	0–22.5°	#4
20–36	45°	#5
20–30	90°	#6
36–42	45°–90°	#7

COAT REBAR WITH SYSTEM NO 23 PER SECTION 099000

NOTES:

1. BASED ON OD OF PIPE AT GASKET
2. CHECK SIZE OF FITTING TO VERIFY AVAILABLE AREA FOR BEARING ON CONCRETE
3. DO NOT USE THIS DETAIL WITH VERTICAL THRUST BLOCKS FOR PIPE SIZES AND BENDS NOT SHOWN IN THE TABLES
4. TEST PRESS = 150 PSI SOIL BRG PRESS = 1500 LB/SF

PIPE DIA (IN)	BEARING AREA "A" (SF) TEE OR DEAD-END	Δ=11.25°	Δ=22.5°	Δ=45°	Δ=90°	VERTICAL THRUST BLOCK VOL OF CONCRETE (CY) Δ=11.25°	Δ=22.5°	Δ=45°	Δ=90°
6	3.8	1.1	1.5	2.9	5.3	0.3	0.5	1.1	2.0
8	6.5	1.3	2.5	5.0	9.2	0.5	0.9	1.8	3.4
10	10.8	2.1	4.2	8.2	15.2	0.8	1.6	3.0	5.6
12	15.2	3.0	5.9	11.6	21.5	1.1	2.2	4.3	7.9
14	20.6	4.0	8.0	15.8	29.1	1.5	3.0	5.8	10.8
16	26.9	5.3	10.5	20.6	38.0	2.0	3.9	7.6	14.1
18	34.3	6.7	13.4	26.3	48.5	2.5	5.0	9.7	—
20	42.6	8.4	16.6	32.6	60.3	3.1	6.2	12.1	—
24	61.6	12.1	24.0	47.1	87.1	4.5	8.9	—	—

TYPICAL THRUST BLOCKS (2)

SCALE: NONE

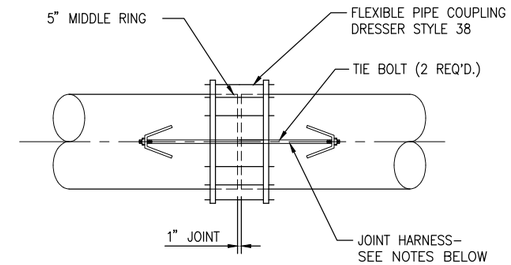

NOTES:

1. TIE ROD MATERIAL SHALL BE ASTM A–193, GRADE B7.
2. LUG MATERIAL SHALL BE ASTM 283, GRADE B, OR ASTM A–285, GRADE C.
3. NUMBER AND SIZE OF RODS SHALL BE AS SHOWN IN AWWA MANUAL M11, TABLE 13–6, FOR PIPES 18 INCHES AND LARGER.
4. DIMENSIONS OF LUGS SHALL BE AS SHOWN IN AWWA MANUAL M11, TABLE 13–7, EXCEPT MINIMUM THICKNESS SHALL BE 3/8 INCH.
5. SEE PLANS FOR PRESSURE RATING TO BE USED WITH MANUAL M11 DESCRIBED HEREIN. IF NO PRESSURE RATING IS SHOWN, USE 150 PSI.
6. PIPES 16 INCHES AND SMALLER SHALL HAVE TWO TIE RODS, SIZE AS SHOWN IN AWWA MANUAL M11, FIGURE 13–6. LUG DIMENSION SHALL BE AS SHOWN IN M11, TABLE 13–7, EXCEPT A MINIMUM THICKNESS SHALL BE 3/8 INCH.

FLEXIBLE PIPE COUPLING (3)

SCALE: NONE

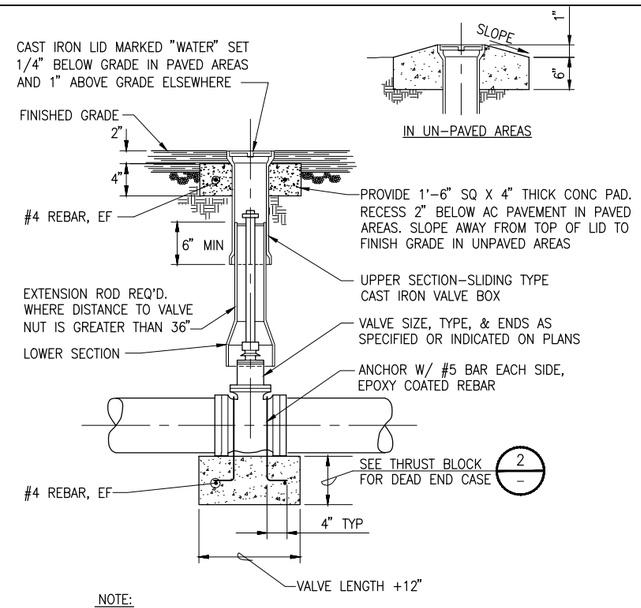

NOTE:

WHERE VALVE IS BOLTED TO A FLANGED FITTING WITH THRUST BLOCKING, #5 REBARS MAY BE OMITTED

BURIED VALVE (4)

SCALE: NONE

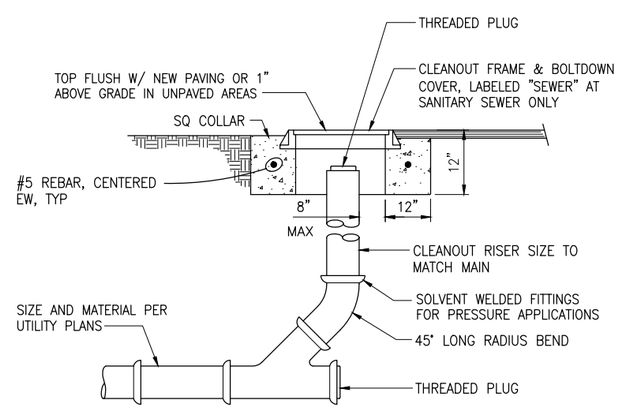

SEWER CLEANOUT (5)

SCALE: NONE

NOTE: THRUST BLOCKS SHOWN ON DETAILS 2 & 4 WILL NOT BE USED IF RESTRAINED JOINTS ARE USED ON ALL PRESSURE PIPE.

PRELIMINARY 30% SUBMITTAL

0 1/2 1
IF THIS BAR DOES NOT MEASURE 1" THEN DRAWING IS NOT TO FULL SCALE

REV	DATE	DESCRIPTION	APPR

PROJECT ENGINEER | REG NUMBER | EXP DATE

AECOM

AECOM
1194 PACIFIC STREET, SUITE 204
SAN LUIS OBISPO, CA 93401
T 805.542.9840 F 805.542.9990
www.aecom.com

CITY OF EL PASO DE ROBLES
WATER TREATMENT PLANT PROJECT

PIPING AND TRENCHING DETAILS

DESIGNED:
DETAILED:
CHECKED:
APPROVED:
DATE: November 2012
AECOM PROJECT NO. 60264606
P.R. PROJECT NO.
CADD STDS. AECOM

PDT-05
SHEET OF -

DWG: V:\PASO ROBLES\60264606-WTP\000 CAD\PLANSET\3-PROCESS\PDT-05.dwg Layout Name: Paper – Plotted by: Rodriguez, David Date: 11/28/2012 – 3:51 PM
XREFS: G-BD-PR IMAGES: CITY OF PASO LOGO_1.png –

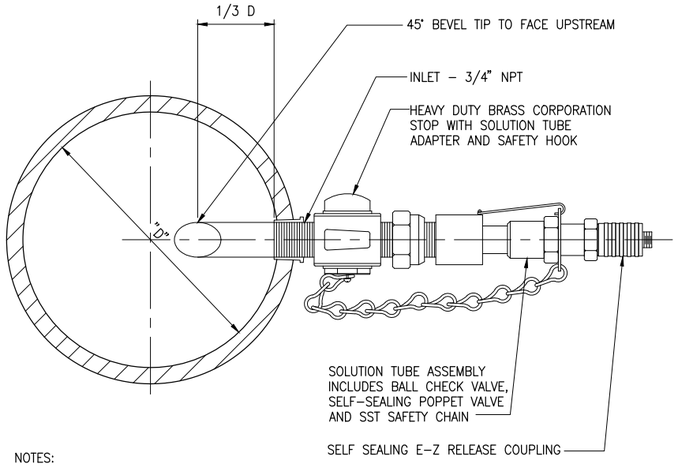

NOTES:

1. REFER TO SITE PIPING DWGS FOR "D"
2. INJECTION QUILL CONNECTION SHOWN HORIZONTAL FOR CLARITY. INSTALL AT 45° FROM VERTICAL
3. CHEMICAL INJECTION ASSEMBLIES WILL BE SAF-T-FLO MODEL EB-191, OR EQUAL.
4. SAMPLE TAPS WILL BE SAF-T-FLO MODEL EB-179 OR EQUAL.

CHEMICAL INJECTION AND SAMPLE TAP (1 / -)

SCALE: NONE

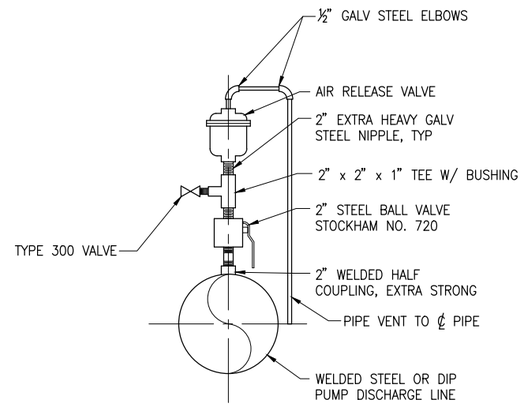

AIR RELEASE VALVE DETAIL (2 / -)

SCALE: NONE

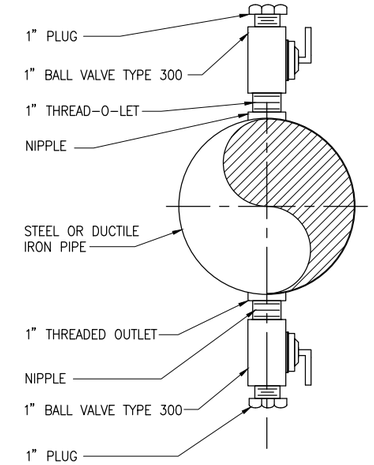

NOTE:

1. ALL PIPE AND FITTINGS SHALL BE SCH 40 BRASS

THREADED OUTLET (3 / -)

SCALE: NTS

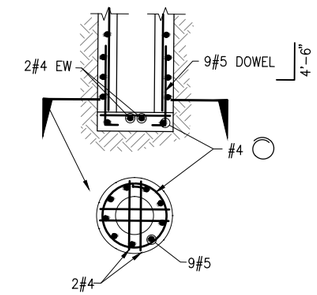

PUMP CAN REINFORCING (4 / -)

SCALE: NTS

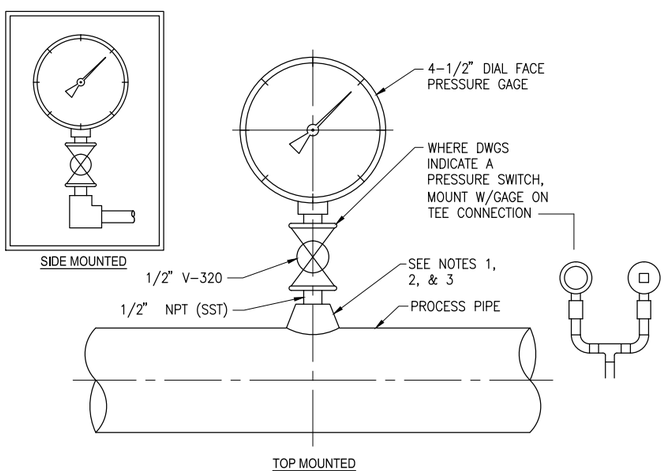

NOTES:

1. FOR STL, GALV & PVC 2-1/2" & SMALLER USE A BUSHING IN A TEE
2. FOR DI & FRP ALL SIZES, USE PIPE SADDLE W/BUSHING
3. FOR STL & SST PIPES 3" & LARGER, & PRESSURE VESSELS, USE THRED-O-LET AS SHOWN
4. PROVIDE SNUBBER FOR POSITIVE DISPLACEMENT PUMP INSTALLATIONS

PRESSURE GAUGE MOUNTING (5 / -)

SCALE: NONE

NOTES:

1. PLACE NON-INSULATED SIDE OF BOLT TOWARD VALVE
2. DO NOT APPLY METALLIC OR OTHER NON-INSULATING PAINTS TO INSULATING PARTS OR FLANGES
3. INSULATING SLEEVE TO BE 1/64" SHORTER THAN DISTANCE BETWEEN STEEL WASHERS WHEN BOLT IS FULLY TIGHTENED
4. COAT WITH COLD APPLIED COAL TAR MASTIC AFTER ASSEMBLING JOINT AND WRAP WITH A BUTYL RUBBER ADHESIVE, POLYETHLENE BACKED TAPE

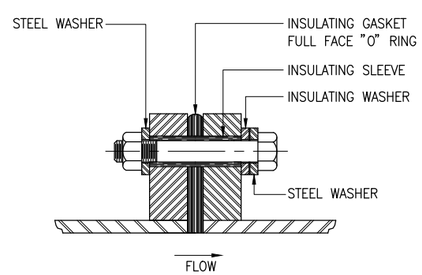

INSULATED FLANGE (6 / -)

SCALE: NONE

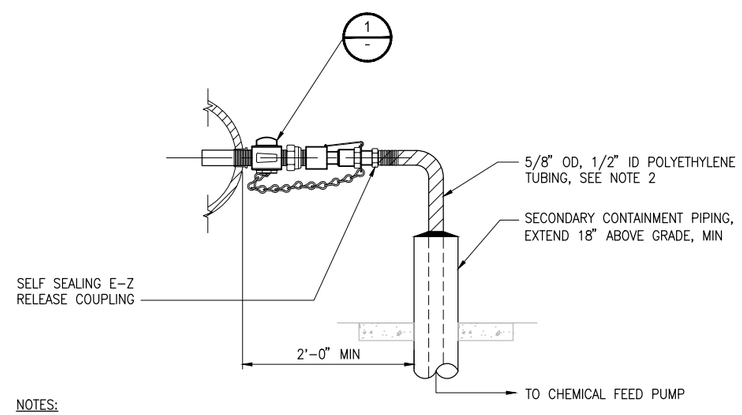

NOTES:

1. AT SAMPLING LOCATIONS INSTALL CHAMFERED SAMPLING TUBE WITH OPENING FACING UPSTREAM.
2. TRANSITION FROM SECONDARY CONTAINED PIPING TO PE TUBING. PROVIDE SUFFICIENT EXTRA TUBING LENGTH TO ALLOW FOR REMOVAL OF SOLUTION TUBE ASSEMBLY.

CHEMICAL FEED/SAMPLING CONNECTION (7 / -)

SCALE: NOT TO SCALE

PRELIMINARY 30% SUBMITTAL

0 1/2 1

IF THIS BAR DOES NOT MEASURE 1" THEN DRAWING IS NOT TO FULL SCALE

REV	DATE	DESCRIPTION	APPR
1			
2			
3			
4			

PROJECT ENGINEER | REG NUMBER | EXP DATE

AECOM
AECOM
1194 PACIFIC STREET, SUITE 204
SAN LUIS OBISPO, CA 93401
T 805.542.9840 F 805.542.9990
www.aecom.com

CITY OF EL PASO DE ROBLES
WATER TREATMENT PLANT PROJECT

MISCELLANEOUS DETAILS

DESIGNED:
DETAILED:
CHECKED:
APPROVED:
DATE: November 2012
AECOM PROJECT NO. 60264606
P.R. PROJECT NO.
CADD STDS. AECOM

PDT-06
SHEET OF -

DWG: V:\PASO ROBLES\60264606-WTP\000 CAD\PLANSET\3-PROCESS\PDT-06.dwg Layout Name: Paper – Plotted by: Rodriguez, David Date: 11/28/2012 – 3:51 PM
XREFS: G-BD-PR IMAGES: CITY OF PASO LOGO_1.png –

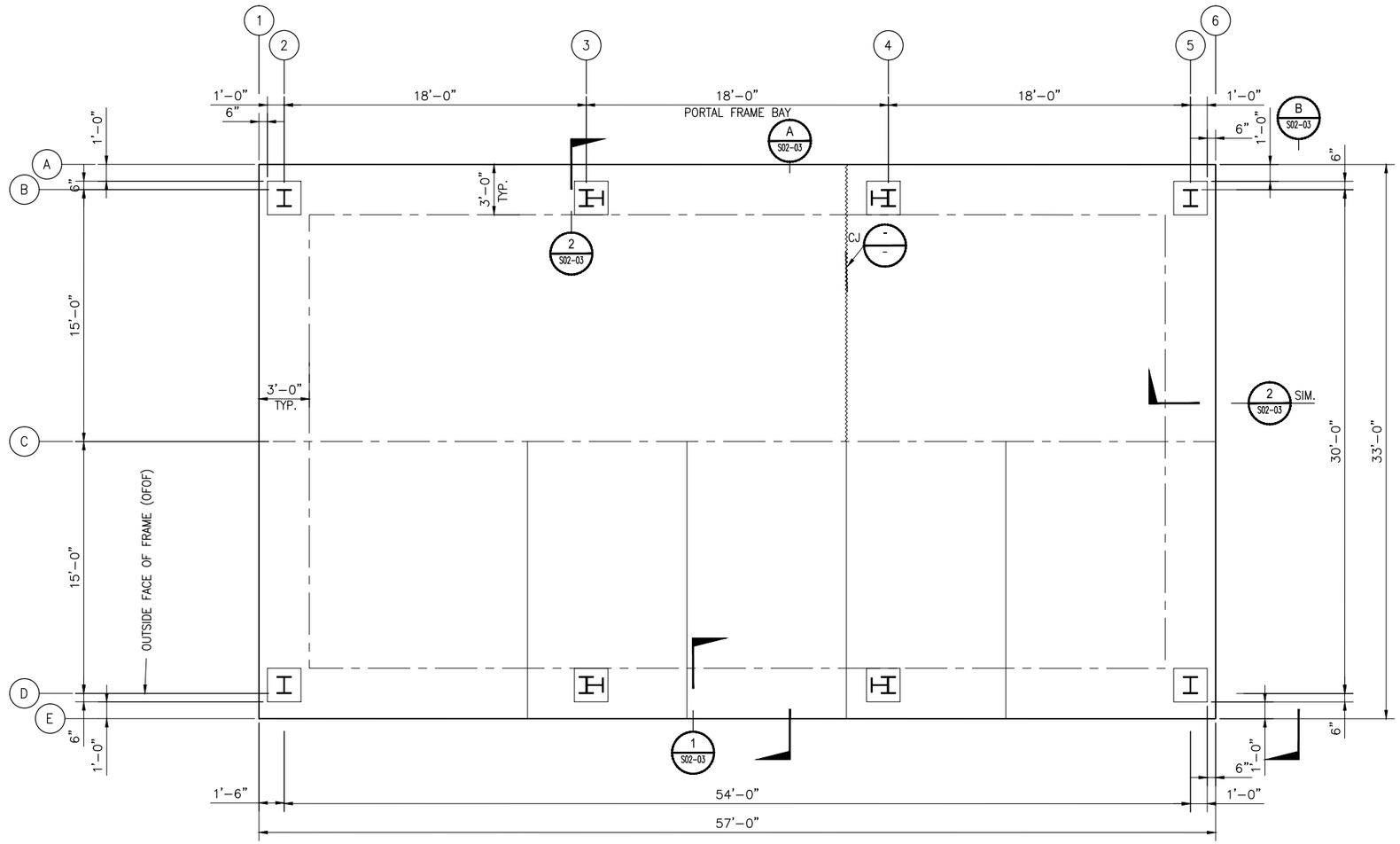

DAF FOUNDATION PLAN

SCALE: 1/4" = 1'-0"

1
-

PRELIMINARY
30% SUBMITTAL

0 1/2 1
IF THIS BAR DOES NOT MEASURE 1" THEN DRAWING IS NOT TO FULL SCALE

REV	DATE	DESCRIPTION	APPR
1			
2			
3			
4			

PROJECT ENGINEER | REG NUMBER | EXP DATE

AECOM
AECOM
1194 PACIFIC STREET, SUITE 204
SAN LUIS OBISPO, CA 93401
T 805.542.9840 F 805.542.9990
www.aecom.com

CITY OF EL PASO DE ROBLES
INCORPORATED 1889

CITY OF EL PASO DE ROBLES
WATER TREATMENT PLANT PROJECT

DAF SYSTEM FOUNDATION PLAN

DESIGNED:
DETAILED:
CHECKED:
APPROVED:
DATE: November 2012
AECOM PROJECT NO. 60264606
P.R. PROJECT NO.
CADD STDS. AECOM

S02-01
SHEET
- OF -

DWG: V:\PASO ROBLES\60264606-WTP\000 CAD\PLANSET\4-STRUCT\S02-01.dwg Layout Name: Layout1 - Plotted by: Rodriguez, David Date: 11/28/2012 - 4:34 PM
XREFS: G-BD-PR IMAGES: CITY OF PASO LOGO_1.png -

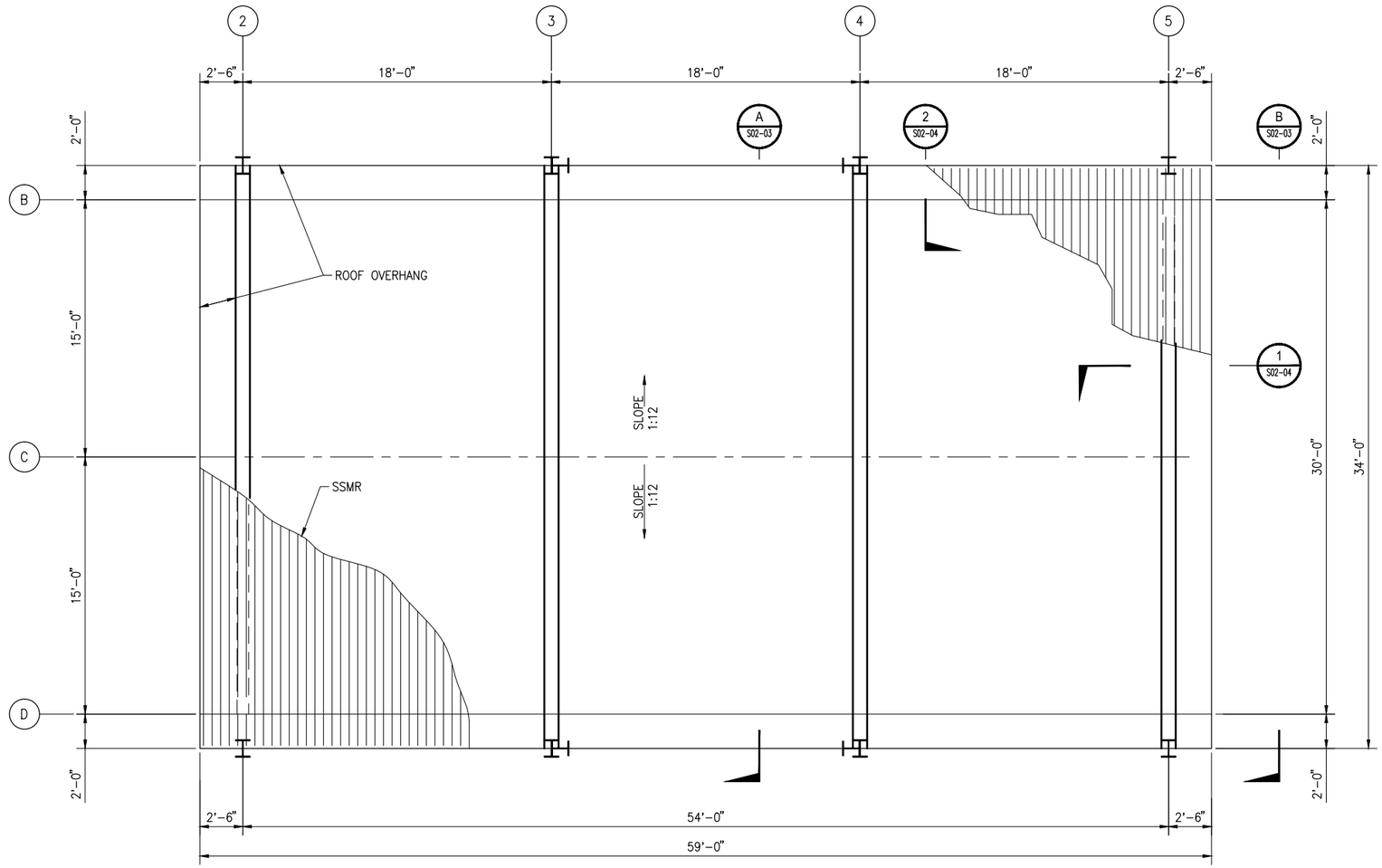

ROOF FRAMING PLAN (1)

SCALE: 1/4" = 1' - 0"

PRELIMINARY
30% SUBMITTAL

0 1/2 1
IF THIS BAR DOES NOT MEASURE 1" THEN DRAWING IS NOT TO FULL SCALE

REV	DATE	DESCRIPTION	APPR

PROJECT ENGINEER | REG NUMBER | EXP DATE

AECOM
AECOM
1194 PACIFIC STREET, SUITE 204
SAN LUIS OBISPO, CA 93401
T 805.542.9840 F 805.542.9990
www.aecom.com

CITY OF EL PASO DE ROBLES
WATER TREATMENT PLANT PROJECT

DAF SYSTEM ROOF FRAMING PLAN

DESIGNED:
DETAILED:
CHECKED:
APPROVED:
DATE: November 2012
AECOM PROJECT NO. 60264606
P.R. PROJECT NO.
CADD STDS. AECOM

S02-02
SHEET
- OF -

DWG: V:\PASO ROBLES\60264606-WTP\000 CAD\PLANSET\4-STRUCT\S02-02.dwg Layout Name: Boyle - Plotted by: Rodriguez, David Date: 11/28/2012 - 4:34 PM
XREFS: G-BD-PR IMAGES: CITY OF PASO LOGO_1.png -

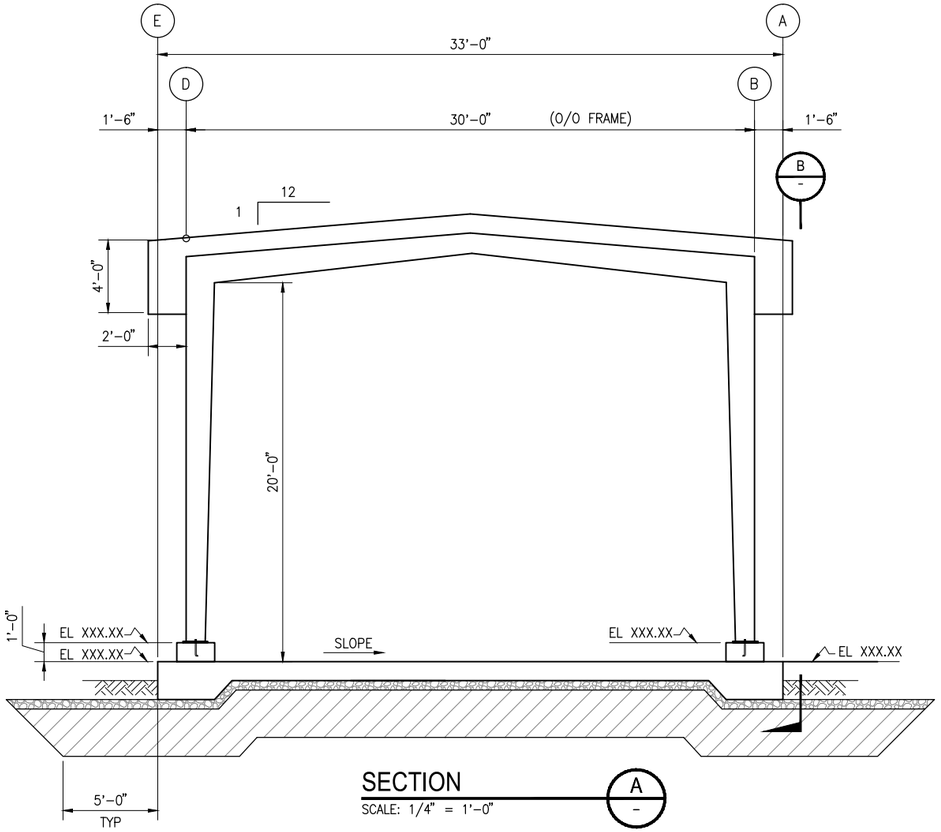

SECTION A

SCALE: 1/4" = 1'-0"

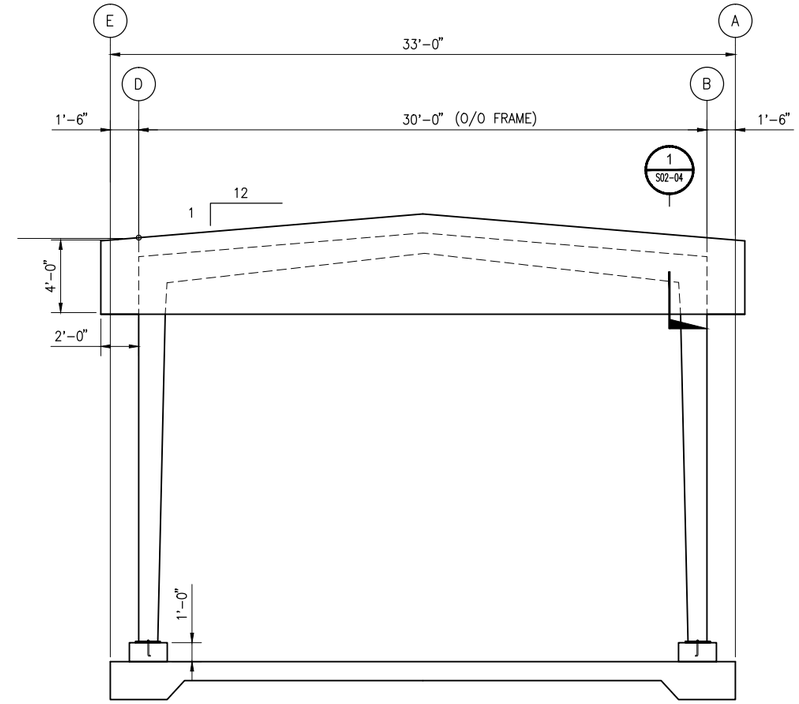

ELEVATION B

SCALE: 1/4" = 1'-0"

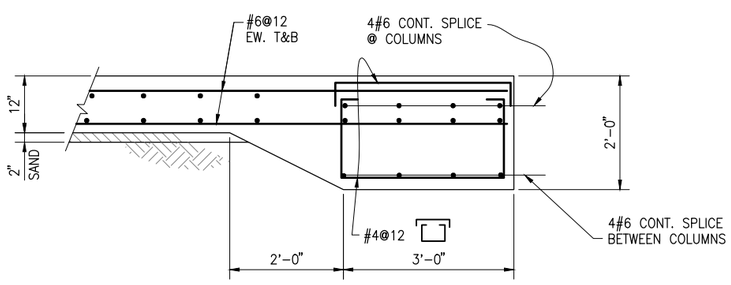

FOOTING DETAIL 1

SCALE: 3/4" = 1' - 0"

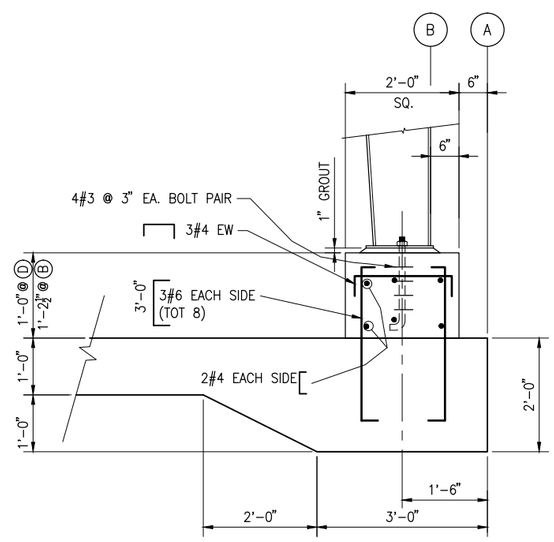

FOOTING DETAIL 2

SCALE: 3/4" = 1' - 0"

PRELIMINARY
30% SUBMITTAL

0 1/2 1
IF THIS BAR DOES NOT MEASURE 1" THEN DRAWING IS NOT TO FULL SCALE

REV	DATE	DESCRIPTION	APPR

PROJECT ENGINEER | REG NUMBER | EXP DATE

AECOM
AECOM
1194 PACIFIC STREET, SUITE 204
SAN LUIS OBISPO, CA 93401
T 805.542.9840 F 805.542.9990
www.aecom.com

CITY OF EL PASO DE ROBLES
INCORPORATED 1889

CITY OF EL PASO DE ROBLES
WATER TREATMENT PLANT PROJECT

DAF SYSTEM BUILDING SECTIONS

DESIGNED:
DETAILED:
CHECKED:
APPROVED:
DATE: November 2012
AECOM PROJECT NO. 60264606
P.R. PROJECT NO.
CADD STDS. AECOM

S02-03
SHEET
- OF -

DWG: V:\PASO ROBLES\60264606-WTP\000 CAD\PLANSET\4-STRUCT\S02-03.dwg Layout Name: Boyle (2) - Plotted by: Rodriguez, David Date: 11/28/2012 - 4:34 PM
XREFS: C-BD-PR IMAGES: CITY OF PASO LOGO_1.png -

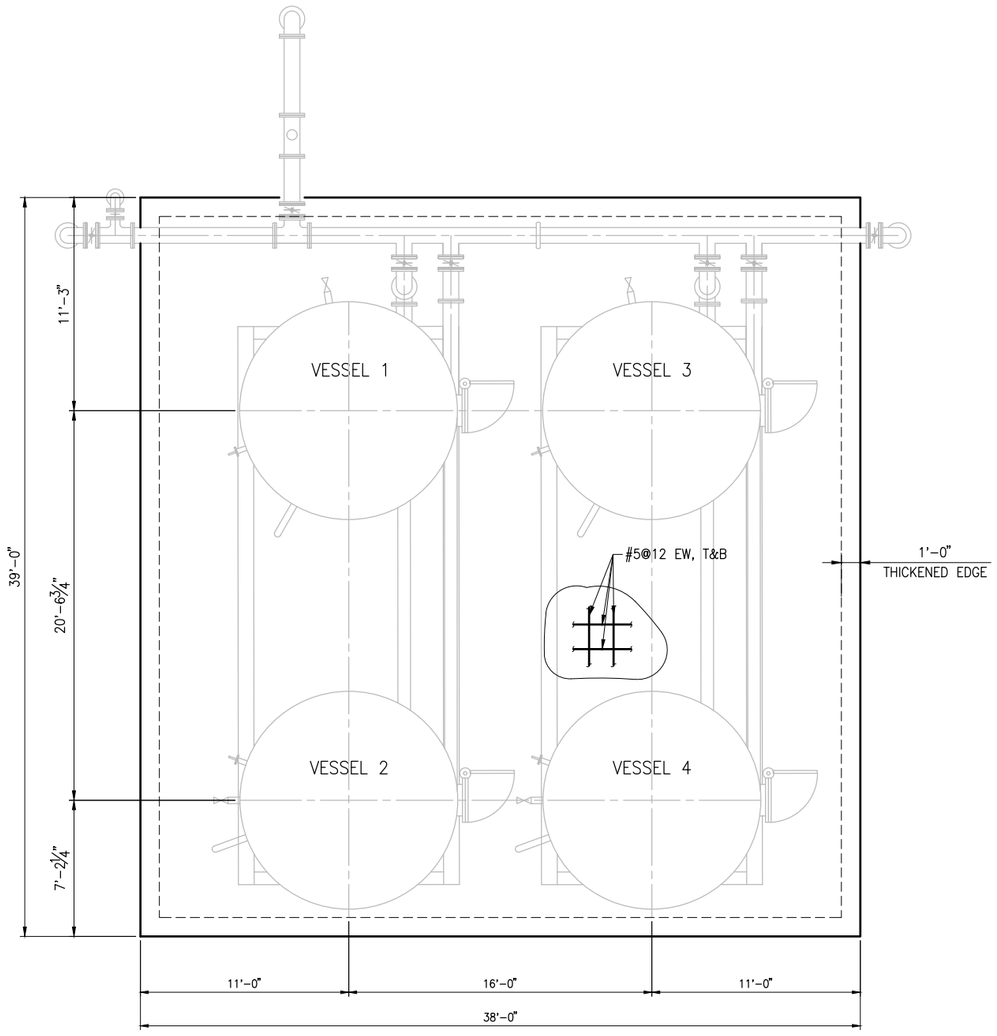

FOUNDATION PLAN

SCALE: 1/4" = 1'-0"

1 / -

NOTE:
SEE S05-02 FOR SLAB REINF.
AND VESSEL ANCHOR LAYOUT

PRELIMINARY
30% SUBMITTAL

0 1/2 1
IF THIS BAR DOES NOT MEASURE 1" THEN DRAWING IS NOT TO FULL SCALE

REV	DATE	DESCRIPTION	APPR
1			
2			
3			
4			

PROJECT ENGINEER | REG NUMBER | EXP DATE

AECOM
AECOM
1194 PACIFIC STREET, SUITE 204
SAN LUIS OBISPO, CA 93401
T 805.542.9840 F 805.542.9990
www.aecom.com

CITY OF EL PASO DE ROBLES
WATER TREATMENT PLANT PROJECT

GAC FOUNDATION PLAN

DESIGNED:
DETAILED:
CHECKED:
APPROVED:
DATE: November 2012
AECOM PROJECT NO. 60264606
P.R. PROJECT NO.
CADD STDS. AECOM

S05-01
SHEET
- OF -

DWG: V:\PASO ROBLES\60264606-WTP\000 CAD\PLANSET\4-STRUCT\S05-01.dwg Layout Name: Layout1 - Plotted by: Rodriguez, David Date: 11/28/2012 - 4:34 PM
XREFS: G-BD-PR - C-LP-PR - S-RP-06 - D-FP-CHEM-PIPING - S-NP-09 IMAGES: CITY OF PASO LOGO_1.png -

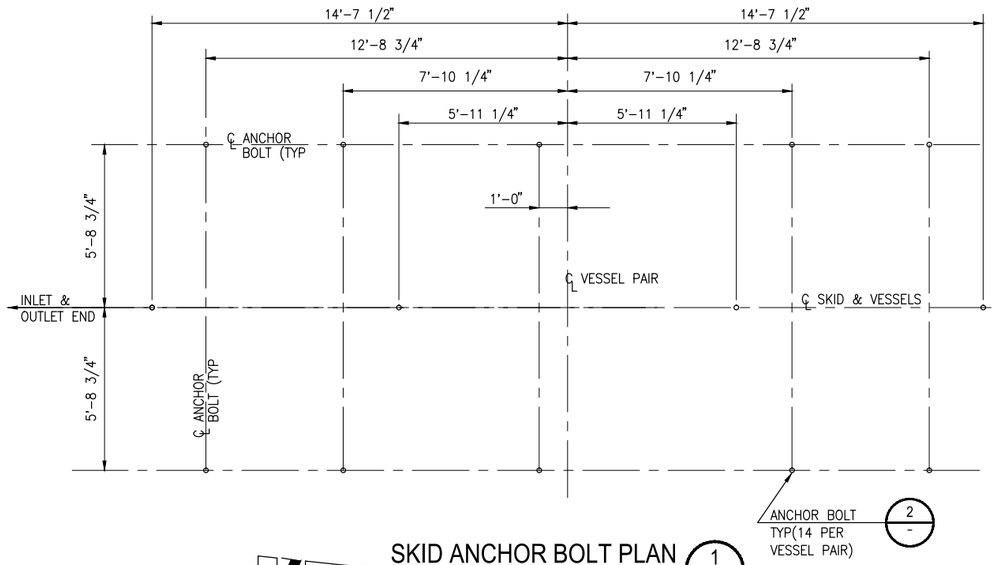

SKID ANCHOR BOLT PLAN (1 / -)

SCALE: 3/8" =1'-0"
(TYPICAL FOR EACH SKID)

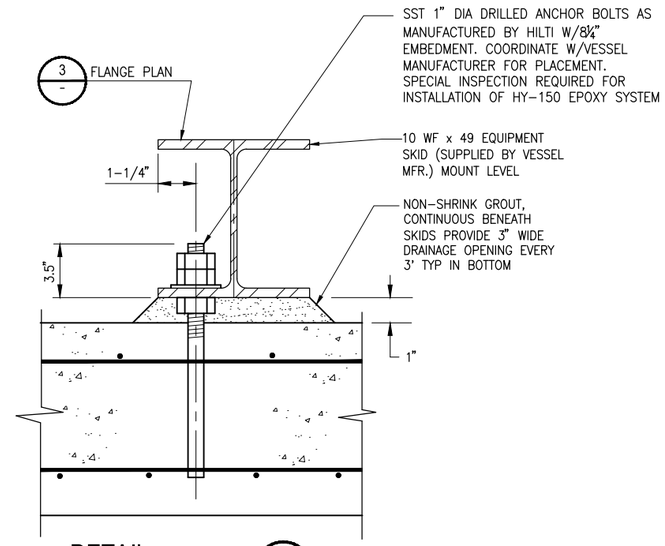

DETAIL (2 / -)

SCALE: NTS

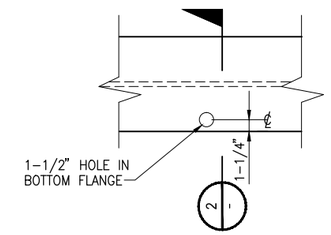

FLANGE PLAN (3 / -)

SCALE: NTS

NOTE:

1. CONTRACTOR SHALL OBTAIN LATEST MANUFACTURER'S DRAWINGS AND SHALL VERIFY LOCATIONS OF ANCHOR BOLTS. SEE DETAIL 2.
2. ONE SKID W/TWO VESSELS SHOWN,

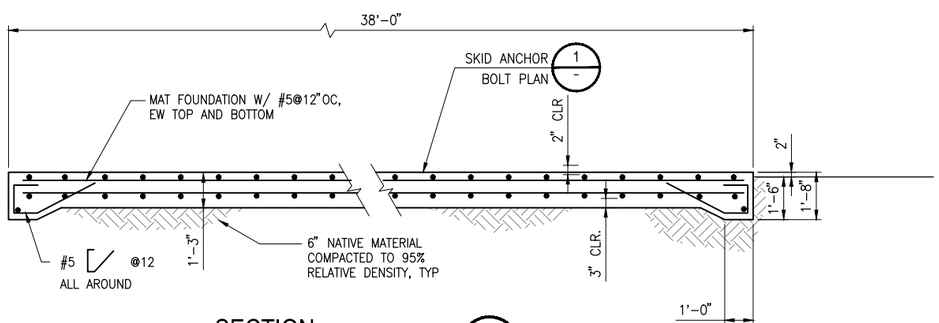

SECTION (A / -)

SCALE: NTS

PRELIMINARY
30% SUBMITTAL

0 1/2 1
IF THIS BAR DOES NOT MEASURE 1" THEN DRAWING IS NOT TO FULL SCALE

REV	DATE	DESCRIPTION	APPR

PROJECT ENGINEER | REG NUMBER | EXP DATE

AECOM
AECOM
1194 PACIFIC STREET, SUITE 204
SAN LUIS OBISPO, CA 93401
T 805.542.9840 F 805.542.9990
www.aecom.com

CITY OF EL PASO DE ROBLES
WATER TREATMENT PLANT PROJECT

GAC SLAB STRUCTURAL DETAILS

DESIGNED:
DETAILED:
CHECKED:
APPROVED:
DATE: November 2012
AECOM PROJECT NO. 60264606
P.R. PROJECT NO.
CADD STDS. AECOM

S05-02
SHEET
- OF -

DWG: V:\PASO ROBLES\60264606-WTP\000 CAD\PLANSET\4-STRUCT\S05-02.dwg Layout Name: Layout1 - Plotted by: Rodriguez, David Date: 11/28/2012 - 4:34 PM
XREFS: C-BD-PR IMAGES: CITY OF PASO LOGO_1.png -

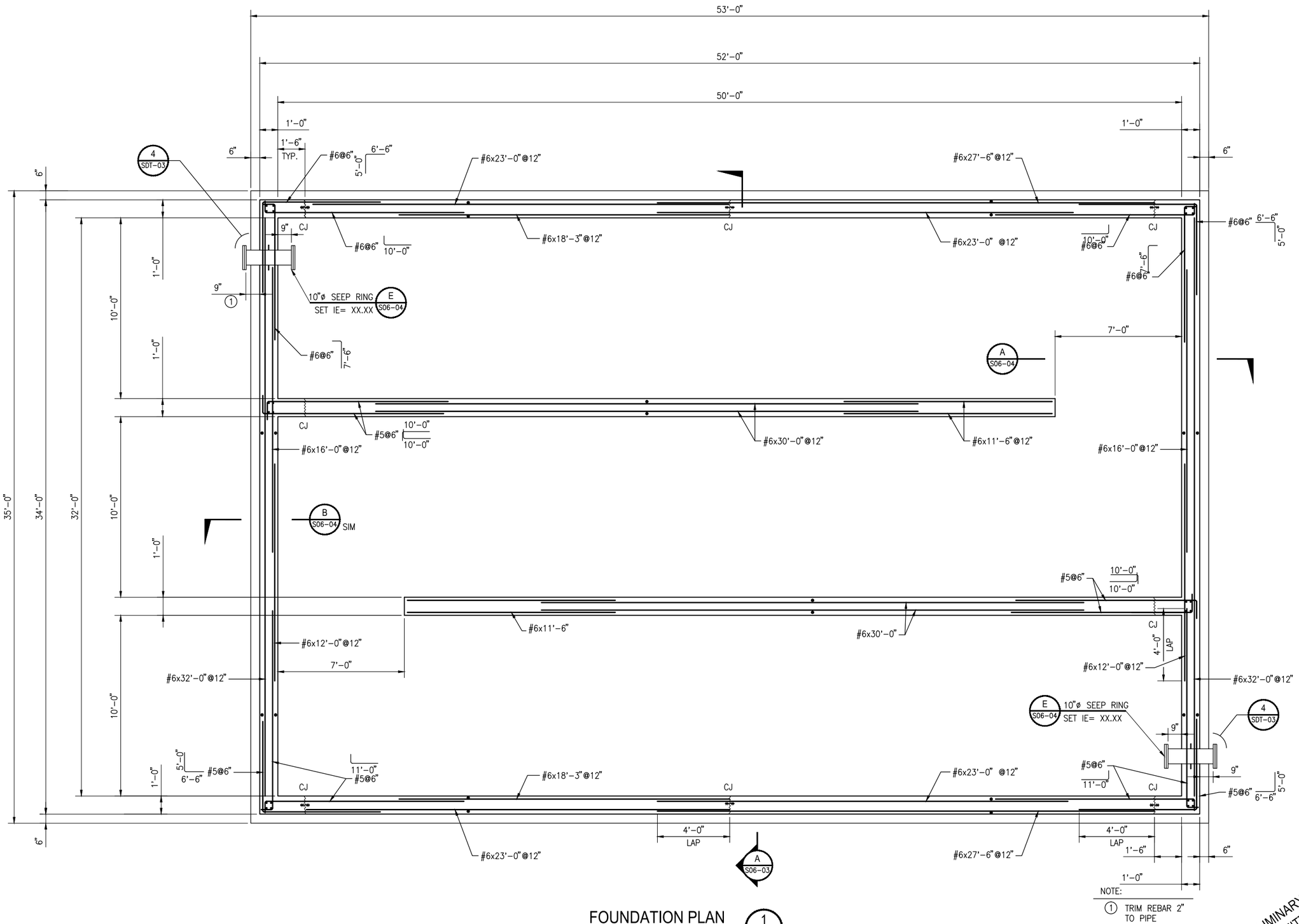

FOUNDATION PLAN

SCALE: 3/8" = 1' - 0"

1 / -

PRELIMINARY 30% SUBMITTAL

0 1/2 1

IF THIS BAR DOES NOT MEASURE 1" THEN DRAWING IS NOT TO FULL SCALE

REV	DATE	PROJECT ENGINEER	DESCRIPTION	REG NUMBER	EXP DATE	APPR
1						
2						
3						
4						

AECOM

AECOM
1194 PACIFIC STREET, SUITE 204
SAN LUIS OBISPO, CA 93401
T 805.542.9940 F 805.542.9990
www.aecom.com

CITY OF EL PASO DE ROBLES
WATER TREATMENT PLANT PROJECT

FOUNDATION PLAN,

DESIGNED:
DETAILED:
CHECKED:
APPROVED:
DATE: November 2012
AECOM PROJECT NO. 60264606
P.R. PROJECT NO.
CADD STDS. AECOM

S06-01
SHEET
OF -

DWG: V:\PASO ROBLES\60264606-WTP\000 CAD\PLANSET\4-STRUCT\S06-01.dwg Layout Name: S06-01 - Plotted by: Rodriguez, David Date: 11/28/2012 - 4:34 PM
XREFS: G-BD-PR - S-NP-06 - S-RP-06 IMAGES: CITY OF PASO LOGO_1.png -

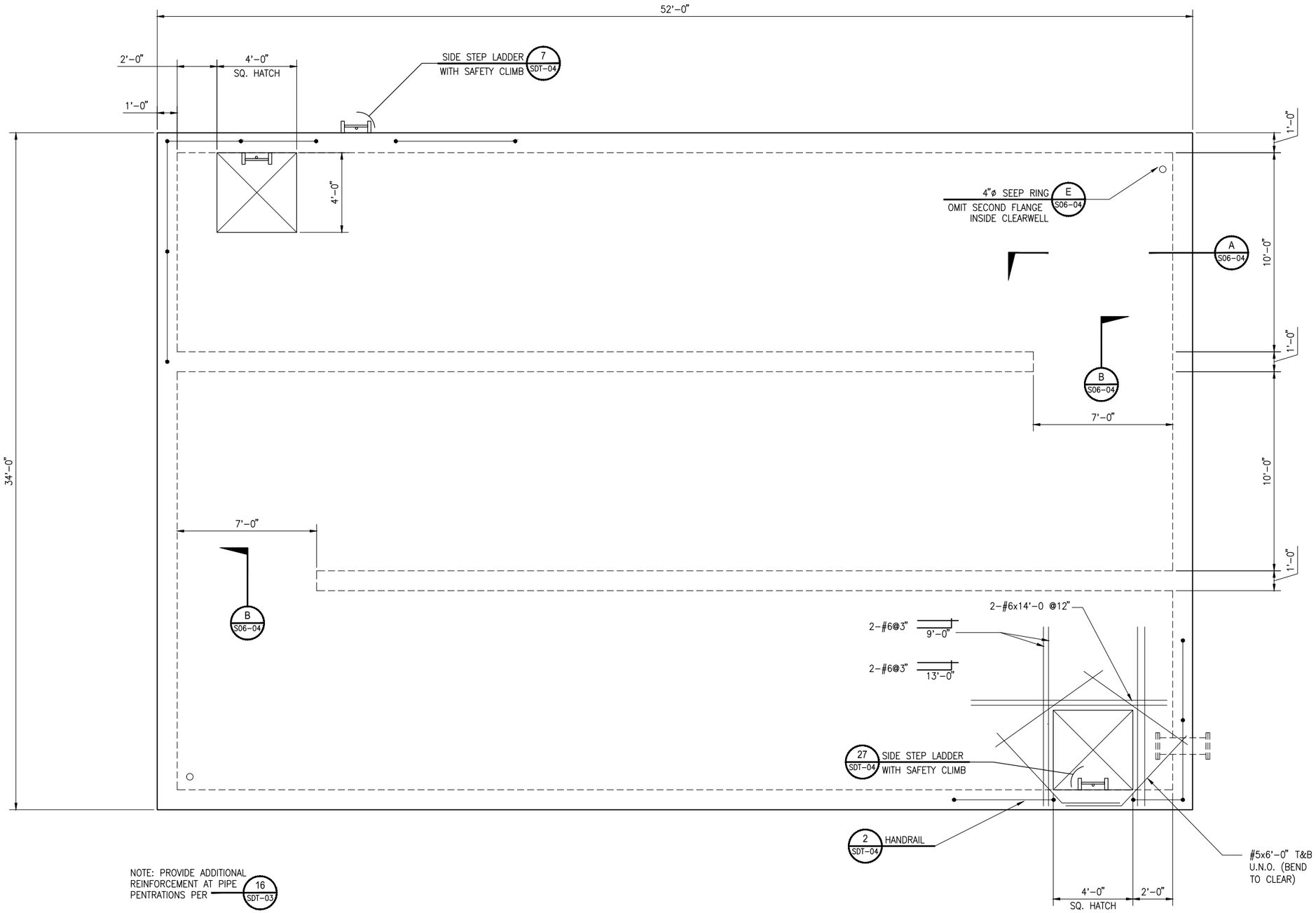

NOTE: PROVIDE ADDITIONAL REINFORCEMENT AT PIPE PENTRATIONS PER 16 SDT-03

DECK PLAN

SCALE: 3/8" = 1' - 0"

1 / -

PRELIMINARY
30% SUBMITTAL

0 1/2 1
IF THIS BAR DOES NOT MEASURE 1" THEN DRAWING IS NOT TO FULL SCALE

REV	DATE	DESCRIPTION	APPR

PROJECT ENGINEER | REG NUMBER | EXP DATE

AECOM
AECOM
1194 PACIFIC STREET, SUITE 204
SAN LUIS OBISPO, CA 93401
T 805.542.9840 F 805.542.9990
www.aecom.com

CITY OF EL PASO DE ROBLES
WATER TREATMENT PLANT PROJECT

DECK PLAN

DESIGNED:
DETAILED:
CHECKED:
APPROVED:
DATE: November 2012
AECOM PROJECT NO. 60264606
P.R. PROJECT NO.
CADD STDS. AECOM

S06-02
SHEET
OF -

DWG: V:\PASO ROBLES\60264606-WTP\000 CAD\PLANSET\4-STRUCT\S06-02.dwg Layout Name: S06-02 - Plotted by: Rodriguez, David Date: 11/28/2012 - 4:34 PM
XREFS: G-BD-PR - S-NP-06 - S-RP-06 IMAGES: CITY OF PASO LOGO_1.png -

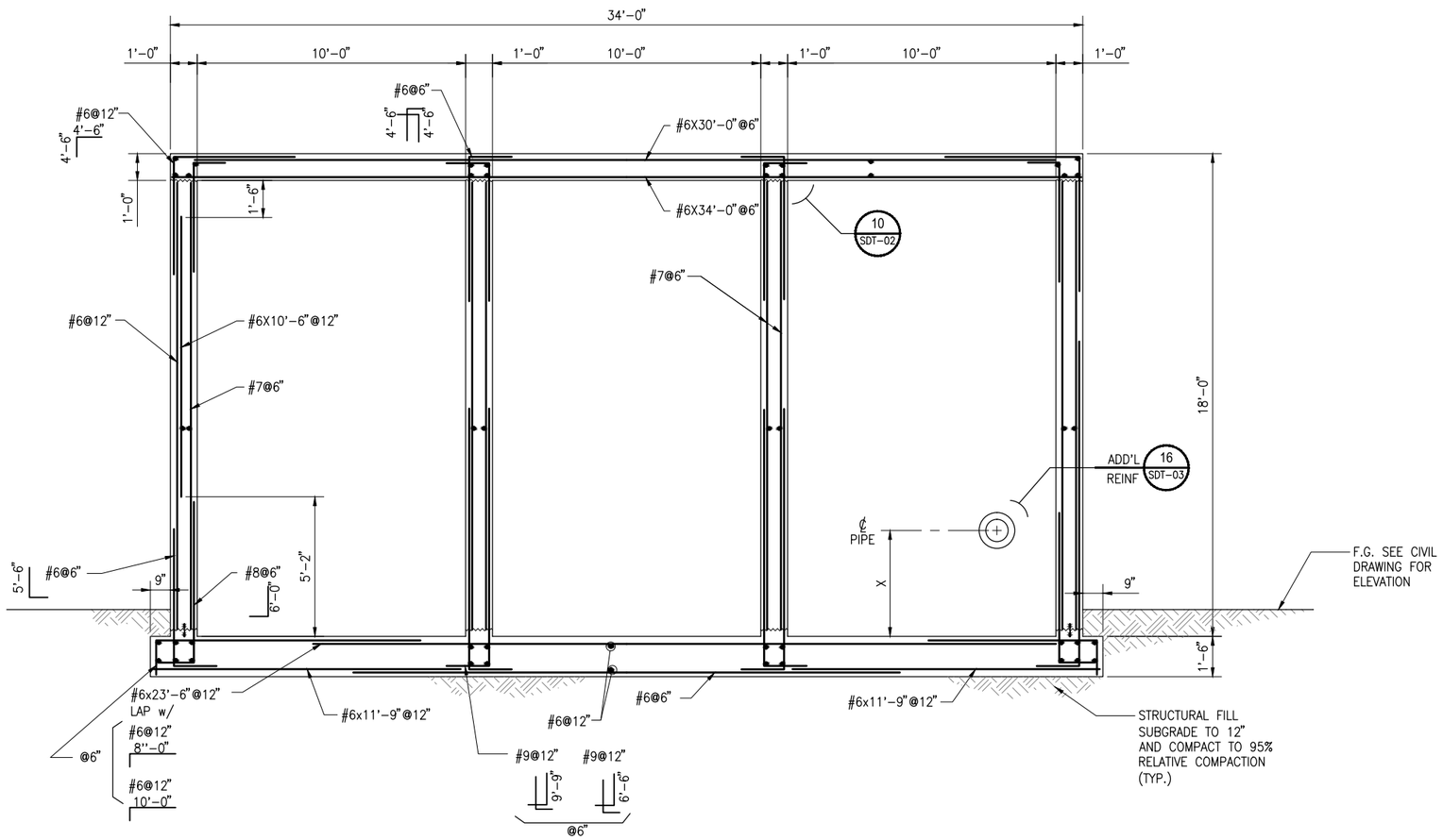

SECTION A
SCALE: 3/16" = 1' - 0"

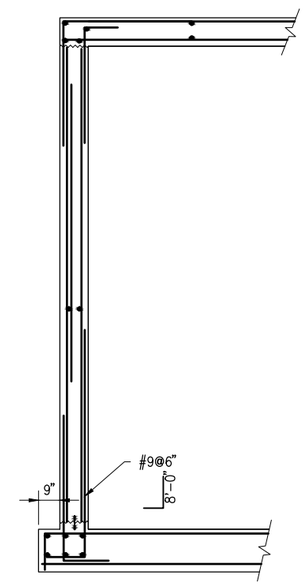

SECTION B
SCALE: 3/16" = 1' - 0"

PRELIMINARY
30% SUBMITTAL

0 1/2 1
IF THIS BAR DOES NOT MEASURE 1" THEN DRAWING IS NOT TO FULL SCALE

REV	DATE	DESCRIPTION	APPR

PROJECT ENGINEER | REG NUMBER | EXP DATE

AECOM

AECOM
1194 PACIFIC STREET, SUITE 204
SAN LUIS OBISPO, CA 93401
T 805.542.9840 F 805.542.9990
www.aecom.com

CITY OF EL PASO DE ROBLES
WATER TREATMENT PLANT PROJECT

SECTION

DESIGNED:
DETAILED:
CHECKED:
APPROVED:
DATE: November 2012
AECOM PROJECT NO. 60264606
P.R. PROJECT NO.
CADD STDS. AECOM

S06-03
SHEET
OF -

DWG: V:\PASO ROBLES\60264606-WTP\000 CAD\PLANSET\4-STRUCT\S06-03.dwg Layout Name: S06-03 - Plotted by: Rodriguez, David Date: 11/28/2012 - 4:34 PM
XREFS: G-BD-PR - S-NP-06 - S-RP-06 IMAGES: CITY OF PASO LOGO_1.png -

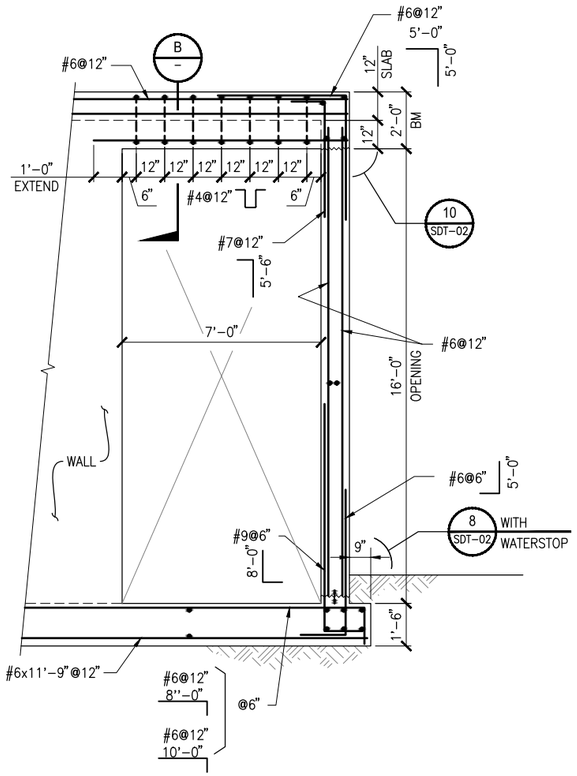

SECTION A

SCALE: 3/8" = 1' - 0"

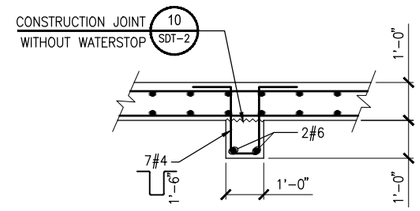

SECTION B

SCALE: 1/2" = 1' - 0"

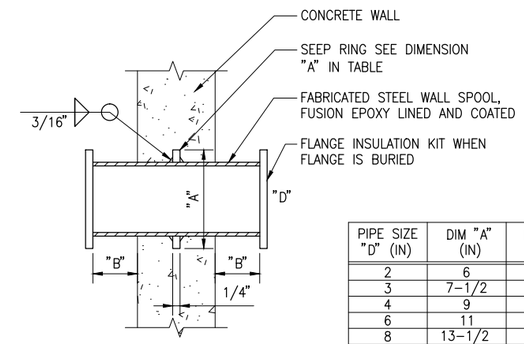

PIPE SIZE "D" (IN)	DIM "A" (IN)	DIM "B" (IN)
2	6	6
3	7-1/2	6
4	9	6
6	11	9
8	13-1/2	9
10	16	9
12	19	9

SEEP RING E

NOT TO SCALE

PRELIMINARY
30% SUBMITTAL

0 1/2 1
IF THIS BAR DOES NOT MEASURE 1" THEN DRAWING IS NOT TO FULL SCALE

REV	DATE	DESCRIPTION	APPR

PROJECT ENGINEER | REG NUMBER | EXP DATE

AECOM
AECOM
1194 PACIFIC STREET, SUITE 204
SAN LUIS OBISPO, CA 93401
T 805.542.9840 F 805.542.9990
www.aecom.com

CITY OF EL PASO DE ROBLES
WATER TREATMENT PLANT PROJECT

SECTION

DESIGNED:
DETAILED:
CHECKED:
APPROVED:
DATE: November 2012
AECOM PROJECT NO. 60264606
P.R. PROJECT NO.
CADD STDS. AECOM

S06-04
SHEET
OF -

DWG: V:\PASO ROBLES\60264606-WTP\000 CAD\PLANSET\4-STRUCT\S06-04.dwg Layout Name: S06-04 - Plotted by: Rodriguez, David Date: 11/28/2012 - 4:35 PM
XREFS: G-BD-PR - S-NP-06 - S-RP-06 IMAGES: CITY OF PASO LOGO_1.png -

CONCRETE
MASONRY
STEEL
ALUMINIUM
GRATING
CHECKERED PLATE
REINFORCING STEEL IN CONCRETE
COMPACTED BACKFILL
SELECT GRANULAR FILL MATERIAL
SAND
UNDISTURBED EARTH
DIRECTION OF GRATING BEARING BARS
HANDRAIL (PLAN)
STEEL BEAM (PLAN)
EXISTING CONCRETE
EXISTING MASONRY

STRUCTURAL LEGEND (1 / -)

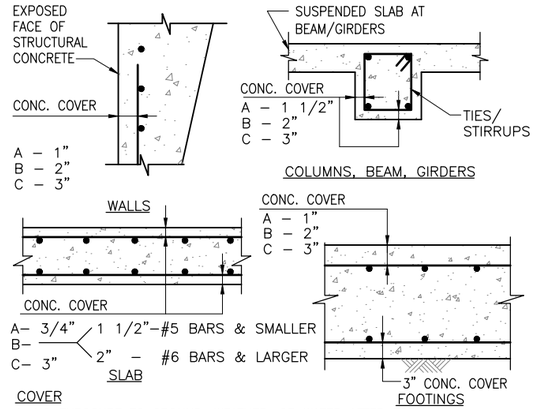

COVER

A. NO EXPOSURE TO GROUND, WEATHER, OR WATER AFTER FORM REMOVAL.*

B. EXPOSURE TO GROUND, WEATHER, OR WATER AFTER FORM REMOVAL.

C. CONCRETE PLACED AGAINST SOIL.

* USE COVER "B" WHEN EXPOSURE IS TO INTERIOR OF HYDRAULIC CONTAINED SPACES. (IE. PROCESS ROOF SLABS)

NOTE: UNLESS NOTED OTHERWISE ON STRUCTURAL DRAWINGS. COORDINATE WITH PLASTIC LINER DETAILS.
3" REBAR COVER APPLY TO WALLS WITH PLASTIC LINER.
3" REBAR COVER APPLY TO WALLS OF INFLUENT STRUCTURES.

CONCRETE COVER OVER REINFORCING STEEL (2 / -)

NOT TO SCALE

STRUCTURAL NOTES

GENERAL:

1. THE CONTRACTOR SHALL VERIFY ALL DIMENSIONS BEFORE STARTING WORK AND SHALL IMMEDIATELY NOTIFY THE OWNER'S REPRESENTATIVE OF ANY DISCREPANCIES.
2. NOTES AND DETAILS ON THE DRAWINGS SHALL TAKE PRECEDENCE OVER THE TYPICAL STRUCTURAL NOTES AND DETAILS.
3. WHERE NO CONSTRUCTION DETAILS ARE SHOWN OR NOTED FOR ANY PART OF THE WORK, DETAILS SHALL BE IN ACCORDANCE WITH THE TYPICAL DETAILS AND BEST CONSTRUCTION STANDARDS.
4. ALL CONSTRUCTION SHALL BE IN ACCORDANCE WITH THE CONSTRUCTION SPECIFICATIONS.
5. MECHANICAL, PROCESS AND ELECTRICAL EQUIPMENT SUPPORTS, ANCHORAGES, OPENINGS, RECESSES AND REVEALS NOT SHOWN ON THE STRUCTURAL DRAWINGS BUT REQUIRED BY OTHER DISCIPLINE WORK, SHALL BE PROVIDED AND INSTALLED BY THE CONTRACTOR PRIOR TO PLACING CONCRETE OR STAGED CONSTRUCTION.

DESIGN CRITERIA:

1. CALIFORNIA BUILDING CODE 2010 EDITION (CBC REVISIONS).
2. WALLS: LATERAL PRESSURES:
   ACTIVE PRESSURE: 35 PCF
   AT–REST PRESSURE: 65 PCF
3. SEISMIC DATA:
   S_{DS} = 0.817, S_{D1} =0.533, Site Class D
4. LOADING
   ROOF LL=20 PSF
   ROOF SNOW= 0 PSF
   STAIR AND WALKWAY LL=100 PSF
   WIND SPEED=85 mph, EXP. C.

ANCHOR BOLT NOTES

1. OVERHEAD ANCHORS BOLTS SHALL BE TAPPED CEILING ANCHOR BOLTS AS SHOWN ON PROCESS DRAWINGS AND TYPICAL DETAILS.
2. DRILLED ANCHORS SHALL BE ICBO SEISMIC APPROVED WEDGE ANCHORS. MANUFACTURER SHALL BE HILTI KWIK BOLT II OR EQUAL.
3. EPOXY ANCHORS SHALL BE ICBO APPROVED GROUTED EPOXY ANCHORS HILTI HSE 2421 OR EQUAL. BOLTS SHALL BE ASTM A 193.
4. ALL EQUIPMENT AND MOTORS SHALL BE ANCHORED WITH CAST–IN–PLACE ANCHOR BOLTS.

EARTHWORK AND FOUNDATIONS:

1. FOUNDATIONS SHALL BE INSTALLED IN ACCORDANCE WITH THE CONSTRUCTION DOCUMENTS.
2. REFER TO CONSTRUCTION SPECIFICATIONS FOR EARTHWORK PREPARATION, FILL AND COMPACTION.

CONCRETE:

1. CONCRETE SHALL HAVE A MINIMUM COMPRESSIVE STRENGTH F'C=4000PSI FOR ALL STRUCTURES; PAVEMENTS–F'C=3000PSI
2. TYPE II/V CEMENT.
3. REINFORCING STEEL SHALL CONFORM TO ASTM A615 OR A706, GRADE 60.
4. NO PIPES OR DUCTS SHALL BE PLACED IN CONCRETE WALLS, PIERS, SLABS, AND FOOTINGS UNLESS SPECIFICALLY DETAILED.
5. CONSTRUCTION JOINTS NOT INDICATED ON THE DRAWINGS AND REQUIRED FOR CONSTRUCTION SHALL BE KEYED AND DOWELED AS REVIEWED BY THE OWNER'S REPRESENTATIVE.
6. UNLESS OTHERWISE DETAILED, PROVIDE SPACER TIES AT 30–INCHES O.C. IN ALL BEAMS AND FOOTINGS TO MAINTAIN REINFORCING IN PLACE.
7. PROVIDE 3/4–INCH CHAMFER ON ALL EXPOSED CORNERS.
8. JOINTS IN STRUCTURES SHALL BE AS INDICATED ON THE DRAWINGS.
9. REINFORCING STEEL BAR SPLICES SHALL BE BAR–GRIP COUPLERS, ICBO RATED.
10. WATERSTOP SHALL BE PLACED AT ALL WATER BEARING SURFACE JOINTS.

STRUCTURAL STEEL:

1. MATERIAL SHALL CONFORM TO THE FOLLOWING SPECIFICATIONS;

STRUCTURAL STEEL SHAPES & PLATES	ASTM A36
PIPE	ASTM A36 GRADE B
HSS	ASTM A500, GRADE B
MACHINE BOLTS	ASTM A307
ANCHOR BOLTS	ASTM A193–OR ASTM F593,TYPE 316

2. ALL CONNECTIONS AND/OR ASSEMBLIES SHALL BE SHOP WELDED AND FIELD BOLTED UNLESS OTHERWISE INDICATED. ALL HIGH STRENGTH BOLTS SHALL BE 3/4–INCH DIAMETER BEARING TYPE CONNECTIONS (A325N) U.N.O.
3. ALL GUSSET PLATES SHALL BE 3/8–INCHES U.N.O.
4. WELDING ELECTRODES SHALL BE E–70 SERIES.
5. ALL STRUCTURAL STEEL AND CONNECTIONS BOLTS SHALL BE GALVANIZED U.N.O. SEE SPECIFICATIONS.
6. SUPPORT BARS AND ANGLES FOR ALUMINUM GRATING SHALL BE TYPE 316 CONFORMING TO ASTM A276 STAINLESS STEEL U.N.O.

TESTS AND SPECIAL INSPECTIONS

STRUCTURAL TESTS AND INSPECTIONS WILL BE PROVIDED BY THE OWNER OR DESIGNATED QUALIFIED TESTING LABORATORY CONFORMING TO THE REQUIREMENTS OF SECTION 1704 OF THE 2007 CBC.

SPECIFIED CONCRETE TESTING DURING CONSTRUCTION WILL BE PROVIDED BY THE OWNER OR DESIGNATED TESTING LABORATORY. SPECIFIED LABORATORY TEST MIXES SHALL BE THE RESPONSIBILITY OF THE CONTRACTOR.

TESTS	INSPECTIONS
☒ FILL MATERIAL	☒ GRADING, EXCAVATION, AND FILL
☒ FILL COMPACTION	☐ PILE/PIER INSTALLATION
☒ REINFORCING STEEL	☒ REINFORCEMENT PLACEMENT
☒ CONCRETE	☒ CONCRETE PLACEMENT
☐ STRUCTURAL STEEL	☐ SHOP WELDING
☐ MASONRY GROUT	☒ FIELD WELDING
☐ MASONRY	☒ HIGH STRENGTH BOLTING
☒ GROUT AND MORTAR	☐ MASONRY PLACEMENT AND
☐ EPOXY AND EXPANSION ANCHORS	☐ GROUTING
☐ SHOTCRETE	☐ EPOXY AND EXPANSION ANCHORS
	☐ SHOTCRETE
	☒ ANCHOR BOLT SIZE AND PLACEMENT

SPECIAL INSPECTION:

1. EARTHWORK AND GRADING
2. PLACEMENT OF REINFORCING
3. CONCRETE PLACEMENT
4. ANCHOR BOLTS
5. ALUMINUM AND STEEL SITE FABRICATION & WELDING

UNLESS OTHERWISE SHOWN, CONCRETE WALLS & SLABS SHALL BE REINFORCED AS FOLLOWS (MINIMUM):

#4 @ 12 E.W. CENTER OF 6" SECTIONS; #5 @ 12 E.W. CENTER OF 8" SECTION; #4 @ 12 E.W.E.F. OF 10" SECTION; #5 @ 12 E.W.E.F. OF 12" SECTION; SINGLE MAT REINFORCING SHALL BE CENTER OF SECTION UNLESS SHOWN OTHERWISE.

UNLESS NOTED OTHERWISE ALL WALL REINFORCING BARS SHALL BE CONT AROUND CORNERS & THROUGH COLUMNS OR PILASTERS. ALL REINFORCEMENT LAPS, UNLESS NOTED OTHERWISE, SHALL SATISFY THE FOLLOWING MINIMUM REQUIREMENTS:

** DETAIL OF REINFORCEMENT (LAP LENGTH) f'c = 4000 PSI								
BAR SIZE	#3 #4	#5	#6	#7	#8	#9	#10	#11
* TOP BARS	2'–8"	3'–4"	4'–0"	5'–10"	6'–8"	7'–6"	8'–4"	9'–2"
OTHER BARS	2'–1"	2'–7"	3'–2"	4'–6"	5'–2"	5'–9"	6'–5"	7'–1"

* TOP BARS SHALL BE DEFINED AS ANY HORIZONTAL BARS PLACED SUCH THAT MORE THAN 12" OF FRESH CONCRETE IS CAST IN THE MEMBER BELOW THE BARS IN ANY SINGLE POUR.

** LAP LENGTH TO BE INCREASED BY 1.5 X FOR COVER LESS THAN 1 BAR DIAMETER.

REINFORCEMENT DETAILS (3 / -)

BAR SIZE	90° HOOKS "X"
#3	6"
#4	8"
#5	10"
#6	12"
#7	14"

BAR SIZE	90° HOOKS "X"
#8	16"
#9	19"
#10	22"
#11	24"

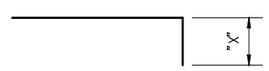

NOTE:
UNLESS NOTED OTHERWISE ON DRAWINGS ALL LENGTHS OF BAR HOOKS IN FOOTINGS, COLUMNS, WALLS AND SLABS SHALL BE GIVEN IN TABLE.

HOOK LENGTH "X" IS STANDARD 90° BAR HOOK LENGTH.

STANDARD 90° BAR HOOK (4 / -)

NOT TO SCALE

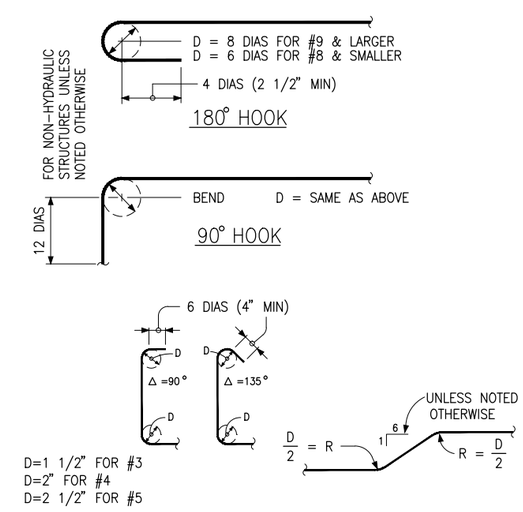

TYPICAL REINFORCING BENDS (5 / -)

NOT TO SCALE

PRELIMINARY 30% SUBMITTAL

0 1/2 1
IF THIS BAR DOES NOT MEASURE 1" THEN DRAWING IS NOT TO FULL SCALE

REV	DATE	PROJECT ENGINEER	DESCRIPTION	REG NUMBER	EXP DATE	APPR
		DAVE SCHERSCHEL		S1572	06/30/2012	

AECOM
AECOM
1194 PACIFIC STREET, SUITE 204
SAN LUIS OBISPO ,CA 93401
T 805.542.9840 F 805.542.9990
www.aecom.com

CITY OF EL PASO DE ROBLES
WATER TREATMENT PLANT PROJECT

DETAILS - 1

DESIGNED:
DETAILED: DJS
CHECKED: TYC
APPROVED:
DATE: November 2012
AECOM PROJECT NO. 60264606
P.R. PROJECT NO.
CADD STDS. AECOM

SDT-01
SHEET OF -

DWG: V:\PASO ROBLES\60264606-WTP\000 CAD\PLANSET\4-STRUCT\SDT-01.dwg Layout Name: SDT-01 - Plotted by: Rodriguez, David Date: 11/28/2012 - 4:35 PM
XREFS: C-BD-PR IMAGES: CITY OF PASO LOGO_1.png -

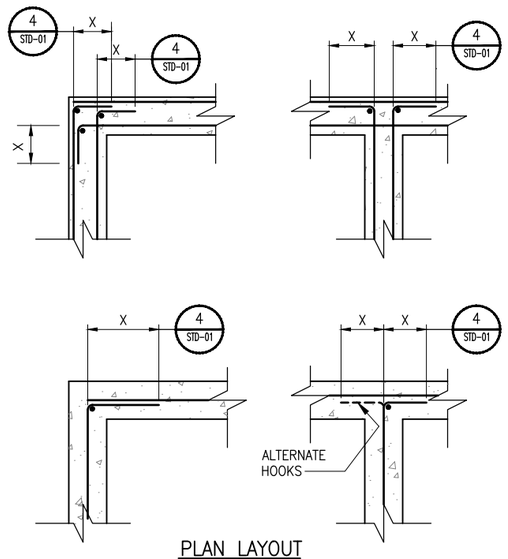

PLAN LAYOUT

HORIZONTAL REINFORCEMENT AT WALL INTERSECTION

NOT TO SCALE — 1

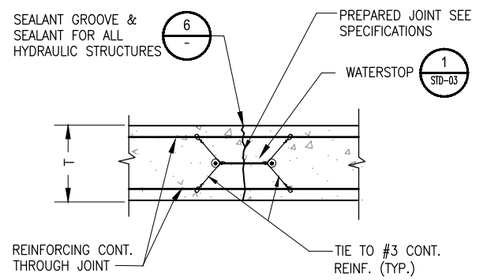

SECTION

CONSTRUCTION JOINT SLABS & FOOTINGS

WITH WATERSTOP & SEALANT — 2

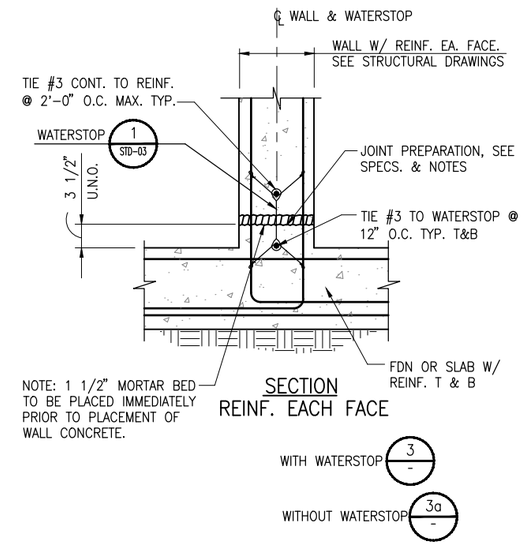

SECTION
REINF. EACH FACE

WITH WATERSTOP 3 –

WITHOUT WATERSTOP 3a –

CONSTRUCTION JOINT WALL TO FOUNDATION

WITH WATERSTOP — 3

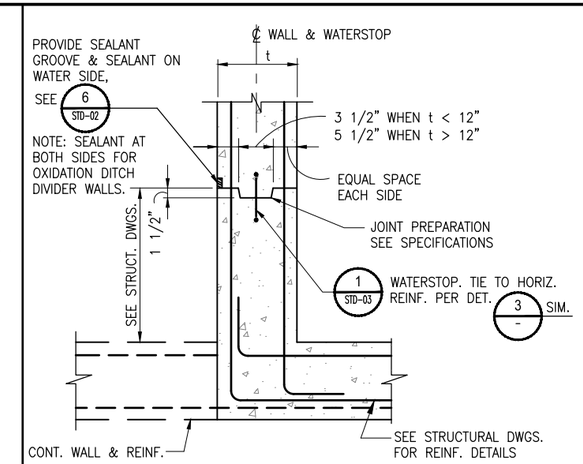

PLAN
REINF. EACH FACE

WITH WATERSTOP 4 –

WITHOUT WATERSTOP 4a –

NOTE:
OMIT SEALANT AT WALLS WITHOUT WATERSTOP.

CONSTRUCTION JOINT WALL TO WALL

NOT TO SCALE — 4

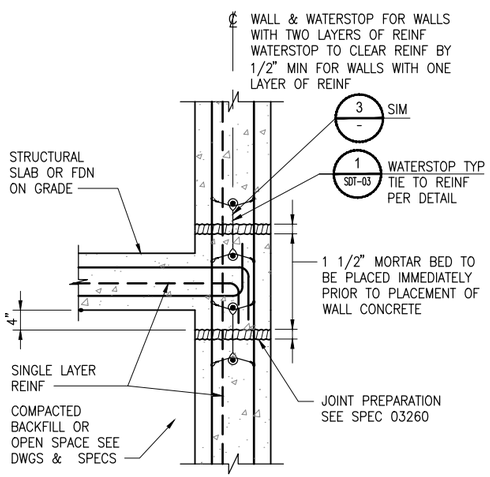

SECTION

CONSTRUCTION JOINT SLAB TO WALL

NOT TO SCALE — 5

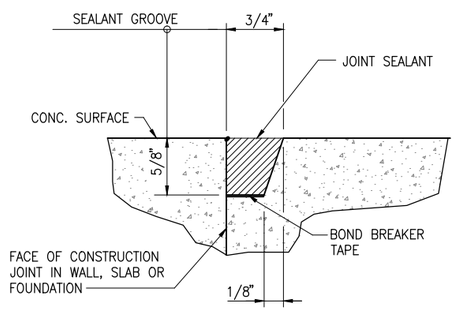

NOTE

1. SEE SPECIFICATIONS FOR SURFACE PREPARATION.
2. PRIME VERTICAL EDGES.
3. CONSTRUCTION JOINTS EXPOSED TO HYDRAULIC OR SOIL BEARING SURFACES TO HAVE GROOVE AND SEALANT. STOP GROOVE AND SEALANT 6 INCHES BELOW EXTERIOR GRADE OR AS INDICATED ON DRAWINGS.

SEALANT GROOVE CONSTRUCTION JOINTS

NOT TO SCALE — 6

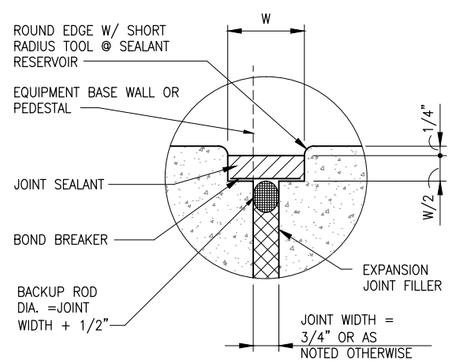

NOTE: W = 1 1/2" UNLESS NOTED OTHERWISE

EXPANSION JOINT SEALANT RESERVOIR

NOT TO SCALE — 7

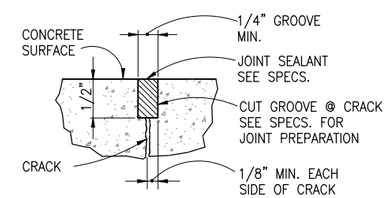

ALL CRACKS IN STRUCTURE SHALL BE REPAIRED AS INDICATED AND IN ACCORDANCE WITH THE SPECIFICATIONS.

ALTERNATE REPAIRS:

1. AS REVIEWED BY THE ENGINEER.
2. EPOXY JOINT REPAIR OR CRYSTALLINE WATERPROOFING SUBMIT MATERIALS AND APPLICATION FOR REVIEW BY THE ENGINEER.

CONCRETE CRACK REPAIR

NOT TO SCALE — 8

PRELIMINARY 30% SUBMITTAL

0 1/2 1
IF THIS BAR DOES NOT MEASURE 1" THEN DRAWING IS NOT TO FULL SCALE

REV	DATE	DESCRIPTION	APPR

PROJECT ENGINEER: DAVE SCHERSCHEL
REG NUMBER: S1572
EXP DATE: 06/30/2012

AECOM
1194 PACIFIC STREET, SUITE 204
SAN LUIS OBISPO, CA 93401
T 805.542.9840 F 805.542.9990
www.aecom.com

CITY OF EL PASO DE ROBLES
WATER TREATMENT PLANT PROJECT

DETAILS - 2

DESIGNED:
DETAILED: PJS TYG
CHECKED:
APPROVED:
DATE: November 2012
AECOM PROJECT NO. 60264606
P.R. PROJECT NO.
CADD STDS. AECOM

SDT-02
SHEET OF -

DWG: V:\PASO ROBLES\60264606-WTP\000 CAD\PLANSET\4-STRUCT\SDT-02.dwg Layout Name: SDT-02 - Plotted by: Rodriguez, David Date: 11/28/2012 - 4:35 PM
XREFS: G-BD-PR IMAGES: CITY OF PASO LOGO_1.png -

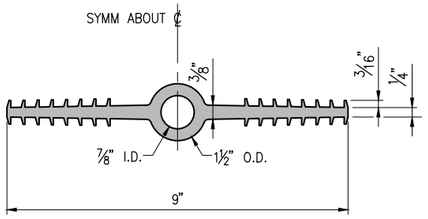

EXPANSION JOINT

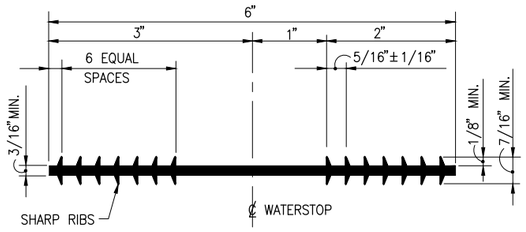

CONSTRUCTION JOINT

WATERSTOP DETAILS

NOT TO SCALE

13 / –

ADDITIONAL REINFORCING AT CIRCULAR OPENINGS NOTES:

1) NUMBER OF ADDITIONAL REINFORCING BARS EACH SIDE OF OPENING SHALL BE EQUAL TO 1/2 THE NUMBER OF INTERRUPTED BARS IN EACH LAYER OF REINFORCING.

2) SIZE OF ADDITIONAL REINFORCING BARS TO EQUAL SIZE OF INTERRUPTED REINFORCING BARS.

3) PROVIDE STD. HOOKS ON BARS IF LAP LENGTH EXTENSION CANNOT BE OBTAINED OR AT JOINTS OR OTHER OBSTRUCTIONS. PLACE ADDITIONAL BARS IN SAME PLANES AS INTERRUPTED REINF.

4) SPECIAL OPENING CONDITIONS SHALL BE AS INDICATED ON THE DRAWINGS OR AS DIRECTED BY THE OWNERS REPRESENTATIVE.

5) ALL REINFORCING TO CLEAR OPENING, PIPE OR FLANGE COLLARS BY 2".

6) WHEN THE DISTANCE BETWEEN THE O.D. OF A PIPE OR SLEEVE TO AN INTERSECTING WALL/SLAB OR ADJACENT PIPE OR SLEEVE IS LESS THAN THE SUM OF SPACES NECESSARY TO ACCOMMODATE THE REPLACEMENT REINFORCING AT THE MINIMUM SPACING:
   a. INCREASE BAR SIZE BY ONE SIZE.
   b. ADD ONLY ADDITIONAL REINFORCING NECESSARY TO MAINTAIN A MINIMUM OF 3 IN. SPACING BETWEEN ADJACENT WALL/SLAB, PIPE OR SLEEVE.

NOTES FOR ADDITIONAL REINF. AT CIRCULAR OPENINGS

14 / –

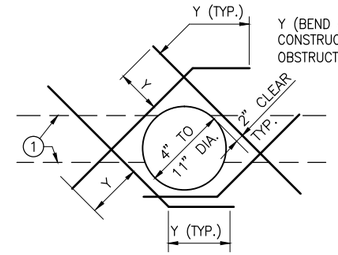

BAR SIZE	"Y" GRADE 40	"Y" GRADE 60
#4	12"	12"
#5	15"	15"
#6	18"	18"
#7	21"	24"
#8	24"	30"

1. CUT TYPICAL REINFORCEMENT AT OPENING.
2. DIAGONAL BARS TO BE PLACED :
   A. AT ℄ OF WALL OR SLAB WHERE ONE LAYER OF REINFORCEMENT IS PROVIDED.
   B. AT EACH FACE OF WALL OR SLAB WHERE TWO LAYERS OF REINFOCEMENT ARE PROVIDED.
3. UNLESS OTHERWISE NOTED, SIZE OF DIAGONAL BARS SHALL BE THE SIZE OF THE LARGEST REINFORCEMENT CUT.
4. USE THIS DETAIL FOR ALL CIRCULAR OPENINGS 4" THROUGH 11" UNLESS NOTED OTHERWISE ON THE STRUCTURAL DRAWINGS.

ADDITIONAL REINFORCEMENT AT CIRCULAR OPENINGS

NOT TO SCALE

15 / –

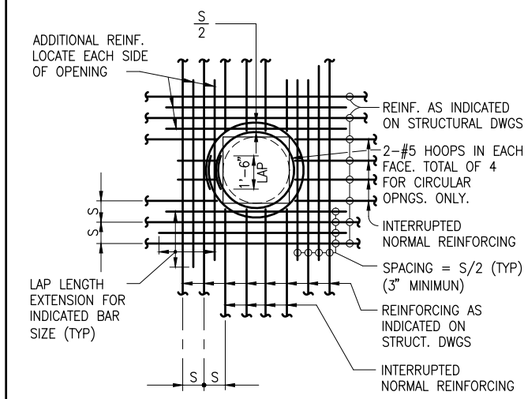

ADDITIONAL REINFORCEMENT AT OPENING 12" AND GREATER

ADDITIONAL REINFORCEMENT AT CIRCULAR OPENINGS

NOT TO SCALE

16 / –

SCHEDULE BAR EMBEDMENT LENGTH

BAR SIZE	GRADE 60 a	b	c
#4	16"	12"	20"
#5	20"	15"	26"
#6	24"	18"	31"
#7	30"	24"	39"
#8	39"	30"	51"
#9	49"	38"	65"
#10	63"	48"	82"

1. THIS DETAIL TO BE USED UNLESS NOTED OTHERWISE ON STRUCTURAL DRAWINGS.
2. ADDITIONAL REINFORCEMENT AT OPENING: AS_1 AND AS_2 = 1/2 AREA OF CUT BARS TO BE ADDED ON EACH SIDE OF OPENING.
3. ADDITIONAL REINF. AS_1 AND AS_2 TO BE PLACED:
   a) AT ℄ OF WALLS OR SLABS WHERE ONE LAYER OF REINFORCEMENT IS PROVIDED.
   b) AT EACH FACE OF WALLS OR SLABS WHERE TWO LAYERS OF REINFORCEMENT ARE PROVIDED.
4. PROVIDE DIAGONAL DOWEL FOR EACH LAYER OF REINFORCEMENT (#5 x 3'-0") U.N.O.
5. LOCATE ADDITIONAL REINF. AT 1/2 SPACE BETWEEN NORMAL BARS NOT CUT.
6. WHEN THE DISTANCE BETWEEN OPENING IN WALL OR SLAB AND INTERSECTING WALL OR SLAB IS LESS THAN THE SUM OF SPACES NECESSARY TO ACCOMMODATE THE REPLACEMENT REINFORCING AT THE MINIMUM SPACING:
   a. INCREASE BAR SIZE BY ONE SIZE.
   b. ADD ONLY ADDITIONAL REINFORCING NECESSARY TO MAINTAIN A MINIMUM OF 3 IN. SPACING BETWEEN ADJACENT WALL, SLAB, PIPE OR SLEEVE.
7. 1-#5 DIAG. BAR E.F. AT SQUARE OR RECTANGULAR OPENINGS ONLY. HOOK ONLY IF UNABLE TO OBTAIN LAP.

NOTES FOR ADDITIONAL REINF. AT RECTANGULAR OPENINGS

17 / –

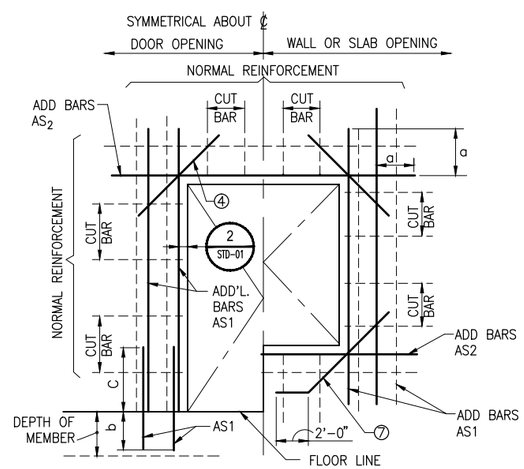

IF "b" IS GREATER THAN DEPTH OF MEMBER PROVIDE HOOKED BAR.
MINIMUM SPACING OF REINF = 3 IN.
AS = AREA OF REINF.

SEE NOTES 17 / STD-03

ELEVATION OR PLAN

ADDITIONAL REINFORCEMENT AT RECTANGULAR OPENING

NOT TO SCALE

18 / –

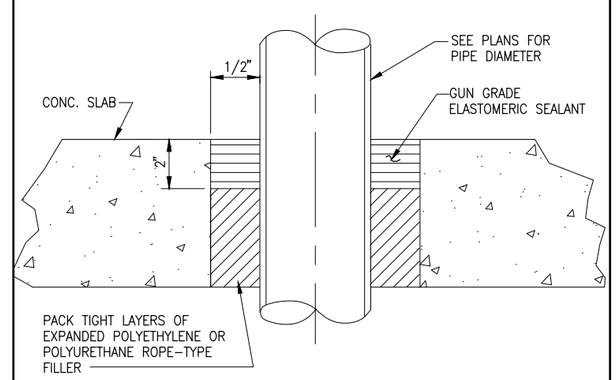

NOTE: OPENING 4" TO 11"ø SEE 15 / –
FOR ADDITIONAL REINFORCEMENT

NOTE: OPENING 12"ø OR GREATER, SEE 16 / –
FOR ADDITIONAL REINFORCEMENT

TYPICAL FLOOR PENETRATION

SCALE: NONE

19 / –

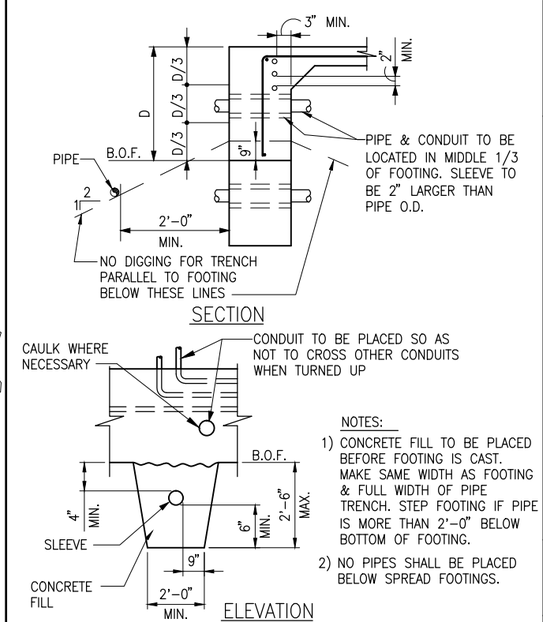

NOTES:
1) CONCRETE FILL TO BE PLACED BEFORE FOOTING IS CAST. MAKE SAME WIDTH AS FOOTING & FULL WIDTH OF PIPE TRENCH. STEP FOOTING IF PIPE IS MORE THAN 2'-0" BELOW BOTTOM OF FOOTING.
2) NO PIPES SHALL BE PLACED BELOW SPREAD FOOTINGS.

PIPE & CONDUIT PENETRATIONS AT CONCRETE FOOTINGS

NOT TO SCALE

20 / –

PRELIMINARY 30% SUBMITTAL

0 1/2 1
IF THIS BAR DOES NOT MEASURE 1" THEN DRAWING IS NOT TO FULL SCALE

REV	DATE	DESCRIPTION	APPR

PROJECT ENGINEER: DAVE SCHERSCHEL
REG NUMBER: S1572
EXP DATE: 09/30/2012

AECOM
1194 PACIFIC STREET, SUITE 204
SAN LUIS OBISPO, CA 93401
T 805.542.9840 F 805.542.9990
www.aecom.com

CITY OF EL PASO DE ROBLES
WATER TREATMENT PLANT PROJECT

DETAILS - 3

DESIGNED: DJS
DETAILED: TYG
CHECKED:
APPROVED:
DATE: November 2012
AECOM PROJECT NO. 60264606
P.R. PROJECT NO.
CADD STDS. AECOM

SDT-03
SHEET OF -

DWG: V:\PASO ROBLES\60264606-WTP\000 CAD\PLANSET\1-STRUCT\SDT-03.dwg Layout Name: SDT-03 - Plotted by: Rodriguez, David Date: 11/28/2012 - 4:35 PM
XREFS: C-BD-PR IMAGES: CITY OF PASO LOGO_1.png -

1. ALL HANDRAILS SHALL BE FIXED UNLESS NOTED OTHERWISE.
2. ALL HANDRAILS, KICKPLATES, & APPURTENANCES SHALL BE ALUMINUM, U.N.O.
3. ALL HANDRAILS SHALL BE IN ACCORDANCE WITH SAFETY CODE REQUIREMENTS.
4. PLACE CENTER OF HANDRAIL/POST ANCHOR 6" FROM EDGE OF CONCRETE UNLESS NOTED OTHERWISE.
5. HANDRAIL ALONG WALLS SHALL BE SINGLE RAIL (WHEN NOTED ON DWGS) W/ HEIGHT TO MATCH TOP RAIL ON OPPOSITE SIDE.
6. STAIR RAILS ALONG WALLS SHALL BE FASTENED WITH STANDARD WALL BRACKETS PER HANDRAIL MFR. AT 5'-0" O.C. MAXIMUM. END OR RAILS SHALL HAVE CLOSURES.
7. PROVIDE C4x2.331 KICKPLATE WHEN NOTED ON DWGS. KICKPLATE MATERIAL SHALL BE SAME AS HANDRAIL. FASTEN TO H.R. POST W/2-3/8ø SST MACHINE BOLTS. PROVIDE SLIP ASSEMBLY AT ALL EXPANSION JOINTS & AS REQUIRED AT MIDWAY BETWEEN POST. SEE DETAIL 24 / STD-04
8. PROVIDE 2-#3ø x 2'-6" REINFORCING BARS ADJACENT TO EVERY CAST-IN-PLACE POST SUPPORT IF LONGITUDINAL REINFORCING DOES NOT PASS BETWEEN POST POCKET AND EDGE OF CONCRETE.
9. PROVIDE 3/4" EXPANSION JOINTS PER EVERY 50 LINEAL FT. OF HANDRAIL & AT EXPANSION JOINTS IN STRUCTURES.
10. COAT ALL SURFACES OF ALUMINUM THAT COME IN CONTACT WITH STEEL & CONCRETE PER SPEC SECTION 099000 SYSTEM 54.

HANDRAIL NOTES (21 / -)

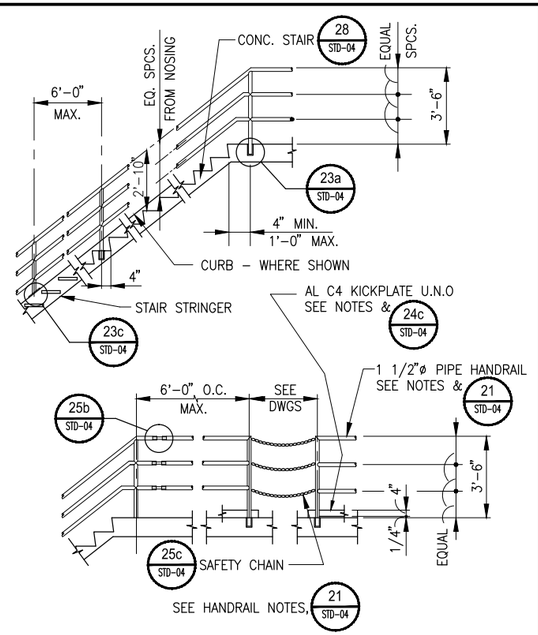

HANDRAILS (22 / -)
NOT TO SCALE

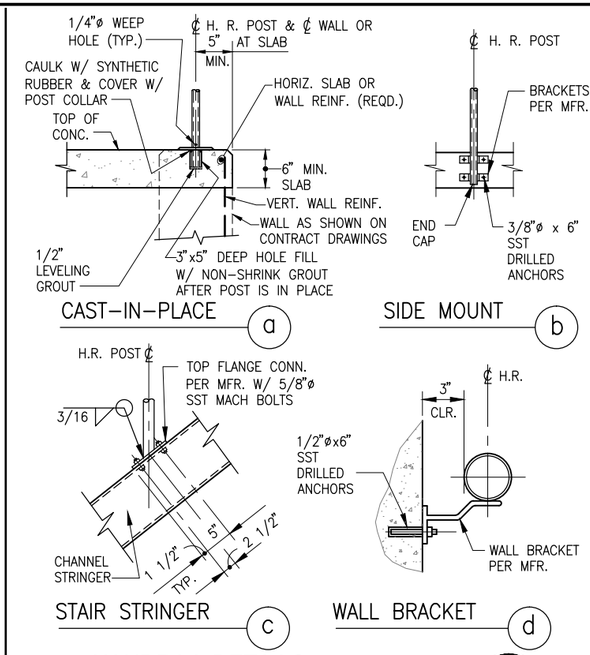

HANDRAIL DETAILS (23 / -)
NOT TO SCALE

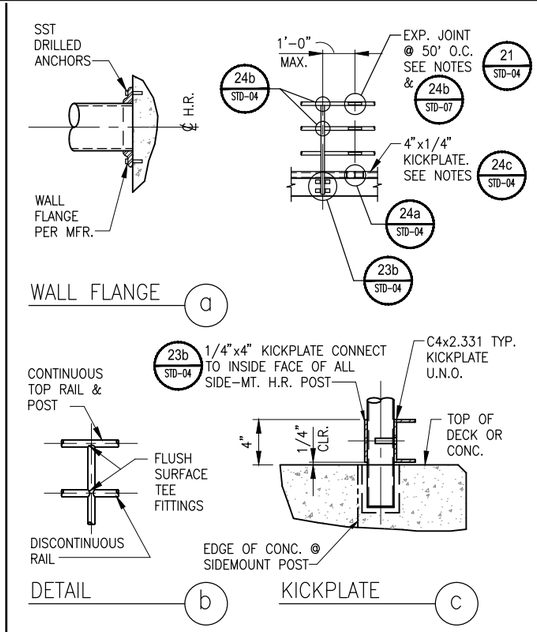

HANDRAIL DETAILS (24 / -)
NOT TO SCALE

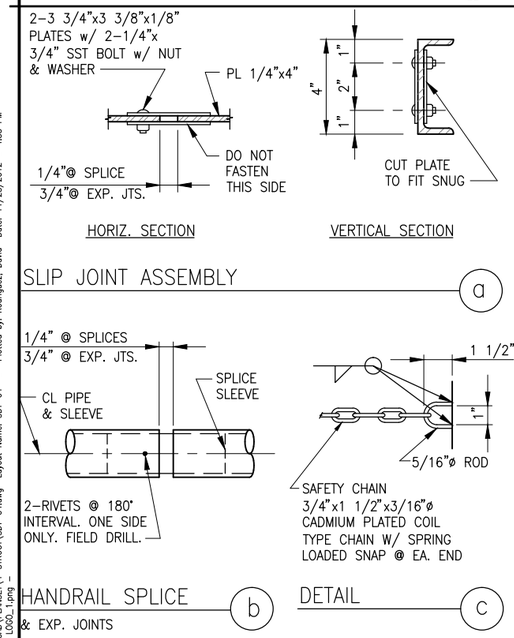

HANDRAIL DETAILS (25 / -)
NOT TO SCALE

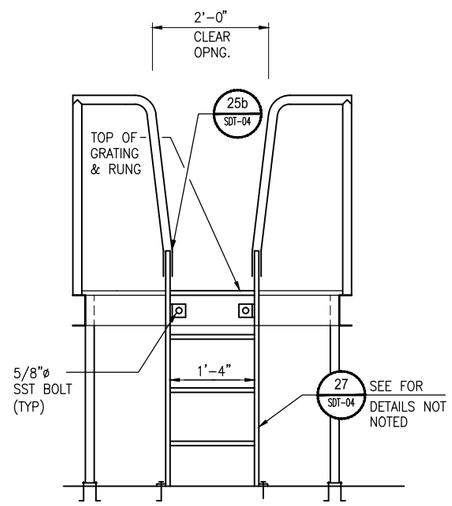

STEP-THROUGH LADDER (26 / -)
NOT TO SCALE

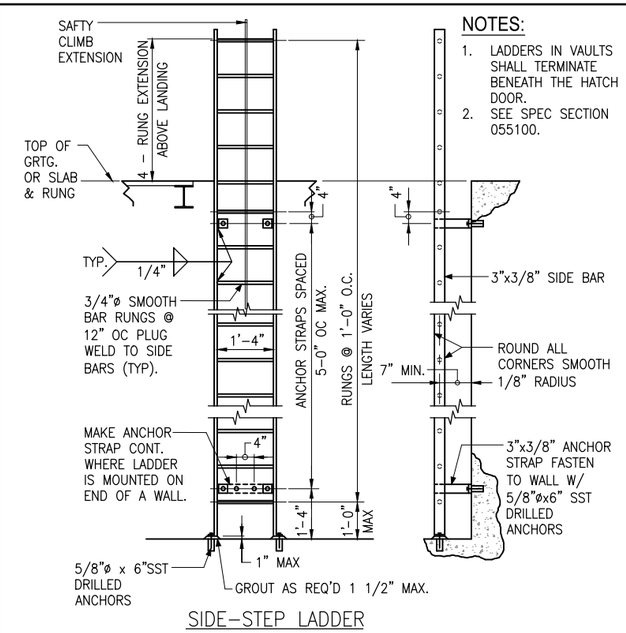

NOTES:
1. LADDERS IN VAULTS SHALL TERMINATE BENEATH THE HATCH DOOR.
2. SEE SPEC SECTION 055100.

SIDE-STEP STAINLESS STEEL LADDER DETAILS (27 / -)
NOT TO SCALE

PRELIMINARY 30% SUBMITTAL

0 1/2 1
IF THIS BAR DOES NOT MEASURE 1" THEN DRAWING IS NOT TO FULL SCALE

REV	DATE	DESCRIPTION	APPR

PROJECT ENGINEER: DAVE SCHERSCHEL
REG NUMBER: S1572
EXP DATE: 06/30/2012

AECOM
AECOM
1194 PACIFIC STREET, SUITE 204
SAN LUIS OBISPO, CA 93401
T 805.542.9840 F 805.542.9990
www.aecom.com

CITY OF EL PASO DE ROBLES
WATER TREATMENT PLANT PROJECT

DETAILS - 4

DESIGNED:
DETAILED: DJS TYO
CHECKED:
APPROVED:
DATE: November 2012
AECOM PROJECT NO. 60264606
P.R. PROJECT NO.
CADD STDS. AECOM

SDT-04
SHEET OF -

DWG: V:\PASO ROBLES\60264606-WTP\000 CAD\PLANSET\4-STRUCT\SDT-04.dwg Layout Name: SDT-04 - Plotted by: Rodriguez, David Date: 11/28/2012 - 4:35 PM
XREFS: G-BD-PR IMAGES: CITY OF PASO LOGO_1.png

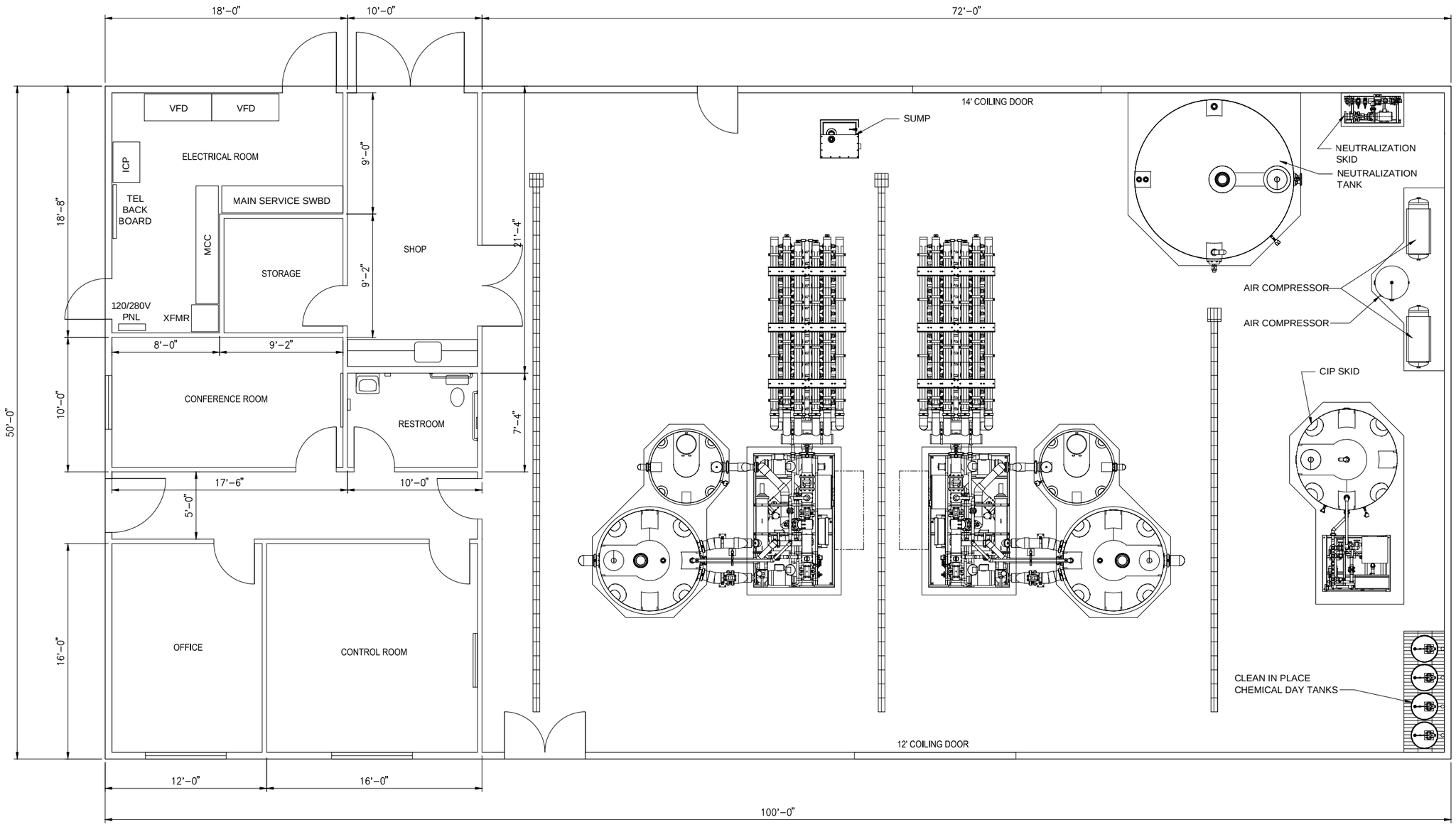

PRELIMINARY
30% SUBMITTAL

0 1/2 1
IF THIS BAR DOES NOT MEASURE 1" THEN DRAWING IS NOT TO FULL SCALE

REV	DATE	DESCRIPTION	APPR
1			
2			
3			
4			

PROJECT ENGINEER | REG NUMBER | EXP DATE

AECOM
AECOM
1194 PACIFIC STREET, SUITE 204
SAN LUIS OBISPO, CA 93401
T 805.542.9840 F 805.542.9990
www.aecom.com

CITY OF EL PASO DE ROBLES
WATER TREATMENT PLANT PROJECT

MEMBRANE BUILDING FLOOR PLAN

DESIGNED:
DETAILED:
CHECKED:
APPROVED:
DATE: November 2012
AECOM PROJECT NO. 60264606
P.R. PROJECT NO.
CADD STDS. AECOM

A00-01
SHEET
- OF -

DWG: V:\PASO ROBLES\60264606-WTP\000 CAD\PLANSET\ARCH\A00-01.dwg Layout Name: Layout1 - Plotted by: Rodriguez, David Date: 11/28/2012 - 3:56 PM
XREFS: G-BD-PR - A-FP-MEMB IMAGES: CITY OF PASO LOGO_1.png -

ELECTRICAL SYMBOLS - PLANS

SYMBOL	DESCRIPTION
DXXXX PXXXX TXXXX AXXXX FXXXX LXXXX MXXXX CXXXX	CONDUIT DESIGNATION: (SEE CONDUIT SCHEDULE) P = POWER D = DISCRETE A = ANALOG T = TELEPHONE F = FIBEROPTIC L = <250V CKT XXXX = CONDUIT REF. SP = SPARE, 1"CO. UON M = MANUFACTURER-SUPPLIED CABLE C = DATA (CAT6) CKT = CIRCUIT
	FLUORESCENT FIXTURE – CIRCLE INDICATES OUTLET, CEILING MOUNTED
	AUXILIARY LIGHT
	POLE MOUNTED LIGHTING FIXTURE & LIGHTING PULLBOX
	WALL MOUNTED LIGHTING FIXTURE
	POLE MOUNTED LIGHTING FIXTURES (2 PER POLE) & LIGHTING PULL BOX
A XX	FIXTURE TYPE – XX = FIXTURE WATTAGE (SEE LIGHTING FIXTURE SCHEDULE ON DWG. EDT-04)
PB01	GROUP OF PULLBOXES PB01 = REFERENCE OF GROUP QUANTITY AND TYPE PER PULLBOX SCHEDULE
PB-L	LIGHTING PULLBOX. SEE DWG EDT-03
XX	DUCTBANK UNDERGROUND XX = DUCTBANK REF. (SEE DUCTBANK SCHEDULE DWGS E-14,15)
	CONDUIT IN SLAB OR UNDERGROUND AS APPLICABLE
	CONDUIT EXPOSED, CONCEALED ABOVE SUSPENDED CEILING
G	GROUNDING ELECTRODE
FA	3/4" CONDUIT & WIRES FOR FIRE ALARM SYSTEM
HVAC	3/4" CONDUIT UNDER ELECTRICAL, CONTROL WIRES UNDER HVAC WORKS
	CONDUIT BODY WHERE ONE FLEXIBLE CONDUIT IS SHOWN OR REQUIRED. JBOX WHERE MORE THAN ONE FLEXIBLE CONDUIT IS SHOWN OR REQUIRED.
	CONDUIT BENDS TOWARD OBSERVER.
	CONDUIT BENDS AWAY FROM OBSERVER
1	HOMERUN TO PANEL, CIRCUIT 1
XXXX	CONTINUED TO EQUIPMENT LISTED UNDER "FROM" COLUMN OF CONDUIT SCHEDULE
	STUB-OUT & CAP
E-2 a	CONTINUED ON REFERENCED DRAWING BEYOND THE TILDE SYMBOL a REFERENCE OF CONTINUATION WHERE USED
a 2	CONTINUED ON REFERENCED DRAWING. a REFERENCE OF CONTINUATION. ARROW INDICATES DIRECTION OF CONTINUATION ON THE OTHER DRAWING BEYOND THE TILDE SYMBOL
1	SEE NOTE INDICATED

ELECTRICAL SYMBOLS - PLANS (CONT.)

SYMBOL	DESCRIPTION
	DUPLEX RECEPTACLE, +12" UON. SEE GENERAL NOTE 4.
G	DUPLEX RECEPTACLE, GFCI +12" UON. SEE GENERAL NOTE 4.
S Z1	FIRE ALARM AUTOMATIC SMOKE DETECTOR Z1 – ZONE REFERENCE
B	FIRE ALARM STROBE/HORN
FAC	FIRE ALARM CONTROL PANEL
F Z1	MANUAL FIRE STATION Z1 – ZONE REFERENCE
DS	DUCT SMOKE DETECTOR
T	ROOM THERMOSTAT BY HVAC INSTALLER
M	MOTORIZED ACTUATOR
$	SINGLE POLE LIGHTING SWITCH, +48" UON SEE GENERAL NOTE 4
$2	2-POLE LIGHTING SWITCH, +48" UON SEE GENERAL NOTE 4
$3	3-WAY LIGHTING SWITCH, +48" UON SEE GENERAL NOTE 4
$4	4-WAY LIGHTING SWITCH, +48" UON SEE GENERAL NOTE 4
$abc	1-POLE 3-GANG LIGHTING SWITCH. SEE GENERAL NOTE 4. abc – REF. OF LIGHTS CONTROLLED
$M	MANUAL STARTER
	NON-FUSED DISCONNECT SWITCH. SEE SINGLE LINE DIAGRAM FOR RATINGS
	PANELBOARD
	LOCAL CONTROL SWITCH UON. MOUNTED ON A C-CHANNEL SUPPORT
	TELEPHONE OUTLET, +12" UON
	DATA OUTLET, +12" UON
	C-CHANNEL SUPPORT WITH BACKPLATE. SEE DETAIL 3/EDT-01
J	FLEXIBLE CONDUIT CONNECTION
FOES	FIBER OPTIC ETHERNET SWITCH
TTC	TELEPHONE TERMINAL CABINET
FOPP	FIBEROPTIC PATCH PANEL
	RECEPTACLE. CONFIGURATION AND RATING AS NOTED

ELECTRICAL SYMBOLS - SINGLE LINE DIAGRAM

SYMBOL	DESCRIPTION
	POWER TRANSFORMER
	FUSE
	GROUND
10	MOTOR, 10 HORSEPOWER
100A/3P	CIRCUIT BREAKER, 3P – 3-POLE. 100A – 100 AMPERES.
100A/MCP	MOTOR CIRCUIT PROTECTOR 100A-1 CONTINUOUS RATING
	CURRENT TRANSFORMER
	CONTACTOR
1	STARTER, 1 – NEMA SIZE
	POTENTIAL TRANSFORMER
	DRY-TYPE TRANSFORMER
VFD	VARIABLE FREQUENCY DRIVE
PM	POWER MONITORING DEVICE
M	UTILITY METER
SPD	SURGE PROTECTIVE DEVICE
	NON-FUSED DISCONNECT SWITCH, 480V, 30A, 3P, UON
I	CUBICLE OR SECTION. REFERENCE AS SHOWN ON EQUIPMENT ELEVATION
TWH	TANKLESS WATER HEATER

ELECTRICAL SYMBOLS - SCHEMATIC DIAGRAMS

NORMALLY OPEN	NORMALLY CLOSED	DEVICE
		CONTACT
		TIMED CONTACT – CONTACT ACTION RETARDED ON ENERGIZATION
		TIMED CONTACT – CONTACT ACTION RETARDED ON DEENERGIZATION
		PUSHBUTTON, SINGLE CIRCUIT, MOMENTARY CONTACT
		PUSHBUTTON, SINGLE CIRCUIT, MAINTAINED CONTACT. LOS – LOCKOUT STOP
		LIMIT SWITCH, TORQUE SWITCH
		LIQUID LEVEL SWITCH
		PRESSURE SWITCH
		THERMOSTAT, TEMPERATURE SWITCH
		FLOW SWITCH
		SELECTOR SWITCH
		FUSE
O/L'S		MOTOR OVERLOAD HEATER CONTACTS
A		PILOT LIGHT, R=RED, W=WHITE, G=GREEN, A=AMBER
W		PILOT LIGHT, PUSH-TO-TEST, R=RED, W=WHITE, G=GREEN, A=AMBER
R		RELAY, CR-CONTROL RELAY, AR-ALARM RELAY
TD		TIME DELAY RELAY. TIME DELAY ON ENERGIZATION
TD TDOD		TIME DELAY RELAY. TIME DELAY ON DEENERGIZATION
M		STARTER COIL
S		SOLENOID OPERATED VALVE
ETM		ELAPSED TIME METER
		CONTROL POWER TRANSFORMER
		GROUND
		WIRING IN MOTOR STARTER, UON
		FIELD WIRING
		WIRE TERMINAL IN MOTOR STARTER
		MOTOR ANTICONDENSATION HEATER

ABBREVIATIONS

A	AMPERES
AFF	ABOVE FINISHED FLOOR
AFG	ABOVE FINISHED GRADE
CKT	CIRCUIT
CO	CONDUIT ONLY
CP	CONTROL PANEL
CPT	CONTROL POWER TRANSFORMER
CR	CARD READER SYSTEM
CRC	CARD READER CONTROLLER
CW	COOL WHITE
DB	DUCT BANK
DWG	DRAWING
ELEC	ELECTRICAL
F	FLUORESCENT
FA	FIRE ALARM
FACP	FIRE ALARM CONTROL PANEL
FOPP	FIBER OPTIC PATCH PANEL
G	GROUND FAULT INTERRUPTER
GCS	GATE CONTROL STATION
GFI	GROUND FAULT INTERRUPTER
GICS	GATE INTERPHONE CALL STATION
GND	GROUND
GOB	GATE OPEN BUTTON
GOCP	GATE OPERATOR CONTROL PANEL
HID	HIGH INTENSITY DISCHARGE
HOA	HAND OFF AUTOMATIC
HPS	HIGH PRESSURE SODIUM
ICP	INSTRUMENTATION CONTROL PANEL
INSTR	INSTRUMENTATION
IWH	INSTANTANEOUS WATER HEATER
JB	JUNCTION BOX
JBOX	JUNCTION BOX
kcmil	THOUSAND CIRCULAR MILS
KVA	KILO VOLT-AMPERE
LCP	LOCAL CONTROL PANEL
LOS	LOCKOUT SWITCH
LV	LOW VOLTAGE
MAX	MAXIMUM
NC	NORMALLY CLOSED
NIC	NOT IN CONTRACT
NO	NORMALLY OPEN
NTS, NS	NOT TO SCALE
O/C	OPEN/CLOSE
OL'S	OVERLOADS
PB	PULLBOX
PG&E	PACIFIC GAS & ELECTRIC
PNL	PANEL
PT	POTENTIAL TRANSFORMER
PWR	POWER
QTY	QUANTITY
REF	REFERENCE
SCCR	SHORT CIRCUIT CURRENT RATING
SEC	SECOND
SIM	SIMILAR
SP	SPARE
TDB	TELEPHONE DATA BACKBOARD
TEMP	TEMPERATURE
TJB	TERMINAL JUNCTION BOX
TSP	TWISTED SHIELDED PAIR
TST	TWISTED SHIELDED TRIAD
TTC	TELEPHONE TERMINAL CABINET
TYP	TYPICAL
UON	UNLESS OTHERWISE NOTED
UPS	UNINTERRUPTIBLE POWER SUPPLY
V	VOLT
VD	VEHICLE DETECTOR
VFD	VARIABLE FREQUENCY DRIVE
VS	VARIABLE SPEED
W	WATT
WP	WEATHERPROOF
WW	WARM WHITE
XFMR	TRANSFORMER
Z1	FIRE ALARM ZONE REFERENCE

GENERAL NOTES:

1. NOT ALL SYMBOLS AND/OR ABBREVIATIONS INCLUDED IN THIS SHEET ARE NECESSARILY USED IN THIS PROJECT.
2. WIRE QUANTITY IN CIRCUITS ASSOCIATED WITH PANELBOARDS ARE NOT SHOWN. PROVIDE QUANTITY OF WIRES AS REQUIRED. MINIMUM CONDUCTOR SIZES SHALL BE #12 WITH A #12 GND, UNLESS LARGER SIZES ARE NOTED, SUCH AS FOR AREA LIGHTING WHERE CONDUCTOR SIZES ARE CALLED OUT IN DRAWING EDT-03 AND SOME OTHER AREA LIGHTS CONDUCTOR SIZES OF WHICH ARE INDICATED IN THE RELEVANT PANELBOARD SCHEDULES.
3. INSTRUMENTS ARE SHOWN IN THEIR GENERAL VICINITY AND MAY NOT NECESSARILY MATCH LOCATIONS SHOWN ON THE MECHANICAL SHEETS. VERIFY ACTUAL LOCATIONS OF INSTRUMENTS AND RUN ASSOCIATED CONDUITS ACCORDINGLY.
4. ALL RECEPTACLE & SWITCH INSTALLATION HEIGHTS SHALL COMPLY WITH REQUIREMENTS OF SECTION 1117B.6 (2007 CALIFORNIA BUILDING CODE).
5. BOND MAGNETIC FLOW SENSOR AND ADJOINING PIPES PER MANUFACTURER'S RECOMMENDED METHOD, BASED ON PIPE TYPE AND CATHODIC PROTECTION OF PIPES WHERE APPLICABLE.
6. CONDUIT STUB-UPS SERVING EQUIPMENT SUCH AS MOTORS SHALL BE LOCATED AS CLOSE TO THE EQUIPMENT AS PRACTICABLE. EXTEND STUBBED-UP CONDUITS TO HEIGHTS THAT WOULD LIMIT FLEX CONDUIT LENGTHS TO 5 FEET. USE UNISTRUT SUPPORTS FOR THE STUBBED-UP CONDUIT AS REQUIRED BY NEC.
7. RECORD DRAWINGS SHALL SHOW OFFSET DISTANCES OF UNDERGROUND CONDUITS FROM FIXED ABOVE-GRADE OBJECTS SUCH AS FENCES, BUILDINGS, OR FROM UNDERGROUND MAJOR PIPING.

ELECTRIC UTILITY CONTACT

COMPANY: –
ADDRESS: –
–
–

CONTACT: –
TEL.: –
FAX: –
EMAIL: –

PRELIMINARY 30% SUBMITTAL

0 1/2 1
IF THIS BAR DOES NOT MEASURE 1" THEN DRAWING IS NOT TO FULL SCALE

REV	DATE	PROJECT ENGINEER	DESCRIPTION	REG NUMBER	EXP DATE	APPR

AECOM
AECOM
1194 PACIFIC STREET, SUITE 204
SAN LUIS OBISPO, CA 93401
T 805.542.9840 F 805.542.9990
www.aecom.com

CITY OF EL PASO DE ROBLES
WATER TREATMENT PLANT PROJECT

ELECTRICAL LEGEND AND ABBREVIATIONS

DESIGNED:
DETAILED:
CHECKED:
APPROVED:
DATE: November 2012
AECOM PROJECT NO. 60264606
P.R. PROJECT NO.
CADD STDS. AECOM

E00-01
SHEET
- OF -

DWG: V:\PASO ROBLES\60264606-WTP\000 CAD\PLANSET\6-ELEC\E00-01.dwg Layout Name: E00-01 – Plotted by: Rodriguez, David Date: 11/28/2012 – 3:58 PM
XREFS: C-BD-PR IMAGES: CITY OF PASO LOGO_1.png –

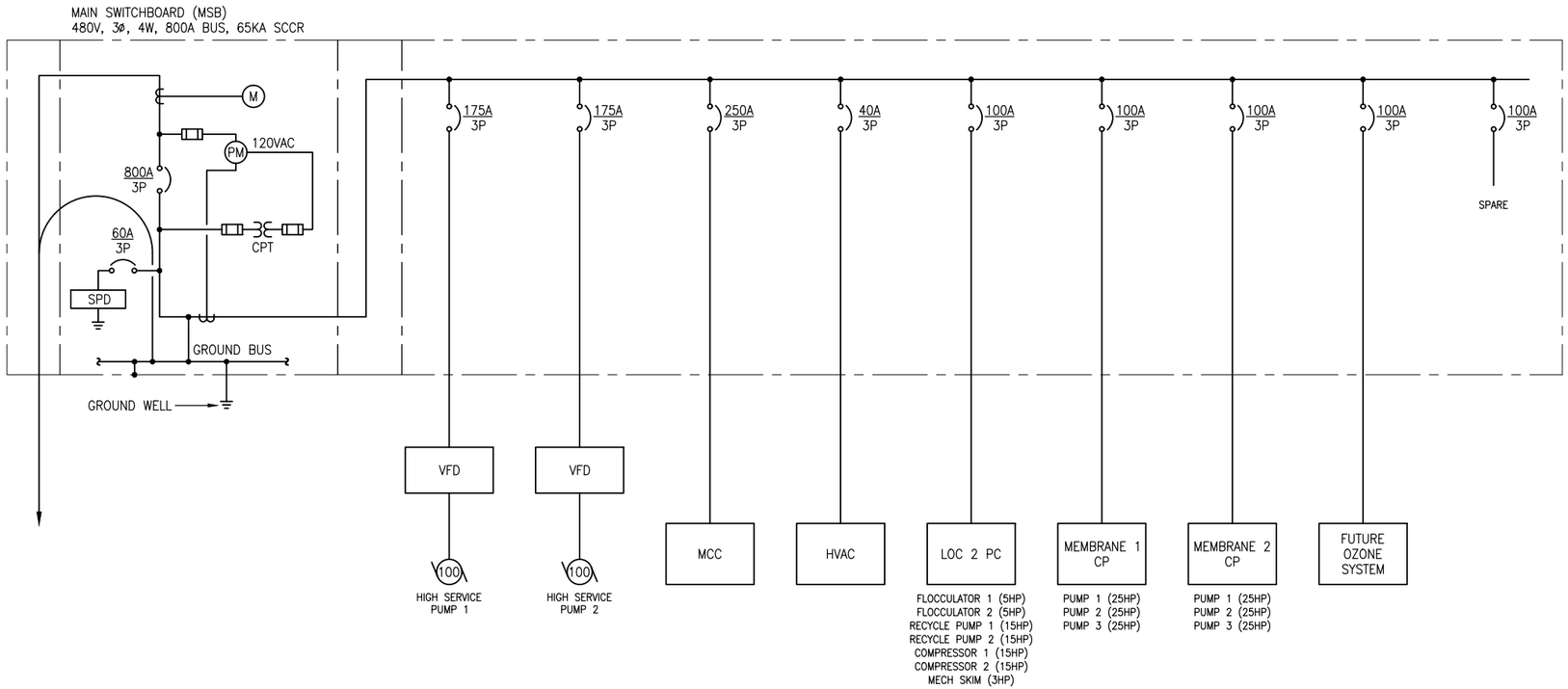

MSB SINGLE LINE DIAGRAM

1
-

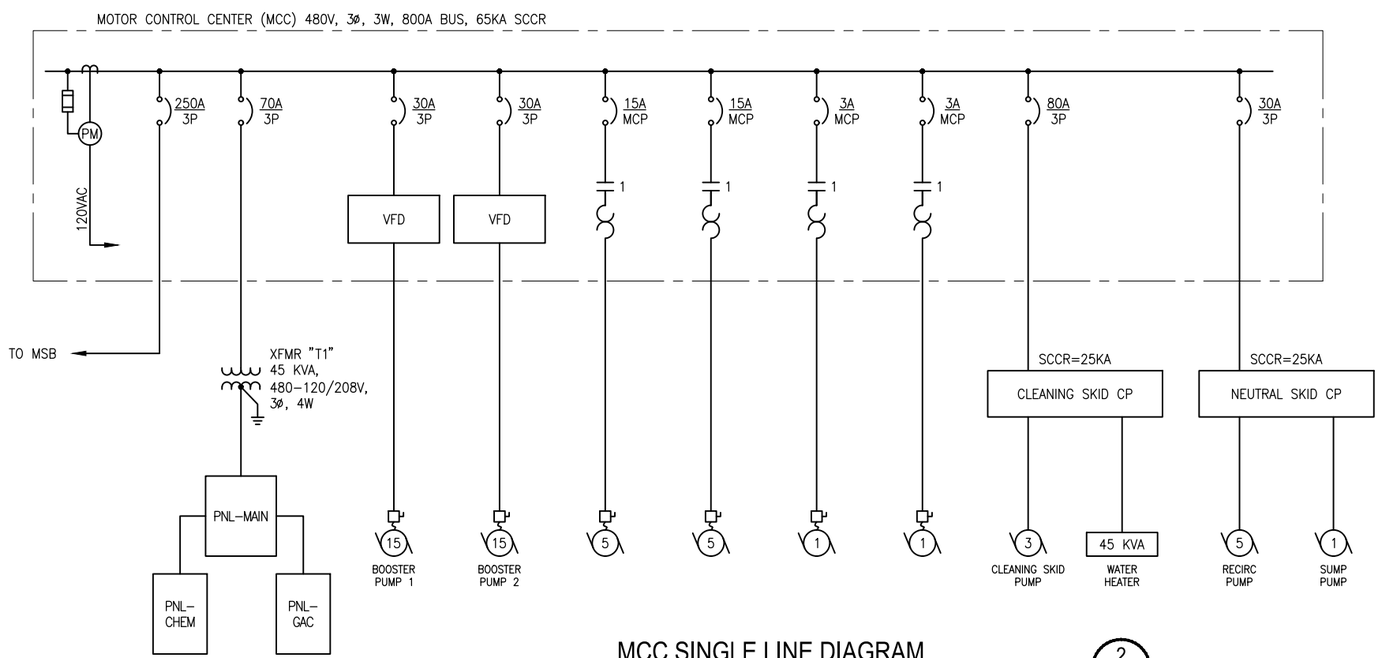

MCC SINGLE LINE DIAGRAM

2
-

PRELIMINARY
30% SUBMITTAL

0 1/2 1
IF THIS BAR DOES NOT MEASURE 1" THEN DRAWING IS NOT TO FULL SCALE

REV	DATE	DESCRIPTION	APPR

PROJECT ENGINEER | REG NUMBER | EXP DATE

AECOM
AECOM
1194 PACIFIC STREET, SUITE 204
SAN LUIS OBISPO, CA 93401
T 805.542.9840 F 805.542.9990
www.aecom.com

CITY OF EL PASO DE ROBLES
WATER TREATMENT PLANT PROJECT

SINGLE LINE DIAGRAMS

DESIGNED:
DETAILED:
CHECKED:
APPROVED:
DATE: November 2012
AECOM PROJECT NO. 60264606
P.R. PROJECT NO.
CADD STDS. AECOM

E00-02
SHEET
- OF -

DWG: V:\PASO ROBLES\60264606-WTP\000 CAD\PLANSET\6-ELEC\E00-02.dwg Layout Name: E00-02 - Plotted by: Rodriguez, David Date: 11/28/2012 - 3:58 PM
XREFS: G-BD-PR IMAGES: CITY OF PASO LOGO_1.png -

LOAD DESCRIPTION	HP (KVA IF NOT NOTED)	VOLTAGE	PHASE	CON NECTED LOADS (KVA)	MAXIMUM DEMAND (KVA)	MAXIMUM DEMAND (AMPS)
MCC	114	480	3	114	114	137
HVAC	15	480	3	15	15	18
LOC 2 CP	52	480	3	52	52	62
MEMBRANE 1 CP	57	480	3	57	57	68
MEMBRANE 2 CP	57	480	3	57	57	68
(FUTURE) OZONE SYSTEM	50	480	3	50	50	60
HIGH SERVICE PUMP 1	100 HP	480	3	103	103	124
HIGH SERVICE PUMP 2	100 HP	480	3	103	103	124
MSB	**550**	**480**	**3**	**550**	**440**	**529**
CLEANING SKID CP	49	480	3	49	49	59
NEUTR SKID CP	8.1	480	3	8.1	8.1	9.7
XFMR-T1	6.1	480	3	6.1	6.1	7.4
RESID BASIN 1 PUMP 1	5 HP	480	3	6.3	6.3	7.6
RESID BASIN 1 PUMP 2	5 HP	480	3	6.3	6.3	7.6
RESID BASIN 2 PUMP 1	1 HP	480	3	1.7	1.7	2.1
RESID BASIN 2 PUMP 2	1 HP	480	3	1.7	1.7	2.1
BOOSTER PUMP 1	15 HP	480	3	17	17	21
BOOSTER PUMP 2	15 HP	480	3	17	17	21
MCC	**114**	**480**	**3**	**114**	**114**	**137**
MEMBRANE 1 PUMP 1	25 HP	480	3	28	28	34
MEMBRANE 1 PUMP 2	25 HP	480	3	28	28	34
MEMBRANE 1 PUMP 3	25 HP	480	3	0.0	0.0	0.0
MEMBRANE 1 CP	**57**	**480**	**3**	**57**	**57**	**68**
MEMBRANE 2 PUMP 1	25 HP	480	3	28	28	34
MEMBRANE 2 PUMP 2	25 HP	480	3	28	28	34
MEMBRANE 2 PUMP 3	25 HP	480	3	0.0	0.0	0.0
MEMBRANE 2 CP	**57**	**480**	**3**	**57**	**57**	**68**
FLOCCULATOR 1	5 HP	480	3	6.3	6.3	7.6
FLOCCULATOR 2	5 HP	480	3	6.3	6.3	7.6
RECYCLE PUMP 1	15 HP	480	3	17	17	21
RECYCLE PUMP 2	15 HP	480	3	0.0	0.0	0.0
COMPRESSOR 1	15 HP	480	3	17	17	21
COMPRESSOR 2	15 HP	480	3	0.0	0.0	0.0
MECHANICAL SKIM	3 HP	480	3	4.0	4.0	4.8
LOC 2 CP	**52**	**480**	**3**	**52**	**52**	**62**

LOAD TABULATION 1 -

PRELIMINARY 30% SUBMITTAL

0 1/2 1

IF THIS BAR DOES NOT MEASURE 1" THEN DRAWING IS NOT TO FULL SCALE

REV	DATE	DESCRIPTION	APPR

PROJECT ENGINEER REG NUMBER EXP DATE

AECOM
1194 PACIFIC STREET, SUITE 204
SAN LUIS OBISPO, CA 93401
T 805.542.9840 F 805.542.9990
www.aecom.com

CITY OF EL PASO DE ROBLES
WATER TREATMENT PLANT PROJECT

LOAD TABULATION

DESIGNED:
DETAILED:
CHECKED:
APPROVED:
DATE: November 2012
AECOM PROJECT NO. 60264606
P.R. PROJECT NO.
CADD STDS. AECOM

E00-03
SHEET
- OF -

DWG: V:\PASO ROBLES\60264606-WTP\000 CAD\PLANSET\G-ELEC\E00-03.dwg Layout Name: E00-03 - Plotted by: Rodriguez, David Date: 11/28/2012 - 3:59 PM
XREFS: G-BD-PR IMAGES: CITY OF PASO LOGO_1.png -

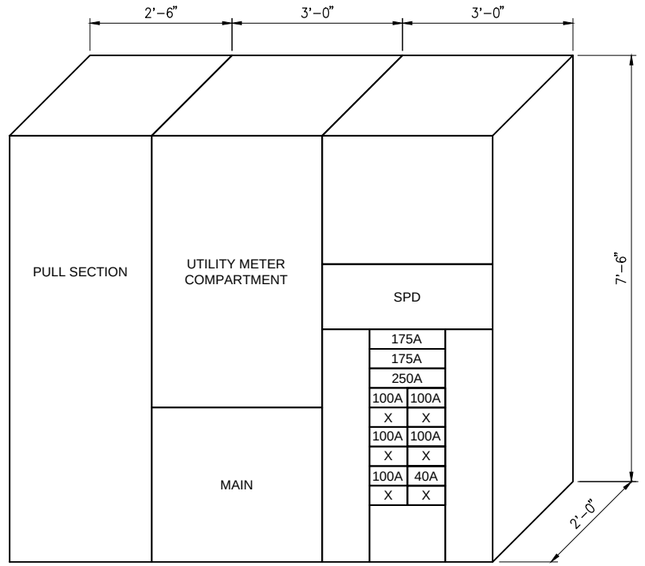

MSB ELEVATION

SCALE: 3/4" = 1'

1
-

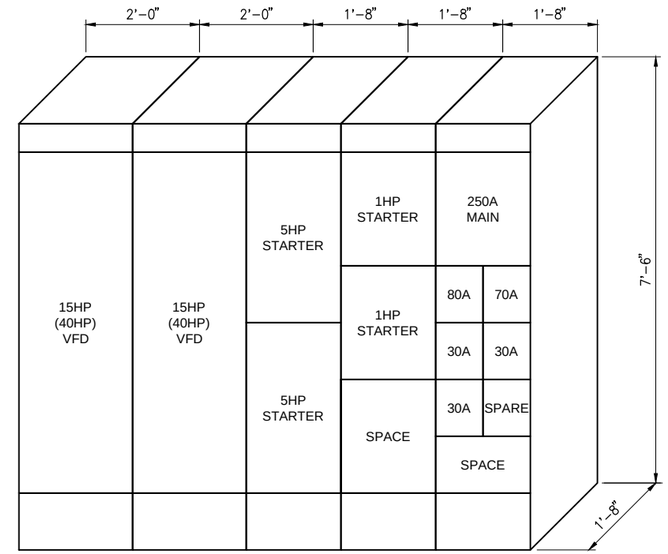

MCC ELEVATION

SCALE: 3/4" = 1'

2
-

PRELIMINARY
30% SUBMITTAL

0 1/2 1
IF THIS BAR DOES NOT MEASURE 1" THEN DRAWING IS NOT TO FULL SCALE

REV	DATE	DESCRIPTION	APPR

PROJECT ENGINEER | REG NUMBER | EXP DATE

AECOM
1194 PACIFIC STREET, SUITE 204
SAN LUIS OBISPO, CA 93401
T 805.542.9840 F 805.542.9990
www.aecom.com

CITY OF EL PASO DE ROBLES
WATER TREATMENT PLANT PROJECT

MCC AND MSB ELEVATIONS

DESIGNED:
DETAILED:
CHECKED:
APPROVED:
DATE: November 2012
AECOM PROJECT NO. 60264606
P.R. PROJECT NO.
CADD STDS. AECOM

E00-04
SHEET
- OF -

DWG: V:\PASO ROBLES\60264606-WTP\000 CAD\PLANSET\G-ELEC\E00-04.dwg Layout Name: E00-04 - Plotted by: Rodriguez, David Date: 11/28/2012 - 3:59 PM
XREFS: G-BD-PR IMAGES: CITY OF PASO LOGO_1.png -

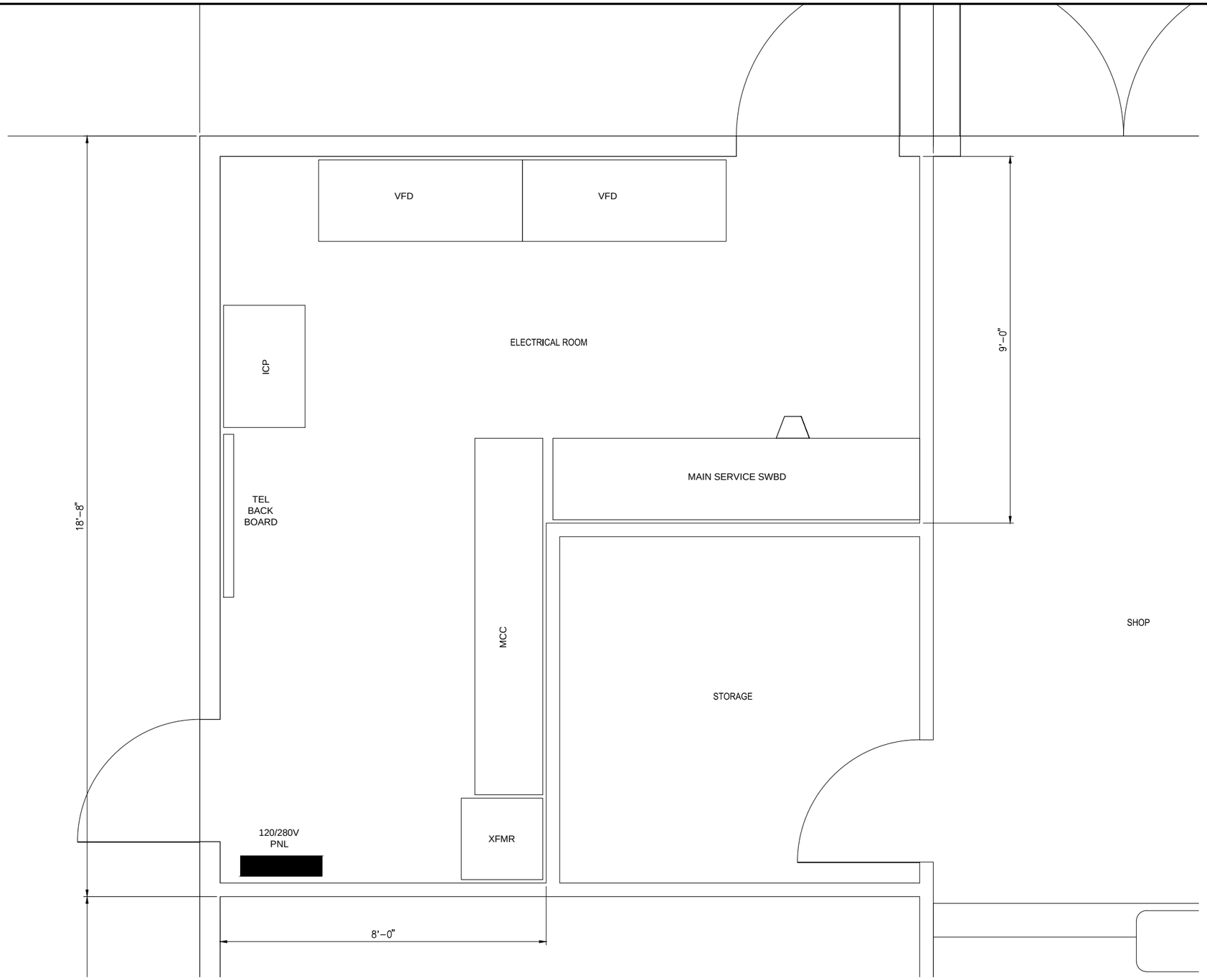

ELECTRICAL ROOM 1
SCALE: 3/4" = 1'

PRELIMINARY
30% SUBMITTAL

0 1/2 1
IF THIS BAR DOES NOT MEASURE 1" THEN DRAWING IS NOT TO FULL SCALE

REV	DATE	DESCRIPTION	APPR

PROJECT ENGINEER REG NUMBER EXP DATE

AECOM
AECOM
1194 PACIFIC STREET, SUITE 204
SAN LUIS OBISPO, CA 93401
T 805.542.9840 F 805.542.9990
www.aecom.com

CITY OF EL PASO DE ROBLES
WATER TREATMENT PLANT PROJECT

MEMBRANE BUILDING ELECTRICAL ROOM

DESIGNED:
DETAILED:
CHECKED:
APPROVED:
DATE: November 2012
AECOM PROJECT NO. 60264606
P.R. PROJECT NO.
CADD STDS. AECOM

E00-05
SHEET
- OF -

DWG: V:\PASO ROBLES\60264606-WTP\000 CAD\PLANSET\6-ELEC\E00-05.dwg Layout Name: E00-05 - Plotted by: Rodriguez, David Date: 11/28/2012 - 4:00 PM
XREFS: G-BD-PR - A-FP-MEMB IMAGES: CITY OF PASO LOGO_1.png -

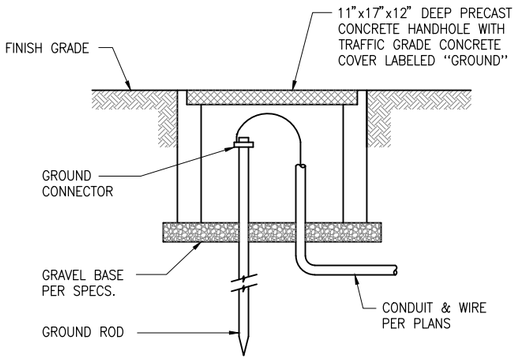

GROUND WELL DETAIL (1 / -)

NOT TO SCALE

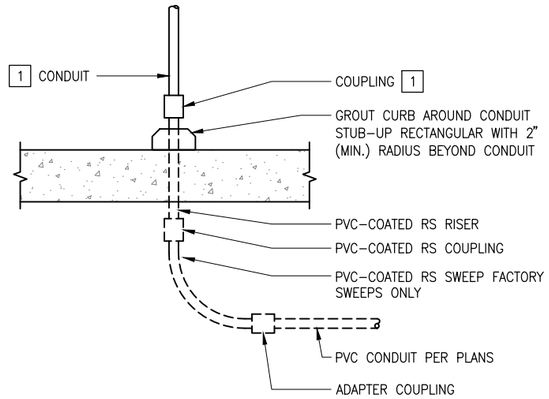

EXPOSED CONDUIT STUB-UP DETAIL (2 / -)

NOT TO SCALE

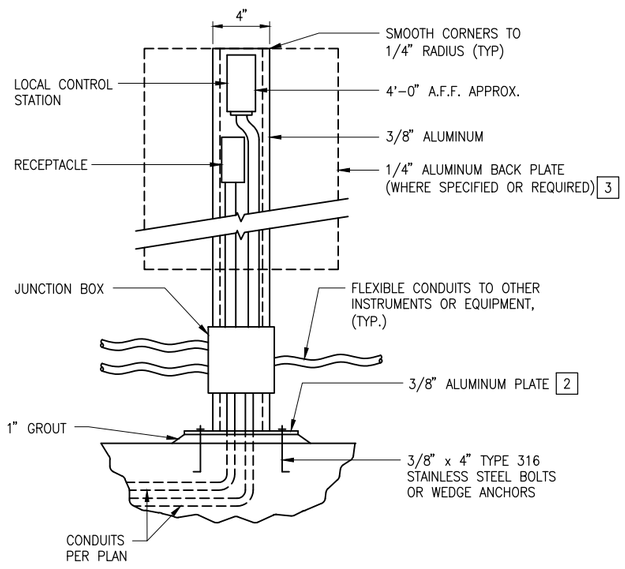

FIELD CONTROL STATION DETAIL (3 / -)

NOT TO SCALE

NOTES:

1. TYPE OF CONDUIT AND FITTING PER SPECS.
2. BOTTOM OF PLATE SHALL BE COATED WITH SYSTEM 54 COATING PER PAINTING SPECIFICATIONS SECTION 099000.
3. DIMENSIONS AS REQUIRED.

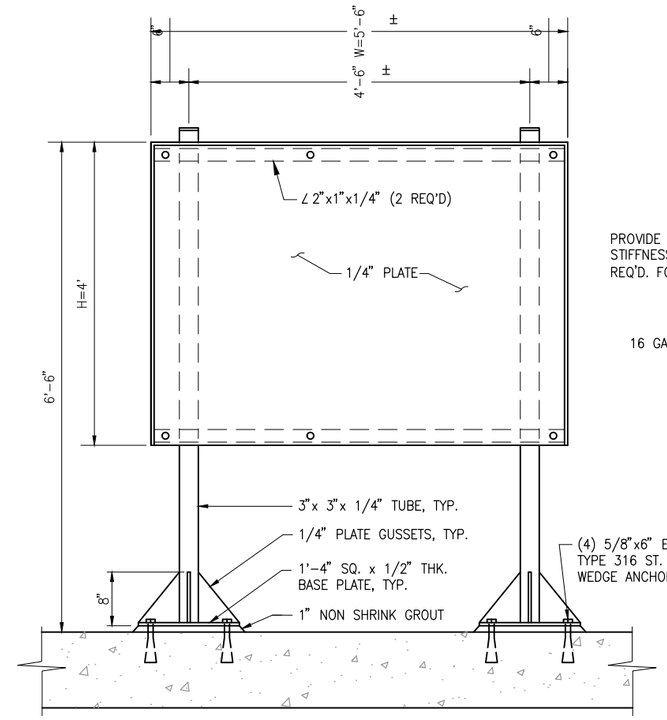

SECTION (A / —)

SCALE: 1" = 1'-0"

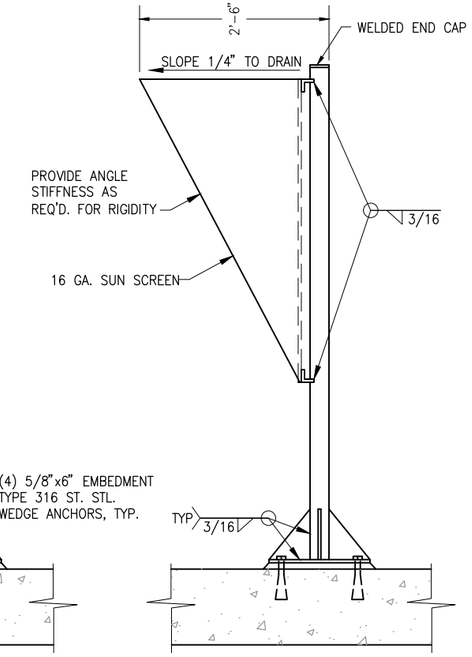

SECTION (B / —)

SCALE: 1" = 1'-0"

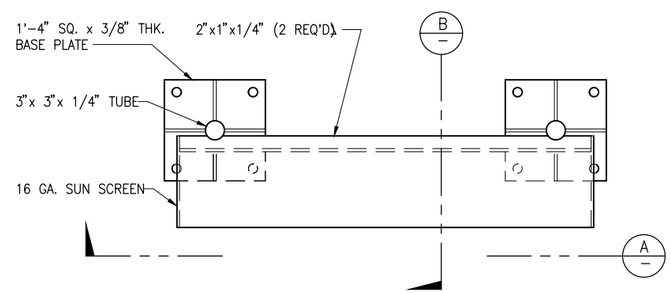

MISC. EQUIPMENT SUPPORT DETAIL (4 / -)

NOT TO SCALE

PRELIMINARY 30% SUBMITTAL

0 1/2 1

IF THIS BAR DOES NOT MEASURE 1" THEN DRAWING IS NOT TO FULL SCALE

REV	DATE	DESCRIPTION	APPR

PROJECT ENGINEER | REG NUMBER | EXP DATE

AECOM
1194 PACIFIC STREET, SUITE 204
SAN LUIS OBISPO, CA 93401
T 805.542.9840 F 805.542.9990
www.aecom.com

CITY OF EL PASO DE ROBLES
WATER TREATMENT PLANT PROJECT

ELECTRICAL DETAILS (1 OF 4)

DESIGNED:
DETAILED:
CHECKED:
APPROVED:
DATE: November 2012
AECOM PROJECT NO. 60264606
P.R. PROJECT NO.
CADD STDS. AECOM

E00-06
SHEET - OF -

DWG: V:\PASO ROBLES\60264606-WTP\000 CAD\PLANSET\G-ELEC\E00-06.dwg Layout Name: E00-06 - Plotted by: Rodriguez, David Date: 11/28/2012 - 4:00 PM
XREFS: G-BD-PR IMAGES: CITY OF PASO LOGO_1.png -

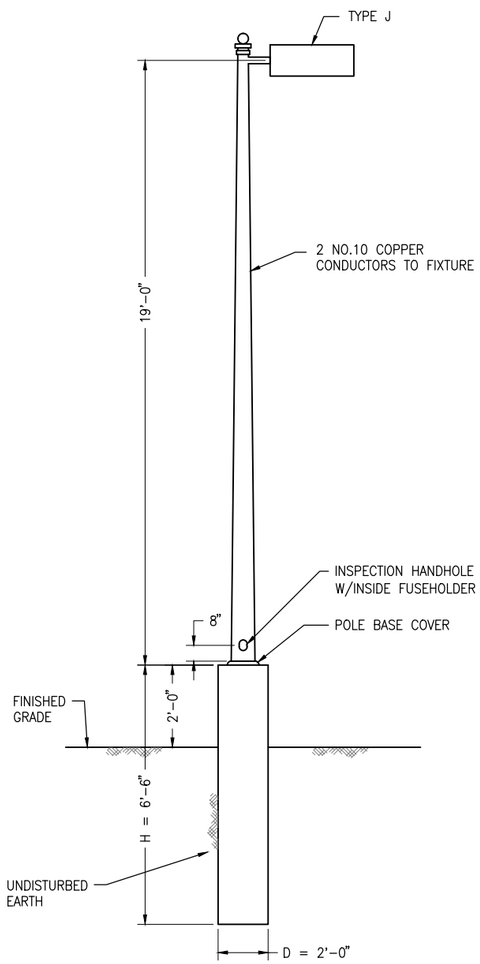

ELEVATION

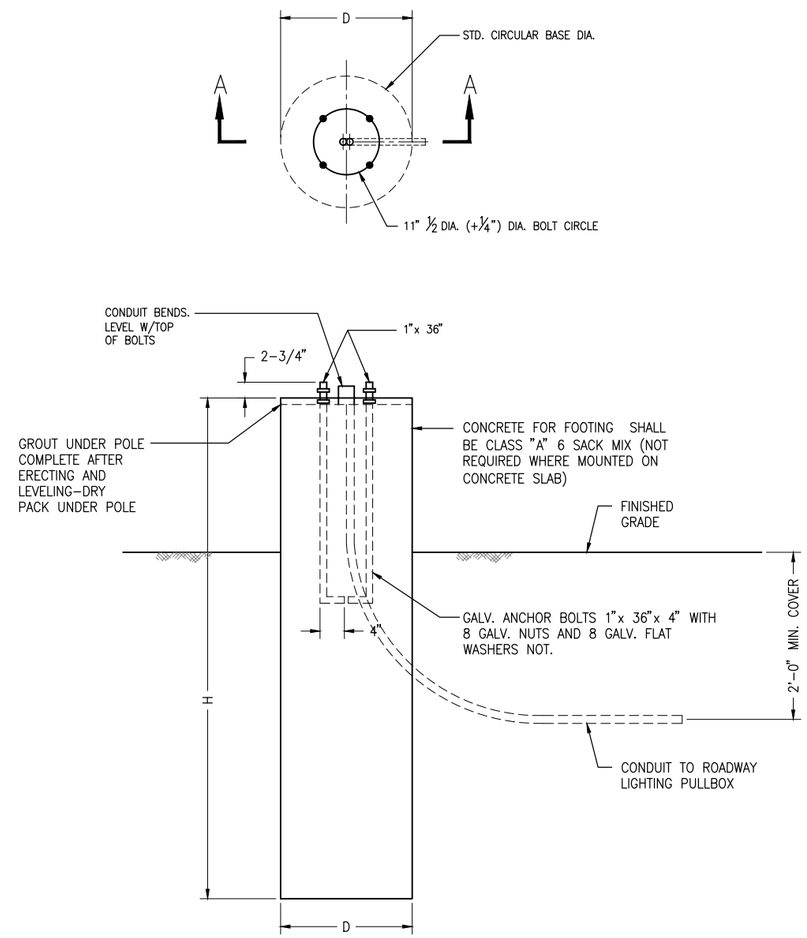

SECTION A-A
FOUNDATION

ROADWAY LIGHT INSTALLATION

NOT TO SCALE

1
-

ROADWAY LIGHTING GENERAL NOTES

1. SCHEDULE 80 P.V.C. SHALL BE USED IN ALL LOCATIONS. ALL ROADWAY CROSSINGS SHALL BE INSTALLED PERPENDICULAR TO CURB LINE (NO ANGLE CROSSINGS SHALL BE PERMITTED).
2. MINIMUM WIRE SIZE IN UNDERGROUND CONDUIT SHALL BE NO. 8 COPPER; WHERE MULTIPLE FIXTURES AND EXTENDED DISTANCES ON ONE CIRCUIT ARE USED, THE FIXTURE CONNECTIONS AND SPLICES SHALL BE MADE IN PULL BOXES.
3. METAL POLES SHALL BE GROUNDED AS REQUIRED BY NEC ART. #410.21 AND 250.68(B). ARTICLE 410.21.
4. CONTROLS SHALL BE PROVIDED FOR AUTOMATIC AND MANUAL OPERATION PER WIRING DIAGRAM SHOWN IN DETAIL 1 ON DWG. EDT-04.
5. ALL STREET LIGHT POLES AND BASE COVERS SHALL BE ALUMINUM.
6. WHERE ALUMINUM COMES IN CONTACT WITH CONCRETE, COAT SURFACE AS SPECIFIED IN SPEC. SECTION 260500.
7. CONTRACTOR SHALL SUBMIT ACCURATE AS-BUILT DRAWINGS OF ALL CONDUIT PATHS, LOCATIONS OF RESPECTIVE JUNCTION (PULL) BOXES PRIOR TO ENERGIZING.
8. NO LIGHTS WILL BE ENERGIZED UNTIL THE OWNER RECEIVES ACCURATE AS-BUILT SCHEMATICS OF ALL CONDUIT PATHS.
9. ALL SPLICES SHALL BE IN APPROVED CONCRETE JUNCTION BOXES. SPLICES SHALL BE MADE WATER PROOF WHEN BELOW GRADE. PULL BOXES SHALL BE INSTALLED AT 250 FEET MAXIMUM SPACING OR 250 MAX FOR TERMINATION POINTS. SPLICE BOXES SHALL BE CHRISTY N9, CALTRANS SIZE 3 1/2, ELECTRICAL BOX OR EQUAL. A PULL BOX IS REQUIRED AT EACH POLE WITHIN 6' OF BASE.
10. OVERCURRENT PROTECTION: PROVIDE "TRON, IN LINE" BREAK-AWAY TYPE WATERPROOF FUSEHOLDERS RATED AT 30 AMPS 250 VOLTS (OR APPROVED EQUAL) WITH PROPER FUSING OF 10 AMP FUSE PER LOAD REQUIREMENTS FOR EACH STREET LIGHT WHEN INSTALLED. USE FERRAZ SHAWMUT NO. FEB-11-11-BA OR APPROVED EQUAL.
11. ALL CONDUCTORS SHALL HAVE INSULATION COLORS APPROPRIATE TO THEIR USE AND ALL APPLICABLE CODES. THE USE OF COLORED PHASE TAPE SHALL NOT BE ALLOWED.

PRELIMINARY
30% SUBMITTAL

0 1/2 1
IF THIS BAR DOES NOT MEASURE 1" THEN DRAWING IS NOT TO FULL SCALE

REV	DATE	DESCRIPTION	APPR
1			
2			
3			
4			

PROJECT ENGINEER | REG NUMBER | EXP DATE

AECOM
AECOM
1194 PACIFIC STREET, SUITE 204
SAN LUIS OBISPO, CA 93401
T 805.542.9840 F 805.542.9990
www.aecom.com

CITY OF EL PASO DE ROBLES
WATER TREATMENT PLANT PROJECT

ELECTRICAL DETAILS
(2 OF 4)

DESIGNED:
DETAILED:
CHECKED:
APPROVED:
DATE: November 2012
AECOM PROJECT NO. 60264606
P.R. PROJECT NO.
CADD STDS. AECOM

E00-07
SHEET
- OF -

DWG: V:\PASO ROBLES\60264606-WTP\000 CAD\PLANSET\6-ELEC\E00-07.dwg Layout Name: E00-07 - Plotted by: Rodriguez, David Date: 11/28/2012 - 4:00 PM
XREFS: G-BD-PR IMAGES: CITY OF PASO LOGO_1.png -

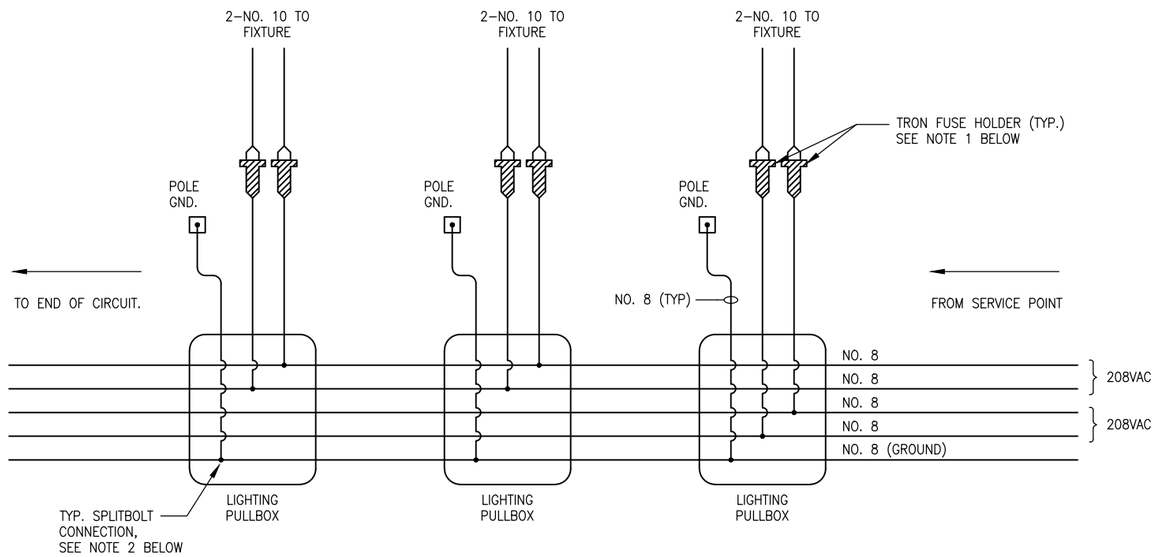

TYPICAL CONNECTION ON ONE OR MORE POLES AND/OR WALLPACKS

NOTES:

1. PROVIDE BREAK–AWAY TRON FUSE HOLDER AND 10 AMP FUSE. FERRAZ–SHAWMUT FEB–11–11–BA OR APPROVED EQUAL. LOCATE INSIDE POLE @ BEHIND HANDHOLE COVER.
2. INSULATE HOT AND GND. SPLICES AS FOLLOWS: COVER WITH 2–LAYERS RUBBER TAPE–FILLING VOIDS. APPLY 1–LAYER 1/2 LAPPED PVC TAPE. APPLY 1–LAYER FRICTION TAPE & COAT WITH AN ELECTRICAL INSULATING COATING (SKOTCHKOTE OR EQUAL).

ROADWAY LIGHT CONNECTION DIAGRAM

NOT TO SCALE

1
–

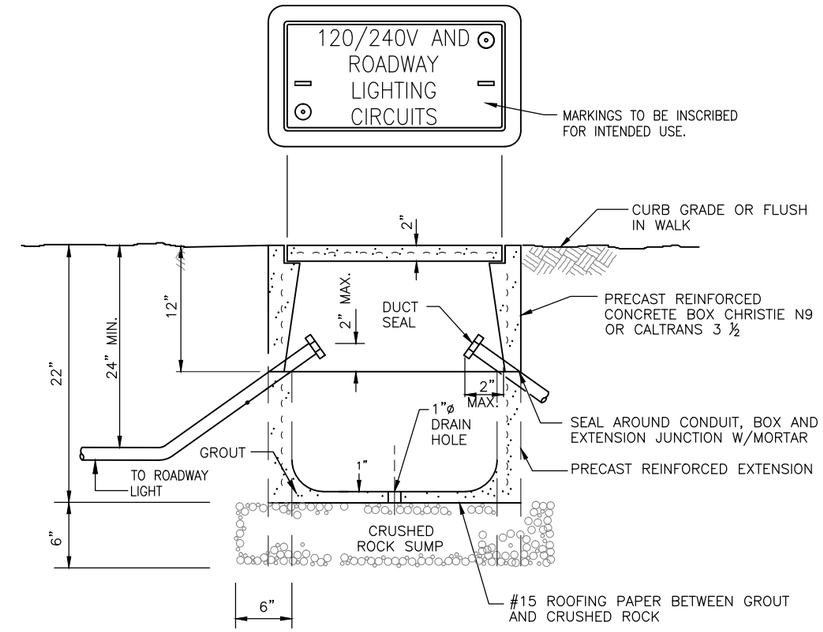

GENERAL NOTES:

1. PULL BOXES SHALL NOT BE INSTALLED OVER JOINT TRENCHES, IN DRIVEWAYS OR IN ROADWAYS.
2. REMOVE LIDS BEFORE POURING CONCRETE AROUND PULL BOXES.
3. PULL BOXES SHALL BE GROUTED PRIOR TO INSTALLATION OF CONDUCTORS, SLOPED TOWARD THE DRAIN HOLE. PLACE A LAYER OF ROOFING PAPER BETWEEN THE CRUSHED ROCK AND THE GROUT.
4. WRAP PULL BOX WITH ROOFING PAPER BEFORE BACKFILLING.
5. INSTALL A ONE–FOOT RING OF CONCRETE, FOUR INCHES DEEP, AROUND THE WRAPPED PULL BOXES INSTALLED IN DIRT OR GRASS AREAS, SLOPED TO DRAIN AWAY FROM THE PULL BOX.
6. PULL BOXES SHALL BE LEVELED TO FINISH GRADE.
7. PULL BOX COVERS SHALL BE EQUIPPED WITH HOLD DOWN BOLTS.
8. ALL PULL BOXES SHALL BE INSTALLED WITH EXTENSIONS.
9. THIS DRAWING IS REFERENCED IN DWG. E–01 GENERAL NOTES.

LIGHTING PULL BOX

NOT TO SCALE

2
–

PRELIMINARY 30% SUBMITTAL

0 1/2 1
IF THIS BAR DOES NOT MEASURE 1" THEN DRAWING IS NOT TO FULL SCALE

REV	DATE	DESCRIPTION	APPR

PROJECT ENGINEER | REG NUMBER | EXP DATE

AECOM
AECOM
1194 PACIFIC STREET, SUITE 204
SAN LUIS OBISPO, CA 93401
T 805.542.9840 F 805.542.9990
www.aecom.com

CITY OF EL PASO DE ROBLES
WATER TREATMENT PLANT PROJECT

ELECTRICAL DETAILS (3 OF 4)

DESIGNED:
DETAILED:
CHECKED:
APPROVED:
DATE: November 2012
AECOM PROJECT NO. 60264606
P.R. PROJECT NO.
CADD STDS. AECOM

E00-08
SHEET
- OF -

DWG: V:\PASO ROBLES\60264606-WTP\000 CAD\PLANSET\G-ELEC\E00-08.dwg Layout Name: E00-08 - Plotted by: Rodriguez, David Date: 11/28/2012 - 4:00 PM
XREFS: G-BD-PR IMAGES: CITY OF PASO LOGO_1.png

REF.	VOLTS	LAMPS COLOR ABBREV.	LAMPS NO.	LAMPS TYPE	LAMPS WATTS	LAMPS TUBE TYPE	LAMPS TOTAL WATTS	MOUNTING	DESCRIPTION	MANUF-ACTURERS CATALOG REF.
C	120	CW	2	F	32	T8	75	SURFACE	FLUORESCENT FIXTURE, WRAP AROUND ENCLOSURE, HOUSING FORMED FROM REINFORCED POLYESTER FIBERGLASS OR HIGH IMPACT ACRYLIC, STAINLESS-STEEL LATCHES, CLEAR PRISMATIC LEXAN LENS, SUITABLE FOR WET AND CORROSIVE LOCATIONS. UL LISTED. 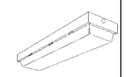	APPLETON FR SERIES LITHONIA DMW, APPLETON FR SERIES
F	208		1	CFL	42		50	WALL	DIE-CAST ALUMINUM REAR HOUSING. CAPTIVE EXTERNAL HARDWARE TREATED FOR CORROSION RESISTANCE . DARK BRONZE CORROSION-RESISTANT POLYESTER POWDER. ONE PIECE FRONT HOUSING AND REFRACTOR, INJECTION-MOLDED, UV-STABILIZED POLYCARBONATE. FRONT COVER SEALED WITH ONE-PIECE, HIGH-TEMPERATURE SILICONE GASKET. COMPACT FLUORESCENT LAMPS. UL LISTED SUITABLE FOR WET LOCATIONS	LITHONIA TWA
E	120		2	LED	5.4		11	WALL	SELF CONTAINED EXIT SIGN AND EMERGENCY LIGHT. HOUSING CONSTRUCTED OF IMPACT RESISTANT, UV STABLE, INJECTION MOLDED RLAME RETARDANT THERMOPLASTIC. 6 HIGH, 3/4" STROKE LETTERING. LED LAMPS FOR THE EXIT SIGN, 12 SERIES-PARALLEL WHITE LEDS IN EACH HEAD. THE EMERGENCY LIGHTS, MAINTENANCE FREE HIGH OUTPUT NI-CAD BATTERIES PROVIDING 90 MINUTE EMERGENCY LIGHTING, COMPLYING WITH NFPA & OSHA ILLUMINATION STANDARDS. BATTERY TEST SWITCH AND A CHARGE MONITOR INDICATOR LIGHT ON THE HOUSING. UL LISTED.	LITHONIA LHQM LED HO
J	208		1	MH	100		115	19' POLE	SHOE-BOX STYLE, HEAVY DUTY DIE CAST ALUMINUM HOUSING WITH CORROSION RESISTANT HARDWARE AND ALUMINUM FINISH. HEAT AND IMPACT RESISTANT TEMPERED FLAT GLASS LENS. . IES DISTRIBUTION TYPE MEDIUM CUTOFF TYPE III. ROUND TAPERED ALUMINUM POLE. IZOTACH ZONE OF NOT LESS THAN 110 MPHI. UL LISTED SUITABLE FOR WET LOCATIONS. 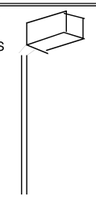	GE DSMT, LITHONIA KSF, RUUD PR

LIGHTING FIXTURE SCHEDULE

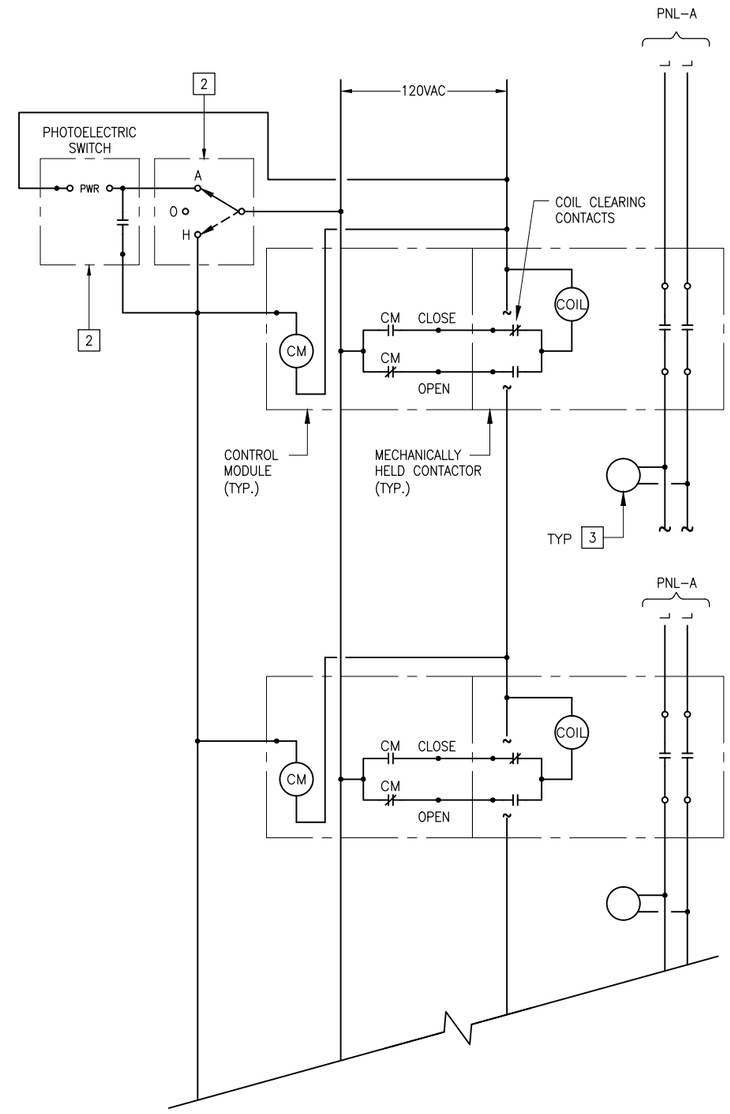

LIGHTING CONTROL PANEL WIRING DIAGRAM 1

1 / -

NOTES:

1. ALL COMPONENTS ARE PART OF THE LIGHTING CONTROL PANEL UON.
2. REMOTELY MOUNTED.
3. AREA LIGHTING.

PRELIMINARY 30% SUBMITTAL

0 1/2 1
IF THIS BAR DOES NOT MEASURE 1" THEN DRAWING IS NOT TO FULL SCALE

REV	DATE	DESCRIPTION	APPR

PROJECT ENGINEER | REG NUMBER | EXP DATE

AECOM
AECOM
1194 PACIFIC STREET, SUITE 204
SAN LUIS OBISPO, CA 93401
T 805.542.9840 F 805.542.9990
www.aecom.com

CITY OF EL PASO DE ROBLES
WATER TREATMENT PLANT PROJECT

ELECTRICAL DETAILS (4 OF 4)

DESIGNED:
DETAILED:
CHECKED:
APPROVED:
DATE: November 2012
AECOM PROJECT NO. 60264606
P.R. PROJECT NO.
CADD STDS. AECOM
E00-09
SHEET - OF -

DWG: V:\PASO ROBLES\60264606-WTP\000 CAD\PLANSET\6-ELEC\E00-09.dwg Layout Name: E00-09 - Plotted by: Rodriguez, David Date: 11/28/2012 - 4:00 PM
XREFS: G-BD-PR IMAGES: CITY OF PASO LOGO_1.png -

INTERNATIONAL SOCIETY OF AUTOMATION (ISA) TABLE

IDENTIFICATION LETTERS

	FIRST–LETTER		SUCCEEDING–LETTERS		
	MEASURED OR INITIATING VARIABLE	MODIFIER	READOUT OR PASSIVE FUNCTION	OUTPUT FUNCTION	MODIFIER
A	ANALYSIS		ALARM		
B	BURNER, COMBUSTION		USER'S CHOICE	USER'S CHOICE	USER'S CHOICE
C	CONDUCTIVITY			CONTROL	
D	USER'S CHOICE	DIFFERENTIAL			
E	VOLTAGE		SENSOR (PRIMARY ELEMENT)		
F	FLOW RATE	RATIO (FRACTION)			
G	USER'S CHOICE		GLASS, VIEWING DEVICE		
H	HAND				HIGH
I	CURRENT (ELECTRICAL)		INDICATE		
J	POWER	SCAN			
K	TIME, TIME SCHEDULE	TIME RATE OF CHANGE		CONTROL STATION	
L	LEVEL		LIGHT		LOW
M	USER'S CHOICE	MOMENTARY			MIDDLE, INTERMEDIATE
N	USER'S CHOICE		PLC/RTU INPUT	USER'S CHOICE	NORMAL
O	USER'S CHOICE		ORIFICE, RESTRICTION		
P	PRESSURE, VACUUM		POINT (TEST) CONNECTION		
Q	QUANTITY	INTEGRATE, TOTALIZE			
R	RADIATION		RECORD		
S	SPEED, FREQUENCY	SAFETY		SWITCH	
T	TEMPERATURE			TRANSMIT	
U	MULTIVARIABLE		MULTIFUNCTION	MULTIFUNCTION	MULTIFUNCTION
V	VIBRATION, MECHANICAL ANALYSIS			VALVE,DAMPER LOUVER	
W	WEIGHT, FORCE		WELL		
X	UNCLASSIFIED	X AXIS	UNCLASSIFIED(*)	UNCLASSIFIED(*)	UNCLASSIFIED(*)
Y	EVENT, STATE OR PRESENCE	Y AXIS		RELAY, COMPUTE CONVERT	
Z	POSITION, DIMENSION	Z AXIS		DRIVER, ACTUATOR, UNCLASSIFIED FINAL CONTROL ELEMENT	

INSTRUMENT LINE SYMBOLS

- PRIMARY PROCESS FLOW
- SECONDARY PROCESS FLOW, CONNECTION TO PROCESS FLOW, MECHANICAL LINK OR INSTRUMENT SUPPLY
- PNEUMATIC SIGNAL OR UNDEFINED SIGNAL FOR PROCESS FLOW DIAGRAMS
- CAPILLARY TUBING (FILLED SYSTEM)
- ELECTRIC SIGNAL (DISCRETE)
- A — ELECTRIC SIGNAL (ANALOG, TSP)
- A3 — ELECTRIC SIGNAL (ANALOG, TST)
- DATA COMMUNICATION
- BUILDING OR FACILITY BOUNDARY
- (2) — MULTI–CIRCUIT ELECTRIC SIGNALS (NUMBER OF SIGNALS ILLUSTRATED IN PARENTHESIS)
- I–5 01 — LOGICAL OR HARDWIRE SIGNAL NUMBER (SHOWN SIGNAL "01" ORIGINATED IN DWG. I–5)
- 01 I–5 — LOGICAL OR HARDWIRE SIGNAL NUMBER (SHOWN SIGNAL "01" SENT TO DWG. I–5)

VALVES & GATES

- BUTTERFLY
- GATE
- KNIFE GATE
- SWING CHECK
- BALL
- GLOBE
- DIAPHRAGM
- PLUG
- ECCENTRIC PLUG
- LUBRICATED PLUG
- 3–WAY GLOBE
- BALL CHECK
- PRESSURE RELIEF VAVLE
- PINCH VALVE
- CONCENTRIC REDUCER
- DRAIN
- M — MOTOR OPERATED BUTTERFLY
- PRESSURE REDUCING REGULATOR
- S — SOLENOID CONTROL
- S — 3–WAY SOLENOID
- NEEDLE VALVE
- PINCH VALVE
- DIAPHRAGM ACTUATED
- PRESSURE RELIEF
- EDUCTOR
- SECONDARY PROCESS DIAPHRAGM SEAL
- TELESCOPE VALVE
- PRESSURE/VACUUM SAFETY VALVE
- AIR TO OPEN– SPRING TO CLOSE PISTON/CYLINDER TYPE AIR ACTUATOR (AO/SC)

ACTUATORS OR OPERATORS

- M — MOTOR
- S — SOLENOID
- G — GEARBOX

INSTRUMENT IDENTIFICATION

FIT 01–0

- FIRST LETTER
- SUCCEEDING LETTERS
- LOOP NO. MODIFIER (USED WITH TWO OR MORE INSTRUMENTS HAVING THE SAME FUNCTIONAL LOOP IDENTIFICATION)
- LOOP NO.

- FIELD MOUNTED INSTRUMENT
- REAR OF PANEL MOUNTED INSTRUMENT
- FRONT OF PANEL MOUNTED INSTRUMENT
- ILLUMINATED HANDSWITCH
- PLC (PROGRAMMABLE LOGIC CONTROLLER)
- SCS (SUPERVISORY CONTROL STATION)
- INTERLOCK

PUMPS & COMPRESSORS

- CENTRIFUGAL PUMP
- VERTICAL TURBINE PUMP
- COMPRESSOR OR BLOWER
- SUMP PUMP

PRIMARY ELEMENTS

- ULTRASONIC LEVEL SENSOR
- FLOW TUBE
- V — V–CONE FLOW METER
- 8 — PROPELLER METER
- M — MAGNETIC FLOW METER
- FLOOD SWITCH

INSTRUMENT ABBREVIATIONS

AC	ALTERNATING CURRENT
AI	ANALOG INPUT
AL	ALARM
AO	ANALOG OUTPUT
AM	AUTO–MANUAL
BW	BACKWASH
C	CLOSE
CCC	CENTRAL CONTROL CENTER
COMP	COMPOUND
DC	DIRECT CURRENT
DI	DISCRETE INPUT
DO	DISCRETE OUTPUT
ETM	ELAPSED TIME METER
FO	FIBER OPTIC
FOPP	FIBER OPTIC PATCH PANEL
HL	HIGH–LOW
HLO	HIGH–LOW–OFF
HLOR	HIGH–LOW–OFF–REMOTE
HOA	HAND–OFF–AUTO
I/O	INPUT/OUTPUT
LCP	LOCAL CONTROL PANEL
LL	LOCAL LEVEL
LP	LOCAL PRESSURE
LOS	LOCK–OUT–STOP
LOR	LOCAL–OFF–REMOTE
LPU	LINE PROTECTION UNIT
LR	LOCAL–REMOTE
MCC	MOTOR CONTROL CENTER
MCS	MASTER CONTROL STATION
MODEM	MODULATE–DEMODULATE
NIC	NOT IN CONTRACT
O	OPEN
OC	OPEN–CLOSE
OCA	OPEN–CLOSE–AUTO
OIC	OPEN–INTERMEDIATE–CLOSED
OO	ON–OFF
OOA	ON–OFF–AUTO
OOR	ON–OFF–REMOTE
ORO	OFF–RESET–ON
OSC	OPEN–STOP–CLOSE
OSCA	OPEN–STOP–CLOSE–AUTO
OSCR	OPEN–STOP–CLOSE–REMOTE
P/A	PULSE TO ANALOG
P&ID	PROCESS & INSTRUMENTATION DIAGRAM
PID	PROPORTIONAL–INTEGRAL–DERIVATIVE
PRV	PRESSURE RELIEF VALVE
PS	DC POWER SUPPLY
PZR	POSITIVE ZERO RETURN
RIOP	REMOTE I/O PANEL
RSP	REMOTE SET POINT
RTD	RESISTANCE TEMPERATURE DETECTOR
RTDI	RTD INPUT MODULE
RTU	REMOTE TERMINAL UNIT
SCS	SUPERVISORY CONTROL STATION
SP	SET POINT
SS	START–STOP
TEMP	TEMPERATURE
TOT	TOTALIZATION
TPC	TIME PROPORTIONAL CONTROL
TSP	TWISTED SHIELDED PAIR
TST	TWISTED SHIELDED TRIAD
TURB	TURBIDITY

PRELIMINARY 30% SUBMITTAL

0 1/2 1
IF THIS BAR DOES NOT MEASURE 1" THEN DRAWING IS NOT TO FULL SCALE

REV	DATE	PROJECT ENGINEER	REG NUMBER	DESCRIPTION	EXP DATE	APPR

AECOM
AECOM
1194 PACIFIC STREET, SUITE 204
SAN LUIS OBISPO, CA 93401
T 805.542.9840 F 805.542.9990
www.aecom.com

CITY OF EL PASO DE ROBLES
WATER TREATMENT PLANT PROJECT

INSTRUMENTATION LEGEND AND SYMBOLS

DESIGNED:
DETAILED:
CHECKED:
APPROVED:
DATE: November 2012
AECOM PROJECT NO. 60264606
P.R. PROJECT NO.
CADD STDS. AECOM

N00-01
SHEET - OF -

DWG: V:\PASO ROBLES\60264606-WTP\000 CAD\PLANSET\5-INSTR\N00-01.dwg Layout Name: N-1 – Plotted by: Rodriguez, David Date: 11/28/2012 – 4:05 PM
XREFS: G-BD-PR IMAGES: CITY OF PASO LOGO_1.png –

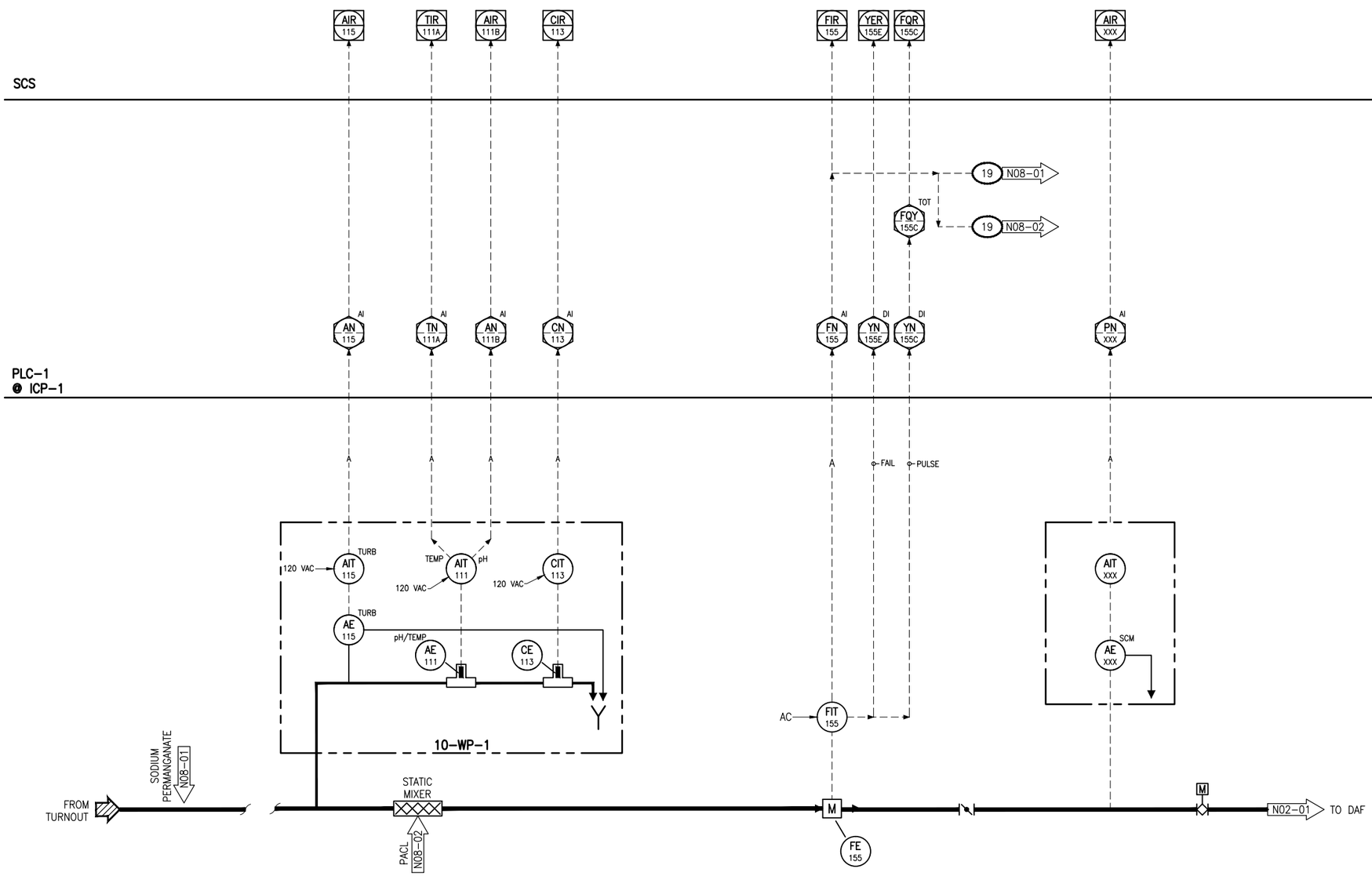

REV	DATE	DESCRIPTION	APPR

PROJECT ENGINEER | REG NUMBER | EXP DATE

AECOM
AECOM
1194 PACIFIC STREET, SUITE 204
SAN LUIS OBISPO, CA 93401
T 805.542.9840 F 805.542.9990
www.aecom.com

CITY OF EL PASO DE ROBLES
WATER TREATMENT PLANT PROJECT

TURNOUT P&ID

DESIGNED:
DETAILED:
CHECKED:
APPROVED:
DATE: November 2012

AECOM PROJECT NO.
60264606

P.R. PROJECT NO.

CADD STDS.
AECOM

N01-01
SHEET
- OF -

PRELIMINARY
30% SUBMITTAL

0 1/2 1
IF THIS BAR DOES NOT MEASURE 1" THEN DRAWING IS NOT TO FULL SCALE

DWG: V:\PASO ROBLES\60264606-WTP\000 CAD\PLANSET\5-INSTR\N01-01.dwg Layout Name: 34x22 - Plotted by: Rodriguez, David Date: 11/28/2012 - 4:03 PM
XREFS: C-BD-PR IMAGES: CITY OF PASO LOGO_1.png -

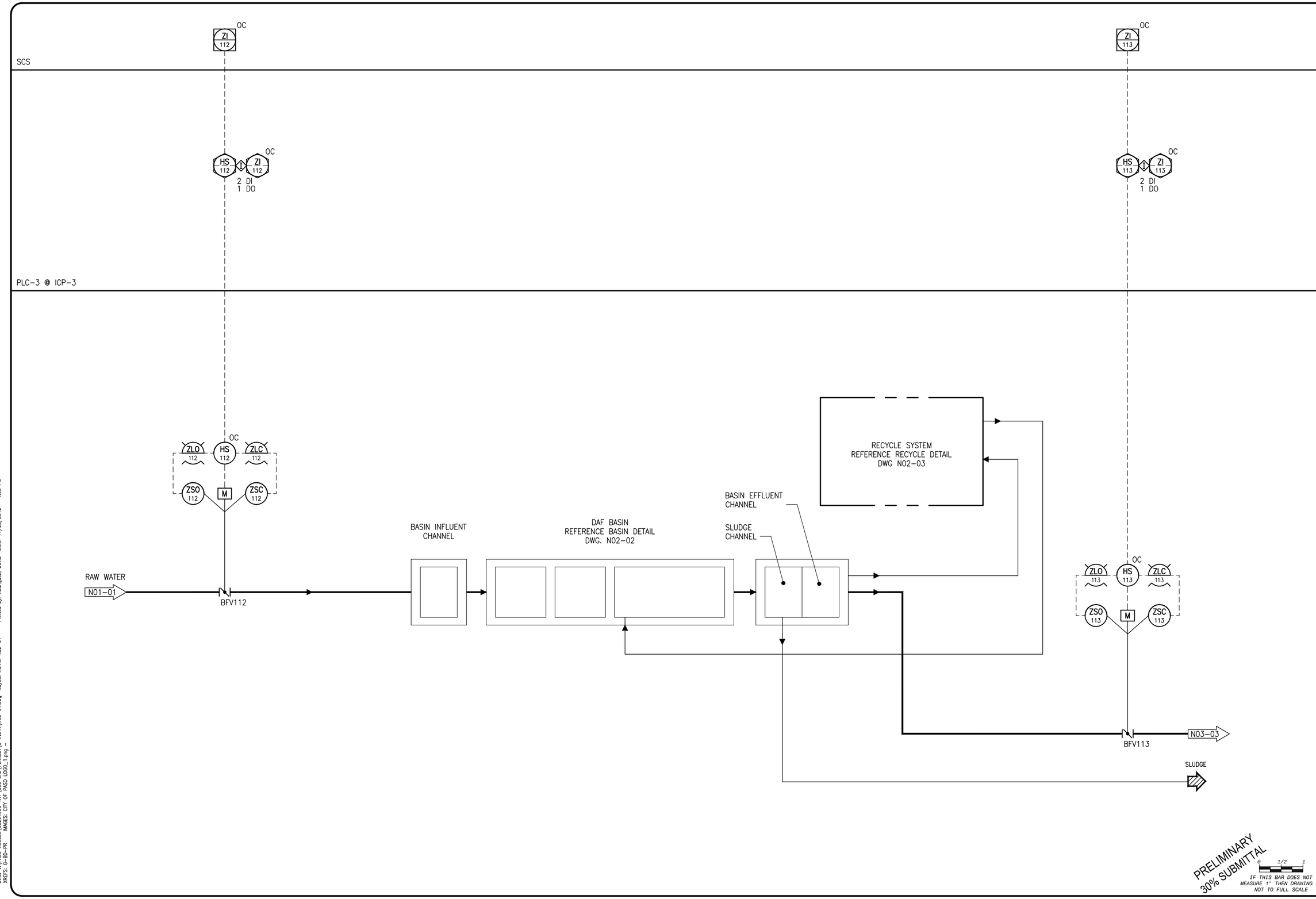

PRELIMINARY
30% SUBMITTAL

0 1/2 1
IF THIS BAR DOES NOT MEASURE 1" THEN DRAWING IS NOT TO FULL SCALE

REV	DATE	DESCRIPTION	APPR
1			
2			
3			
4			

PROJECT ENGINEER | REG NUMBER | EXP DATE

AECOM
AECOM
1194 PACIFIC STREET, SUITE 204
SAN LUIS OBISPO, CA 93401
T 805.542.9840 F 805.542.9990
www.aecom.com

CITY OF EL PASO DE ROBLES
WATER TREATMENT PLANT PROJECT

PROCESS 20
DISSOLVED AIR FLOATATION P&ID-1

DESIGNED:
DETAILED:
CHECKED:
APPROVED:
DATE: November 2012
AECOM PROJECT NO. 60264606
P.R. PROJECT NO.
CADD STDS. AECOM

N02-01
SHEET
- OF -

DWG: V:\PASO ROBLES\60264606-WTP\000 CAD\PLANSET\5-INSTR\N02-01.dwg Layout Name: N02-01 - Plotted by: Rodriguez, David Date: 11/28/2012 - 4:03 PM
XREFS: C-BD-PR IMAGES: CITY OF PASO LOGO_1.png -

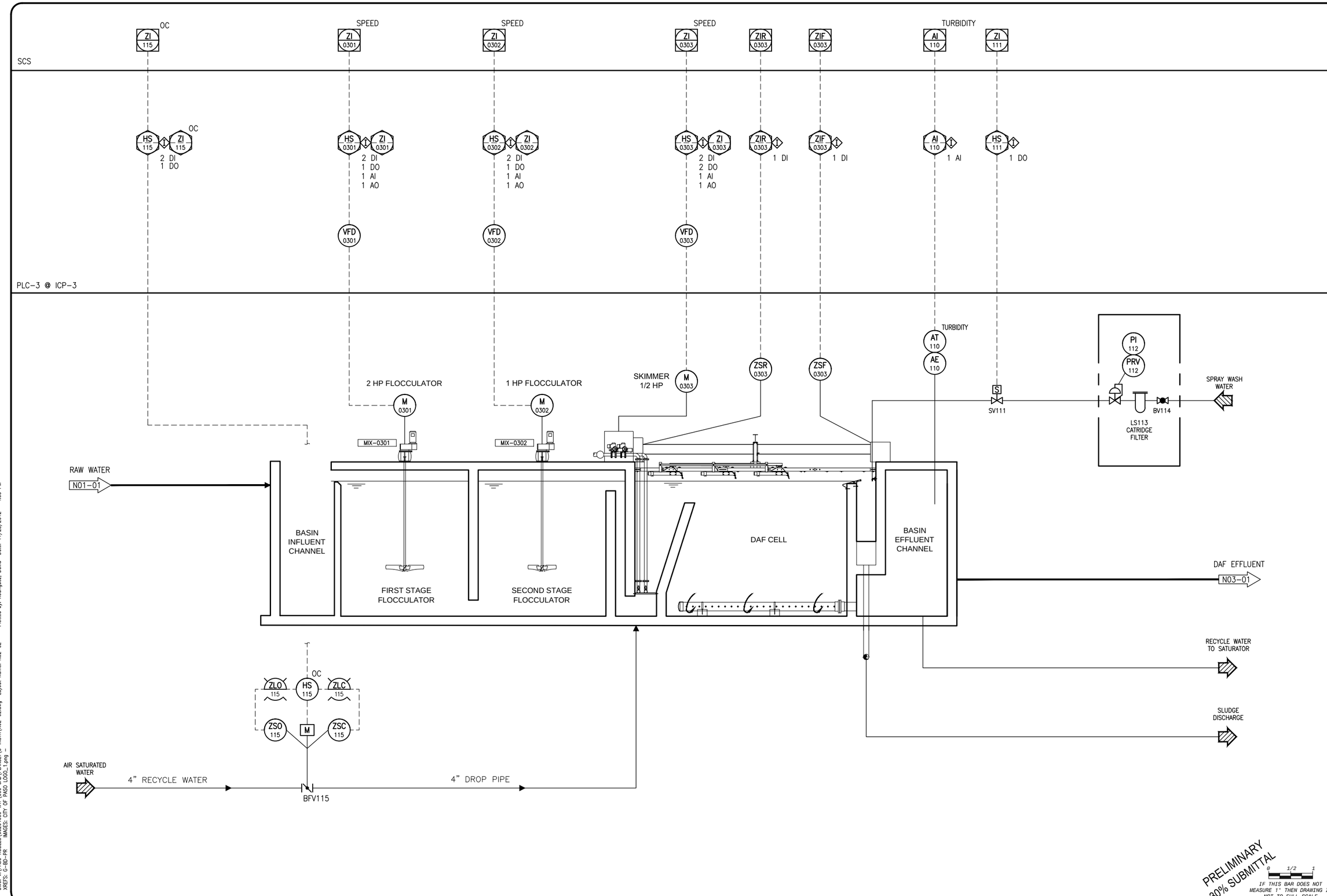

PRELIMINARY
30% SUBMITTAL

IF THIS BAR DOES NOT MEASURE 1" THEN DRAWING IS NOT TO FULL SCALE

REV	DATE	DESCRIPTION	APPR

PROJECT ENGINEER | REG NUMBER | EXP DATE

AECOM
AECOM
1194 PACIFIC STREET, SUITE 204
SAN LUIS OBISPO, CA 93401
T 805.542.9840 F 805.542.9990
www.aecom.com

CITY OF EL PASO DE ROBLES
WATER TREATMENT PLANT PROJECT

PROCESS 20
DISSOLVED AIR FLOATATION P&ID-2

DESIGNED:
DETAILED:
CHECKED:
APPROVED:
DATE: November 2012
AECOM PROJECT NO. 60264606
P.R. PROJECT NO.
CADD STDS. AECOM

N02-02
SHEET
- OF -

DWG: V:\PASO ROBLES\60264606-WTP\000 CAD\PLANSET\5-INSTR\N02-02.dwg Layout Name: N02-02 - Plotted by: Rodriguez, David Date: 11/28/2012 - 4:03 PM
XREFS: G-BD-PR IMAGES: CITY OF PASO LOGO_1.png -

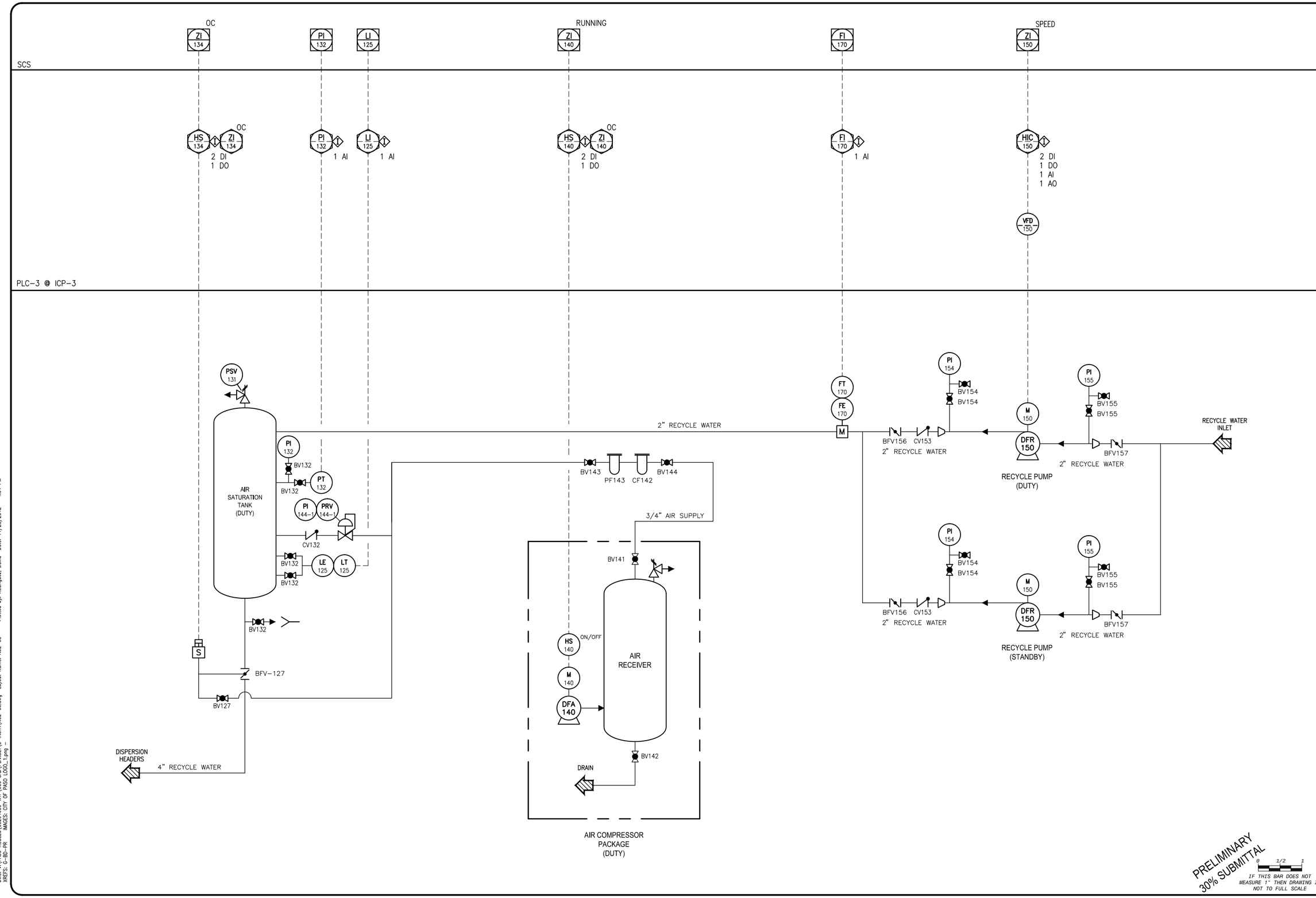

PRELIMINARY
30% SUBMITTAL

0 1/2 1
IF THIS BAR DOES NOT MEASURE 1" THEN DRAWING IS NOT TO FULL SCALE

REV	DATE	DESCRIPTION	APPR

PROJECT ENGINEER | REG NUMBER | EXP DATE

AECOM
AECOM
1194 PACIFIC STREET, SUITE 204
SAN LUIS OBISPO, CA 93401
T 805.542.9840 F 805.542.9990
www.aecom.com

CITY OF EL PASO DE ROBLES
WATER TREATMENT PLANT PROJECT

PROCESS 20
DISSOLVED AIR FLOATATION P&ID-3

DESIGNED:
DETAILED:
CHECKED:
APPROVED:
DATE: November 2012
AECOM PROJECT NO. 60264606
P.R. PROJECT NO.
CADD STDS. AECOM

N02-03
SHEET
- OF -

DWG: V:\PASO ROBLES\60264606-WTP\000 CAD\PLANSET\5-INSTR\N02-03.dwg Layout Name: N02-03 - Plotted by: Rodriguez, David Date: 11/28/2012 - 4:04 PM
XREFS: G-BD-PR IMAGES: CITY OF PASO LOGO_1.png -

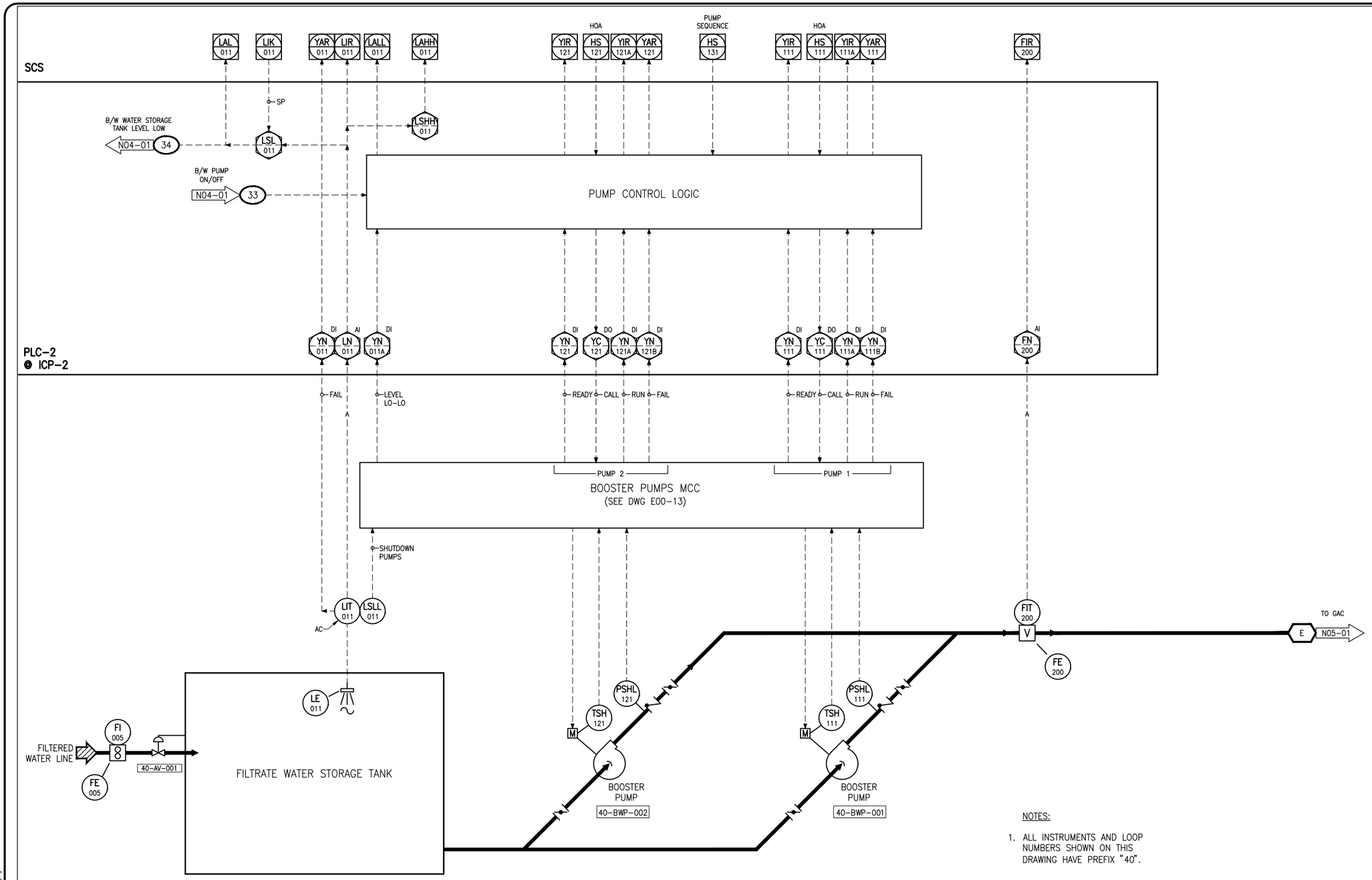

NOTES:

1. ALL INSTRUMENTS AND LOOP NUMBERS SHOWN ON THIS DRAWING HAVE PREFIX "40".

PRELIMINARY
30% SUBMITTAL

0 1/2 1
IF THIS BAR DOES NOT MEASURE 1" THEN DRAWING IS NOT TO FULL SCALE

REV	DATE	DESCRIPTION	APPR
4			
3			
2			
1			

PROJECT ENGINEER | REG NUMBER | EXP DATE

AECOM
AECOM
1194 PACIFIC STREET, SUITE 204
SAN LUIS OBISPO, CA 93401
T 805.542.9840 F 805.542.9990
www.aecom.com

CITY OF EL PASO DE ROBLES
WATER TREATMENT PLANT PROJECT

BOOSTER PUMP STATION P & ID

DESIGNED:
DETAILED:
CHECKED:
APPROVED:
DATE: November 2012
AECOM PROJECT NO. 60264606
~~P.R. PROJECT NO.~~
CADD STDS. AECOM

N04-01
SHEET
- OF -

DWG: V:\PASO ROBLES\60264606-WTP\000 CAD\PLANSET\5-INSTR\N04-01.dwg Layout Name: 34x22 - Plotted by: Rodriguez, David Date: 11/28/2012 - 4:04 PM
XREFS: G-BD-PR IMAGES: CITY OF PASO LOGO_1.png -

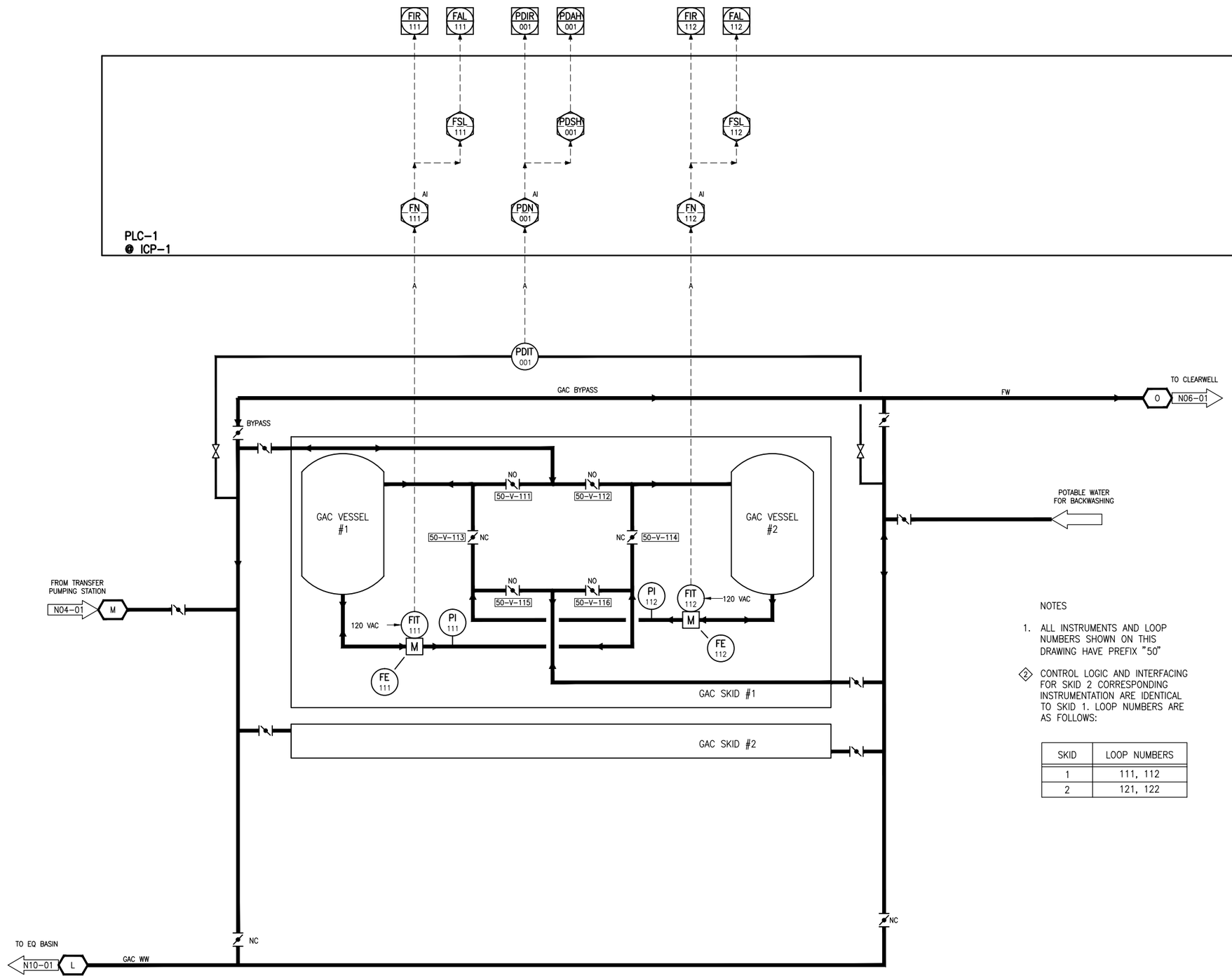

NOTES

1. ALL INSTRUMENTS AND LOOP NUMBERS SHOWN ON THIS DRAWING HAVE PREFIX "50"

2. CONTROL LOGIC AND INTERFACING FOR SKID 2 CORRESPONDING INSTRUMENTATION ARE IDENTICAL TO SKID 1. LOOP NUMBERS ARE AS FOLLOWS:

SKID	LOOP NUMBERS
1	111, 112
2	121, 122

PRELIMINARY 30% SUBMITTAL

0 1/2 1

IF THIS BAR DOES NOT MEASURE 1" THEN DRAWING IS NOT TO FULL SCALE

REV	DATE	DESCRIPTION	APPR

PROJECT ENGINEER | REG NUMBER | EXP DATE

AECOM
1194 PACIFIC STREET, SUITE 204
SAN LUIS OBISPO, CA 93401
T 805.542.9840 F 805.542.9990
www.aecom.com

CITY OF EL PASO DE ROBLES
WATER TREATMENT PLANT PROJECT

PROCESS 50
GAC SYSTEM P&ID

DESIGNED:
DETAILED:
CHECKED:
APPROVED:
DATE: November 2012
AECOM PROJECT NO. 60264606
P.R. PROJECT NO.
CADD STDS. AECOM

N05-01
SHEET
- OF -

DWG: V:\PASO ROBLES\60264606-WTP\000 CAD\PLANSET\5-INSTR\N05-01.dwg Layout Name: 34x22 - Plotted by: Rodriguez, David Date: 11/28/2012 - 4:04 PM
XREFS: G-BD-PR IMAGES: CITY OF PASO LOGO_1.png -

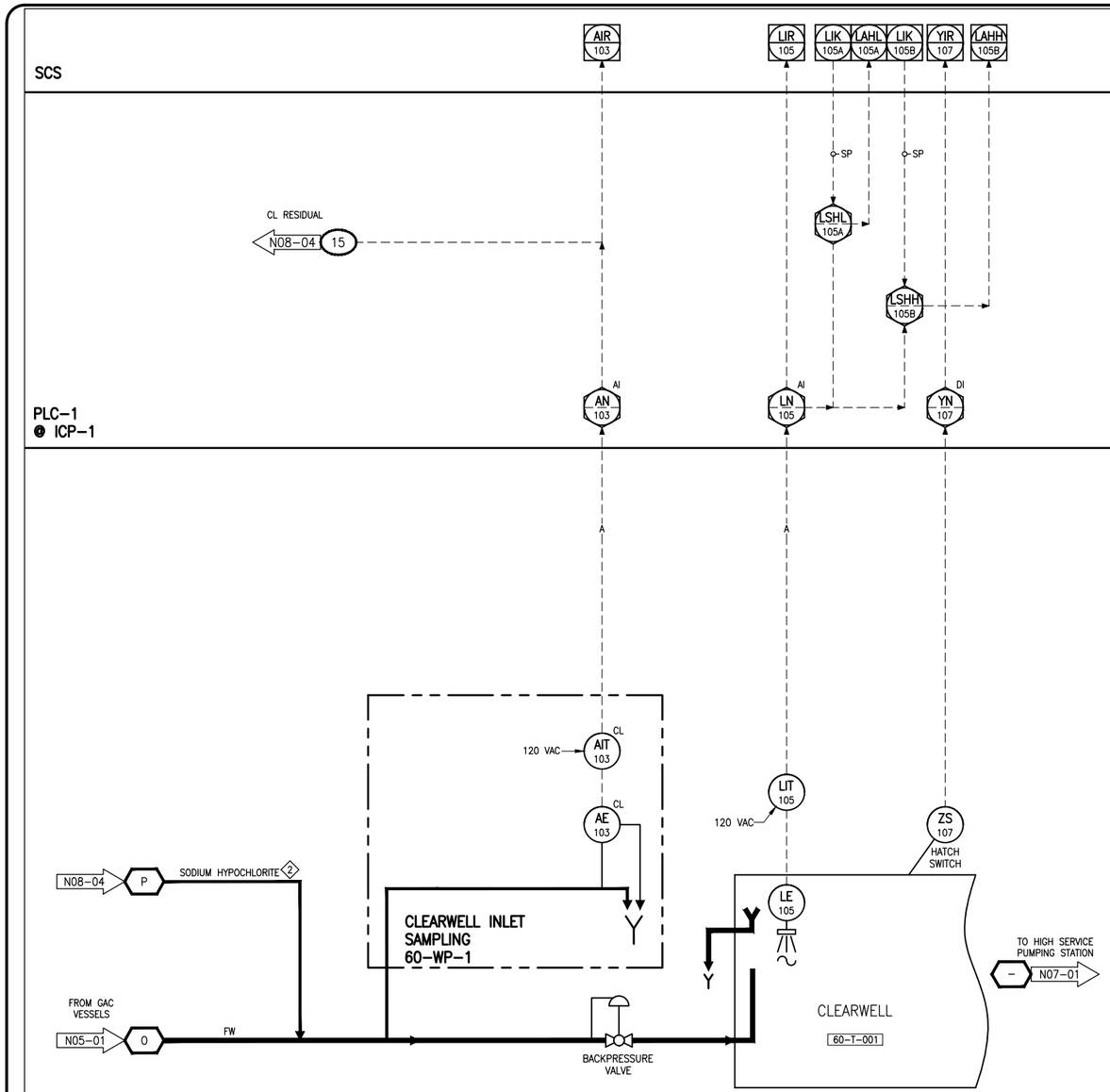

NOTES

1. ALL INSTRUMENTS AND LOOP NUMBERS SHOWN ON THIS DRAWING HAVE PREFIX "60"

2 INJECTED AT GAC PROCESS DISCHARGE

PRELIMINARY
30% SUBMITTAL

0 1/2 1
IF THIS BAR DOES NOT MEASURE 1" THEN DRAWING IS NOT TO FULL SCALE

REV	DATE	DESCRIPTION	APPR

PROJECT ENGINEER | REG NUMBER | EXP DATE

AECOM
AECOM
1194 PACIFIC STREET, SUITE 204
SAN LUIS OBISPO, CA 93401
T 805.542.9840 F 805.542.9990
www.aecom.com

CITY OF EL PASO DE ROBLES
WATER TREATMENT PLANT PROJECT

PROCESS 60
CLEARWELL P&ID

DESIGNED:
DETAILED:
CHECKED:
APPROVED:
DATE: November 2012
AECOM PROJECT NO. 60264606
P.R. PROJECT NO.
CADD STDS. AECOM

N06-01
SHEET
- OF -

DWG: V:\PASO ROBLES\60264606-WTP\000 CAD\PLANSET\5-INSTR\N06-01.dwg Layout Name: 34x22 - Plotted by: Rodriguez, David Date: 11/28/2012 - 4:04 PM
XREFS: C-BD-PR IMAGES: CITY OF PASO LOGO_1.png -

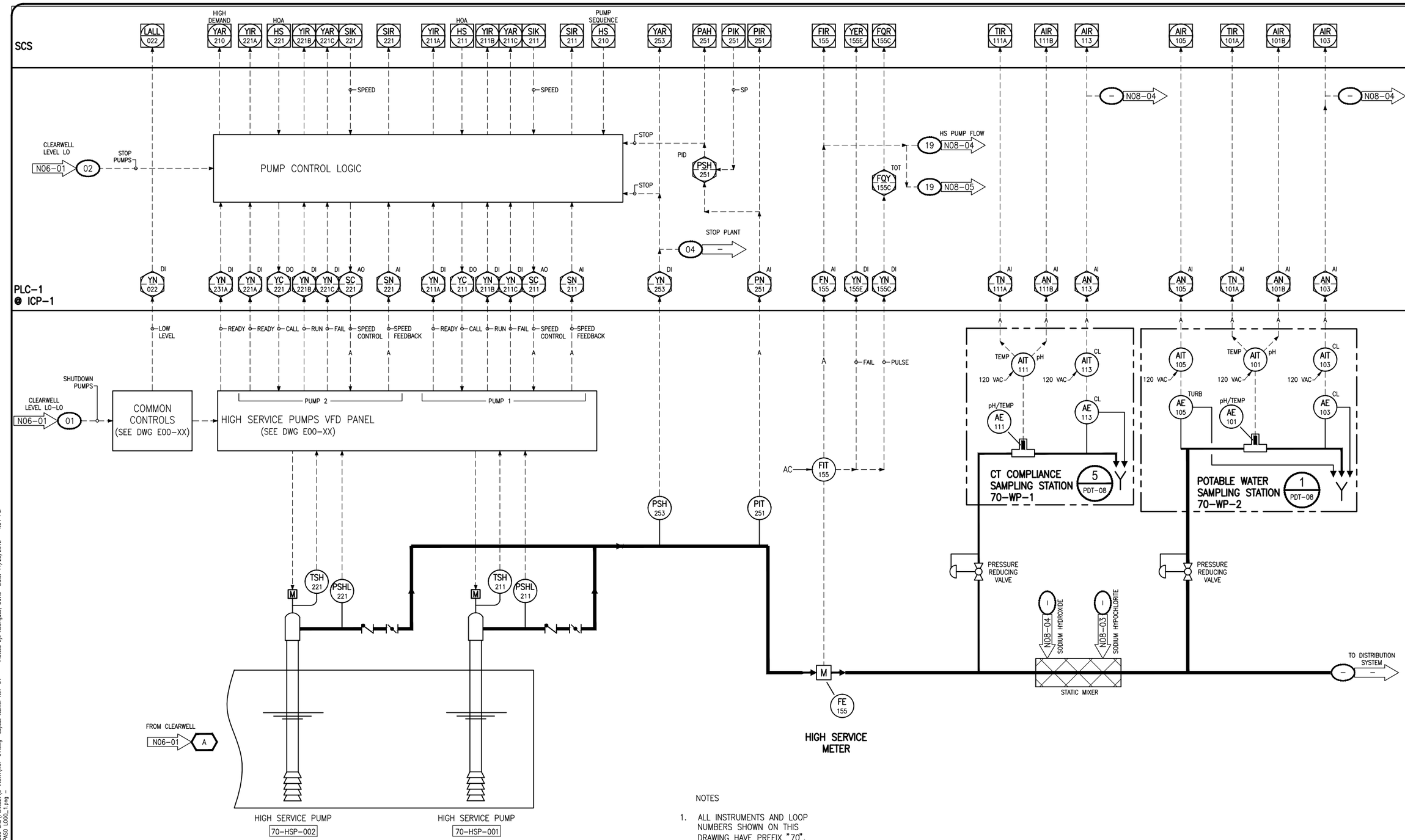

NOTES

1. ALL INSTRUMENTS AND LOOP NUMBERS SHOWN ON THIS DRAWING HAVE PREFIX "70".

PRELIMINARY 30% SUBMITTAL

IF THIS BAR DOES NOT MEASURE 1" THEN DRAWING IS NOT TO FULL SCALE

REV	DATE	DESCRIPTION	APPR

PROJECT ENGINEER | REG NUMBER | EXP DATE

AECOM
1194 PACIFIC STREET, SUITE 204
SAN LUIS OBISPO, CA 93401
T 805.542.9840 F 805.542.9990
www.aecom.com

CITY OF EL PASO DE ROBLES
WATER TREATMENT PLANT PROJECT

PROCESS 70
HIGH SERVICE PUMP STATION P&ID

DESIGNED:
DETAILED:
CHECKED:
APPROVED:
DATE: November 2012
AECOM PROJECT NO. 60264606
P.R. PROJECT NO.
CADD STDS. AECOM

N07-01
SHEET
- OF -

DWG: V:\PASO ROBLES\60264606-WTP\000 CAD\PLANSET\5-INSTR\N07-01.dwg Layout Name: N07-01 - Plotted by: Rodriguez, David Date: 11/28/2012 - 4:04 PM
XREFS: C-BD-PR IMAGES: CITY OF PASO LOGO_1.png -

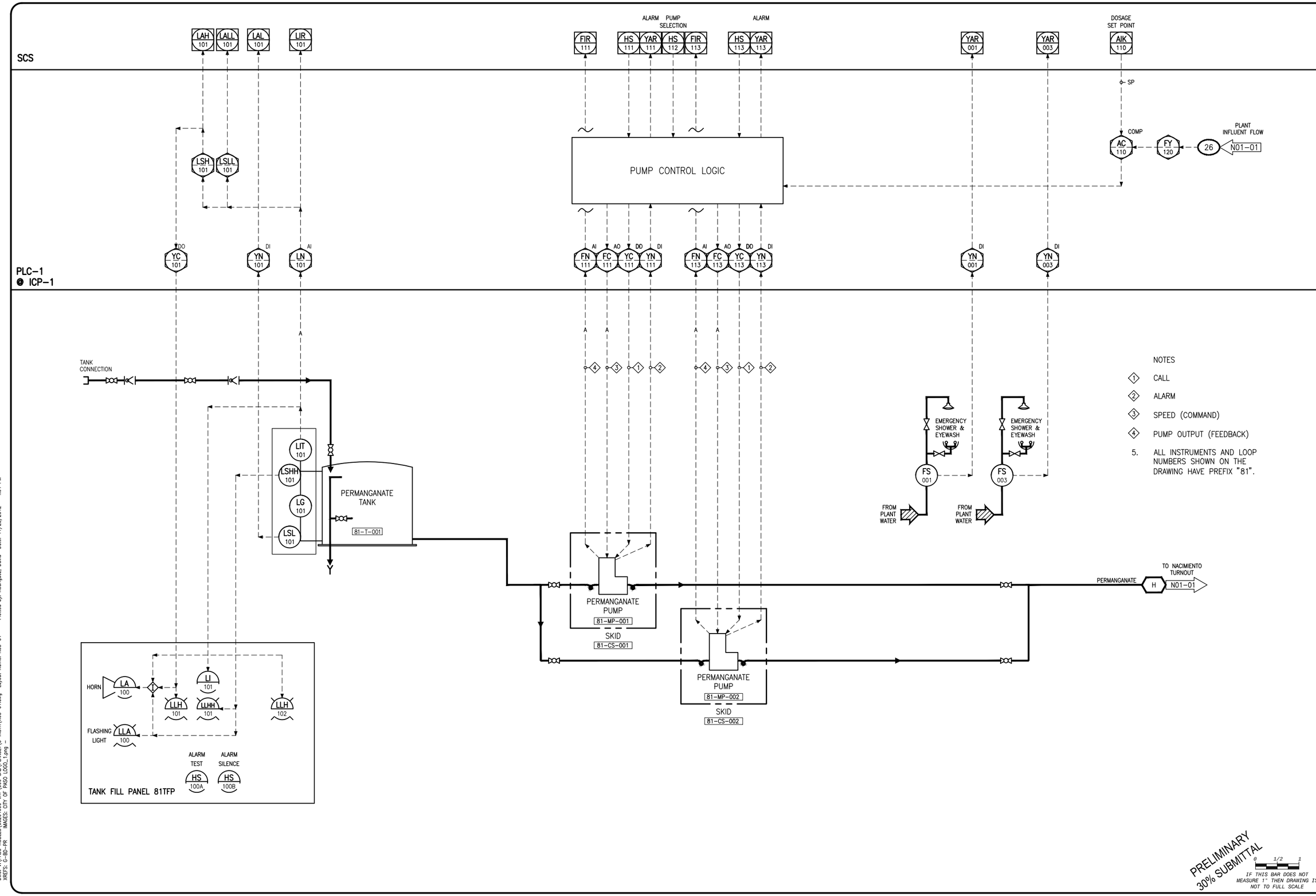
SCS
PLC-1
@ ICP-1
LAH 101
LALL 101
LAL 101
LIR 101
LSH 101
LSLL 101
YC 101
YN 101
LN 101
FIR 111
HS 111
YAR 111
HS 112
FIR 113
HS 113
YAR 113
ALARM
PUMP SELECTION
ALARM
PUMP CONTROL LOGIC
FN 111
FC 111
YC 111
YN 111
FN 113
FC 113
YC 113
YN 113
YAR 001
YAR 003
YN 001
YN 003
DOSAGE SET POINT
AIK 110
SP
COMP
AC 110
FY 120
26
PLANT INFLUENT FLOW
N01-01
TANK CONNECTION
LIT 101
LSHH 101
LG 101
LSL 101
PERMANGANATE TANK
81-T-001
EMERGENCY SHOWER & EYEWASH
FS 001
FS 003
FROM PLANT WATER
PERMANGANATE PUMP
81-MP-001
SKID
81-CS-001
PERMANGANATE PUMP
81-MP-002
SKID
81-CS-002
PERMANGANATE
H
TO NACIMIENTO TURNOUT
N01-01
HORN
LA 100
LLA 100
FLASHING LIGHT
LI 101
LLH 101
LLHH 101
LLH 102
ALARM TEST
HS 100A
ALARM SILENCE
HS 100B
TANK FILL PANEL 81TFP
NOTES
1 CALL
2 ALARM
3 SPEED (COMMAND)
4 PUMP OUTPUT (FEEDBACK)
5. ALL INSTRUMENTS AND LOOP NUMBERS SHOWN ON THE DRAWING HAVE PREFIX "81".
PRELIMINARY 30% SUBMITTAL
IF THIS BAR DOES NOT MEASURE 1" THEN DRAWING IS NOT TO FULL SCALE
AECOM
AECOM
1194 PACIFIC STREET, SUITE 204
SAN LUIS OBISPO, CA 93401
T 805.542.9840 F 805.542.9990
www.aecom.com
CITY OF EL PASO DE ROBLES
WATER TREATMENT PLANT PROJECT
PROCESS 81
PERMANGANATE FEED SYSTEM P&ID
DESIGNED:
DETAILED:
CHECKED:
APPROVED:
DATE: November 2012
AECOM PROJECT NO.
60264606
P.R. PROJECT NO.
CADD STDS.
AECOM
N08-01
SHEET
- OF -
REV DATE DESCRIPTION APPR
PROJECT ENGINEER REG NUMBER EXP DATE
DWG: V:\PASO ROBLES\60264606-WTP\000 CAD\PLANSET\5-INSTR\N08-01.dwg Layout Name: N08-01 - Plotted by: Rodriguez, David Date: 11/28/2012 - 4:04 PM
XREFS: G-BD-PR IMAGES: CITY OF PASO LOGO_1.png

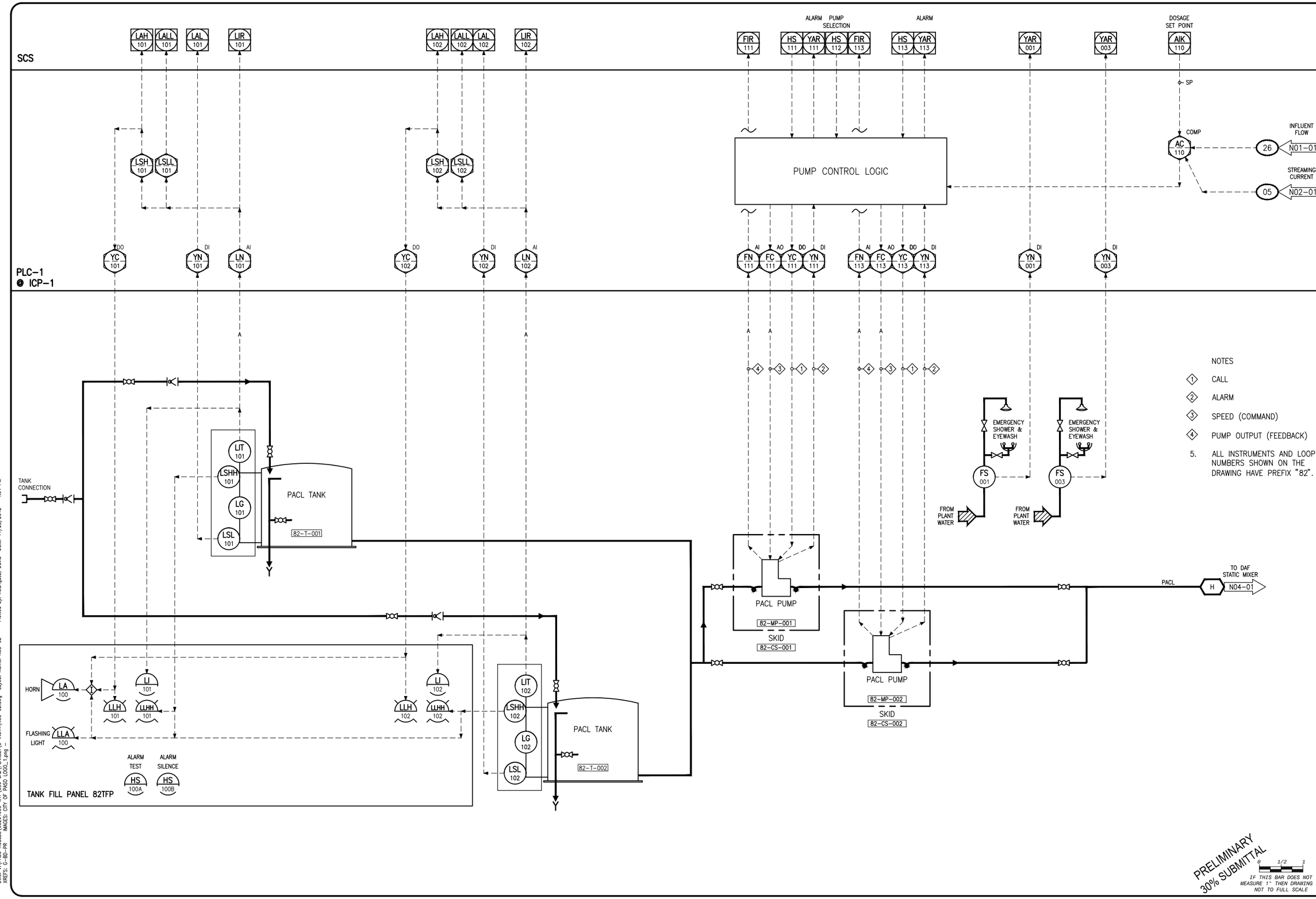

NOTES

1. CALL
2. ALARM
3. SPEED (COMMAND)
4. PUMP OUTPUT (FEEDBACK)
5. ALL INSTRUMENTS AND LOOP NUMBERS SHOWN ON THE DRAWING HAVE PREFIX "82".

PRELIMINARY 30% SUBMITTAL

0 1/2 1

IF THIS BAR DOES NOT MEASURE 1" THEN DRAWING IS NOT TO FULL SCALE

REV	DATE	DESCRIPTION	APPR

PROJECT ENGINEER | REG NUMBER | EXP DATE

AECOM
AECOM
1194 PACIFIC STREET, SUITE 204
SAN LUIS OBISPO, CA 93401
T 805.542.9840 F 805.542.9990
www.aecom.com

CITY OF EL PASO DE ROBLES

CITY OF EL PASO DE ROBLES
WATER TREATMENT PLANT PROJECT

PROCESS 82
PACL FEED SYSTEM P&ID

DESIGNED:
DETAILED:
CHECKED:
APPROVED:
DATE: November 2012
AECOM PROJECT NO. 60264606
P.R. PROJECT NO.
CADD STDS. AECOM

N08-02
SHEET
- OF -

DWG: V:\PASO ROBLES\60264606-WTP\000 CAD\PLANSET\5-INSTR\N08-02.dwg Layout Name: N08-02 - Plotted by: Rodriguez, David Date: 11/28/2012 - 4:04 PM
XREFS: G-BD-PR IMAGES: CITY OF PASO LOGO_1.png -

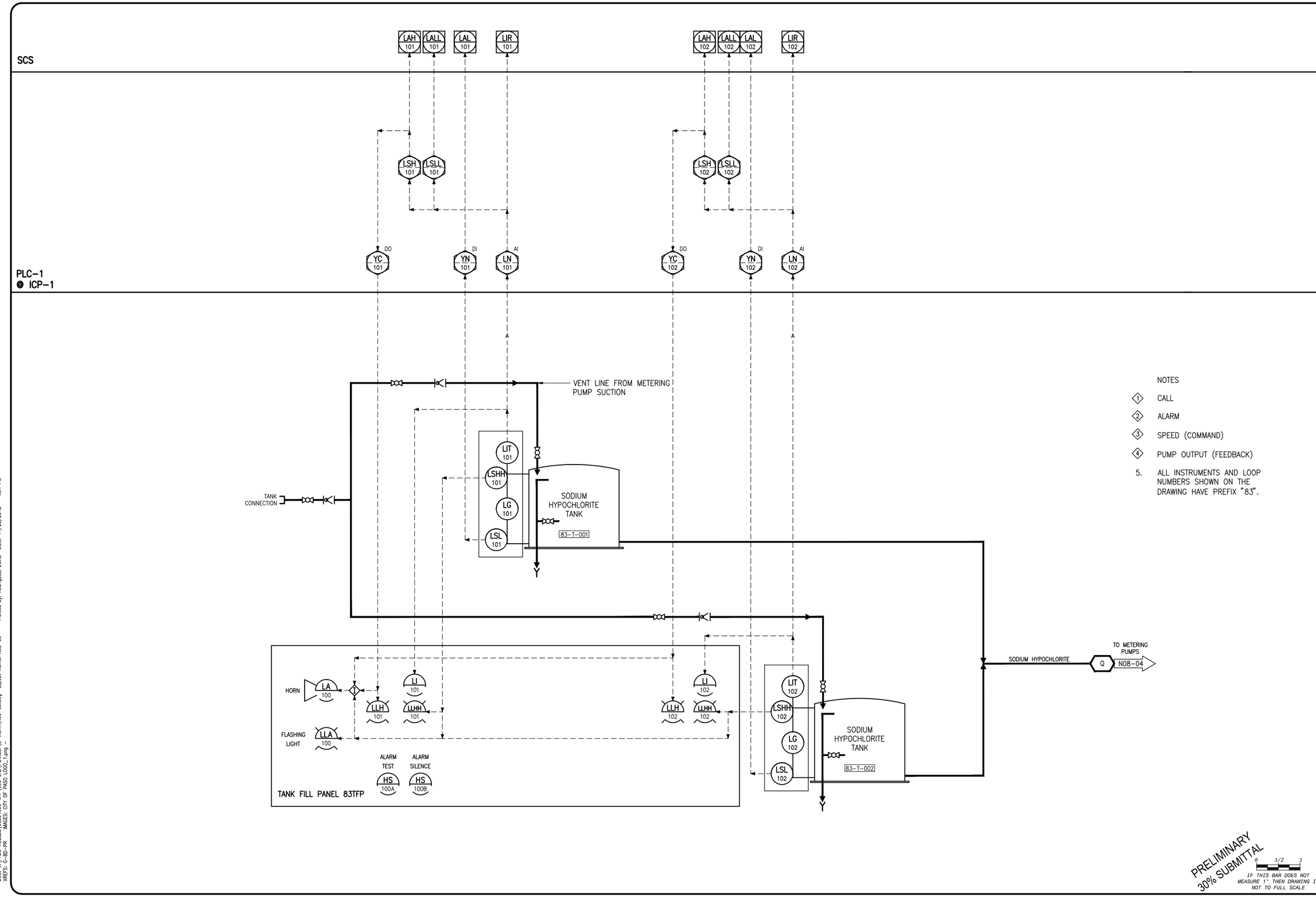
SCS
PLC-1
@ ICP-1
LAH 101
LALL 101
LAL 101
LIR 101
LAH 102
LALL 102
LAL 102
LIR 102
LSH 101
LSLL 101
LSH 102
LSLL 102
YC 101
YN 101
LN 101
YC 102
YN 102
LN 102
DO
DI
AI
A
VENT LINE FROM METERING PUMP SUCTION
TANK CONNECTION
LIT 101
LSHH 101
LG 101
LSL 101
SODIUM HYPOCHLORITE TANK
83-T-001
Y
SODIUM HYPOCHLORITE
TO METERING PUMPS
Q
N08-04
HORN
LA 100
FLASHING LIGHT
LLA 100
LLH 101
LLHH 101
LI 101
LLH 102
LLHH 102
LI 102
LIT 102
LSHH 102
LG 102
LSL 102
SODIUM HYPOCHLORITE TANK
83-T-002
ALARM TEST
ALARM SILENCE
HS 100A
HS 100B
TANK FILL PANEL 83TFP
NOTES
1 CALL
2 ALARM
3 SPEED (COMMAND)
4 PUMP OUTPUT (FEEDBACK)
5. ALL INSTRUMENTS AND LOOP NUMBERS SHOWN ON THE DRAWING HAVE PREFIX "83".
PRELIMINARY 30% SUBMITTAL
0 1/2 1
IF THIS BAR DOES NOT MEASURE 1" THEN DRAWING IS NOT TO FULL SCALE
REV DATE DESCRIPTION APPR
PROJECT ENGINEER REG NUMBER EXP DATE
AECOM
AECOM
1194 PACIFIC STREET, SUITE 204
SAN LUIS OBISPO, CA 93401
T 805.542.9840 F 805.542.9990
www.aecom.com
CITY OF EL PASO DE ROBLES
INCORPORATED 1889
CITY OF EL PASO DE ROBLES
WATER TREATMENT PLANT PROJECT
PROCESS 83 SYSTEM P&ID-1
SODIUM HYPOCHLORITE FEED
DESIGNED:
DETAILED:
CHECKED:
APPROVED:
DATE: November 2012
AECOM PROJECT NO.
60264606
P.R. PROJECT NO.
CADD STDS.
AECOM
N08-03
SHEET
- OF -
DWG: \\PASO ROBLES\60264606-WTP\000 CAD\PLANSET\5-INSTR\N08-03.dwg Layout Name: N08-03 - Plotted by: Rodriguez, David Date: 11/28/2012 - 4:04 PM
XREFS: G-BD-PR IMAGES: CITY OF PASO LOGO_1.png

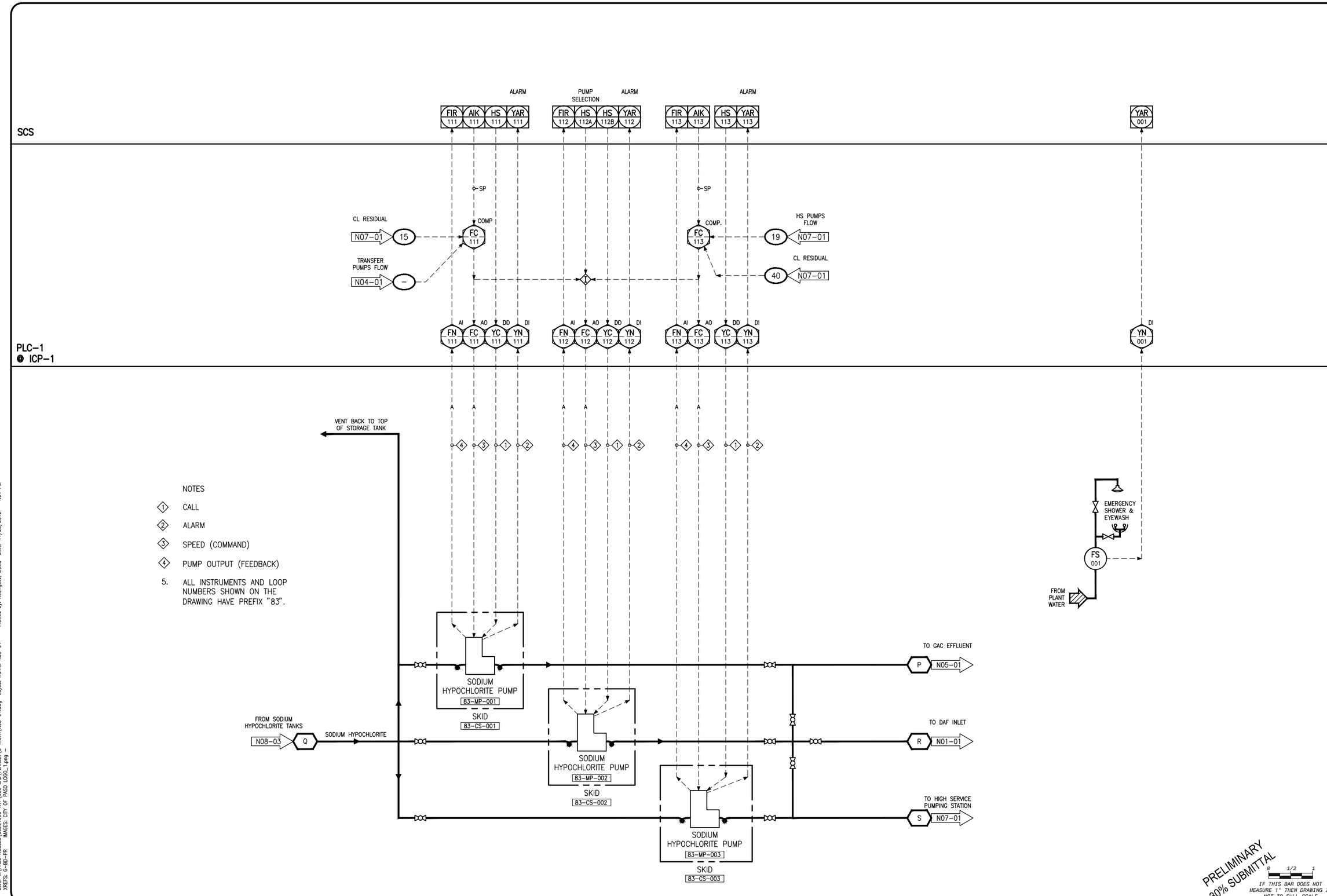

PRELIMINARY
30% SUBMITTAL

IF THIS BAR DOES NOT MEASURE 1" THEN DRAWING IS NOT TO FULL SCALE

REV	DATE	DESCRIPTION	APPR

PROJECT ENGINEER | REG NUMBER | EXP DATE

AECOM

AECOM
1194 PACIFIC STREET, SUITE 204
SAN LUIS OBISPO, CA 93401
T 805.542.9840 F 805.542.9990
www.aecom.com

CITY OF EL PASO DE ROBLES
WATER TREATMENT PLANT PROJECT

PROCESS 83
SODIUM HYPOCHLORITE FEED SYSTEM P&ID-2

DESIGNED:
DETAILED:
CHECKED:
APPROVED:
DATE: November 2012
AECOM PROJECT NO. 60264606
P.R. PROJECT NO.
CADD STDS. AECOM

N08-04
SHEET
- OF -

DWG: V:\PASO ROBLES\60264606-WTP\000 CAD\PLANSET\5-INSTR\N08-04.dwg Layout Name: N08-04 – Plotted by: Rodriguez, David Date: 11/28/2012 – 4:04 PM
XREFS: G-BD-PR IMAGES: CITY OF PASO LOGO_1.png –

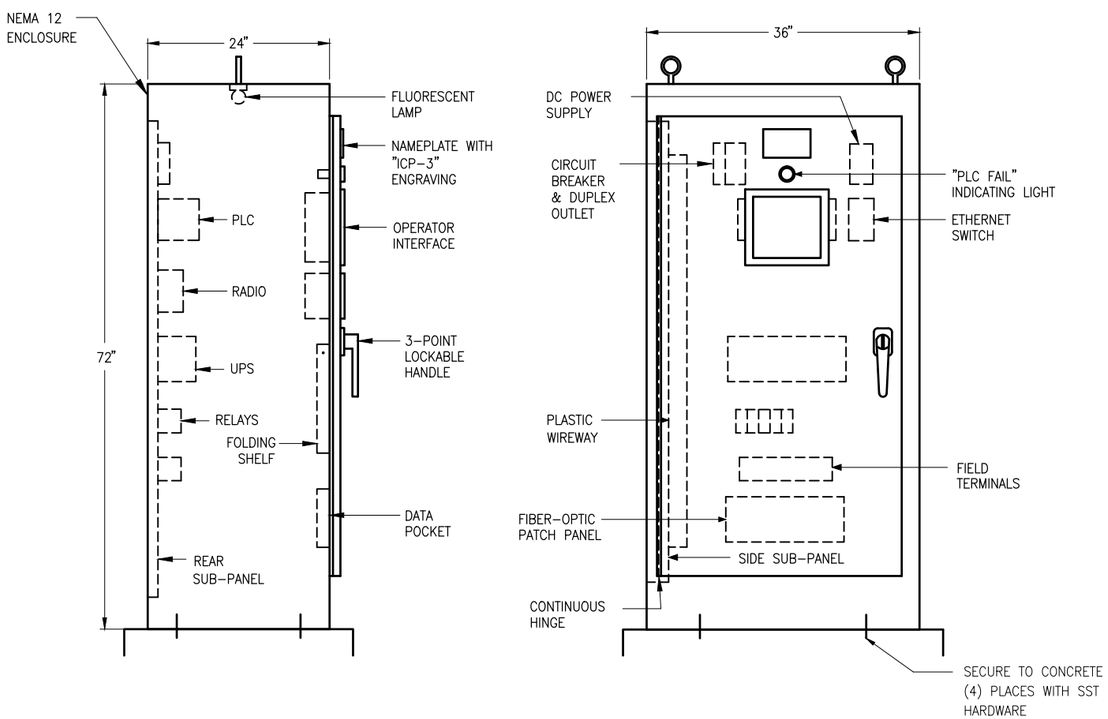

INSTRUMENT CONTROL PANEL (ICP) LAYOUT

1 / –

NTS

NOTE:

1. ICP DIMENSIONS SHOWN ARE MINIMAL. CONTRACTOR SHALL FURNISH ADEQUATELY SIZED CONTROL PANEL

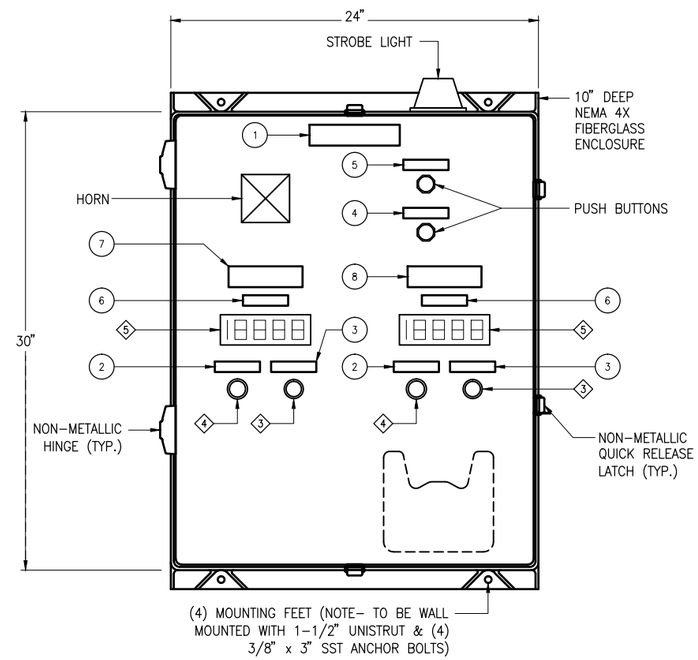

TANK FILL PANEL LAYOUT

2 / –

SCALE: NONE (TYP. FOR 82TFP)

NAMEPLATE ENGRAVING SCHEDULE:

1. PACL TANK FILL PANEL
2. HIGH LEVEL
3. HIGH-HIGH LEVEL
4. ALARM SILENCE
5. ALARM TEST
6. TANK LEVEL
7. PACL TANK 82-T-001
8. PACL TANK 82-T-002

NOTES:

1. MOUNT PANEL WITH LEVEL INDICATOR AT 5 FEET FROM GROUND LEVEL.
2. PROVIDE A SUNSHADE TO COMPLETELY SHADE FRONT OF LEVEL INDICATOR.

3 PUSH-TO-TEST LIGHT WITH RED LENS

4 PUSH-TO-TEST LIGHT WITH AMBER LENS

5 DIGITAL INDICATOR

PRELIMINARY 30% SUBMITTAL

0 1/2 1

IF THIS BAR DOES NOT MEASURE 1" THEN DRAWING IS NOT TO FULL SCALE

REV	DATE	DESCRIPTION	APPR
1			
2			
3			
4			

PROJECT ENGINEER | REG NUMBER | EXP DATE

AECOM
AECOM
1194 PACIFIC STREET, SUITE 204
SAN LUIS OBISPO, CA 93401
T 805.542.9990 F 805.542.9990
www.aecom.com

CITY OF EL PASO DE ROBLES
WATER TREATMENT PLANT PROJECT

INSTRUMENT DETAILS - 1

DESIGNED:
DETAILED:
CHECKED:
APPROVED:
DATE: November 2012
AECOM PROJECT NO. 60264606
P.R. PROJECT NO.
CADD STDS. AECOM

NDT-01
SHEET
- OF -

DWG: V:\PASO ROBLES\60264606-WTP\000 CAD\PLANSET\5-INSTR\NDT-01.dwg Layout Name: NDT-01 – Plotted by: Rodriguez, David Date: 11/28/2012 – 4:04 PM
XREFS: G-BD-PR IMAGES: CITY OF PASO LOGO_1.png –

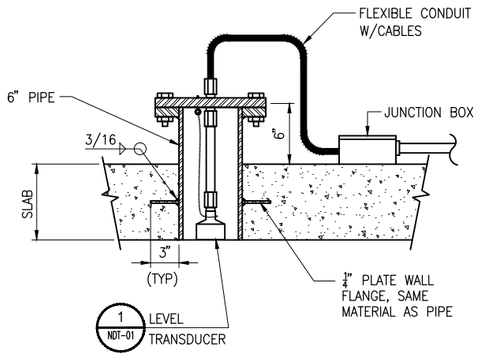

ULTRASONIC LEVEL SENSOR (1 / -)

SCALE: NONE

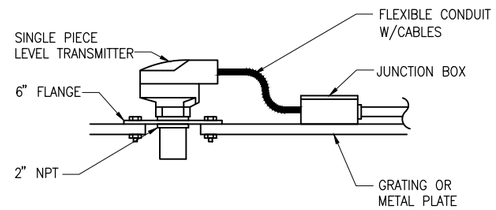

ULTRASONIC LEVEL SENSOR MOUNTING DETAIL (2 / -)

SCALE: NONE

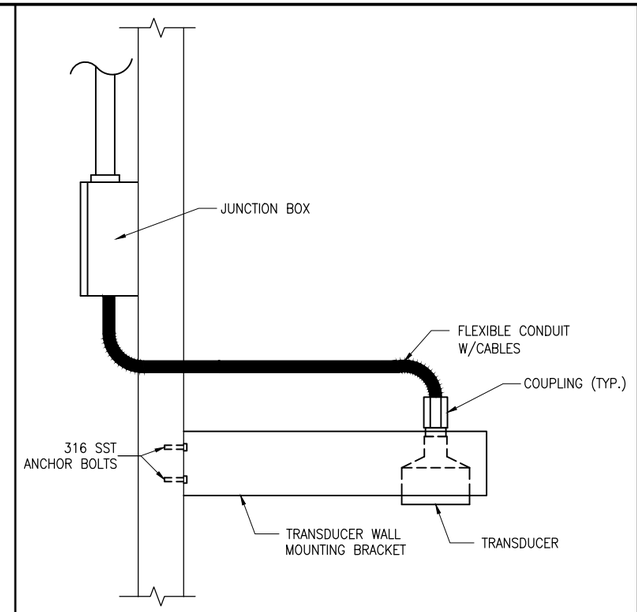

ULTRASONIC LEVEL SENSOR WALL MOUNTING DETAIL (3 / -)

SCALE: NONE

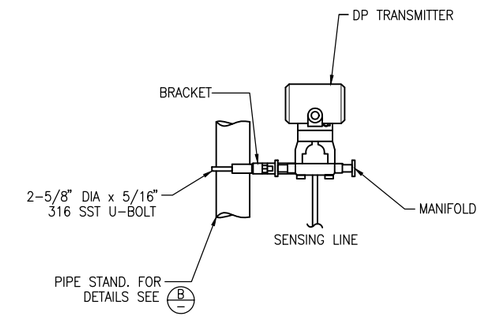

PIPE STAND MOUNTING (A / -)

SCALE: NONE

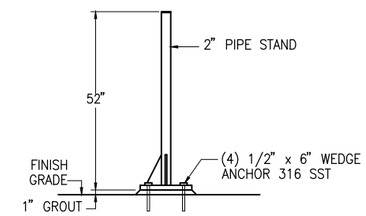

INSTRUMENT PIPE STAND (B / -)

SCALE: NONE

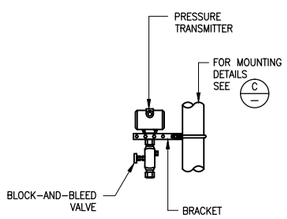

PIPE STAND MOUNTING (A / -)

SCALE: NONE

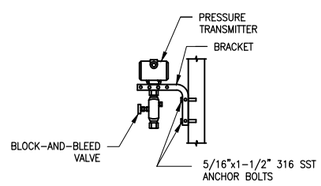

WALL MOUNTING BRACKET (B / -)

SCALE: NONE

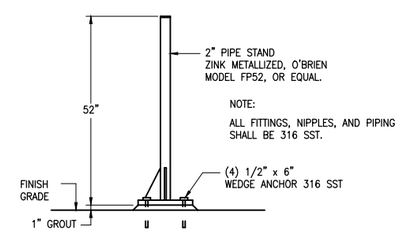

INSTRUMENT PIPE STAND MOUNTING (C / -)

SCALE: NONE

PRESSURE TRANSMITTER MOUNTING (5 / -)

SCALE: NONE

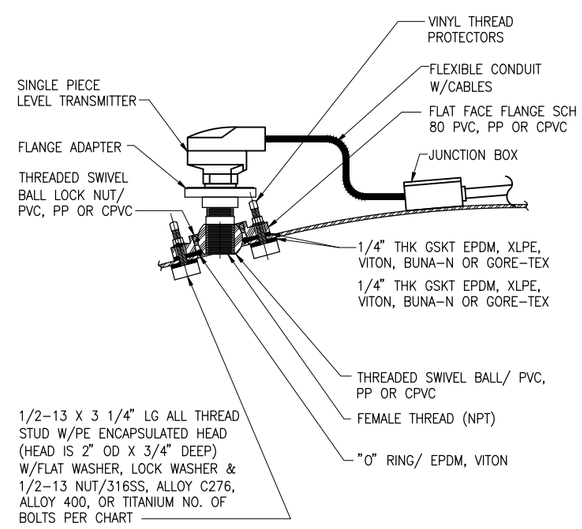

ULTRASONIC LEVEL SENSOR DOME MOUNTING DETAIL (6 / -)

SCALE:

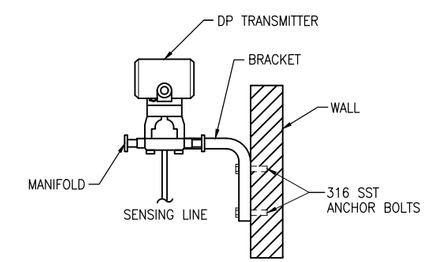

WALL MOUNTING (C / -)

SCALE: NONE

DIFFERENTIAL PRESSURE (DP) TRANSMITTER MOUNTING (4 / -)

SCALE: NONE

PRELIMINARY 30% SUBMITTAL

0 1/2 1

IF THIS BAR DOES NOT MEASURE 1" THEN DRAWING IS NOT TO FULL SCALE

REV	DATE	DESCRIPTION	APPR
1			
2			
3			
4			

PROJECT ENGINEER | REG NUMBER | EXP DATE

AECOM
AECOM
1194 PACIFIC STREET, SUITE 204
SAN LUIS OBISPO, CA 93401
T 805.542.9840 F 805.542.9990
www.aecom.com

CITY OF EL PASO DE ROBLES
WATER TREATMENT PLANT PROJECT

INSTRUMENT DETAILS - 2

DESIGNED:
DETAILED:
CHECKED:
APPROVED:
DATE: November 2012
AECOM PROJECT NO. 60264606
P.R. PROJECT NO.
CADD STDS. AECOM

NDT-02
SHEET - OF -

DWG: V:\PASO ROBLES\60264606-WTP\000 CAD\PLANSET\5-INSTR\NDT-02.dwg Layout Name: NDT-02 - Plotted by: Rodriguez, David Date: 11/28/2012 - 4:04 PM
XREFS: G-BD-PR IMAGES: CITY OF PASO LOGO_1.png

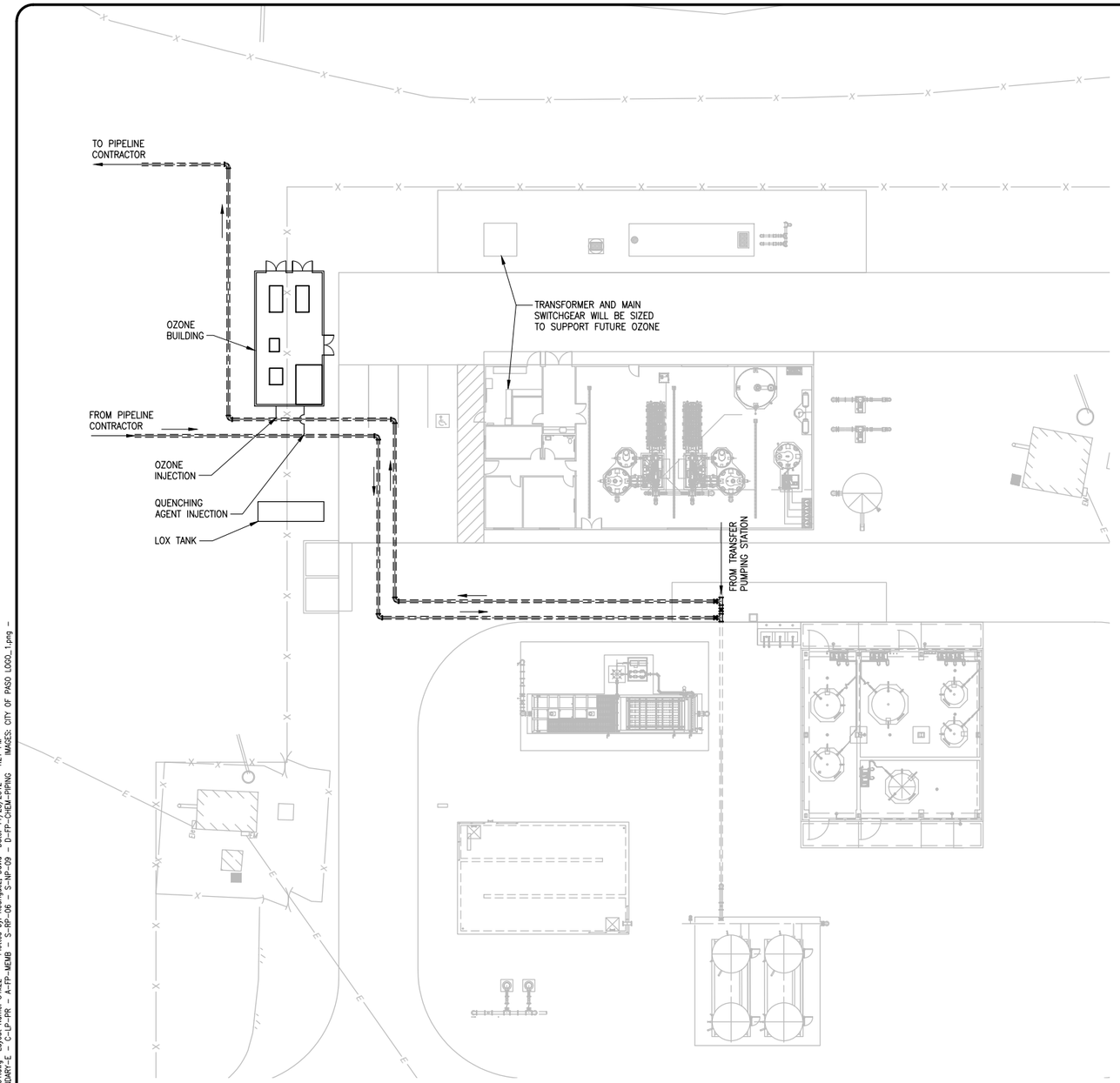

SITE PLAN

SCALE: 1" = 20'

1 –

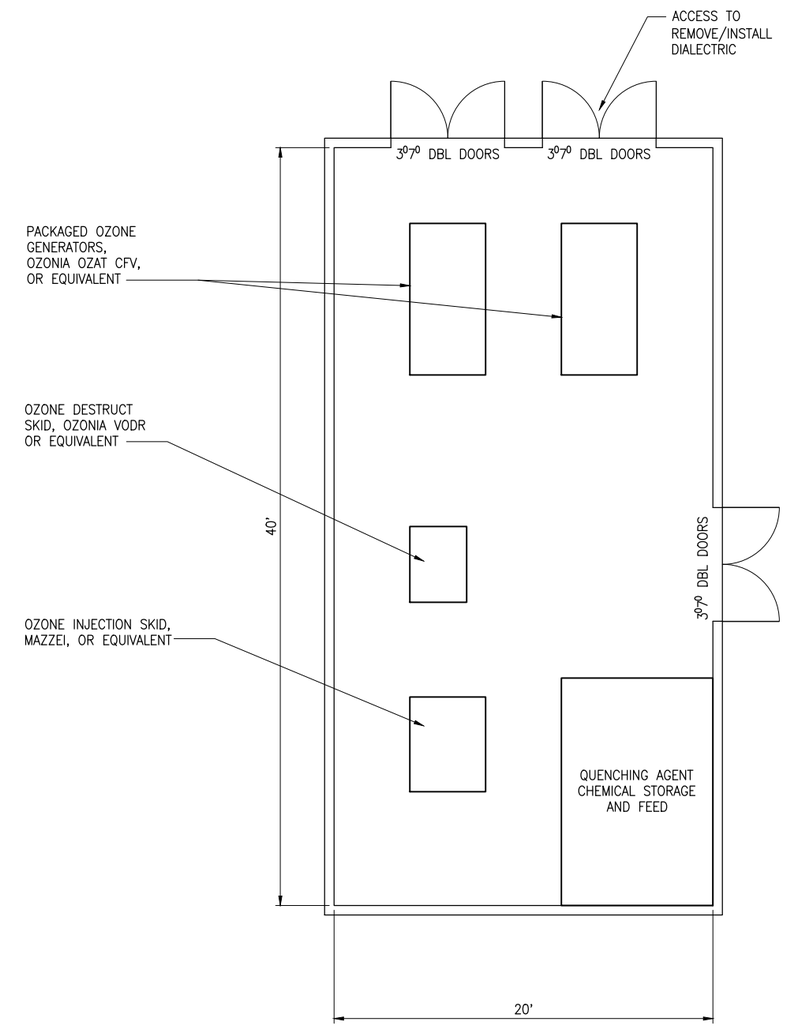

OZONE BUILDING FLOOR PLAN

SCALE: 1" = 4'

2 –

NOTES:

1. MODIFICATIONS TO INITIAL TREATMENT PLANT DESIGN WILL BE LIMITED TO SIZING OF ELECTRICAL TRANSFORMER AND PRIMARY SWITCHGEAR FOR FUTURE OZONE EQUIPMENT AND PROVISIONS FOR INCREASING THE TRANSFER PUMP MOTOR SIZE. ELECTRICAL CONDUIT WILL BE STUBBED OUT FROM THE OPERATIONS AND MEMBRANE BUILDING ELECTRICAL ROOM. SITE MODIFICATIONS NECESSARY FOR CONSTRUCTION OF THE OZONE BUILDING, INSTALLATION OF THE OZONE EQUIPMENT, AND PIPELINE CONNECTIONS ARE ALL FEASIBLE AT A FUTURE DATE.
2. LAYOUT ASSUMES AN OZONE DOSAGE OF 1 – 4 MG/L. TESTING IS REQUIRED TO CONFIRM THE MAXIMUM OZONE DOSAGE, CONTACT TIME, AND QUENCHING AGENT REQUIRED. 40 LB/DAY OZONE GENERATORS ARE SHOWN.
3. CALCIUM THIOSULFATE, SODIUM BISULFITE, OR HYDROGEN PEROXIDE MAY BE USED AS A QUENCHING AGENT. USE OF HYDROGEN PEROXIDE WOULD RESULT IN AN ADVANCED OXIDATION COMPONENT TO THE TREATMENT.
4. A MINIMUM OZONE CONTACT TIME OF 5 MINUTES IS ASSUMED. JAR TESTING MAY INDICATE THAT A LONGER CONTACT TIME IS REQUIRED. A 360 FOOT LONG, 24 INCH DIAMETER PIPE WOULD PROVIDE THE ASSUMED 5 MINUTES OF CONTACT TIME AT A TREATMENT PLANT CAPACITY OF 2.4 MGD.

PRELIMINARY
30% SUBMITTAL

0 1/2 1
IF THIS BAR DOES NOT MEASURE 1" THEN DRAWING IS NOT TO FULL SCALE

REV	DATE	DESCRIPTION	APPR
1			
2			
3			
4			

PROJECT ENGINEER | REG NUMBER | EXP DATE

AECOM
AECOM
1194 PACIFIC STREET, SUITE 204
SAN LUIS OBISPO, CA 93401
T 805.542.9840 F 805.542.9990
www.aecom.com

CITY OF EL PASO DE ROBLES
WATER TREATMENT PLANT PROJECT

SITE PLAN
(FUTURE OZONE)

DESIGNED:
DETAILED:
CHECKED:
APPROVED:
DATE: November 2012
AECOM PROJECT NO. 60264606
P.R. PROJECT NO.
CADD STDS. AECOM

OZ-01
SHEET
- OF -

DWG: V:\PASO ROBLES\60264606-WTP\000 CAD\PLANSET\2-CIVIL\OZ-01.dwg Layout Name: 34x22 – Plotted by: Rodriguez, David Date: 11/28/2012 – 4:21 PM
XREFS: C-Y-TOPO-EX – C-Y-FEATURES-E – G-BD-PR – C-Y-BOUNDARY-E – C-LP-PR – A-FP-MEMB – S-RP-06 – S-NP-09 – D-FP-CHEM-PIPING IMAGES: CITY OF PASO LOGO_1.png –

FINAL

JUNE 2011

CITY OF PASO ROBLES

2010 URBAN WATER MANAGEMENT PLAN

Todd Engineers

City of Paso Robles

2010 Urban Water Management Plan

FINAL

June 2011

Prepared for:

City of El Paso de Robles
1000 Spring Street
Paso Robles, California 93446
805-227-7276
www.prcity.com

Prepared by:

Todd Engineers
2490 Mariner Square Loop, Suite 215
Alameda, California 94501
510-747-6920
www.toddengineers.com

Table of Contents

EXECUTIVE SUMMARY ..... ES-i

1. INTRODUCTION 1
1.1 Plan Preparation and Adoption 1
1.2 Agency Coordination and Public Participation 2
1.3 Acknowledgements 3

2. SERVICE AREA 4
2.1 Location 4
2.2 Climate 4
2.3 Population 5

3. WATER DEMAND 6
3.1 Past and Current Water Demand 6
3.2 Baseline Demand 7
3.3 Projected Water Demand 8
3.4 Water Use Reduction Plan 9

4. WATER SUPPLY 10
4.1 Sources of Water Supply 10
4.1.1 Groundwater Basin 10
4.1.2 Nacimiento Water Project 18
4.1.3 Recycled Water 19
4.2 Water Supply Facilities 19
4.2.1 River Wells 20
4.2.2 Basin Wells 20
4.2.3 Nacimiento Water Treatment Plant 21
4.3 Water Rates 21
4.4 Wastewater and Water Recycling 21
4.4.1 Wastewater Collection, Treatment and Discharge 21
4.4.2 Wastewater Quality 22
4.4.3 Sewer Rates 23
4.4.4 Water Recycling Options 23
4.5 Current and Projected Water Supplies 25
4.5.1 River Wells (underflow) 26
4.5.2 Basin Wells 26
4.5.3 Nacimiento Water 27

5. WATER SUPPLY RELIABILITY AND WATER SHORTAGE CONTINGENCY PLANNING 28
5.1 Reliability of Water Supply 28
5.1.1 Single-Year Drought 28
5.1.2 Multi-Year Drought 29
5.1.3 Water Supply Reliability in Normal and Drought Years 30
5.2 Factors in Water Supply Reliability 32
5.2.1 Legal 32

5.2.3 Environmental 33
5.2.4 Water Quality 33
5.2.5 Climatic 34
5.2.6 Catastrophic Water Shortage 35
5.3 Water Shortage Contingency Planning 35

6. DEMAND MANAGEMENT MEASURES 38

6.1 Introduction 38
6.2 Utility Operations Programs 39
6.2.1 Conservation Coordinator 39
6.2.2 Water Waste Prevention (formerly BMP 13) 39
6.2.3 Wholesale Agency Programs 40
6.2.4 Water Loss Control (formerly BMP 3) 40
6.2.5 Metering With Commodity Rates (formerly BMP 4) 41
6.2.6 Retail Conservation Pricing (formerly BMP 11) 41
6.3 Education Programs 41
6.3.1 Public Information Programs (formerly BMP 7) 41
6.3.2 School Education Programs (formerly BMP 8) 42
6.4 Residential Programs 43
6.4.1 Residential Assistance Program 43
6.4.2 Landscape Survey (formerly BMP 1) 43
6.4.3 High-efficiency Clothes Washers (HECWs) (formerly BMP 6) 43
6.4.4 WaterSense Specification Toilets (formerly BMP 14) 44
6.4.5 WaterSense Specifications (WSS) for Residential Development 44
6.5 Commercial, Industrial, and Institutional Programs (CII) (formerly BMP 9) 44
6.6 Landscape (formerly BMP 5) 45
6.7 Conservation Program Implementation Summary 46

7. COMPLETED UWMP CHECKLIST 47

8. REFERENCES 56

Appendices

A Resolution Adopting the Urban Water Management Plan and Proof of Public Hearing

B Implementation Plan for Water Conservation Best Management Practices, Draft November 11, 2010

C Ordinance No. 956 N.S. Adopting a Water Conservation and Water Shortage Contingency Plan

D Efficient Landscape Ordinance

E Residential Assistance Program Survey

F California Urban Water Conservation Council BMP Reports

Figures (follow text)

1. Paso Robles Groundwater Basin
2. Paso Robles Precipitation
3. Paso Robles Recent Annexations
4. Paso Robles Boundaries and Facilities
5. Paso Robles Water Production and Population

Tables (follow Figures)

1. Coordination with Appropriate Agencies
2. Climate Data
3. Population – Current and Projected
4. Past, Current and Projected Water Deliveries
5. Total Water Use
6. Low-Income Housing Projected Water Demands
7. Determination of Base Period for Senate Bill 7
8. Base Daily Capita Water Use – 10-year Range for Senate Bill 7
9. Groundwater – Volume Produced
10. Groundwater – Volume Projected to be Produced
11. Recycled Water - Wastewater Collection and Treatment
12. Recycled Water – Non-Recycled Wastewater Disposal
13. Recycled Water - Projected Future Use
14. Methods to Encourage Recycled Water Use
15. Water Supplies Needed to Meet Demands - Current and Projected
16. Future Water Supply Projects
17. Basis of Water Year Data
18. Supply Reliability – Historic Conditions
19. Supply Reliability – Current Water Sources
20. Supply and Demand Comparison – Normal Year
21. Supply and Demand Comparison - Single Dry Year
22. Supply and Demand Comparison - Multiple Dry-Year Events
23. Factors Resulting in Inconsistency of Supply
24. Water Quality – Current and Projected Water Supply Impacts
25. Water Shortage Contingency, Rationing Stages to Address Water Supply Shortages
26. Preparation Actions for a Catastrophe
27. Water Shortage Contingency, Consumption Reduction Methods
28. Water Shortage Contingency, Mandatory Prohibitions
29. Water Shortage Contingency, Penalties and Charges
30. Water Shortage Contingency, Actions and Conditions that Impact Revenues
31. Water Shortage Contingency, Actions and Conditions that Impact Expenditures
32. Water Shortage Contingency, Proposed Measures to Overcome Revenue Impacts
33. Water Shortage Contingency, Water Use Monitoring Mechanisms
34. DMM Implementation Summary

EXECUTIVE SUMMARY

This Urban Water Management Plan (Plan or UWMP) has been prepared for the City of Paso Robles to help guide the City's water management efforts to the year 2025. It has been prepared in accordance with the Urban Water Management Planning Act (Division 6 Part 2.6 of the Water Code §§10610 – 10656) and the Water Conservation Act (Division 6 Part 2.55 of the Water Code §§10608 – 10608.44).

This Plan documents the City's sources of water supply, defines water demands, presents a water shortage contingency plan, and describes implementation of water demand management measures. The Plan also projects supply and demand to the year 2035 (although buildout, in accordance with the City's 2003 General Plan, is projected to occur sooner). This supports compliance with SB221 requirements for demonstration of adequate water supplies for new development.

This Plan builds on and updates the 2005 UWMP, accounting for changes in the California Water Code and local planning and water management efforts. On November 4, 2009, California lawmakers passed four inter-related water policy bills (called the 2009 Water Package). Bills in the 2009 Water Package amend the Urban Water Management Planning Act and revise requirements of subsequent UWMPs. Specifically, Senate Bill 7 (Statewide Water Conservation) establishes a goal of 20 percent reduction in statewide urban water use (in gallons per capita per day) by 2020. Accordingly, this 2010 UWMP includes a baseline water use estimate, assesses current water use per capita, and develops specific water use targets to meet the 2020 goal of 20 percent water use reduction.

WATER SUPPLY AND DEMAND

The City's population is expected to grow less than one percent annually between 2010 and 2015. The population is then projected to increase linearly to the buildout potential of 44,000 residents in 2025 as per the City's 2003 General Plan. As the City's population increases, total "Baseline" water demand is projected to increase from 6,326 acre feet per year (AFY) to 13,400 AFY by 2025. Baseline demand is projected demand without demand reductions from water conservation programs and recycled water programs outlined in this Plan. Water use in 2009 and 2010 were reduced by approximately 20 percent due to City-wide mandatory outdoor water use restrictions. Currently, much of the City's water demand is for single-family residential uses; in the future, it is expected that commercial demands will increase relative to single-family residential demand.

Water Supplies Needed to Meet Demands - Current and Projected (AFY)							
Water Supply Sources	**2007**	**2010**	**2015**	**2020**	**2025**	**2030**	**2035**
Basin Wells	4,103	2,338	100	990	3,400[1]	3,400[1]	3,400[1]
River Wells	4,023	3,988	4,450	4,600	4,600	4,600	4,600
Nacimiento Water	0	0	4,000	5,400	5,400	5,400	5,400
Demand Without Potential Conservation	**8,126**	**6,326**	**8,550**	**10,990**	**13,400**	**13,400**	**13,400**
Potential Conservation and Recycled Water Savings	**2007**	**2010**	**2015**	**2020**	**2025**	**2030**	**2035**
BMP/DMM Conservation	0	61	364	1,038	1,617	1,617	1,617
Price Elasticity of Water Rates Conservation	0	0	616	1,827	1,618	1,618	1,618
Recycled Water (Phase 1 Direct Use)	0	0	0	0	650	650	650
SB-7 Target Water Demands (AFY) to Comply with 20% gpcd Demand Reduction by 2020	**Not Applicable**	**Not Applicable**	**7,570**	**8,125**	**9,515**	**9,515**	**9,515**
SB-7 Target Water Demands (gpcd)	**Not Applicable**	**Not Applicable**	**217 gpcd**	**193 gpcd**	**193 gpcd**	**193 gpcd**	**193 gpcd**

1. If SB7 targets for water conservation and water recycling shown can be achieved, pumping from basin wells would be reduced significantly from the 3,400 AFY shown at buildout. If necessary, to reduce basin pumping, additional supplemental supply sources such as Nacimiento water and water recycling will be evaluated.

A possible water supply scenario is presented in the table above. The top part of the table shows supplies needed to meet projected demands while the bottom portion of the table presents the potential conservation and recycled water required to comply with the Senate Bill 7 goal of 20 percent reduction in urban water use by 2020. If SB7 targets for water conservation and water recycling shown can be achieved, pumping from basin wells would be reduced significantly from the 3,400 AFY shown at buildout. If necessary, to reduce basin pumping, additional supplemental supply sources such as Nacimiento water and water recycling will be evaluated.

The City currently relies on water from two sources: Salinas River underflow and groundwater in the Paso Robles Groundwater Basin. The City's Salinas River underflow is subject to State permitting that allows the City to extract up to eight cubic feet per second (cfs) with a maximum extraction of 4,600 AFY. Until recently, the City's use of underflow was below the full appropriation due to limited production capacity, but reached 4,558 AF in 2005.

The City also produces groundwater from the Paso Robles Groundwater Basin through wells distributed through the service area. This distribution helps minimize local impacts on groundwater levels and reduces the potential for any single event to disrupt production from more than a few wells. The groundwater basin is shared among many users, including rural users, municipalities, and agriculture (which accounted for 68 percent of basin pumping in 2006). In the past, City pumping from the basin has been as high as 4,103 AFY in 2007.

Groundwater use in the Paso Robles Basin is close to the estimated perennial yield value and significant groundwater level declines are continuing locally, most notably in the Estrella subarea. This area provides half of the City's groundwater supply as well as supply for farmers, domestic users, and other communities. San Luis Obispo County has designated the entire basin, with the exception of the Atascadero subbasin, as Level of Severity III (LOS III). The LOS III designation indicates demand for the resource will equal or exceed its supply before supplemental supplies can be developed. The Atascadero subbasin was designated a LOS I, a first alert level to monitor groundwater use as sufficient lead time exists before use nears supply. Additionally, municipal pumping accounts for approximately 75 pecent of pumping in the subbasin and most of the pumping is from the Salinas River underflow. Municipal pumpers can balance supply and demand with use of surface water, conservation, and usage redistribution, if necessary.

The City participates in groundwater basin monitoring and management planning and activities, in cooperation with San Luis Obispo County and other water users. The City is an active participant in the current groundwater basin management planning and in the Paso Robles Groundwater Basin Agreement with San Luis Obispo County and specific basin landowners. This agreement supports groundwater management to avoid overdraft and promotes long-term groundwater supply reliability.

The City has regularly experienced seasonal water supply problems as existing wells have become unable to deliver peak water demands. City-wide mandatory outdoor water use restrictions were implemented in 2009 (Level 2 of the City's Water Conservation Ordinance and Water Shortage Contingency Plan) to reduce summer peak water demands and thereby manage a projected water production shortfall of 20 percent. It is anticipated that these restrictions will be lifted when Nacimiento surface water supply becomes available or when sufficient interim well capacity is provided.

The City intends to develop two additional water supply sources for the future. First, the City entered into an agreement with San Luis Obispo County to import 4,000 AFY of Lake Nacimiento water. Construction of a treatment plant is expected to begin in 2015 that will allow use of the new water supply. An additional 1,400 AFY of Nacimiento water is anticipated to be acquired around 2020. Lake Nacimiento water will significantly enhance the City's ability to meet peak season and long-term demands. The Lake Nacimiento supply is independent of local groundwater supplies and the water delivery contracts give the City and other San Luis Obispo County agencies high priority in droughts. Use of Nacimiento water will reduce groundwater pumping and provide an additional high quality water source for City residents. Additionally, Nacimiento water is lower in Hardness than groundwater and will require less softening by customers, thereby improving the quality of the City's wastewater treatment plant effluent. This is important because the City's treated wastewater effluent is recharged to the

groundwater basin and improved effluent quality will yield long-term water quality benefits to the groundwater basin.

In addition, the City is actively planning for an estimated 650 AFY of recycled water for irrigation by 2025. Recycled water for irrigation not only releases potable groundwater for higher beneficial uses, but is very reliable throughout the year and during drought. Provision of recycled water for landscape irrigation would substantially reduce peak water demands in summer.

Comparison of planned water supply sources and projected water demand in the long term—to 2025 and beyond—indicates that even with water conservation, Lake Nacimiento supply, and water recycling, the City will continue to rely on Salinas River underflow and groundwater in the Paso Robles Groundwater Basin for a portion of the water supply.

WATER SHORTAGE CONTINGENCY PLAN

In addition to evaluating the overall reliability of water supply, this Plan also assesses the reliability of City water supply during single-year and multiple-year droughts, and in the event of a catastrophe.

Water levels in the City's Paso Robles Groundwater Basin wells have been dropping consistently over the last 12 years due to regional water level declines in the basin. The impact of single year or multi-year droughts can amplify the effects of regional groundwater level declines, resulting in further lowering of well production levels. Single year droughts have not significantly affected the City's wells. However, droughts with durations of 3, 4, or 5 years are more problematic in terms of creating additional impacts on top of chronic water level declines in the basin (Boyle, September 2006).

In response to chronic and continuing water level declines and lowered water production capacity, the City has installed treatment systems to recommission standby wells and rehabilitated other wells to maintain production capacity. In addition, in June of 2009 the City adopted a Water Conservation and Water Shortage Contingency Plan (Ordinance No. 956 N.S.). This plan establishes mandatory and permanent water management measures necessary to overcome supply deficiency, promote efficient use of water, and to prevent waste. The plan outlines a staged approach to dealing with supply shortfalls from 10 to 50 percent (see Appendix C for the plan). In June of 2009, the City initiated mandatory Level 2 outdoor water use restrictions during the summer months. These restrictions, which are anticipated to remain in effect until additional water supplies are developed, have been successful in reducing peak demand and enabling the City to maintain reservoir storage levels for emergency and reserve uses.

WATER DEMAND MANAGEMENT MEASURES

Water demand management (water conservation) reduces waste, lowers wastewater treatment costs, extends the life of supplies and can improve overall water quality. Benefits to the groundwater basin will occur as groundwater that is not pumped will remain in storage, helping to maintain groundwater levels and increase long-term groundwater supply reliability (including during droughts). Water conservation efforts directed toward landscape irrigation will help reduce seasonal peak demands and diminish the

potential for seasonal shortages. Through water conservation, citizens can be assured that the City is using its existing water supplies efficiently while pursuing additional water supplies.

In 2010, the City became a member of the California Urban Water Conservation Council (CUWCC). Since submitting the 2005 UWMP, Paso Robles has made significant progress in implementing the CUWCC Demand Management Measures. A Water Conservation Manager position has been staffed, and programs covering 11 of the 14 original DMMs have now been implemented. The remaining DMMs will be evaluated for implementation during the 2011-2015 period. Water savings from the DMMS are estimated to range from 364 and 1,617 AFY between 2015 and 2035.

1. INTRODUCTION

1.1 PLAN PREPARATION AND ADOPTION

This Urban Water Management Plan (Plan or UWMP) has been prepared for the City of Paso Robles to help guide the City's water management efforts to the year 2025 and beyond. It has been prepared in accordance with the Urban Water Management Planning Act (Division 6 Part 2.6 of the Water Code §§10610 – 10656) and the Water Conservation Act (Division 6 Part 2.55 of the Water Code §§10608 – 10608.44).

This Plan documents the City's sources of water supply, defines water demands, presents a water shortage contingency plan, and describes implementation of water demand management measures. The Plan also projects supply and demand to the year 2035 (although buildout, in accordance with the City's 2003 General Plan, is projected to occur sooner). This allows the document to be used for compliance with SB221 requirements for demonstration of adequate water supplies for new development.

This Plan builds on and updates the 2005 UWMP, accounting for changes in the California Water Code and local planning and water management efforts. On November 4, 2009, California lawmakers passed four inter-related water policy bills (called the 2009 Water Package). Bills in the 2009 Water Package amend the Urban Water Management Planning Act and revise requirements of UWMPs. Specifically, Senate Bill 7 (Statewide Water Conservation) establishes a goal of 20 percent reduction in statewide urban water use (measured in gallons per capita per day) by 2020. Accordingly, this 2010 UWMP includes a baseline water use estimate, assesses current water use per capita, and develops specific water use targets to meet the 2020 goal of 20 percent water use reduction.

The City established the following water resource goals in 2004:

- improve water quality,
- increase and diversify water resources,
- increase reliability of water supplies,
- reduce groundwater basin dependence,
- reduce salt loading into the basin and thereby comply with regulatory mandates,
- maintain a strong water rights position, and
- anticipate regulatory requirements.

To attain these goals, the City recently:

- developed a facilities Capital Improvement Program focused on providing high quality dependable water supply to residents,
- completed a 2010 Water Rate and Revenue Analysis report and established a new water rate billing structure,
- developed a source control program for wastewater, and

- hired a water conservation manager and implemented a water conservation program.

The City currently is:

- progressing with plans for a water treatment plant to treat surface water received from Lake Nacimiento,
- progressing with plans for upgrading their wastewater treatment plant for improved effluent water quality,
- participating in preparation of a Groundwater Basin Management Plan, and
- developing a Recycled Water Master Plan and Financial Plan.

The Urban Water Management Plan is a key component in the advancement of the City toward community water resource goals. Most notably, the Plan documents the quantity and quality of the City's water supplies, both current and future. This provides baseline information for future augmentation and diversification of City supplies. The Plan also provides specific assessment of the reliability of City water supplies during normal and drought years and in emergencies. In addition, the Plan documents the City's water rights and measures taken by the City to protect its use of water supplies.

In accordance with UWMP requirements, San Luis Obispo County and the public were notified at least 60 days prior to the public hearing that the UWMP would be revised. Paso Robles held a public hearing at least 45 days after the circulation of the Public Draft Plan and prior to adoption of the Plan. A public notice was posted before the public hearing. Documentation of the public notices and public hearing are included in **Appendix A**. The public hearing included a general discussion of the implementation plan for complying with Senate Bill 7, Statewide Water Conservation.

The Final Plan was adopted by the City Council on June 21, 2011. The resolution to adopt the Plan is included in **Appendix A**. The adopted Plan has been submitted to the Department of Water Resources and the California State Library, as required by law. Copies of the Plan were also sent to San Luis Obispo County and the City of Paso Robles public library, and posted on the City's website. **Appendix A** contains required documentation. California regulations require Urban Water Management Plans to be updated at least once every five years in years ending in five and zero. However, Senate Bill 7 extended the deadline for adoption of the 2010 UWMP to July 1, 2011.

1.2 AGENCY COORDINATION AND PUBLIC PARTICIPATION

Paso Robles has provided for agency coordination and community participation in its urban water management planning efforts. **Table 1** lists the organizations contacted and summarizes citizen participation. A Draft Plan was available to the public on May 1, 2011 for comment with a public presentation on May 17, 2011 to summarize the Draft Plan. **Table 1** also summarizes circulation of the Draft and Final plans. The Draft Plan was sent to the listed organizations with a request to provide comments. Final Plan copies are available at City Hall and the City Library. An electronic version is available on the City's website (http://www.prcity.com).

In addition to preparation of this report, coordination with other agencies is ongoing in the Paso Robles area. For example, the City of Paso Robles, in partnership with San Luis Obispo County and local stakeholders, is preparing a groundwater basin management plan for the Paso Robles Groundwater Basin. The City is signatory to the Paso Robles Groundwater Basin Agreement with the County and certain private landowners, who have organized as the Paso Robles Imperiled Overlying Rights (PRIOR) group. The City also participates actively in the Water Resources Advisory Committee, which provides advice to the County Board of Supervisors on water policy.

1.3 ACKNOWLEDGEMENTS

This Plan was prepared by Todd Engineers. We appreciate the considerable assistance provided by the City of Paso Robles staff. This Plan was prepared using the checklists and worksheets provided by the California Department of Water Resources (DWR) from their website,

http://www.owue.water.ca.gov/urbanplan/index.cfm

and their *Final Guidebook to Assist Urban Water Suppliers to Prepare a 2010 Urban Water Management Plan,* March, 2011.

2. SERVICE AREA

2.1 LOCATION

The City of Paso Robles is located in northern San Luis Obispo County (North County), on the eastern, inland side of the Santa Lucia Mountains. As illustrated in **Figure 1**, Paso Robles is situated on the upper Salinas River, which flows north toward Monterey County. Incorporated in 1889, the City of El Paso de Robles (Paso Robles) now encompasses a total area of 11,985 acres on both sides of the Salinas River (Rincon, 2003). Other communities near Paso Robles include Santa Margarita, Atascadero, Templeton, San Miguel and Shandon. The City also is situated on the western margin of the Paso Robles Groundwater Basin, which is the water-bearing portion of the upper Salinas River drainage area.

2.2 CLIMATE

Paso Robles has a semi-arid, Mediterranean climate characterized by hot sunny summers and cool winters. Because of its inland location, the influence of fog and maritime breezes is less pronounced than in south county cities such as San Luis Obispo. Precipitation on the Paso Robles Groundwater Basin area ranges from an annual average of 16 inches or more in the west to less than 10 inches in the east (Todd Engineers, 2007).

Table 2 summarizes local climate data, including rainfall, evapotranspiration, and temperature. As shown, the long-term average annual rainfall is 14.86 inches; most of the precipitation occurs in the winter months (November through April). Rainfall has been measured since 1894 at Paso Robles (station 046730, see **Figure 1** for location) and, as illustrated in **Figure 2**, is subject to wide annual variations. Since 1931, the lowest recorded annual rainfall was 4.24 inches in 1947 and the greatest annual rainfall was 29.19 inches in 1941. As shown on **Figure 2**, the recent years 2007 through 2009 have been relatively dry: however, rainfall in 2010 was above average because of the heavy rainfall in December (7.14 inches).

Table 2 also presents average evapotranspiration (ET) data. ET is the loss of water to the atmosphere by evaporation from soil and plant surfaces and transpiration from plants. It is an indicator of how much water is needed by crops, lawns, gardens, and trees for healthy growth and productivity. ET from a standardized grass surface is the common reference, denoted as ETo. The least ET occurs in the cool wet winter months and greatest ET occurs during the hot dry summer months. This results in peak monthly water demands in summer that are three times the comparable winter demand.

Average monthly temperatures range from 46.7 degrees Fahrenheit in January and December to more than 71 degrees in July and August. In these two months, daily maximum temperatures typically exceed 90 degrees. Summer days with 100+ degree temperatures are common.

2.3 POPULATION

The first major commercial activity in the North County was cattle grazing, followed by development of almond groves and most recently, extensive planting of vineyards. In addition to its agricultural base, Paso Robles also has a long history of tourism, based historically on development of local hot springs and more recently on wine touring. Other major factors affecting historical growth of the City included development of Camp Roberts (a large military base) during World War II and improvement of State Highways 101 and 46. Paso Robles remains the major service center for ranching and agriculture in the North County, particularly areas to the east along Highway 46.

Three reservoirs have been developed in the area for flood control, water supply, and recreation; these are Santa Margarita Lake (Salinas Dam) on the upper Salinas River, Lake Nacimiento on the Nacimiento River near the San Luis Obispo-Monterey County line, as well as San Antonio Lake in Monterey County. These lakes are popular vacation destinations, and along with wineries and Mid-State Fairgrounds events, have contributed significantly to tourism in Paso Robles. Paso Robles also has attracted numerous retirees from Southern California metropolitan areas. Approximately 60 percent of the land in the City is zoned for residential uses.

Table 3 shows the City's population in 2005 and 2010 along with projections to the year 2035 in five-year intervals. The population increased 10 percent between 2005 and 2010, a rate of about 2 percent annually. Population growth is expected to slow to a rate of less than 1 percent annually between 2010 and 2015, a result, in part, of the recession (Kennedy-Jenks, 2010). In December 2003, the City approved a residential population planning threshold of 44,000 residents by the year 2025 (Rincon, 2003). This projection results in an approximate 43 percent population increase over the 10-year period between 2015 and 2025. The population projection for 2020 was derived from a linear interpolation between the estimated 2015 population and projected 2025 population. This results in a growth rate of about 4.3 percent annually between 2015 and the buildout population of 44,000 in 2025. For this UWMP, the population was assumed to remain stable between 2025 and 2035 reflecting buildout conditions. It is anticipated that the buildout population number will be reviewed before 2025 during the City's General Plan update process.

3. WATER DEMAND

The City's past, current and projected water demands are presented in this section. In accordance with Senate Bill 7 (Statewide Water Conservation), this section also includes a baseline water use calculation and develops specific water use targets to meet the 2020 goal of a 20 percent water use reduction. Current water demand is provided by water use sector and projected to 2035 in five-year increments although buildout is projected to occur sooner than 2035. Total water use (including unaccounted-for water or unmetered use) is also provided and projected to 2035.

3.1 PAST AND CURRENT WATER DEMAND

Table 4 shows the number of water service accounts by customer type. The basic breakdown into the water use sectors (single family, multi-family, commercial, industrial, institutional/governmental, and irrigation/other) was derived from current billing system categories. The number of multi-family accounts is not the same as the number of multi-family units; in many cases, one connection supplies water to multiple units.

As shown in the bottom row of **Table 4**, the City provided water to 9,736 accounts in 2005 and 10,276 accounts in 2010, a 5.5 percent increase over the 5-year period. Water deliveries for 2005 and 2010 were 7,163 acre-feet per year (AFY) and 5,749 AFY, respectively. Water deliveries in 2010 were much lower than 2005 deliveries because of mandatory City-wide outdoor water use restrictions implemented in 2009. Level 2 of the City's Water Conservation Ordinance and Water Shortage Contingency Plan was implemented to reduce summer peak water demands and thereby manage a projected water production shortfall of 20 percent. These restrictions will be lifted when Nacimiento surface water supply becomes available or sufficient interim well capacity is provided.

These annual delivery volumes do not include unaccounted-for water. A small portion of water produced in any water system is unaccounted between metered water production and metered water usage. Unaccounted water typically includes unmetered use (for example, main flushing), meter error, and, to a much lesser extent, leaks. Unaccounted urban water use in California generally ranges from 6 to 15 percent (California DWR, August 1994). In 2010, 577 AFY, or about 9.1 percent of water production, was unaccounted (**Table 5**).

Typical annual water deliveries per residential account calculated for 2005 are 0.47 acre feet (AF)/account for single family residential and 2.06 AF/account for multi-family residential. In 2010, deliveries per residential account were less (0.40 AF per single family account, 1.43 AF per multi-family account) and non-representative of typical use because of the City-wide mandatory outdoor water use restrictions[1]. Water deliveries to Institutional/governmental facilities were broken out from the

1. Due to upgrades and changes in the City's billing system, water deliveries to each of the non-residential sectors were revised from the 2005 distribution in the City's 2005 UWMP.

Irrigation/Other sector and some commercial and industrial accounts were redefined.

The number and type of water service connections provide insight into different customers' water use, which can be useful in defining effective water conservation measures. The parks, landscape irrigation and other category may include commercial, school, park, and multi-family landscape irrigation as well as construction meter use; there are no significant agricultural customers for City water. As indicated, most service connections are residential.

State legislation (SB 1087 and Government Code section 65589.7), effective January 1, 2006, specifies that local water agencies and sewer districts must grant priority for service hook-ups to projects that help meet the community's fair housing need. In other words, policies and procedures should be written to provide priority service to new developments with affordable housing and these policies should be updated every five years. **Table 6** shows estimated water deliveries to low income housing units in 2010 (218 AFY or about 5.4 percent of total residential demand in 2010). As shown in the table, construction of additional multi-family low-income housing units is expected by 2015. At this time, there are no specific plans for additional low-income housing units between 2015 and 2035.

Other water use sectors such as sales to other agencies, groundwater recharge, and conjunctive use are not performed in Paso Robles at this time or planned in the future and thus have not been included in these tables.

3.2 BASELINE DEMAND

In accordance with Senate Bill 7, water suppliers must define a 10- or 15-year water use Base Period. This Base Period is used to calculate a Base Daily per Capita Water Use. By 2015, the baseline per capita water use in the City's service area must be reduced by 10 percent and, by 2020, per capita water use must be reduced by 20 percent.

Four methods are provided in Senate Bill 7 for calculating the 2015 and 2020 water use reduction targets. The first method was used, in which per capita daily water use in 2020 is 80 percent of the Base Daily per Capita Water Use. This method is the most applicable to available data as well as the water use and demographics of the City. Target water use in 2015 should be 90 percent of the Base Daily per Capita Water Use or 217 gpcd (241 x 0.90 = 217). Target 2020 water use per capita per day should be 80 percent of the Base Daily per Capita Water Use or 193 gpcd (241 x 0.80 = 193 gpcd). The target 2020 per capita water use of 193 gpcd also applies to 2025, 2030, and 2035. These values are developed for the entire service area. The target water uses are shown at the bottom of **Table 5** in AFY and gpcd.

The City currently does not utilize recycled water, therefore Senate Bill 7 dictates that a continuous 10-year base period is required. The base period must begin after December 31, 2004 and end no later than December 31, 2010. Base period determination is shown in **Table 7**. The most recent representative period was used, namely, 1999 through 2008. Water use in 2009 and 2010 were atypically low because of Level 2 City-wide mandatory outdoor water use restrictions. The City has expanded in area over the base period; **Figure 3** shows land that was annexed into the City between 1999 and 2005. No additional land has been annexed since 2005.

Table 8 presents the calculations for the average Base Daily per Capita Water Use over the selected 10-year Base Period. The Base Daily per Capita Water Use was calculated to be 241 gallons per day per capita (gpcd). Annual daily per capita water use varied between 229 gpcd (2006) and 254 gpcd (2002) over the Base Period depending upon weather and other factors.

It should be noted that the gross per capita use is the average amount of water used by City residents each year, including not only direct residential water use, but also indirect water uses that benefit residents such as fire fighting, park and school irrigation, commercial and industrial uses, and other municipal uses.

3.3 PROJECTED WATER DEMAND

Table 4 also provides projections for water service connections and customer deliveries in five-year intervals between 2015 and 2035. For City planning purposes, **Table 4** presents projected deliveries based on baseline water usage rate prior to potential conservation and recycling savings. (These potential savings are shown in **Table 5**.) Potential conservation savings should be viewed as an optimistic projection of what is achievable.

Table 4 is based on the City's General Plan and assumes a population threshold of 44,000. Water demands are presented for each sector. The sector-specific water demands projected for 2025 are based on potential use of all land use categories.

The number of single family and multi-family units for each water use sector in 2025 (buildout) was based on potential land use buildout up to a planning threshold of 44,000 residents. Multi-family units were converted to multi-family accounts assuming an average of 5.9 units per account. To derive water demands for the intervening years, residential connections were assumed to increase proportionally to projected population increases. The projected deliveries assume 2025 use rates per account. Similarly, commercial and industrial accounts were assumed to increase proportionally to projected population increases. Commercial use per connection was based on 2008 usage rates.

Single family accounts are estimated to increase 43 percent while multi-family accounts are estimated to increase 74 percent between 2010 and 2025. Commercial plus industrial accounts are projected to increase 188 percent between 2010 and 2025. Little or no growth is expected in the institutional/governmental and irrigation/other sector. However, water use in the irrigation/other sector will increase above the atypically low 2010 use resulting from the temporary City-wide mandatory outdoor water use restrictions.

Table 5 shows projected unaccounted-for water estimated at about seven percent of total water use for 2015 through 2035. **Table 5** also shows water demands from **Table 4** and provides the total water use from 2005 to 2035, which is the sum of water demands and system losses. The last two rows of **Table 5** are the target water use values for 2015 and 2020. The Potential Conservation and Recycling row is the amount of water savings needed to achieve the State-mandated target of a 20 percent reduction by 2020.

The estimates of projected water use at buildout in this 2010 UWMP differ from the projections presented in the 2005 UWMP. The 2010 water use projections are lower than the 2005 projections. This reflects the use of a population planning threshold on the housing units to reflect a population of 44,000, as presented in the current General Plan. In contrast, the 2005 UWMP projections were based solely on full development of all zoned land uses. The 2010 UWMP projections represent a reasonable refinement; for example, recent review by the Planning Department resulted in identification and removal of additional "unusable" areas (due to excessive slope or other site conditions). While all commercially zoned acreage is assumed developable in full, the residential demand projections are revised downward, reflecting the population planning threshold of 44,000.

3.4 WATER USE REDUCTION PLAN

The City has developed a plan to meet the target 2015 and 2020 water use reductions of 10 and 20 percent, respectively. The *Implementation Plan for Water Conservation Best Management Practices* is included in **Appendix B**. Section 6, Demand Management Measures, also provides details on conservation programs within the City. However, for water supply planning purposes, these potential reductions should be considered a best-case scenario. The City will report its progress in meeting urban water use targets to DWR using a standardized form when available from DWR.

4. WATER SUPPLY

4.1 SOURCES OF WATER SUPPLY

The City of Paso Robles has historically relied on the Salinas River underflow and Paso Robles Groundwater Basin water for its municipal water supply. This section describes local groundwater resources, including the groundwater basin, levels and flow, water rights, groundwater quality, and monitoring and management. This section also discusses the City's Nacimiento Water Project supply and recycled water, a planned future supply.

4.1.1 GROUNDWATER BASIN

The Department of Water Resources has defined the Paso Robles Area Subbasin as a portion of the Salinas Valley Groundwater Basin and designated it as basin number 3-4.06. For this Urban Water Management Plan, the basin is defined as the Paso Robles Groundwater Basin, as delineated in the *Paso Robles Groundwater Basin Study* (Fugro, 2002). The Paso Robles Groundwater Basin is not adjudicated.

LOCATION

Figure 1 shows the boundaries of the Paso Robles Groundwater Basin, which encompasses about 790 square miles in San Luis Obispo County and southern Monterey County. The Paso Robles Groundwater Basin is the water-bearing portion of the upper Salinas River drainage area. The Salinas River system drains the basin area and surrounding uplands, and flows north along the western edge of the drainage area. Major local tributaries include the Nacimiento River, which flows into the Salinas River just north of the county line, and the Estrella River, which flows west from Shandon to join the Salinas River south of San Miguel. Reservoirs include Santa Margarita Lake on the upper Salinas River and Lake Nacimiento on the Nacimiento River.

GEOLOGY

The major aquifers (or water-bearing units) in the basin include alluvial deposits and the Paso Robles Formation. The alluvial deposits are up to 100 feet in depth and include recent stream-laid sands and gravels along the floodplains of the Salinas River and its tributaries, and older finer-grained terrace deposits along the Salinas River and Estrella River. Wells in alluvium typically produce in excess of 1,000 gallons per minute (gpm) (Fugro, 2002).

The Paso Robles Formation is the most extensive aquifer and consists of sedimentary layers extending from the surface to depths of more than 2,000 feet. It is typically unconsolidated and generally poorly sorted. The water bearing sediments in the basin are 700 to 1,200 feet thick and typically extend to sea level. Paso Robles Formation sediments are relatively thin, often discontinuous sand and gravel layers interbedded with thick layers of silt and clay. Wells generally produce several hundred gpm (Fugro, 2002).

SUBAREAS

The Paso Robles Groundwater Basin is generally interconnected by extensive, thick sedimentary layers. For practical management purposes, this large basin has been subdivided into eight subareas. This informal division was based on water quality, source of recharge, groundwater movement, and contours on the base of permeable sediments. The subareas are not hydrologically distinct, and groundwater flows between adjacent subareas.

The City overlies portions of the Atascadero and Estrella subareas, as shown on **Figure 4**, with production wells in each. The Atascadero subarea was designated as a distinct subbasin located to the west of the Rinconada Fault (Fugro, 2002). The portion of the fault between the Atascadero and Creston subareas juxtaposes relatively less permeable rocks with the Paso Robles Formation. Between the Atascadero and Estrella subareas, the Paso Robles Formation is found on both sides of the fault and the two subareas are hydraulically connected by alluvial deposits along the Salinas River.

GROUNDWATER QUALITY

A general measure of groundwater quality is total dissolved solids (TDS). For drinking water purposes, water with a TDS concentration of 500 milligrams per liter (mg/L) or less is recommended, but can be usable up to 1,000 mg/L. In Paso Robles Groundwater Basin wells, TDS concentrations generally range from 300 to 1,000 mg/L (Fugro, 2002 and 2005). Wells screened along the Salinas River in the recent alluvium generally have TDS concentrations between 300 and 800 ppm, reflecting the quality of stream recharge water.

A survey of local groundwater quality was conducted by the United States Geological Survey (USGS) as part of its Groundwater Ambient Monitoring and Assessment (GAMA) Program (USGS, 2007). The USGS sampled eleven randomly-selected wells located along the major river valleys, including four in or near the City. While trace amounts of pesticides, arsenic, and boron were reported, no constituents of concern were detected above regulatory thresholds.

In general, City water quality is good, but has relatively high TDS and hardness. In response to the hardness, many residents use home water softeners. However, use of water softeners results in addition of salts to the City's wastewater, which is treated and discharged to the groundwater basin. This situation should be improved in the future with the introduction of Lake Nacimiento water. Lake Nacimiento water is lower in hardness and TDS than groundwater, and obviates the need for water softeners. If citizens reduce or eliminate the use of water softeners, they will not only enjoy cost savings, but will also help preserve the quality of local groundwater and advance the use of recycled water for irrigation.

GROUNDWATER LEVELS AND FLOW

Groundwater levels in the Paso Robles Groundwater Basin range between above 1,500 feet above mean sea level (msl) around the basin margins to below 600 feet msl in the Estrella subarea and along the

Salinas River north of the City (Todd, 2007). Groundwater flows generally from the margins toward the center of the basin and to the northwest, where the outlet to the lower Salinas Valley is located.

The City's Thunderbird well field is located near the Salinas River at the lower (northern) end of the Atascadero subarea. The wells range in depth from 140 to 215 feet, are screened mostly in the alluvium, and derive yield mainly from Salinas River underflow. Groundwater levels have remained generally constant, at about 20 to 40 feet below ground surface. The relatively constant groundwater levels in the Thunderbird well field reflect the proximity to the Salinas River, which provides recharge, and the limited thickness of the alluvial aquifer, which constrains the drawdown and yield of these wells.

The City's Ronconi Wells 1 and 4 are located near the Salinas River in the Estrella subarea. These wells are 76 and 70 feet deep, respectively, and derive yield from the Salinas River underflow. Groundwater levels typically are about 15 feet below ground surface. The Borcherdt well, also classified as a Salinas River underflow well but more distant from the river, typically has groundwater levels about 50 to 65 feet below ground surface.

The remaining City wells are dispersed across the City east of the Salinas River. All are located within the Estrella subarea and are screened in the Paso Robles Formation. A groundwater depression is centered in the Estrella subarea, reflecting agricultural, municipal, rural and other pumping. This pumping depression is characterized by declining groundwater levels, which are apparent in City wells. Groundwater level declines in some City wells have amounted to more than 100 feet since 1997, with recent annual rates of decline generally between 5 to 9 feet per year. Water level declines are expected to continue into the future unless annual pumping in the Estrella subarea is reduced.

WATER BALANCE AND PERENNIAL YIELD

Local water users have recognized the seriousness of local groundwater declines and have sponsored investigations to understand the groundwater basin and lay the groundwork for improved management. Specifically, a series of recent studies have addressed the water balance of the Paso Robles Basin and its perennial yield.

The *Paso Robles Groundwater Basin Study* (Fugro, 2002) included basic data compilation and review, definition of the basin and subbasins, aquifer characterization, assessment of water quality conditions, and a water balance study as of 1997. The *Phase II Numerical Model Development* report (Fugro, 2005) involved development of a groundwater flow model of the basin and summarized its development, calibration, and application to specific issues. Objectives included refining the basin's water balance and perennial yield, and simulating impacts to groundwater levels resulting from projected buildout conditions in the basin. Important conclusions included the following:

- The perennial yield for the Paso Robles Groundwater Basin was estimated at 97,700 acre-feet per year (AFY).
- The basin was not in overdraft with basin pumping in 2000 estimated at 82,600 AF.

- Simulated scenarios with urban and agricultural buildout resulted in overdraft conditions; development of Nacimiento project water (as presently contracted by local urban suppliers) alleviated, but did not prevent overdraft.
- Municipal pumping is more closely linked to the Salinas River and its recharge than agricultural pumping; this indicates that municipal groundwater pumping locations and amounts can be optimized to manage groundwater levels.
- Agricultural pumping, by being more widespread across the basin and comprising much of the pumping located away from the Salinas River, shows a more direct relationship with groundwater storage and less interaction with the Salinas River. Thus, basin-wide changes in agricultural pumping would have a more direct effect on groundwater storage than would parallel changes in municipal pumping.
- Agricultural pumping is the single largest outflow of groundwater from the basin. It is also the single largest *estimated* parameter because the pumping volumes are not metered but rather estimated based on land use and irrigation practices. A relatively slight adjustment in agricultural pumping could make the difference between potential basin overdraft or not.

The *Paso Robles Groundwater Basin Study* documented groundwater level conditions up to 1997. Recognizing the need for current information, the City and County sponsored the *Update for the Paso Robles Groundwater Basin* (Todd, 2007). This study provided water level hydrographs and a groundwater level change for the period from 1997 (the end of the Fugro study period) to 2006. The study documented continuing groundwater storage declines centered on the Estrella subarea.

The *Evaluation of Paso Robles Groundwater Basin Pumping* (Todd, 2009) supplemented the 2007 study, concluding that estimated pumping in 2006 was 88,154 AFY or 90 percent of the estimated perennial yield of 97,700 AFY. The study reported on municipal pumping and provided estimates of small community, commercial, and rural pumping. Total City of Paso Robles pumping (as of 2006) was 7,485 AFY, or about 8 percent of total pumping. The study also delineated irrigated crop acreages and evaluated irrigation water demands with application of estimated irrigation rates. While the study indicated that total pumping remained below the perennial yield estimate, consideration of trends indicated that perennial yield could be exceeded in the near future.

The *Paso Robles Groundwater Basin Water Balance Review and Update* (Fugro, 2010), conducted for the County, presented updated information on the water balance for water years 1998 to 2009, and concluded that water demand is approaching the estimated perennial yield, but remains below it by a small margin.

While recent studies have indicated that basin-wide pumping has not exceeded perennial yield, the continuing groundwater level declines raised concerns about the adequacy of available information to document the status of the water balance. In response, the City sponsored an independent peer review of all five previous studies (Yates, 2010). The Yates peer review identified significant sources of uncertainty in the available data, assumptions, and methodologies. In addition, the review concluded that:

- While use of subareas is a practical necessity, all subareas are connected and cost-effective management actions will likely extend across subarea boundaries.
- Specific approaches to evaluate rainfall recharge and stream recharge are questionable.
- Available groundwater level data are a major source of uncertainty.
- More information is needed on vineyard water demands.

Yates' recommendations included:

- Improvement of the County's water level monitoring program,
- Collection of vineyard irrigation data to better define agricultural water use, and
- Updating and improvement of the numerical model with subsequent application to water balance issues and basin management options, including definition of operating ranges for groundwater levels and possible changes in locations and depths of well production.

GROUNDWATER BASIN MONITORING AND MANAGEMENT

The City recognizes that groundwater use in the Paso Robles Basin is close to the estimated perennial yield value and that significant groundwater level declines are continuing locally, most notably in the Estrella subarea, which provides half of the City's groundwater supply as well as supply for farmers, domestic users, and other communities. Accordingly, the City participates in groundwater basin monitoring and management planning and activities, in cooperation with San Luis Obispo County and other water users.

MONITORING

The San Luis Obispo County Flood Control and Water Conservation District (District) conducts a county-wide Regional Water Resources Data Collection Program that includes rainfall, evaporation, streamflow, and groundwater level monitoring. The groundwater monitoring program involves collecting groundwater level measurements twice a year (April and October). About 150 wells are monitored in the Paso Robles Groundwater Basin, including well measurements taken by County staff and data provided by partner agencies, including the City of Paso Robles. The County's draft Data Enhancement Plan identifies the Estrella subarea as the top priority of the County's inland areas for data enhancement, recommending addition of eleven groundwater monitoring sites (San Luis Obispo County Memorandum, October 7, 2009).

The northern portion of the Paso Robles Groundwater Basin is in Monterey County. Monterey County Water Agency monitors three wells in or near the Bradley subarea. These include two wells along the Salinas River near San Ardo and one well in Hames Valley.

PRIOR AGREEMENT

Recognizing that the City is an active municipal user of the Paso Robles Groundwater Basin, on September 6, 2005, the City Council passed Resolution No. 05-181. This resolution approves City

participation in a Paso Robles Groundwater Basin Agreement with the County and certain private landowners, who have organized as the Paso Robles Imperiled Overlying Rights (PRIOR) group. San Miguel Community Services District subsequently joined the Agreement. Key elements of the Agreement are a clear acknowledgement that the Basin is not in overdraft now, and that the parties will not take court action to establish any priority of groundwater rights over another party as long as the Agreement is in effect.

In addition, the parties agreed to participate in meaningful groundwater monitoring and management activities. The initial parties (i.e., the City, County, and PRIOR) sponsored the *Update for the Paso Robles Groundwater Basin* and the *Evaluation of Paso Robles Groundwater Basin Pumping* (Todd, 2007 and 2009).

GROUNDWATER MANAGEMENT PLAN (GWMP)

The GWMP is a voluntary planning process for groundwater basin management. The GWMP process was established in 1992 by the State Legislature through Assembly Bill (AB) 3030, amended in 2002 by Senate Bill (SB) 1938 and codified in the Water Code. While the Water Code lays out specific requirements (used for State funding eligibility), a GWMP is voluntary. A completed GWMP must be sponsored and adopted by one or more eligible public agencies (such as the City or County), but is intended to be a collaborative with local landowners, groundwater users, and other interested people. Such a plan describes groundwater conditions, addresses groundwater issues, identifies basin management objectives and actions to achieve objectives, and lays out an implementation plan for actions including funding sources, continued monitoring, and regular reporting.

In 2007, the City, in cooperation with the County, secured a Local Groundwater Assistance Act Grant from the California Department of Water Resources (DWR) to support preparation of a groundwater management plan. The planning process was initiated in December 2008—but interrupted by State funding problems—so the final GWMP is to be completed in March 2011. The GWMP process has established a Groundwater Advisory Committee and has included a series of public meetings and workshops. Initial meetings identified groundwater level declines as the most important issue, with related problems of storage loss, groundwater quality deterioration, and potential subsidence.

The GWMP was completed in March 2011. The GWMP provides an overview of the recent studies addressing the water balance of the basin, describes the physical setting of the basin, and summarizes water supply and demand conditions. An accomplishment of the GWMP has been definition of basin management objectives (BMOs) and identification of groundwater management activities to address the BMOs. These have been addressed largely on a subarea basis. In general, BMOs across the basin focused on stabilization or maintenance of groundwater levels.

Identified actions for the Atascadero subarea include:

- Increase groundwater monitoring and reporting
- Increase water conservation education and implementation
- Manage growth and corresponding water demands

- Maximize use of Nacimiento Project Water in the subarea
- Consider storm water management to increase local groundwater recharge.

The following groundwater management activities have been identified for the Estrella subarea:

- Increase data collection, monitoring and reporting on groundwater conditions
- Increase water conservation education and implementation
- Use Nacimiento Project Water.

The GWMP also identifies groundwater management activities that address basin-wide BMOs. Important basin-wide BMOs include the following:

- Maintain and improve groundwater levels
- Maintain and improve groundwater quality
- Protect against potential inelastic land surface subsidence
- Protect against adverse impacts to surface water flows
- Groundwater monitoring and assessment
- Evaluate and implement feasible water conservation measures.

For each of these BMOs, potential groundwater management activities are identified; for example, the first BMO, *maintain and improve groundwater levels*, is addressed with the following actions:

- Activities to reduce groundwater pumping (both agricultural and municipal)
- Activities to increase water supply (import Nacimiento Project Water, import State Water Project water)
- Potential reuse and recycled water projects (agricultural reuse and municipal recycling)
- Potential recharge projects (protect recharge areas; recharge imported, recycled, or storm water)
- Manage future increases in groundwater pumping (through land use planning policies).

The GWMP also lays out the basic components of an ongoing groundwater management plan:

- Stakeholder involvement (e.g., formation of a GAC Steering Committee and Technical Advisory Committee; coordination with other agencies; integration with other planning efforts)
- Groundwater monitoring and data collection (e.g., monitoring of groundwater elevations, quality, and subsidence; data management and reporting)
- Groundwater resource protection (e.g., well construction, abandonment, destruction policies; wellhead protection measures; and monitoring of contaminated and poor quality water)
- Groundwater sustainability (e.g., construction and operation of recharge, storage, extraction projects; and update of the groundwater model)
- Water demand management (agricultural, urban and rural residential).

Lastly, the GWMP provides an implementation plan for the voluntary activities, including ongoing activities (meetings, annual reporting, financial planning and development of funding, groundwater monitoring) and specific activities for the next three years.

COUNTY RESOURCE MANAGEMENT SYSTEM (RMS) AND RESOURCE CONSERVATION STUDY (RCS)

The San Luis Obispo County Planning and Building Department is responsible for the RMS, which provides information to the County Board of Supervisors to guide decisions about balancing land development with needed resources (e.g., water, schools, and roads). The RMS collects available information, identifies resource problems, and recommends solutions to 1) expand the resource, 2) conserve the resource, or 3) restrict/ redirect development. The RMS uses three alert levels called *levels of severity* (LOS) to identify differing levels of resource deficiencies.

- Level I is the first alert level and occurs when sufficient lead time exists either to expand the capacity of the resource, or to decrease the rate at which the resource is being depleted.
- Level II identifies the crucial point at which some moderation of the rate of resource use must occur to prevent exceeding the resource capacity.
- Level III occurs when the demand for the resource equals or exceeds its supply and is the most critical level of concern.

The County is supposed to take a series of actions to address resource deficiencies before Level III is reached. Certification of an LOS involves recommendation by staff, completion of a Resource Capacity Study (RCS), and public hearings before the Planning Commission and Board of Supervisors.

A Resource Capacity Study depends on available information; it is focused on a particular resource and a defined area. A final draft RCS, *Water Supply in the Paso Robles Groundwater Basin,* was released in January 2011. This RCS is intended to provide the Board of Supervisors with available information to evaluate the basin groundwater supply in terms of its capacity to satisfy existing and potential demands. A Level of Severity III (LOS III) has been designated for the entire basin with the exception of the Atascadero subbasin, which was designated LOS I. An LOS III designation indicates that groundwater is being used at or beyond its dependable supply or will be depleted before new supplies are developed. The final draft RCS recognizes the chronic groundwater level declines, but does not declare a state of overdraft, reflecting data uncertainty. The final draft RCS provides recommendations for County actions (applicable to unincorporated areas) including continuation of basin-wide groundwater management planning, improved monitoring, water conservation outreach, additional investigations, and limitations on new land uses that would increase net water demand.

WATER RIGHTS

The City's groundwater supply is subdivided into two sources according to water rights. These are Salinas River underflow and percolating water of the Paso Robles Groundwater Basin.

Salinas River underflow refers to shallow groundwater in direct connection with the Salinas River. This underflow is subject to appropriative water rights and permitting by the State Water Resources Control Board (SWRCB). An approved SWRCB application (Application filed 1941; Permit number 5956 issued November 6, 1981) allows the City to extract up to eight cubic feet per second (cfs or 3,590 gpm) with a maximum extraction of 4,600 AFY (January 1 to December 31).

The permit includes moveable points of diversion. The City is currently in the process of converting this permit to a license from the SWRCB. Under the permit the City can pump up to 4,600 AFY (at the combined total maximum rate of eight cfs) of underflow from the existing wells and any new wells that are constructed within the moveable point of diversion defined under the permit. Since 2005, the City's use of underflow has ranged between 84 percent and 99 percent of the full appropriation; the maximum annual underflow well production was 4,558 AF (2005)[2] and the minimum was 3,868 AF (2009).

Salinas River underflow is replenished by surface water flows of the Salinas River and its tributaries, which together drain a watershed area of about 390 square miles. The Salinas River typically has surface flow from January into June and is dry the remainder of the year. Accordingly, recharge of underflow from the river occurs primarily in winter and early spring. Salinas River surface flows are affected by operation of Salinas Dam (Santa Margarita Lake), which is operated by San Luis Obispo County Flood Control and Water Conservation District primarily as a source of water for export to the City of San Luis Obispo. To protect downstream water rights, a 1972 SWRCB order limits the diversion of water to reservoir storage to only those periods when a visible surface flow exists at seven checkpoints in the Salinas River between the reservoir and the confluence with the Nacimiento River, which is approximately 16 miles downstream of the City's underflow wells. At all other times, the total inflow to the reservoir must be bypassed and allowed to flow downstream.

4.1.2 NACIMIENTO WATER PROJECT

In 1959, San Luis Obispo County Flood Control and Water Conservation District (District) signed an agreement with Monterey County Water Agency that entitled the District to approximately 17,500 AFY of the annual yield of Lake Nacimiento for uses in San Luis Obispo County; of this amount, 1,750 AYF is earmarked for lakeside uses. Use of the Lake Nacimiento entitlement has been limited to the vicinity of the lake because of the lack of conveyance facilities. The Nacimiento Water Project (NWP), completed in 2011, consists of approximately 45 miles of pipeline to deliver raw water from Lake Nacimiento to communities in San Luis Obispo County. This supplemental water will be delivered to Paso Robles, Templeton, Atascadero, San Luis Obispo, and Cayucos Community Service Area 10A. These communities have committed to take delivery of 9,655 AFY, with the City of Paso Robles committing to 4,000 AFY at this time. Commitment of the remaining supply is being considered by these and other water agencies, including the City.

2. This is also the maximum historic usage under the permit.

The CIty is expected to begin utilizing its surface water entitlement by 2015 when a water treatment plant is scheduled for completion, conveying a number of advantages. Use of Lake Nacimiento water confers water quality benefits to the City. Lake Nacimiento water is high quality relative to groundwater, with TDS concentrations in the range of 150 to 300 mg/L, while TDS concentrations in City wells average over 300 mg/L. Accordingly, use of Nacimiento water would provide better water quality to City customers. It will also improve wastewater quality as the softer water (less minerals and salts or TDS) will encourage elimination of household water softeners that introduce additional salts into the waste stream. This is important to the City because TDS concentrations of City wastewater effluent have occasionally exceeded the permitted maximum TDS of 1,100 mg/L, potentially impacting groundwater quality. The improvement in wastewater quality will also facilitate future use of recycled water by providing better water to recycled water customers.

In addition, Lake Nacimiento supply is independent of local groundwater supplies. Consequently, its development reduces the City's dependence on groundwater and thereby provides the City with increased water supply reliability. Use of Lake Nacimiento water will allow reduction of City groundwater basin pumping. The Paso Robles Groundwater Basin Management Plan has identified use of Nacimiento water in the Estrella and Atascadero subareas as a key objective to stabilizing groundwater levels.

4.1.3 RECYCLED WATER

The City currently discharges its treated wastewater to the Salinas River channel, recycling it to the groundwater basin. Recognizing wastewater as an important resource, the City is taking steps to improve its quality. These steps include upgrading of the wastewater treatment plant, use of Nacimiento water, and implementation of programs to reduce salt loading (e.g., from water softeners and industrial uses.) The City also is planning a recycled water program including recycled water irrigation, possible groundwater recharge, and discharge to the river. Wastewater and recycled water are further described in Section 4.4.

4.2 WATER SUPPLY FACILITIES

The City's water system is City-owned and operated. At this time, the City relies on two groundwater sources: *Basin Wells* that tap groundwater in the Paso Robles Groundwater Basin and *River Wells* that divert subterranean flows of the Salinas River. **Table 9** documents the amount of water produced from the Basin and River Wells from 2005 to 2010, while **Table 10** shows the projected well production to 2035. Total production also is shown in **Tables 9** and **10** and compared to the overall estimated perennial yield (97,700 AFY, Fugro, 2005). As indicated, the City's historical and projected production represents about 5 to 8 percent of the total supply (perennial yield) of the basin. General well locations are shown on **Figure 4**.

All wells are metered with either mechanical turbine meters or electro-magnetic meters. Meters are read in the field daily, entered into a daily log, and totaled by month and year. Meter readings are also

totaled daily by the City's SCADA system. Periodic production meter accuracy checks are made in the field and meters are calibrated or replaced when necessary.

The City neither imports water from nor exports water to any other agency. The City signed an agreement with San Luis Obispo County Flood Control District on August 17, 2004 to purchase water from the Nacimiento Water Project, which is projected to deliver 4,000 AFY of relatively high quality, untreated water. At time of writing, the City of Paso Robles is progressing with its plans for a water treatment plant to treat the Nacimiento supply. Startup of the plant is slated for 2015. When available, Nacimiento supply will allow reduced pumping from some of the City basin wells.

4.2.1 RIVER WELLS

As shown in **Table 9**, the river wells typically account for approximately half of the City's current supply. Seven active wells are completed along the Salinas River in the shallow underflow aquifer, and all of the wells are within the moveable point of diversion defined in Permit 5956. Four of these are in the Thunderbird well field (Wells 10, 13, 17, and 23- located in the southwest portion of the City) and two are in the Ronconi well field (Wells 1 and 4 - located several miles north of the Thunderbird well field). Ronconi 1 and 4 were brought back online in the summer of 2007 after many years of nonuse. Ronconi 16 is inactive due to casing failure and capped, with no piping and wellhead facilities, and will be properly abandoned in the near future. All wells are screened in the shallow aquifer with the exception of Thunderbird 10, which is also screened in the deeper basin aquifer. In addition, the City has historically reported the Borcherdt 5 well as an underflow well. This well is located between the Ronconi and Thunderbird well fields.

The City is considering additional wells near the river, probably in the south, and optimizing pumping. Future operation of the underflow wells will involve an optimum pumping plan that limits instantaneous flow rates to eight cfs while maximizing the permitted annual production of 4,600 AFY (see **Table 10**).

4.2.2 BASIN WELLS

Twelve wells are located east of the river and produce water from the Paso Robles Groundwater Basin. These are distributed throughout the service area. This distribution helps minimize localized impacts on groundwater levels and reduces the potential for any single event to disrupt production from more than four wells. The City's basin wells are Sherwood 9, Sherwood 11, Butterfield 12, Osborne 14, Dry Creek 18, Tarr 19, Royal Oak 20, Fox 21, Cuesta 22, Barney Schwartz 15, Avery 24, and Tower 25. The Sherwood 6 well has been inactive for many years because of detections of PCE and poor water quality (high sulfur content). There is potential for this well to be reactivated in the future.

As shown in **Table 9**, basin wells typically account for less than half of the City groundwater supply. With delivery of Nacimiento water, pumping of basin wells will be reduced significantly then will rise to meet increasing demand, to about 3,400 AFY (**see Table 10**).

4.2.3 NACIMIENTO WATER TREATMENT PLANT

The City is progressing with its plans for a water treatment plant (WTP) to treat surface water received from Lake Nacimiento. The WTP is being designed to treat 4 million gallons per day (mgd), with construction to begin in 2015. The WTP can be expanded to treat 6 mgd to meet future demands (Paso Robles website, October 13, 2010). Specific facilities include a water treatment plant, treated water reservoir and pump station, transmission pipeline, appurtenances and other site improvements (Padre, 2008). Half of the initial 4,000 AFY Nacimiento allocation and half of the 4 mgd Phase 1 treatment plant capacity are to replace lost well production capacity and improve water quality. The remaining capacity is to provide for new development. In order to limit reliance on the highly-stressed groundwater basin new development—per City policy—is required to be served with surface and recycled water. Therefore, the second 1,400 AFY Nacimiento allocation, the 2 mgd treatment plant expansion, and recycled water infrastructure will be funded by development.

4.3 WATER RATES

In April of 2010, the City adopted a uniform consumption-based rate where customers pay only for the water they use. Implementation of these rates has been held up due to a legal challenge. It is anticipated that new rates will be in place in January 2012.

In 2012, basic water service will be $2.50 for every 748 gallons used. This rate will increase annually to $4.40 for every 748 gallons used in 2016 (Paso Robles website, January 20, 2010).

4.4 WASTEWATER AND WATER RECYCLING

4.4.1 WASTEWATER COLLECTION, TREATMENT AND DISCHARGE

The City of Paso Robles owns and operates a secondary wastewater treatment plant (WWTP), located at the northern end of the City along the Salinas River. The WWTP treats wastewater from the City of Paso Robles, a portion of the Templeton Community Services District south of the City, and the California Youth Authority facility east of the City.

The plant, built in 1954 and upgraded or expanded in 1972, 1987, and 2002, provides secondary treatment. Primary treatment includes influent screening, aerated grit removal, and clarification/primary sedimentation. Secondary treatment includes biological treatment (two-stage trickling filters), secondary clarification, chlorine disinfection, and dechlorination. Treated effluent is discharged to a series of six polishing ponds with the overflow from the third and sixth ponds discharging to the Salinas River. Anaerobic sludge digestion is used to treat solids collected from the various liquid processes. The digested sludge is dewatered, hauled to sludge drying beds, and then taken to a City owned landfill (Black & Veatch, 2009).

The plant operates under National Pollutant Discharge Elimination System (NPDES) Permit No. CA0047953 and Waste Discharge Requirements (WDR) Order No. R3-2004-0031. A maximum discharge of 4.9 million gallons per day (mgd) is permitted. In 2010, the average daily flow was 2.94 mgd.

Table 11 documents past, current, and projected wastewater flows. In 2005, the plant treated 3,315 AF of wastewater. In 2010, slightly less wastewater was treated (3,297 AF) due to Level 2 City-wide mandatory outdoor water use restrictions. Wastewater flows per capita in 2005 and 2010 were 0.12 and 0.11 AF, respectively. Buildout (2025) wastewater flows are estimated to be 0.123 AF per capita, similar to 2005 wastewater flows. As shown in **Table 11**, wastewater flows are expected to increase to 5,410 AFY at 2025 buildout.

4.4.2 WASTEWATER QUALITY

The WDR order also regulates water quality, placing limits on specific contaminants in the wastewater effluent. The City's treated wastewater exceeds permit limits at times for TDS, chloride, sodium, cyanide, copper, selenium, bromodichloromethane, dichlorobromomethane and bis(2-ethylhexyl) phthalate.

The City's approach to these problems has included improvement of the quality of influent water. A significant improvement will be achieved with delivery of high quality Nacimiento Project water as a new City water supply, which thereby improves the quality of wastewater. The City has also initiated programs for voluntary and mandated reduced use of water softeners, and source control for industrial dischargers.

The City is also embarking on a comprehensive upgrade of the City's wastewater plant to an advanced secondary treatment process. While having served the community for 55 years, the existing wastewater treatment plant uses the same basic technology and is now incapable of satisfying modern effluent standards. The upgraded plant will produce effluent that meets discharge requirements, including standards for biochemical oxygen demand, total suspended solids, pH, and nutrient removal. Moreover, the plant is designed to have the ability to produce tertiary-treated recycled water with the simple addition of a filter and additional chlorine contact basin. Accordingly, the plant upgrade supports the City's water resource goals and objectives to implement future water recycling.

The City intends to finance the plant upgrade with a low interest loan from the State's Clean Water Revolving Fund Loan program. The upgrade, which will not increase the capacity of the plant, is anticipated to be complete in 2015.

In 2009, the City completed a Wastewater Treatment Plant Upgrade Facility Plan (Black & Veatch, July 2009. Early in the facility planning process, the City found that it could not afford to simultaneously upgrade the wastewater treatment plant and build the infrastructure necessary to produce and use recycled water. Accordingly, the Facility Plan evaluates alternatives to upgrade the wastewater treatment plant to an advanced secondary treatment process (biological treatment plus nutrient removal), to comply with the WDR in the near term, but also facilitate recycled water production in the future. The Facility Plan concludes that a Biological Nutrient Removal process is the most cost-effective

solution. The City recently completed plans and specifications to upgrade to a Biological Nutrient Removal process. The project is currently scheduled to go out to bid for construction in Fall 2012, after wastewater rates are adjusted and financing is in place. Construction of the project is dependent on the implementation of new wastewater rates needed to fund the project. Construction will require approximately 30 months.

4.4.3 SEWER RATES

Currently, the City bills monthly for combined residential water and sewer service. Sewer connection fees are $5,467 for single family residences (Paso Robles website, January 20, 2011). Although financed with a low-interest loan, payment of the loan debt for the plant upgrade will require revision of monthly sewer rates and connection fees. As of autumn 2010, the City is currently evaluating total wastewater management costs in order to determine new sewer rates.

4.4.4 WATER RECYCLING OPTIONS

The City's *Recycled Water Study Update* (Boyle, 2006) reviewed potential users of recycled water, laid out a conceptual conveyance system, examined potential sites for groundwater recharge, and assessed pumping and winter storage requirements.

The current quality of wastewater (with high TDS, sodium, and other constituents) has been recognized as an obstacle to water recycling. One of the key findings of the study was the need to reduce salt loading into the wastewater stream. This need is being addressed by the City's upcoming deliveries of high quality Nacimiento Project water, recent adoption of an updated source control ordinance, and implementation programs to manage industrial wastes and use of water softeners. The study also documented the considerable variation in seasonal water demand relative to wastewater flows; this indicates a substantial irrigation demand being served with potable water.

The study examined five recycled water alternatives:

- continued Salinas River discharge,
- enhancing wastewater treatment with Salinas River discharge,
- piping recycled water to customers along the Salinas River corridor,
- piping recycled water to customers along the Highway 46 corridor, and
- a combination of alternatives.

The study concluded that several alternatives are available, the most viable of which is a hybrid approach including recycled water irrigation of landscaping and vineyards, recharge along the Salinas River corridor, and seasonal discharge. The hybrid approach involves construction of a pipeline to deliver recycled water eastward along the Highway 46 corridor and then looping south around the City and back to the Salinas River channel, where potential percolation sites are located. Potential users have been identified, including golf courses, schools, parks, industries and vineyards. The study also provided recommendations including percolation testing, evaluation of the suitability of effluent quality for

irrigation, assessment of the potential reduction in salt loading from a source control program, and contacting potential recycled water users.

Subsequently, the City has developed an overall strategy for phasing of the recycled water program. Consistent with that strategy, the City is now developing a Recycled Water Master Plan and Financial Plan. This plan will provide a facility master plan and phased capital improvement program. It also will include evaluation of costs for a recycled water system and revenue needs. The financial plan will provide a spreadsheet model to allow evaluation of various connection fees and recycled water rates; this will likely include consideration of financial incentives to encourage use of recycled water. The Recycled Water Master Plan and Financial Plan will be completed in 2011.

As noted previously, the wastewater plant upgrade is designed to have the ability to produce tertiary-treated recycled water with the simple addition of a filter and additional chlorine contact basin. These Phase II improvements are tentatively scheduled for 2022.

Table 11 presents the total amount of wastewater collected in 2005 and 2010 and the projected amounts to 2035. It also shows the amounts projected to meet tertiary/recycled standards. No wastewater currently meets tertiary standards. However, by 2025, an estimated 650 AFY of tertiary treated recycled water will be used. Given that the City is in planning stages, the 650 AFY estimate includes direct use for irrigation at existing and new parks, schools, roadway landscaping, and other direct users.

The City of Paso Robles is the sole water, wastewater, groundwater and planning agency that operates within its service area. Nonetheless, the City is coordinating its recycled water planning efforts with San Luis Obispo County and the Central Coast RWQCB.

Table 12 summarizes non-recycled wastewater disposal volumes while **Table 13** projects future uses of recycled water between 2015 and 2035. Summation of the volumes in **Tables 12** and **13** equals the total wastewater collected and treated. **Table 14** summarizes the methods to encourage recycled water use.

The City of Paso Robles wastewater treatment plant upgrade will set the stage for future water recycling. This project includes upgrading of the plant to advanced secondary treatment, and design of an additional upgrade to tertiary treatment. In addition, the City will improve the WWTP influent wastewater quality through implementation of the Nacimiento water project and source control programs. The City is actively planning for the recycled water infrastructure and for financing, including consideration of financial incentives and potential ordinances to encourage use of recycled water. In 2011, the City will complete a Recycled Water Master Plan to evaluate implementation alternatives, cost, and related issues.

The City promotes its future water recycling through a variety of educational activities. For example, the City website provides outreach to the community at large, including:

- Updated information on the wastewater treatment plant upgrade, including FAQs (Frequently Asked Questions) that explain how the upgrade is a big step toward water recycling.

- Information on the availability of the *Recycled Water Study Update* online, at City Hall and at the library.
- Explanation of water softener issues and the negative impact on wastewater quality and recycled water.

The City also supports school education, offering a water conservation program for elementary school children, which includes a field trip to the wastewater treatment plant. In addition, the City recently cooperated with Cal Poly San Luis Obispo for a master's thesis (Miranda, 2010) investigating use of recycled water on landscape plants, including best plant selection, soil, and irrigation requirements. The City provided an experimental site at the wastewater treatment plant and irrigation water.

4.5 CURRENT AND PROJECTED WATER SUPPLIES

Paso Robles historically has obtained its entire water supply from Salinas River underflow and groundwater. **Figure 5** graphically shows annual water production between 1980 and 2010. Production increased to a peak in 2007, and then subsequently declined. The significantly lower production in 2009 and 2010 reflect the impact of Level 2 City-wide mandatory outdoor water use restrictions. **Figure 5** also shows population for comparison purposes; population has increased gradually, with a slowing of the growth rate over the past four years.

Table 15 summarizes current and planned water supply for the City of Paso Robles. As shown in the top portion of the table, water supply is projected to come from three sources: groundwater through the basin wells, underflow through the river wells, and Lake Nacimiento water. The table does not reflect the total groundwater supply (basin wells) available to the City, but the water that the City anticipates pumping to meet demands. The projected buildout demand, including non-revenue water, is 13,400 AFY. This demand may be reduced by potential water conservation efforts as shown in **Table 15**.

Future recycled water is grouped with water conservation as a means of reducing water use on a per capita basis to comply with Senate Bill 7, which requires Base Daily per Capita Water Use to be reduced 10 percent by 2015 and 20 percent by 2020 as discussed in Section 3.2.

Table 16 shows future water supply projects. By 2015, 4,000 AFY of Nacimiento water is projected to become available. By 2020, the City anticipates that another 1,400 AFY of Nacimiento water will be acquired for use. It is projected that by 2025, up to 650 AFY of recycled water will be used.

The City is a member of the California Urban Water Conservation Council (CUWCC) and, accordingly, is implementing demand management measures (DMMs, also known as best management practices (BMPs)).These DMMs are discussed in **Section 6**. In 2009, the City hired a Conservation Manager to plan and implement water conservation programs. **Table 15** shows total potential conservation savings from these implemented DMMs if all DMM programs described in **Section 6** are fully implemented. Conservation savings are estimated to increase from 364 AFY in 2015 to 1,617 AFY in 2025.

Potential conservation savings from price elasticity impacts of planned water rate increases are also shown on **Table 15** reflecting the additional conservation that may occur due to increased cost for

water. By 2025, the City anticipates that 650 AFY of recycled water will be used to offset potable supply. While not replacing City potable water deliveries, additional recycled water deliveries will be made to other facilities such as golf courses and irrigation, offsetting groundwater pumping.

If these conservation and recycled water savings are achieved, the City foresees meeting its 2015 and 2020 target water reductions and reducing total water demands by 980 AFY in 2015 and 3,885 AFY in 2025. These savings will most likely reduce Basin well pumping from those shown in **Table 15**.

There are no plans in the next 25 years for the City to use desalinated water, nor to export, transfer, exchange, or sell water other than water sales to City customers. Thus, these categories are not included in the summary tables.

4.5.1 RIVER WELLS (UNDERFLOW)

It is assumed that the City will be pumping the full appropriation of underflow water rights of 4,600 AFY. An exception to this might occur when Lake Nacimiento water first become available in 2016 (Note: for the purposes of this Urban Water Management Plan, Lake Nacimiento water is shown to be available beginning in 2015 rather than beginning in 2020). Efforts are underway to obtain a license for the permitted amounts. The combined capacity of the City's river wells is currently about 5,800 AFY, with a summer production capability of about 3,600 gpm. Because of the surface water treatment rule, groundwater from river wells that are within 150 feet of surface flow in the river require treatment prior to distribution. This includes Ronconi 1 and 4 and, on a seasonal basis, Thunderbird 10. A mobile microfiltration unit was leased in 2007 and 2008 for seasonal use of the Ronconi wells, and purchased in 2009. This treatment unit allows year-round operation of the Ronconi wells and beneficial use of about 800 gpm of the underflow allotment.

4.5.2 BASIN WELLS

In recent years, basin wells have provided as much as 4,100 AF (in 2007, see **Table 9**). As shown in **Table 15**, the City's basin groundwater use will be substantially decreased when Lake Nacimiento water becomes available in 2015. Based on recent groundwater studies, there is general agreement that total groundwater pumping (agricultural, municipal, rural, etc.) is approaching the perennial yield. Use by the City (and others in the basin) of Nacimiento Project water in lieu of basin groundwater will help to reduce the risk of overdraft and—all other pumping remaining stable—allow some recovery of groundwater levels in the Estrella subarea.

The combined design production capability of all twelve basin wells is about 8,150 gpm (13,150 AFY). However, production rates in several wells have been reduced in recent years due to regional water level declines. Use of Nacimiento water will result in short-term surplus production capacity among basin wells. This will provide backup capacity in times of water shortage or emergency, and offer the City the opportunity to site and install replacement basin wells.

4.5.3 NACIMIENTO WATER

The City has contracted for 4,000 AFY of Nacimiento water. The treatment plant construction is currently planned to begin in about three to four years. By 2020, an additional 1,400 AFY (for a total of 5,400 AFY) may be contracted. This additional water would allow the City to stabilize future basin well pumping at 3,400 AFY (approximately 2006 levels) or less, depending upon the effectiveness of long-term conservation programs.

5. WATER SUPPLY RELIABILITY AND WATER SHORTAGE CONTINGENCY PLANNING

5.1 RELIABILITY OF WATER SUPPLY

The California Urban Water Management Planning Act requires that each water supplier provide an assessment of the reliability of its water supply during normal, dry, and multiple dry years. This section considers the impact on water supplies of two types of drought, a single extreme drought year and a severe drought that is prolonged over at least three years. In addition, a catastrophic water shortage could also occur, for example, as a result of earthquake damage, regional power outage, or water quality emergency. This section presents the City of Paso Robles response to potential water shortages, including catastrophic water supply interruption and drought.

The *Water Source Evaluation* (Boyle, September 2006) includes evaluation of the ability of the City's wells to satisfy water demands during drought. This includes evaluation of historical rainfall periods to establish a standard drought for future planning, documentation of groundwater levels over time, evaluation of City wells in terms of drought performance, and recommendation of operational strategies to maximize groundwater production during drought.

As noted in the preceding sections (Section 4 Water Supply), the City overlies a large groundwater basin with storage amounting to 30.5 million AF (Fugro, August 2002). All of this water cannot be extracted reasonably, but the volume that can be used during drought is sizable. This is predicated on available well capacity to extract the water and also on replenishment of groundwater during wet years and stabilization of water levels over the long term. The key issue with regard to short-term shortages is not the absolute availability of supply. Instead, drought issues involve the available pumping capacity of wells and the impact on wells of water level declines during the shortages. For example, long-term regional water level declines amplified by drought affects could result in exposure of the well screens causing loss of pumping efficiency and/or loss of saturated thickness in the aquifer resulting in reduced well yield. In August 2007, localized groundwater level declines around City wells resulted in a 17 percent decline in well production relative to August 2006.

5.1.1 SINGLE-YEAR DROUGHT

Rainfall records for Paso Robles document an average annual precipitation of 14.77 inches (Station 046730). However, rainfall in Paso Robles is variable, having ranged since calendar year 1950 from 6.24 inches (1985) to 27.95 inches in 1995. In the past 60 years, six years have been marked by rainfall less than 50 percent of normal or 7.38 inches (1953, 1984, 1985, 1989, 1990, and 2007). As reported in past UWMPs, basic review of groundwater hydrographs for City wells suggested that one or even two consecutive extreme dry years did not have a discernable impact on groundwater levels in the City's Paso Robles Groundwater Basin wells. Hydrographs from the City's underflow wells along the Salinas River also showed little change in response to single-year droughts, probably reflecting recharge from the Salinas River that occurs even in drought years plus the available, albeit limited, groundwater storage in the alluvial aquifer along the river. Preliminary information provided by the *Water Source*

Evaluation (Boyle, September 2006) indicated that single year droughts did not significantly affect City well fields. Instead, droughts with durations of three, four, or five years appeared to be most problematic.

Water levels in the City's Paso Robles Groundwater Basin wells have been dropping consistently over the last 12 years due to regional water level declines in the basin. The impact of single year or multi-year droughts can amplify the effects of regional groundwater level declines, resulting in further lowering of well production levels. Single year droughts have not significantly affected the City's wells. However, droughts with durations of 3, 4, or 5 years are more problematic in terms of creating additional impacts on top of chronic water level declines in the basin (Boyle, September 2006).

In response to chronic and continuing water level declines and lowered water production capacity, the City has installed wellhead treatment systems to rehabilitate several wells. In addition, in June of 2009 the City adopted a Water Conservation and Water Shortage Contingency Plan (Ordinance No. 956 N.S.). This plan establishes mandatory and permanent water management measures necessary to promote efficient use of water and to prevent waste. The plan outlines a staged approach to dealing with supply shortfalls from 10 to 50 percent (see Appendix C for the plan). In June of 2009, the City initiated mandatory Level 2 outdoor water use restrictions during the summer months. These restrictions, which are anticipated to remain in effect until additional water supplies are developed, have been successful in reducing peak demand and enabling the City to maintain reservoir storage levels for emergency and reserve uses.

In the long term, peaking problems will be alleviated through water conservation, development of Nacimiento water supply, and provision of recycled water for landscape irrigation, which effectively reduces demands on the potable water system.

5.1.2 MULTI-YEAR DROUGHT

The seven-year period of calendar year 1984 through 1990 was marked in Paso Robles by below-average rainfall, averaging 9.4 inches overall (64 percent of normal). The most severe portion of this drought extended over three years (1988-1990), when rainfall averaged less than 8 inches, or just below 54 percent of normal. Accordingly, three or more consecutive years with an annual average rainfall of 60 percent or less is a reasonable approximation of a severe, multi-year drought. The City's preliminary *Water Source Evaluation* (Boyle, September 2006) standard drought period generally coincides, and is defined as the five rainfall years (starting July 1) from 1987 through 1991.

During the seven-year drought, the underflow wells along the Salinas River showed declines in groundwater levels. Thunderbird 10 showed a decline between 1984 and 1990 of about six feet, with a subsequent recovery. Two Paso Robles Groundwater Basin wells monitored through this period, Sherwood 9 and 11, showed a decline in groundwater levels that started in 1985 (the second year of the drought) and persisted to 1994, indicating a lag effect between the occurrence of rainfall and water level changes. Overall, declines in the two wells amounted to 68 feet in Sherwood 9 and 74 feet in

Sherwood 11. Subsequently, water levels rose between 1995 and 1998 but since have declined to below 1994 levels in these two wells.

Preliminary conclusions of the *Water Source Evaluation* (Boyle, September 2006) were that the City had the capability to withstand a drought like that of the rainfall years 1987-1991. However, there is little margin for operational problems or for significant growth in water demand without new water supply sources. Recent experience has shown that if key wells are off-line, as occurred in the summer of 2007, and/or production rates are reduced due to sustained regional water level declines in the Paso Robles Basin (as has occurred), the City will not be able to supply peak summer demands without aggressive demand management (conservation) until supplemental water supplies are developed.

5.1.3 WATER SUPPLY RELIABILITY IN NORMAL AND DROUGHT YEARS

The Urban Water Management Planning Act requires tabulation of available water supply volumes in normal (average), single dry, and multiple dry years. The City of Paso Robles has relied on underflow and groundwater resources to satisfy growing water demands in recent years that have included both extreme dry years (including 2007) and prolonged severe drought extending over seven years (1984-1990). However, the City has regularly experienced summer water supply shortages and in 2007, was able to meet customer demands only by reducing City demands and evoking voluntary conservation. In 2009, the City adopted a revised Water Conservation and Water Shortage Contingency Plan. Level 2 City-wide mandatory outdoor water use restrictions were initiated in 2009 and continue to time of writing. These shortages are not related to the absolute availability of supply but to lowered groundwater levels (that have reduced production rates), customer irrigation patterns, and the limitations of the City's facilities.

Table 17 lists the year(s) used in this Plan to represent normal, single-year drought and multi-year droughts. Accordingly, **Table 18**, Supply Reliability-Historic Conditions, lists the City's water production as of 2006 (7,431 AF) as the known reliable supply in normal years and in drought. As indicated in **Table 17** (also see **Figure 2**), 2006 was considered an average precipitation year, 2007 was a representative single-dry year, and 1987 through 1990 were multiple dry years as discussed above. While 2009 also had average precipitation, it was preceded by two years of drought and water production was reduced in response to the mandatory Level 2 outdoor water use restrictions.

On an annual basis, the City was able to provide 7,431 AF of supply during normal and drought times. Production in 2007 was higher at 8,126 AF. As required, the percentage of normal is also shown in **Table 18**. Since historical annual pumping has not been greatly affected by drought, the percentage is considered 100 percent of normal. However, there is potential for summer peaking problems as indicated in the bottom row of **Table 18**. **Table 19** is similar to **Table 18** and shows the minimum water supply available during the next three years (2011-2013) based on the driest three-year historic sequence.

Future supplies will be even more resilient to droughts by 2015 when Lake Nacimiento water is projected to be available. Lake Nacimiento water is a reliable and stable source of water as San Luis

Obispo County has a contractual first priority to 17,500 AFY of the reservoir yield which is over 200,000 AFY. Modeling of Nacimiento Lake levels and Nacimiento Water Project (NWP) deliveries indicates that NWP deliveries are not a significant contributor to lake level changes as compared to historic records and, that even during drought periods, the total annual San Luis Obispo County entitlement could have been delivered (Boyle, October 2002). In addition, future use of recycled water—a nearly constant source—will also increase supply reliability. Future water supply projects are summarized in **Table 16**.

Table 20 compares water supply to water demand in five year increments between 2015 and 2035 for a normal year. The supply will be the same as demand without potential additional conservation (**Table 15**). As specified in the UWMP Guidebook, the demand totals incorporate the projected water reduction targets of 10 percent per capita reduction by 2015 and 20 percent reduction by 2020. If these target reduction goals are met, the City will scale back groundwater basin pumping. However, it is difficult to guarantee that these target reductions can be met considering the lack of funding and competing fiscal responsibilities that cities are facing today. Therefore, the supply surplus is not likely to be as great as projected in **Tables 20** through **22**.

Table 21 presents the same estimates for a single dry year. The supply will be the same as that available during normal years (**Table 15**); groundwater can be pumped at similar rates on an annual basis during dry years and Lake Nacimiento water and recycled water will still be available. Demands include the optimistic additional conservation and recycled water savings to meet the 2010 and 2020 water reduction targets. If these target water use reductions are met, no additional demand reductions will be needed during a single-year drought.

A table was generated to compare annual supply and demand during multiple-dry year periods for five-year periods between 2015 and 2035. This information is presented in **Table 22**. In this table, supply values were kept the same as those for normal years (**Table 15**). Demand values were assumed to also be the same as those in **Tables 20** and **21**, where additional potential conservation and recycled water savings are included as called for in the UWMP Guidebook. If target water use reductions are met, the City will have sufficient supply to provide water in multi-year droughts. If target water use reductions are not met, the City can initiate various levels of its Water Shortage Contingency Plan to reduce water demands, as discussed in a **Section 5.3**.

The City of Paso Robles water system provides some built-in reliability. First, the water system uses two groundwater sources, Salinas River underflow and the groundwater basin, with differing recharge characteristics. Second, City wells are dispersed throughout the service area protecting against a single catastrophe (such as a groundwater contamination release), and thus disruption of more than four wells is unlikely. The West and East Zones of the City water system are linked so that water can be conveyed from one zone to another if needed in emergency.

Two additional sources of water will be available in the future: Nacimiento Project water and recycled water. Lake Nacimiento surface water supply, which is independent of local groundwater supply, will provide the City with increased water supply reliability, enhanced delivered water quality, and improved wastewater quality. Use of recycled water by the City for non-potable irrigation and industrial use will

release potable groundwater for higher beneficial uses. Recycled water has advantages of being very reliable, especially in drought. Use of recycled water for landscape irrigation provides substantial benefits in reducing peak summer demands on the potable water system.

Even with Nacimiento Project supply and recycled water, the City will continue to rely on the groundwater basin for a portion of its supply. At current rates of municipal and agricultural pumping, groundwater in the Estrella subarea already is subject to chronic declines. These declines are accompanied by loss of well yield, increased pumping lifts, deterioration of water quality, and potential damage to wells.

This risk, which undercuts water supply reliability, is being addressed directly by the City through its active engagement in basin-wide monitoring and management of the basin. In addition, the long-term reliability of water supply can be increased through water conservation that allows already-developed water supplies to be used effectively. The next section of the Plan discusses specific factors affecting the reliability of the City's water supplies. Water conservation, an integral part of the City's water resource planning, is discussed in a subsequent section.

5.2 FACTORS IN WATER SUPPLY RELIABILITY

Table 23 lists potential legal, environmental, water quality, and climatic factors that could result in inconsistency of supply and shortages. Each is discussed below.

5.2.1 LEGAL

The City is addressing potential legal limits on its underflow and groundwater supplies, which include loss or reduction of Salinas River underflow water rights and adjudication of the Paso Robles Groundwater Basin. The City is actively pursuing perfection of underflow water rights (see pages 17 and 18 for discussion of actions the City is taking in this regard). With regard to the Paso Robles Groundwater Basin, the City is an active party to the Paso Robles Groundwater Basin Agreement with the San Luis Obispo County Flood Control and Water Conservation District (District) and private landowners with properties overlying the Paso Robles Groundwater Basin. The agreement acknowledges that the Basin is not in overdraft now, and establishes a process for monitoring its condition in the future. It contains provisions reserving all the parties' respective legal rights. The agreement sets the stage for the City and District to be stewards of groundwater in the North County, and supports monitoring of the basin and consideration of means to avoid overdraft. The City also is an active participant in the Groundwater Basin Management Plan, currently being prepared through collaboration among various agencies, interest groups, and agricultural and domestic groundwater pumpers. In addition, the City has developed policies that regulate non-City wells within City limits and thereby protect City wells and pumping. These policies include provisions to require that private wells are maintained and operated in a manner to prevent cross-connection with the City water system, protect the groundwater basin, support expanded monitoring, and require that unused wells are abandoned correctly to prevent migration of surface contaminants to groundwater.

The City is making strides toward improved wastewater quality through delivery of high quality Nacimiento Project water, programs for reduced use of water softeners, source control for industrial dischargers, and upgrade of the City's wastewater plant.

5.2.3 ENVIRONMENTAL

The most likely environmental factors affecting City water supply would derive from substantially increased pumping from other groundwater basin users resulting in basin overdraft. The City is actively participating in the Paso Robles Groundwater Basin Agreement and the Paso Robles Groundwater Basin Management Plan process with the goal of stabilizing chronic groundwater level declines and avoiding overdraft. Use of Nacimiento water after 2015 by Paso Robles and other local communities will reduce dependence on groundwater.

Earthquakes also can be considered an environmental event that could affect supply consistency in the short term as repairs are made to potentially damaged facilities (e.g., storage tanks, pipelines, wells). See the following section on *Catastrophic Water Shortage*. Heat waves have resulted in power outages in Paso Robles that disrupt water supply; see the section on *Catastrophic Water Shortage*.

5.2.4 WATER QUALITY

Potential water quality impacts on water supply reliability are addressed in **Table 23** and **Table 24**. As indicated in **Table 24**, it is not anticipated that the quality of groundwater, Lake Nacimiento water, or recycled water will degrade in such a manner that affects the volume of water available for use. Lake Nacimiento water will improve the quality of the City's water supply with respect to lowering the total dissolved solids (TDS) content of the supply (see Section 4.1.2 for discussion). However, water quality issues include the potential for contamination plumes and long-term regional impacts.

While all but one of the Salinas River underflow wells are clustered in two well fields, the remaining City wells are distributed widely. Accordingly, the response to contamination of a well field or one or more wells would be cessation of pumping in the affected wells and greater temporary reliance on the remaining wells (as well as future Lake Nacimiento and recycled water supply). Wellhead treatment system installation is also an alternative that could be implemented in response to a specific water quality issue. Currently, the Ronconi Well Field has a microfiltration wellhead treatment system and Sherwood 9 and Sherwood 11 wells have treatment systems to remove arsenic and hydrogen sulfide.

The likelihood of contamination of City wells is reduced through preparation of a Drinking Water Source Assessment and Protection Program (DWSAP), a federally-mandated program being coordinated by the California State Department of Health Services. The City prepared DWSAs for 14 wells in 2002: Sherwood 9, Sherwood 11, Butterfield 12, Osborne 14, Dry Creek 18, Tarr 19, Royal Oak 20, Fox 21, Cuesta 22, Borcherdt 5, and the Thunderbird wells 10, 13, 17, and 23. DWSAs were prepared for the Avery 24 well in 2003 and for the Ronconi wells 1 and 4, the Tower 25 well, and the Barney Schwartz 15 well in 2006 (Paso Robles, 2002, 2003 and 2006). Ronconi 16 is capped and will be properly abandoned in the future. For each well, the DWSAs:

- Delineated source protection areas for both surface water and groundwater;
- Identified all potential sources of significant contamination in source protection areas; and
- Determined the susceptibility of water sources to contamination within protection areas.

The 19 assessments found water supply sources vulnerable to agricultural drainage, auto repair shops, gas stations, home manufacturing, low-density septic systems, sewer collections systems, dry cleaners, metal plating/finishing/fabricating, animal operations, agriculture and irrigations wells, and plastic and synthetics producers.

The City's Water Shortage Contingency Plan discussed in a subsequent section can be used if unforeseen water supply interruptions occur due to water quality problems. Water supply wells are dispersed throughout the City and it is unlikely that more than one cluster of wells would be impacted. As mentioned before, use of Nacimiento water after 2015 and recycled water after 2025 will increase the City's water supply reliability by reducing dependence on groundwater.

With regard to regional groundwater quality, the Estrella subarea of the Paso Robles Groundwater Basin, which includes most of the City, is characterized locally by increasing TDS, chloride and nitrate concentrations. These adverse water quality trends are unlikely to affect City water supply in the near future, given that groundwater currently provided by the City meets all drinking water standards and the increases in TDS, chloride and nitrate are localized. Nonetheless, salt loading to the groundwater basin is an important long-term concern. Recognizing that City wastewater disposal is one source of salt loading, the City has made the reduction of salt loading one of their water resource goals. Major means to reduce salt in City wastewater include planned use of high-quality Lake Nacimiento supply, reduced use of home water softeners, strategic use of wells with lower salt concentrations, and implementation of the industrial waste discharge ordinance.

5.2.5 CLIMATIC

The climatic events most likely to affect water supply are droughts, which are addressed in other sections of this report by examining historical droughts and considering their impact on current and future water supply and demand. However, future climate change—and specifically global warming—brings additional uncertainty to water supply management. It is notable that five of the six extreme drought years have occurred within the past 26 years, suggesting greater climatic variability in recent decades.

Paso Robles does not have surface water supplies dependent on snowmelt, which is likely to be affected by global warming. Effects of global warming on local rainfall remain highly uncertain; however, it is likely that continued global warming would increase evapotranspiration losses. In other words, water demand for irrigation would increase as well as evaporation of Lake Nacimiento water. At this time, the significance of such an effect is not known but warrants continued consideration, particularly given the high summer season water demand that already has stressed the City water system capacity. Effects on the water system of increased irrigation demand can be minimized through water conservation measures and provision of recycled water.

5.2.6 CATASTROPHIC WATER SHORTAGE

The Urban Water Management Planning Act requires that water purveyors describe actions to be taken in the event of catastrophic water supply interruption, such as earthquake and regional power outage. Regional power outages represent a potential interruption in water supply. The City has backup generators at some but not all City wells. In the past, the City has rented additional generators during power failures.

In Paso Robles, catastrophic interruption of water supply is most likely to occur due to an earthquake, which has potential to damage wells, piping, and reservoirs. The December 22, 2003 earthquake seriously damaged two reservoirs. In response, a City-wide water shortage emergency was declared and a temporary water shortage contingency plan was adopted with the purpose of reducing the City's water demand by 25 percent. A final Water Conservation and Water Shortage Contingency Plan was adopted in 2009. This water shortage contingency plan is discussed in the next section.

5.3 WATER SHORTAGE CONTINGENCY PLANNING

The City adopted a Water Conservation and Water Shortage Contingency Plan on June 2, 2009 (Ordinance No. 956 N.S.). This plan, provided in **Appendix C**, recognizes that the City, although having two dependable sources of groundwater, requires a program to manage the City's water demand and supply to minimize the effects of water shortages. This plan provides for adequate water supplies during the summer months and into the future, maintaining a reliable minimum supply of water for public health, safety, and welfare.

The Water Shortage Contingency Plan establishes mandatory and permanent water management requirements necessary to conserve water, enable effective water supply planning, provides for reasonable and beneficial use of water, and prevent waste, unreasonable use, and unreasonable methods of use of water. Four levels of actions are defined to be implemented in times of shortage with increasing restrictions on water use in response to greater demand minus supply differences. Level 1 is voluntary while Levels 2 through 4 are mandatory and violators are subject to civil, and administrative penalties and remedies. The City Council or City Manager will recommend and declare the appropriate water shortage condition. **Table 25** shows the levels and requested rationing/conservation.

The City's actual response to a water shortage will require specific action by the City Council. Stages of action for many water agencies are defined by available storage in a surface water reservoir or by the annual allotment provided by a water wholesaler. In contrast, Paso Robles overlies vast groundwater storage that can be utilized by the City for its drought supply. However, the City currently experiences seasonal shortfalls related to summer peaking of water use.

The City response to drought will depend on the magnitude of the shortfall. **Table 25** presents water supply shortage stages that would trigger conservation measures. Once a water shortage stage has been declared, measures will need to be implemented to meet water conservation goals. **Table 26** provides a brief summary of actions in response to various water shortage emergencies other than drought. **Table**

27 provides examples of consumption reduction measures, ranging from public education to mandatory rationing and restrictions for only priority uses. Specific recommended measures include:

- Notify all customers of the water shortage,
- Mail or deliver information to all customers explaining the importance of water conservation,
- Provide technical information to customers on means to promote water use efficiency,
- Develop a media campaign to promote water conservation, and
- Develop or expand existing conservation programs such as low-flow toilet rebates.

Level 1 consumption reduction measures are voluntary and request water users to reduce use by 10 percent in response to a reasonable probability that there will be a supply shortage (either peak or longer-term) where a savings of 10 percent of supply is needed to meet demands. Public education and awareness measures will increase to notify water users. Water conservation measures include restrictions on irrigation, repair and prevention of leaks, and use of recycled, non-potable, or non-City water for construction.

A Level 2 Condition will be declared when there is a reasonable probability that there will be a supply shortage requiring consumers to reduce use by 20 percent to provide for sufficient supplies. All Level 1 Condition measures are required as well as additional irrigation restrictions. The City may also not allow any additional water connections and/or implement a water allocation per customer account with per unit penalty surcharges for use exceeding the water allocation.

During a Level 3 Condition there is a reasonable probability that there will be a supply shortage requiring consumers to reduce use by 30 percent to provide for sufficient supplies. All Level 1 and Level 2 Condition measures are required as well as further irrigation restrictions. Filling of ornamental lakes and ponds is prohibited. All leaks, breaks, and other plumbing malfunctions must be repaired upon discovery or within 48 hours of notification by the City. Washing down of vehicles and paved areas is prohibited. New water services will only be allowed under certain circumstances and all annexations will be suspended.

A Level 4 Condition will be declared when there is a reasonable probability that there will be a supply shortage requiring consumers to reduce use by 50 percent to provide for sufficient supplies. All Levels 1, 2 and 3 Condition measures are mandatory. Landscape irrigation is prohibited. Leaks, breaks, and other plumbing malfunctions must be repaired upon discovery or within 24 hours of City notification. Filling or refilling of residential pools and spas is prohibited. The City will not enter into any new agreements to provide water to new customers.

Prohibitions are listed in **Table 28** and **Table 29** provides examples of penalties and charges for excessive water use. Violators would be issued two warnings before being fined. A fine not exceeding one hundred dollars would be assessed for a first violation. A second violation within a year would result in a fine not exceeding two hundred dollars. If a third violation occurs within the same year, a fine not exceeding five hundred dollars would be assessed.

Successful implementation of water conservation measures results in a decrease in water demand, with the unintended effect of reducing a water purveyor's revenues. Accordingly, the water code requires analysis of fiscal impacts of the water shortage contingency plan on revenues and expenditures and discussion of measures to reduce impacts. For Paso Robles, effective implementation of the water shortage contingency plan would result in a decline in potable water sales of as much as 10 to 20 percent on an annual basis. This reduction is illustrated in **Table 30** which is based on a 10 to 20 percent decline in 2004 water revenue. Expenditures are not projected to increase during water shortage emergencies (**Table 31**) because water supply sources will remain basically the same and, while City staff may focus on shortage-related duties, no hiring of additional temporary staff or extensive overtime work is anticipated. Any additional effort by the City, such as advertising and public education, would be conducted by the City's conservation program staff.

Any revenues derived from penalties for excessive water use or water wasting during the water shortage would not effectively offset lost revenues. These presumably limited revenues should be applied toward administration of the water shortage contingency plan.

Declining water demands would be offset to a small degree by a decline in operating expenses related to the amount of water provided, such as pumping (energy) and water treatment costs. Measures to overcome revenue impacts are listed in **Table 32**. The City anticipates that reserves would be used to offset the revenue impact. If the water shortage emergency is or appears to be long-term or if City reserves are low, the City may elect to initiate rate adjustments to offset these losses.

The effectiveness of the Water Shortage Contingency Plan can be measured with the monitoring mechanisms listed in **Table 33**. Weekly monitoring of groundwater production and water distribution (as Nacimiento water and recycled water enter the system) as well as wastewater flow to the treatment plant will occur. These values will be compared to water use and wastewater generation during normal periods and will indicate the level of water conservation. Increased meter readings on a weekly basis will indicate the level of water conservation occurring on a single user basis. These increased meter readings can be on a random basis and also can identify high water users and those customers who are not conserving. This monitoring will also alert the City as to the amount of lost revenue to expect.

The Urban Water Management Planning Act requires a mechanism for determining if reductions in water use are actually being achieved in response to conservation measures. Regular monitoring during a Stage 1, 2, 3 or 4 shortage would include reporting of daily production figures and comparisons of weekly production to the target weekly production to verify that the reduction goal is being met. If reduction goals are not met, the City Manager will notify the City Council and provide them with a Staff Report containing recommended corrective action alternatives for their consideration.

6. DEMAND MANAGEMENT MEASURES

6.1 INTRODUCTION

The California Urban Water Management Planning Act requires that each water supplier provide a report describing its implementation of fourteen demand management measures (DMMs, also known as best management practices (BMPs). This report describes the current status of implementation and the planned implementation of these measures in the future. The descriptions of the programs and measures are organized to correspond to the recent grouping of measures by the California Urban Water Conservation Council (CUWCC). These grouping are:

1) Utility Operations Programs
   - 1.1 Conservation coordinator (formerly BMP 12)
   - 1.2 Water waste prevention (formerly BMP 13) - Programs that focus on existing users, new development, and water shortage measures
   - 1.3 Wholesale agency assistance programs (formerly BMP 10)
   - 1.4 Water loss control (formerly BMP 3)
   - 1.5 Metering with commodity rates (formerly BMP 4)
   - 1.6 Retail conservation pricing (formerly BMP 11)
2) Education Programs
   - 2.1 Public information programs (formerly BMP 7)
   - 2.2 School education programs (formerly BMP 8)
3) Residential Measures
   - 3.1 Residential assistance program (formerly BMPs 1 & 2)
   - 3.2 Landscape water survey (formerly BMP 1)
   - 3.3 High efficiency clothes washer (HECWs) (formerly BMP 6)
   - 3.4 Water sense specification toilets (formerly BMP 14)
   - 3.5 Water sense specifications for residential development
4) Commercial, Industrial, and Institutional (formerly BMP 9) – The goal of these programs is to achieve a 10 percent reduction from baseline water usage at CII accounts (focused on interior and process-related water usage).
5) Landscape (formerly BMP 5) - These programs apply to accounts with dedicated irrigation meters or commercial landscapes served by mixed meters.

The programs outlined in this section build on the conservation programs previously implemented by the City of Paso Robles and the plans detailed in the 2000 and 2005 updates of the Urban Water Management Plan. In April of 2009, the City established a full-time Conservation Manager position to plan and implement water conservation programs. Since then, significant progress on implementation of programs in several DMM areas has been achieved. In addition, the City signed the CUWCC Memorandum of Understanding and was accepted as a member in June, 2010.

This section provides a description of how the City is addressing water conservation programs in each of the DMM areas. The current status of the implementation of each program is described. **Table 34**

summarizes the schedule for these DMMs and indicates if progress has been made since the 2005 UWMP. Further detail on each DMM, including projected annual water savings (benefits) and program costs, is provided in **Appendix B** (Implementation Plan for Water Conservation Best Management Practices).

City of Paso Robles Compliance with CUWCC Memorandum of Understanding

The City of Paso Robles plans to use the gallons per capita per day (GPCD) compliance option method for compliance with the Memorandum of Understanding (MOU). This method states that the following reductions must be attained from the City's baseline water use of 241 GPCD (see **Table 8**):

2011: 96.4 percent of baseline (or 100 percent after weather normalization)
2013: 92.8 percent of baseline (or 96.4 percent after weather normalization)
2015: 89.2 percent of baseline (or 92.8 percent after weather normalization)
2017: 85.6 percent of baseline (or 89.2 percent after weather normalization)
2019: 82.0 percent of baseline

For 2010, the last year of complete water use records, the City of Paso Robles' total GPCD water use was 188 gpcd (based on total use of 6,326 AF and a population of 30,072). This water use is 78 percent of baseline water use, demonstrating compliance with the MOU. The City has filed the interactive BMP report forms with CUWCC (found in Appendix F).

Impact of 2009 Level 2 Water Shortage Conservation Program – The City of Paso Robles currently faces a 20 percent water supply shortfall during the summer months due to high irrigation water demands and reduced well capacity, reflecting groundwater level declines in the Atascadero and Estrella subareas. To address this shortfall, in April 2009, the City implemented mandatory outdoor water use restrictions that limit watering to three days per week on a specified schedule. A comprehensive public outreach program was also launched to educate customers on the need to conserve water and use efficient irrigation techniques. As a result, peak-summer water demands were reduced by up to 20 percent compared to 2007/08 water use. Total water demand for 2009 was reduced by 16 percent from 2008 levels. Mandatory water use restrictions were continued in 2010, and will be continued until additional water production capabilities are developed.

6.2 UTILITY OPERATIONS PROGRAMS

6.2.1 CONSERVATION COORDINATOR

This requirement has been met through the staffing in 2009 of a full-time Conservation Manager position in charge of planning and implementation of the City's conservation programs.

6.2.2 WATER WASTE PREVENTION (FORMERLY BMP 13)

In fulfillment of this DMM, in 2009 the City enacted Ordinance No. 09-962- N.S., the Water Conservation and Water Shortage Contingency Plan. This plan outlines permanent water waste prohibitions that are

in effect at all times for existing customers, and additional water use restrictions that are implemented in four stages according to increasing levels of water supply shortfalls. This ordinance is described in the previous section and provided in **Appendix C**. In addition, in 2009 the City adopted a water efficient landscape ordinance in response to the requirements of AB 1881. This ordinance (**Appendix D**) applies primarily to landscape water use efficiency in new development. In addition to including most of the state's model water efficient landscape ordinance requirements for efficient irrigation system design, the ordinance limits turf landscaping in new developments as follows:

- Single Family Residential front yard landscape limited to 25 percent of landscaped area
- Multi-family residential development limited to 20 percent of the landscaped area
- Commercial development limited to 10 percent of the landscaped area.

6.2.3 WHOLESALE AGENCY PROGRAMS

Currently the City does not provide water on a wholesale basis. Therefore, this DMM does not apply.

6.2.4 WATER LOSS CONTROL (FORMERLY BMP 3)

This DMM focuses on minimizing lost and unaccounted-for water (non-revenue water) through system leak detection and repair, and through comprehensive audits of the water production and water distribution system. New procedures for conducting a system water audit have been developed by the American Water Works Association. To comply with this DMM, utilities are expected to use this methodology. To date, the City has not completed a water audit using the methodology. However, the City does track overall unaccounted-for water percentage on an annual basis. Unaccounted-for water is the difference between known billed and unbilled consumption and water production. It includes actual losses (leaks) in the distribution system, un-metered use (e.g. hydrant flushing and fire-fighting), unauthorized water use (theft) and meter error. Unaccounted-for water use among utilities in California generally ranges from 6 percent to 15 percent and averages about 10 percent.

In recent years, since major improvements to the City's billing and accounting system were made, the unaccounted-for water percentage has been as follows:

2006 - 7.3 percent
2007 - 6.6 percent
2008 - 7.2 percent
2009 - 8.5 percent
2010 - 9.1 percent
5-year Average = 7.7 percent

This unaccounted-for percentage is relatively low by California water utility and industry standards (California DWR, August 1994). Therefore, in relation to the implementation of other DMMs, completing a comprehensive water audit using AWWA component analysis method will be given a lesser priority. The CUWCC does allow cities up to four years to develop a validated data set for all entries of their water audit and balance. The City will continue to monitor the unaccounted-for percentage and begin to

develop the data required to complete this audit. In 2010, the accuracy of the City's well production meters were tested, and several meters were calibrated and/or replaced. In addition, a prioritized list was developed of older residential customer meters identified for replacement.

On-going programs to reduce unaccounted-for water include a replacement program for customer meters based on billing record analysis. Currently customer meters are replaced when billing data discrepancies indicate either a zero read or an extremely slow meter. An additional component of this DMM that is planned for implementation in 2011-12 is development of a formalized testing, repair, and replacement program for customer meters. The CUWCC Memorandum of Understanding (MOU) states that this plan is to be submitted to CUWCC within one year of signing the MOU.

6.2.5 METERING WITH COMMODITY RATES (FORMERLY BMP 4)

This measure has two components: 1) metering of all new connections and existing connections, and 2) implementation of commodity water rates whereby monthly charges are based on the volume of usage. This demand management measure, fundamental to efficient use of water, has been in place in Paso Robles for many years. Currently, water billing data can be tracked for the following user categories: single family residential, multi-family residential, commercial/industrial, large landscape irrigation, and institutional/governmental customers. Currently, water is billed at a rate of $1.32 per 100 cubic feet. In addition, an $18/month base fee is charged to all customers. New water rates were adopted in 2010 that will discontinue the $18/month base fee in 2011 and increase the commodity charge over the next five years as follows: 2012 - $2.50, 2013 - $3.20, 2014 - $3.70, 2015 - $4.10, 2016 - $4.40. Implementation of this rate is currently scheduled for 2012, pending re-noticing of customers of the rate increase per Proposition 218 requirements.

6.2.6 RETAIL CONSERVATION PRICING (FORMERLY BMP 11)

Conservation pricing provides a price signal to customers to use water efficiently. Compliance with this DMM requires that a minimum of 70 percent of the City's total water sales revenue be derived from volumetric charges as opposed to fixed monthly charges. The City is currently meeting this target, as the current water rate structure collects approximately 65-70 percent of revenue from volumetric charges. The proposed water rates for the 2012-2016 period (adopted by the City Council in 2010) will eliminate all fixed monthly charges and all revenue will be derived from volumetric charges.

6.3 EDUCATION PROGRAMS

6.3.1 PUBLIC INFORMATION PROGRAMS (FORMERLY BMP 7)

One of the cornerstones of an effective water demand management program is effective public outreach and education. Public information and outreach—which convey the need for efficient water use and show how customers can reduce water use—supports all other elements of the program.

The CUWCC MOU requires that a program include, at a minimum, the following outreach activities. Paso Robles is currently engaged in the following activities:

- At least quarterly contacts with the public
- Contacts with the media at least four times per year
- An actively maintained website
- An annual budget for the public outreach program

The City has had an active public information program for several years and has increased outreach activities since filling the water conservation manager position. The following communication tools are used to convey water conservation messages and to advertise other program elements to customers:

- Monthly radio advertising
- Bill inserts (3-4 newsletters, flyers per year)
- Bill messaging
- Water conservation brochures made available at the City library, at booths at local fairs, and via mail to customers upon request.
- Workshops on Waterwise landscaping and conversion of turf to low-water landscape (2-3 per year)
- Landscape watering schedule made available on website and refrigerator magnet
- Customer notification when runoff or water waste is reported
- Water bill information showing monthly use compared to historical use
- Development of conservation program "branding"
- Speakers bureau – conservation and resources staff are available upon request to speak with community groups.

6.3.2 SCHOOL EDUCATION PROGRAMS (FORMERLY BMP 8)

This DMM covers classroom presentations promoting efficient water use and supplementation of presentations with grade level-appropriate education materials. The City has an ongoing program, working through a local consultant specializing in presentations to grades 4 through 6. The consultant coordinates with the Paso Robles school district and markets the program directly to teachers throughout the district. The 45-minute interactive presentation titled "The Story of Your Water," teaches students about the water cycle, water treatment, water conservation in the home and yard, and water reclamation. These presentations meet state education framework standards and are age-appropriate. In 2008/2009, 26 classroom presentations were made.

The City also provides age-appropriate water education material to children at approximately 2 to 3 community fairs each year (conservation coloring books, workbooks, and other promotional items).

6.4 RESIDENTIAL PROGRAMS

6.4.1 RESIDENTIAL ASSISTANCE PROGRAM

This DMM involves providing leak detection assistance to customers. This may include, but is not limited to, a water conservation survey, water efficiency suggestions and/or inspection, and provision of showerheads and faucet aerators that meet current WaterSense specifications. Beginning in March 2010, the City began offering residential water surveys free of charge to customers requesting the service. The program is marketed through advertising in bill inserts, bill messages, website, and newsletters. During the water survey, Paso Robles' water conservation staff performs the following:

- Check shower heads and faucets and install low-flow models if needed, and the customer desires
- Check toilets for leaks and install a new toilet flapper valve if leaking
- Inspect all irrigation stations for leaks, overspray, and other problems
- Create a seasonal irrigation schedule for the home
- Provide a checklist of improvements for the irrigation system
- Provide other conservation tips and brochures.

Surveys take between 60 and 90 minutes. The form used in the survey is shown in **Appendix E**. The CUWCC MOU coverage requirement for this DMM is to provide surveys to an average of 1.5 percent per year of single family and multi-family accounts. In Paso Robles, this amounts to approximately 120 single-family accounts per year and approximately 36 multi-family units per year. Since this is a voluntary program, it is market driven by customer desire for the service. In 2010, the survey was completed for 129 single family accounts, 3 multi-family accounts and 3 commercial accounts.

6.4.2 LANDSCAPE SURVEY (FORMERLY BMP 1)

This DMM involves performing a landscape water survey that includes a check of irrigation system and timers for maintenance and repairs needs, developing a customer irrigation schedule, reviewing scheduling with the customer, and providing the customer with an evaluation. The City provides this service as part of the home water survey described in Section 6.4.1.

6.4.3 HIGH-EFFICIENCY CLOTHES WASHERS (HECWS) (FORMERLY BMP 6)

This DMM involves providing incentives or instituting ordinances requiring the purchase of high-efficiency clothes washers that meet an average water factor value of 5.0 or the WaterSense specification if it is less than 5.0. Currently, the City does not offer rebates for installation of HECWs nor does it require installation through ordinance. However, PG&E provides a $50 rebate for clothes washers and the City's conservation website provides a direct link to the PG&E rebate website. In the 2011-2013 period, the City plans to evaluate the cost-effectiveness of providing additional clothes washer rebates and compare its cost-effectiveness to that of other DMMs and water conservation

alternatives available. At this point in time, the City's total budget for rebates is limited due to severe water rate revenue constraints.

6.4.4 WATERSENSE SPECIFICATION TOILETS (FORMERLY BMP 14)

This DMM involves providing incentives or ordinances requiring the replacement of existing toilets using 3.5 or more gallons per flush (gpf) with a 1.28 gpf toilet (HET). It is estimated that the City has 5,800 pre-1993 single family homes and 2,300 multi-family pre-1993 units, most of which still have 3.5 gpf or greater toilets.

To begin providing an incentive to homeowners and business owners to replace high-flow toilets, in February 2010, the City initiated a rebate program that provides up to $125 per toilet retrofit. The rebates are marketed through advertising in bill inserts, bill messages, website, and newsletters. In 2010, a total of 129 toilets were retrofitted under this program. The CUWCC MOU compliance standard is to achieve the same number of toilet replacements as would be achieved through a retrofit-on-resale ordinance.

6.4.5 WATERSENSE SPECIFICATIONS (WSS) FOR RESIDENTIAL DEVELOPMENT

This aspect of residential DMMs was not included in the original BMPs, but is a new requirement of the CUWCC MOU. It involves providing incentives (such as rebates, recognition programs, or reduced connection fees), or ordinances requiring residential construction to meet WSS for single-family and multi-family housing units until a state or federal regulation is passed requiring this standard. Beginning in 2012, state law will require all toilets sold within California to be 1.28 gpf HET toilets (the current WSS standard). This new standard eliminates the need for a local ordinance. In addition, the California Green Building Standards Code (Title 24, Part II) effective January 1, 2011, now requires fixtures in new development to meet Water Sense Specifications. Paso Robles adopted these codes in late 2010.

6.5 COMMERCIAL, INDUSTRIAL, AND INSTITUTIONAL PROGRAMS (CII) (FORMERLY BMP 9)

The goal of this DMM, as outlined by the CUWCC MOU, is to achieve a 10 percent reduction in baseline use for this sector over a 10-year period. This can be accomplished though implementation of flexible best management practices that fit the City's customer characteristics. Compliance with these measures is based on meeting goals for percentage reductions in CII annual water use.

Currently, the City offers water surveys and audits to commercial customers upon request. In 2010, a letter was sent to the top 100 commercial customers offering this service. The City's toilet rebate program, which provides an incentive to replace conventional high-flow toilets with HET models, is also available to CII customers.

The next step in implementing this DMM is the identification and prioritization of CII customers based on water use and customer type. In July 2007, the City had 576 commercial/industrial/ institutional customers. Total billed consumption for 2007 (the year of the severe economic recession) was 1,215.52

acre-feet (16.0 percent of total consumption). In July 2009, the number of accounts had increased to 698, but total CII water use for 2009 had decreased by 22.8 percent to 938.31 acre-feet (15.4 percent of total billed consumption). This reduction is attributed to two factors: 1) mandatory outdoor watering restrictions implemented in May 2009 and associated public outreach efforts, and 2) the local impact of the economic downturn. The vacancy rate for commercial space in 2009/10 has been estimated at over 30 percent.

The focus of the City's CII program efforts in the future will be to offer comprehensive water audits to CII customers, similar to the program implemented in 2010 for residential customers. Implementation will depend on the availability of additional funding for the conservation program to hire a full-time staff person to perform audits and administer the program. Rebates for the following CII measures will be evaluated for cost-effectiveness and potential implementation, over the next few years, pending available funding. These measures (from the CUWCC Demonstrated Savings Measures List) include: 1) high-efficiency urinals, 2) ultra-low volume urinals, 3) commercial high efficiency single load clothes washers, 4) cooling tower conductivity controllers, 5) connectionless food steamers, 6) medical equipment steam sterilizers, 7) water-efficient ice machines, 8) pressurized water brooms, and 9) dry vacuum pumps. Any programs chosen for implementation would be marketed directly to CII accounts through targeted outreach.

6.6 LANDSCAPE (FORMERLY BMP 5)

This DMM applies to non-residential accounts that are dedicated irrigation meters and CII accounts with mixed-use meters. Customers in this category include large turf areas such as schools and City parks, and the Mid-state fairgrounds. There are currently 12 schools that have extensive turf areas and 10 City parks that would be addressed under this DMM. The City currently does not supply water to any golf courses. In addition, the City provides water to approximately 95 "Landscape and Lighting" district meters that provide irrigation water to roadway medians and parkways.

The goal of this DMM is to achieve a higher level of irrigation efficiency with respect to plant water requirements, through assistance programs to customers. This program, when implemented, would include performing landscape water use audits and developing Eto-based irrigation water budgets for these accounts based on 70 percent of Eto. Playground and ball field areas are designated as "recreational" and are allowed to be watered at up to 100 percent of Eto. The CUWCC coverage requirement for this DMM is that each year, 9 percent of dedicated landscape meters receive an audit and water budget, and 1.5 percent of mixed use customers in this category are audited and landscape water budgets produced. The implementation schedule for this DMM will depend on the availability of additional funding to hire a full-time staff person to perform audits, produce water budgets, and perform other conservation program duties. This will be dependent on the implementation of new water rates and availability of additional funds for conservation programs. In 2012-13, as a first step in implementing this DMM, landscape accounts will be identified and prioritized for audits based on annual water use and other factors.

6.7 CONSERVATION PROGRAM IMPLEMENTATION SUMMARY

Since submitting the 2005 UWMP, Paso Robles has made significant progress in implementing the CUWCC Demand Management Measures. A Water Conservation Manager position has been staffed, and programs covering all 14 original DMMs (BMPs) have now been implemented, with the exception of BMPs 5, 6, and 14 as described above and summarized in **Table 34**. The remaining DMMs will be evaluated for implementation during the 2011-2015 period and implemented if cost-effective and funding becomes available. The cost-effectiveness analysis will compare the cost-effectiveness of the DMMs with that of other water conservation program opportunities applicable to the City of Paso Robles.

7. COMPLETED UWMP CHECKLIST

No.	UWMP Requirement [a]	Calif. Water Code Reference	Additional Clarification	UWMP Location
PLAN PREPARATION				
4	Coordinate the preparation of its plan with other appropriate agencies in the area, including other water suppliers that share a common source, water management agencies, and relevant public agencies, to the extent practicable.	10620(d)(2)		Section 1.2, p. 2-3 Table 1
6	Notify, at least 60 days prior to the public hearing on the plan required by Section 10642, any city or county within which the supplier provides water that the urban water supplier will be reviewing the plan and considering amendments or changes to the plan. Any city or county receiving the notice may be consulted and provide comments.	10621(b)		Section 1.1., p. 2 Appendix A
7	Provide supporting documentation that the UWMP or any amendments to, or changes in, have been adopted as described in Section 10640 et seq.	10621(c)		Section 1.1, p. 2 Appendix A
54	Provide supporting documentation that the urban water management plan has been or will be provided to any city or county within which it provides water, no later than 60 days after the submission of this urban water management plan.	10635(b)		Section 1.1, p. 2 Appendix A
55	Provide supporting documentation that the water supplier has encouraged active involvement of diverse social, cultural, and economic elements of the population within the service area prior to and during the preparation of the plan.	10642		Section 1.2, p. 2 Table 1
56	Provide supporting documentation that the urban water supplier made the plan available for public inspection and held a public hearing about the plan. For public agencies, the hearing notice is to be provided pursuant to Section 6066 of the Government Code. The water supplier is to provide the time and place of the hearing to any city or county within which the supplier provides water. Privately-owned water suppliers shall provide an equivalent notice within its service area.	10642		Section 1.1, p. 2 Appendix A
57	Provide supporting documentation that the plan	10642		Section 1.1,

	has been adopted as prepared or modified.			p. 2 Appendix A
58	Provide supporting documentation as to how the water supplier plans to implement its plan.	10643		Section 3.4, p. 9 Section 5.3, p. 35-37 and Appendices B, C and F Section 6-DMMs
59	Provide supporting documentation that, in addition to submittal to DWR, the urban water supplier has submitted this UWMP to the California State Library and any city or county within which the supplier provides water supplies a copy of its plan no later than 30 days after adoption. This also includes amendments or changes.	10644(a)		Section 1.1, p. 2 Appendix A
60	Provide supporting documentation that, not later than 30 days after filing a copy of its plan with the department, the urban water supplier has or will make the plan available for public review during normal business hours	10645		Section 1.1, p. 2 Appendix A
SYSTEM DESCRIPTION				
8	Describe the water supplier service area.	10631(a)		Section 2, p. 4-5
9	Describe the climate and other demographic factors of the service area of the supplier	10631(a)		Section 2.2, p. 4 Table 2
10	Indicate the current population of the service area	10631(a)	Provide the most recent population data possible. Use the method described in "Baseline Daily Per Capita Water Use."	Section 2.3, p. 5 Table 3
11	Provide population projections for 2015, 2020, 2025, and 2030, based on data from State, regional, or local service area population projections.	10631(a)	2035 and 2040 can also be provided to support consistency with Water Supply Assessments and Written	Section 2.3, p. 5 Table 3

			Verification of Water Supply documents.	
12	Describe other demographic factors affecting the supplier's water management planning.	10631(a)		Section 2.3, p. 5 Section 4.1.1, p.14-18
SYSTEM DEMANDS				
1	Provide baseline daily per capita water use, urban water use target, interim urban water use target, and compliance daily per capita water use, along with the bases for determining those estimates, including references to supporting data.	10608.20(e)		Section 3.2, p. 7-8 Tables 7 and 8
2	*Wholesalers:* Include an assessment of present and proposed future measures, programs, and policies to help achieve the water use reductions. *Retailers:* Conduct at least one public hearing that includes general discussion of the urban retail water supplier's implementation plan for complying with the Water Conservation Bill of 2009.	10608.36 10608.26(a)	Retailers and wholesalers have slightly different requirements	Section 1.1, p. 2 Appendix A
3	Report progress in meeting urban water use targets using the standardized form.	10608.40		Section 3.4, p. 9
25	Quantify past, current, and projected water use, identifying the uses among water use sectors, for the following: (A) single-family residential, (B) multifamily, (C) commercial, (D) industrial, (E) institutional and governmental, (F) landscape, (G) sales to other agencies, (H) saline water intrusion barriers, groundwater recharge, conjunctive use, and (I) agriculture.	10631(e)(1)	Consider 'past' to be 2005, present to be 2010, and projected to be 2015, 2020, 2025, and 2030. Provide numbers for each category for each of these years.	Section 3.1, p. 6-7 Section 3.3, p. 8-9 Tables 4 and 5
33	Provide documentation that either the retail agency provided the wholesale agency with water use projections for at least 20 years, if the UWMP agency is a retail agency, OR, if a wholesale agency, it provided its urban retail customers with future planned and existing water source available to it from the wholesale agency during the required water-year types	10631(k)	Average year, single dry year, multiple dry years for 2015, 2020, 2025, and 2030.	Not Applicable
34	Include projected water use for single-family and multifamily residential housing needed for lower	10631.1(a)		Section 3.1, p. 7

	income households, as identified in the housing element of any city, county, or city and county in the service area of the supplier.			Table 6
SYSTEM SUPPLIES				
13	Identify and quantify the existing and planned sources of water available for 2015, 2020, 2025, and 2030.	10631(b)	The 'existing' water sources should be for the same year as the "current population" in line 10. 2035 and 2040 can also be provided.	Section 4.5, p. 25-27 Table 15
14	Indicate whether groundwater is an existing or planned source of water available to the supplier. If yes, then complete 15 through 21 of the UWMP Checklist. If no, then indicate "not applicable" in lines 15 through 21 under the UWMP location column.	10631(b)	Source classifications are: surface water, groundwater, recycled water, storm water, desalinated sea water, desalinated brackish groundwater, and other.	Section 4.1, p. 10
15	Indicate whether a groundwater management plan been adopted by the water supplier or if there is any other specific authorization for groundwater management. Include a copy of the plan or authorization.	10631(b)(1)		Section 4.1.1, p. 15-17
16	Describe the groundwater basin.	10631(b)(2)		Section 4.1.1, p. 10-14
17	Indicate whether the groundwater basin is adjudicated? Include a copy of the court order or decree.	10631(b)(2)		Section 4.1.1, p. 10
18	Describe the amount of groundwater the urban water supplier has the legal right to pump under the order or decree. If the basin is not adjudicated, indicate "not applicable" in the UWMP location column.	10631(b)(2)		Not applicable
19	For groundwater basins that are not adjudicated, provide information as to whether DWR has	10631(b)(2)		Section 4.1.1,

	identified the basin or basins as overdrafted or has projected that the basin will become overdrafted if present management conditions continue, in the most current official departmental bulletin that characterizes the condition of the groundwater basin, and a detailed description of the efforts being undertaken by the urban water supplier to eliminate the long-term overdraft condition. If the basin is adjudicated, indicate "not applicable" in the UWMP location column.			p. 12-18
20	Provide a detailed description and analysis of the location, amount, and sufficiency of groundwater pumped by the urban water supplier for the past five years	10631(b)(3)		Section 4.2, p. 19-21 Table 9
21	Provide a detailed description and analysis of the amount and location of groundwater that is projected to be pumped.	10631(b)(4)	Provide projections for 2015, 2020, 2025, and 2030.	Section 4.2, p. 19-21 Table 10
24	Describe the opportunities for exchanges or transfers of water on a short-term or long-term basis.	10631(d)		Section 4.5, p. 26
30	Include a detailed description of all water supply projects and programs that may be undertaken by the water supplier to address water supply reliability in average, single-dry, and multiple-dry years, excluding demand management programs addressed in (f)(1). Include specific projects, describe water supply impacts, and provide a timeline for each project.	10631(h)		Section 4.5, p. 25-26 Section 5.1, p. 28-32 Tables 16-22
31	Describe desalinated water project opportunities for long-term supply, including, but not limited to, ocean water, brackish water, and groundwater.	10631(i)		Section 4.5, p. 26
44	Provide information on recycled water and its potential for use as a water source in the service area of the urban water supplier. Coordinate with local water, wastewater, groundwater, and planning agencies that operate within the supplier's service area.	10633		Section 4.1.3, p. 19 Section 4.4.4, p. 23-25 Tables 13-14
45	Describe the wastewater collection and treatment systems in the supplier's service area, including a quantification of the amount of wastewater collected and treated and the methods of wastewater disposal.	10633(a)		Section 4.4.1, p. 21-22 Tables 11-12

46	Describe the quantity of treated wastewater that meets recycled water standards, is being discharged, and is otherwise available for use in a recycled water project.	10633(b)		Section 4.4.2, p. 23 Section 4.4.4, p. 24 Tables 11-12
47	Describe the recycled water currently being used in the supplier's service area, including, but not limited to, the type, place, and quantity of use.	10633(c)		Section 4.1.3, p. 19 Section 4.4.4, p. 23-25 Table 15
48	Describe and quantify the potential uses of recycled water, including, but not limited to, agricultural irrigation, landscape irrigation, wildlife habitat enhancement, wetlands, industrial reuse, groundwater recharge, indirect potable reuse, and other appropriate uses, and a determination with regard to the technical and economic feasibility of serving those uses.	10633(d)		Section 4.1.3, p. 19 Section 4.4.4, p. 23-25 Tables 11-14
49	The projected use of recycled water within the supplier's service area at the end of 5, 10, 15, and 20 years, and a description of the actual use of recycled water in comparison to uses previously projected.	10633(e)		Section 4.4.4, p. 23-25 Table 15
50	Describe the actions, including financial incentives, which may be taken to encourage the use of recycled water, and the projected results of these actions in terms of acre-feet of recycled water used per year.	10633(f)		Section 4.4.4, p. 23-25 Table 14
51	Provide a plan for optimizing the use of recycled water in the supplier's service area, including actions to facilitate the installation of dual distribution systems, to promote recirculating uses, to facilitate the increased use of treated wastewater that meets recycled water standards, and to overcome any obstacles to achieving that increased use.	10633(g)		Section 4.1.3, p. 19 Section 4.4.4, p. 23-25
WATER SHORTAGE RELIABILITY AND WATER SHORTAGE CONTINGENCY PLANNING				
5	Describe water management tools and options to maximize resources and minimize the need to import water from other regions.	10620(f)		Section 4.1.1, p. 14-19
22	Describe the reliability of the water supply and vulnerability to seasonal or climatic shortage and	10631(c)(1)		Sections 5.1 and

	provide data for (A) an average water year, (B) a single dry water year, and (C) multiple dry water years.			5.2, p. 28-35 Tables 17-24
23	For any water source that may not be available at a consistent level of use - given specific legal, environmental, water quality, or climatic factors - describe plans to supplement or replace that source with alternative sources or water demand management measures, to the extent practicable.	10631(c)(2)		Section 5 p. 28-35 Tables 16 and 23
35	Provide an urban water shortage contingency analysis that specifies stages of action, including up to a 50-percent water supply reduction, and an outline of specific water supply conditions at each stage	10632(a)		Section 5.3 p. 35-37 Table 25
36	Provide an estimate of the minimum water supply available during each of the next three water years based on the driest three-year historic sequence for the agency's water supply.	10632(b)		Section 5.1.3 p. 30-32 Table 19
37	Identify actions to be undertaken by the urban water supplier to prepare for, and implement during, a catastrophic interruption of water supplies including, but not limited to, a regional power outage, an earthquake, or other disaster.	10632(c)		Section 5.2.6 p. 35 Table 26
38	Identify additional, mandatory prohibitions against specific water use practices during water shortages, including, but not limited to, prohibiting the use of potable water for street cleaning.	10632(d)		Section 5.3 p. 35-37 Table 28
39	Specify consumption reduction methods in the most restrictive stages. Each urban water supplier may use any type of consumption reduction methods in its water shortage contingency analysis that would reduce water use, are appropriate for its area, and have the ability to achieve a water use reduction consistent with up to a 50 percent reduction in water supply.	10632(e)		Section 5.3 p. 35-37 Table 27
40	Indicated penalties or charges for excessive use, where applicable.	10632(f)		Section 5.3 p. 35-37 Table 29
41	Provide an analysis of the impacts of each of the actions and conditions described in subdivisions (a) to (f), inclusive, on the revenues and expenditures of the urban water supplier, and proposed measures to overcome those impacts, such as the development of reserves and rate	10632(g)		Section 5.3 p. 35-37 Tables 30-32

	adjustments.			
42	Provide a draft water shortage contingency resolution or ordinance.	10632(h)		Appendix C
43	Indicate a mechanism for determining actual reductions in water use pursuant to the urban water shortage contingency analysis.	10632(i)		Section 5.3 p. 35-37 Table 33
52	Provide information, to the extent practicable, relating to the quality of existing sources of water available to the supplier over the same five-year increments, and the manner in which water quality affects water management strategies and supply reliability	10634	For years 2010, 2015, 2020, 2025, and 2030	Section 4.1.1, p. 10-17 Section 4.1.2, p. 18-19 Section 4.1.3, p. 19 Section 5.1.3, p.30-32 Section 5.2.4, p. 33-34
53	Assess the water supply reliability during normal, dry, and multiple dry water years by comparing the total water supply sources available to the water supplier with the total projected water use over the next 20 years, in five-year increments, for a normal water year, a single dry water year, and multiple dry water years. Base the assessment on the information compiled under Section 10631, including available data from state, regional, or local agency population projections within the service area of the urban water supplier.	10635(a)		Section 5.1.3, p. 30-33 Tables 20-22
DEMAND MANAGEMENT MEASURES				
26	Describe how each water demand management measures is being implemented or scheduled for implementation. Use the list provided.	10631(f)(1)	Discuss each DMM, even if it is not currently or planned for implementation. Provide any appropriate schedules.	Section 6, p. 38-46 Table 34 Appendix B Appendix F
27	Describe the methods the supplier uses to evaluate the effectiveness of DMMs implemented or described in the UWMP.	10631(f)(3)		Section 6, p. 38-46 Table 34

				Appendix B
28	Provide an estimate, if available, of existing conservation savings on water use within the supplier's service area, and the effect of the savings on the ability to further reduce demand.	10631(f)(4)		Section 6, p. 38-46 Appendix B Appendix F
29	Evaluate each water demand management measure that is not currently being implemented or scheduled for implementation. The evaluation should include economic and non-economic factors, cost-benefit analysis, available funding, and the water suppliers' legal authority to implement the work.	10631(g)	See 10631(g) for additional wording.	Section 6, p. 38-46 Appendix B Appendix F
32	Include the annual reports submitted to meet the Section 6.2 requirements, if a member of the CUWCC and signer of the December 10, 2008 MOU.	10631(j)	Signers of the MOU that submit the annual reports are deemed compliant with Items 28 and 29.	Section 6.1, p. 38-39 Appendix F

a The UWMP Requirement descriptions are general summaries of what is provided in the legislation.

8. REFERENCES

Boyle Engineering Corporation, *Nacimiento Reservoir-Reliability as a Water Source*, 2002.

Boyle Engineering Corporation, *Recycled Water Study Update,* September 2006.

Black & Veatch, City of Paso Robles Wastewater Treatment Plant Upgrade Facility Plan, July 2009.

California Department of Water Resources (DWR), Final *Guidebook to Assist Urban Water Suppliers to Prepare a 2010 Urban Water Management Plan,* March, 2011.

California Department of Water Resources, *Urban Water Use in California*, Bulletin 166-4, August 1994.

Fugro West, Inc. and Cleath and Associates, *Final Report, Paso Robles Groundwater Basin Study*, prepared for County of San Luis Obispo Public Works Department, August 2002.

Fugro West, Inc., ETIC Engineering, and Cleath and Associates, *Final Report, Paso Robles Groundwater Basin Study, Phase II, Numerical Model Development, Calibration, and Application,* prepared for County of San Luis Obispo Public Works Department, February 2005.

Fugro West, Inc., *Paso Robles Groundwater Basin Water Balance Review and Update*, prepared for County of San Luis Obispo, City of Paso Robles, City of Atascadero, Atascadero Mutual Water Company, and Templeton Community Services District, March 2010.

Gallagher, Ed, City of Paso Robles Planner, email communication to Keith Larson, City Water Conservation Coordinator, December 22, 2010. GEI, Overview of the Estrella Subarea of the Paso Robles Groundwater Basin, February 25, 2010, http://www.prcity.com/Government/departments/publicworks/water/groundwater.asp accessed January 20, 2011.

Kennedy/Jenks Consultants, City of Paso Robles 2010 Water Rate and Revenue Analysis Final Report, January 11, 2010.

Miranda, Casey, *Effects of Recycled Water on Landscape Plants*, Master's Thesis, Agriculture, Cal Poly San Luis Obispo, June 2010.

Padre Associates, Inc., Final Initial Study/Mitigated Negative Declaration Paso Robles Water Treatment Plant and Main East Pipeline Project, December 24, 2008.

Paso Robles Water Division, *Drinking Water Source Assessments*, prepared for California Department of Health Services, 2002, 2003 and 2006.

Paso Robles website, downloaded information on water rates and connection fees: http://www.prcity.com/government/departments/publicworks/water/water-rates.asp, Nacimiento Water Treatment Plant: http://www.prcity.com/government/departments/publicworks/ WatrTrtmtPlnt-

mnd.asp, and affordable rentals: http://www.prcity.com/government/departments/commdev/housing/rentals.asp, accessed October 13, 2010 and March 16, 2011.

Rincon Consultants, Inc., *City of El Paso de Robles General Plan 2003*, Adopted December 16, 2003.

San Luis Obispo County, Memorandum Report on Data Enhancement Plan, by Sylas Cranor to Water Resources Advisory Committee, October 7, 2009.

San Luis Obispo County, *Revised Resource Capacity Study, Water Supply in the Paso Robles Groundwater Basin*, July 2010.

Todd Engineers, *Update for the Paso Robles Groundwater Basin*, Report to Paso Robles Groundwater Basin Committee, December 2007.

Todd Engineers, *Evaluation of Paso Robles Groundwater Basin Pumping, Water Year 2006*, Prepared for the City of Paso Robles and San Luis Obispo County, May 2009.

United States Geological Survey (USGS), *Ground-Water Quality Data in the Monterey Bay and Salinas Valley Basins, California, 2005, Results from the California GAMA Program*, Justin T. Kulongoski and Kenneth Belitz, prepared in cooperation with the California State Water Resources Control Board, 2007.

Yates, Gus, *Peer Review of Paso Robles Groundwater Studies*, Memorandum to the City of Paso Robles, June 29, 2010.

Figures

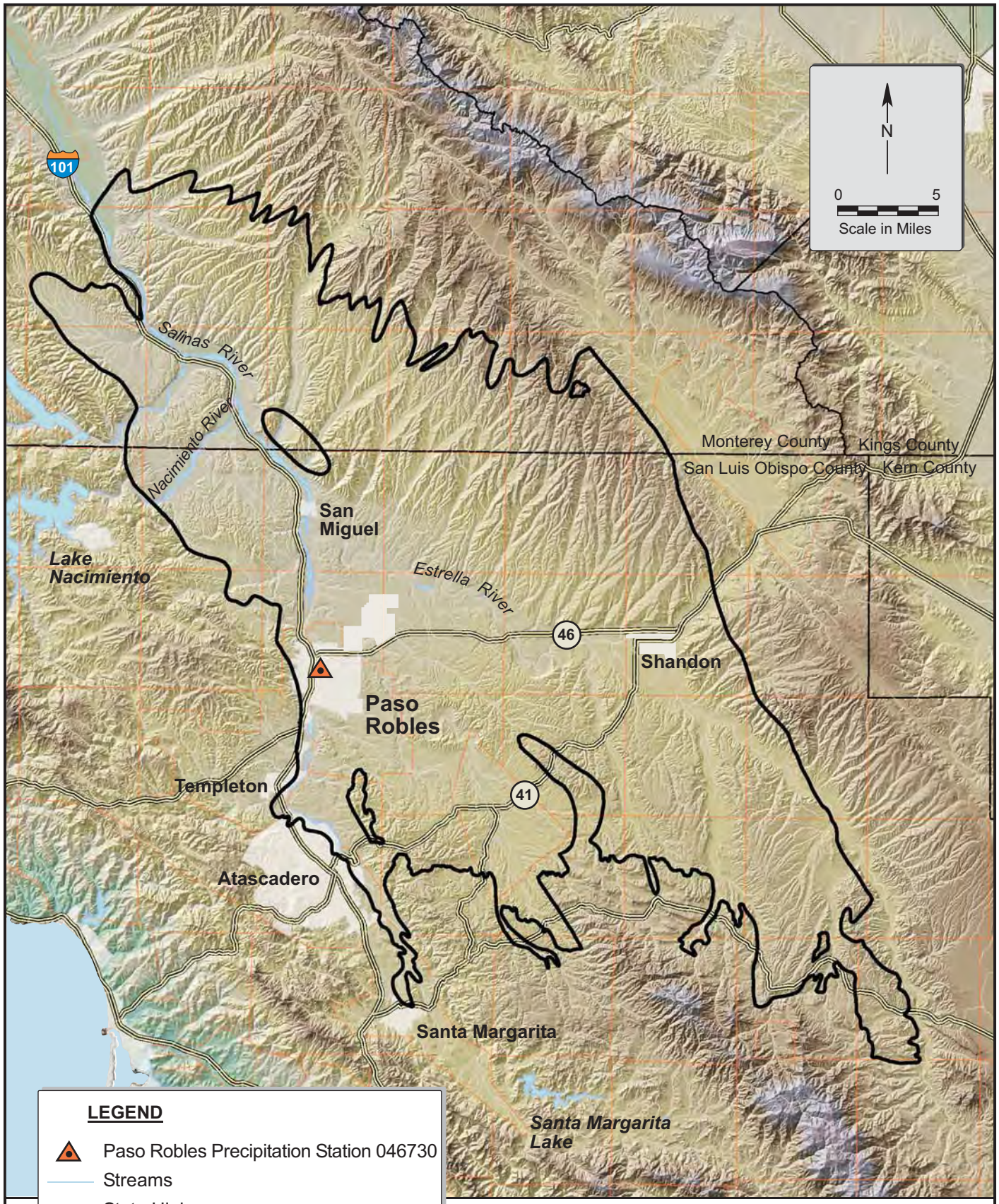

LEGEND

- Paso Robles Precipitation Station 046730
- Streams
- State Highways
- Basin Boundary
- Cities/Communities
- County Line

January 2011	**Figure 1**
TODD ENGINEERS Alameda, California	**Paso Robles Groundwater Basin**

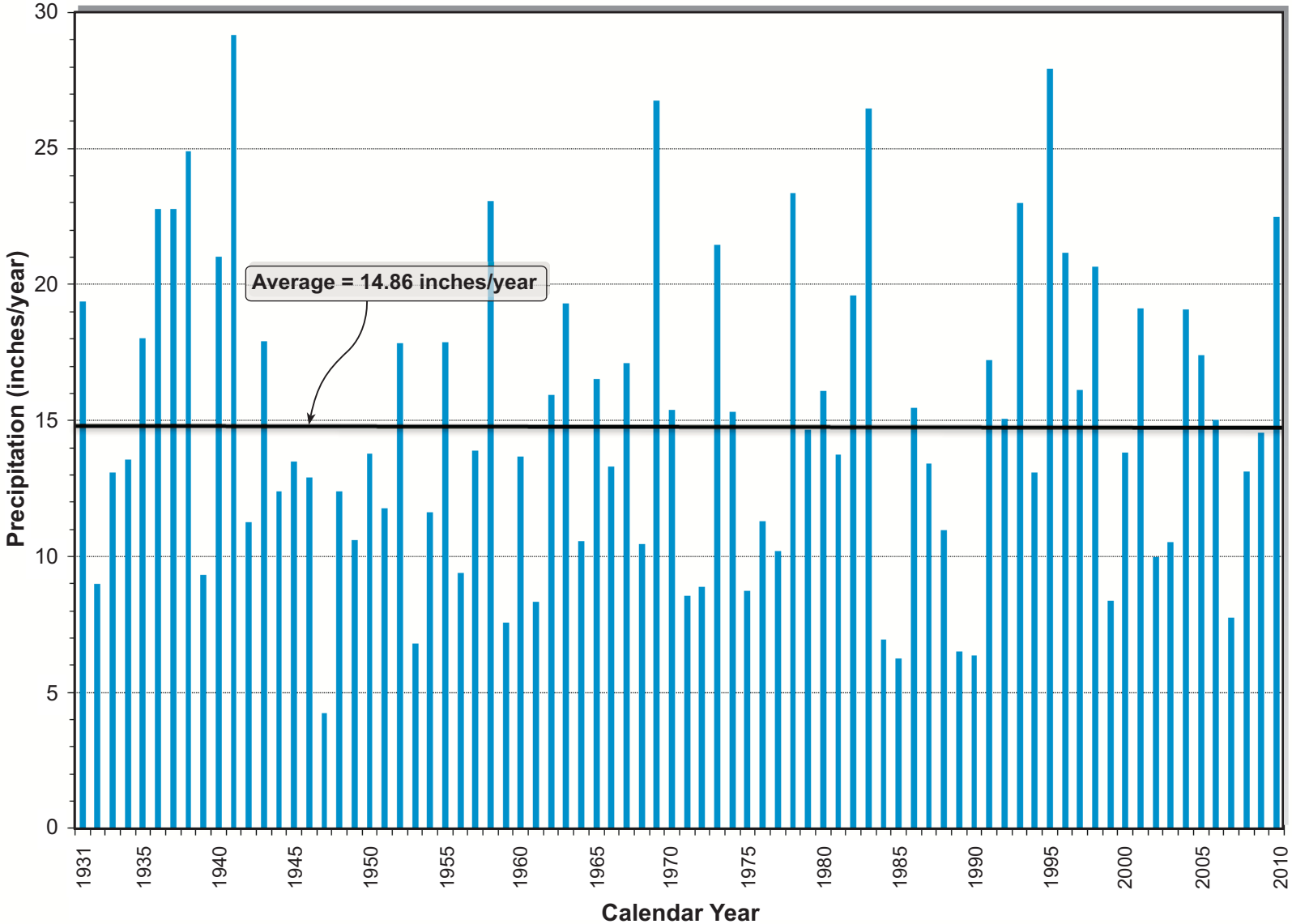

Precipitation data from Paso Robles Station 046730. Data is from January 1931 through December 2010.
Monthly Total Precipitation data table from wrcc.dri.edu/cgi-bin/cliMontpre.pl?ca6730.

January 2011	**Figure 2**
TODD ENGINEERS Alameda, California	**Paso Robles Precipitation**

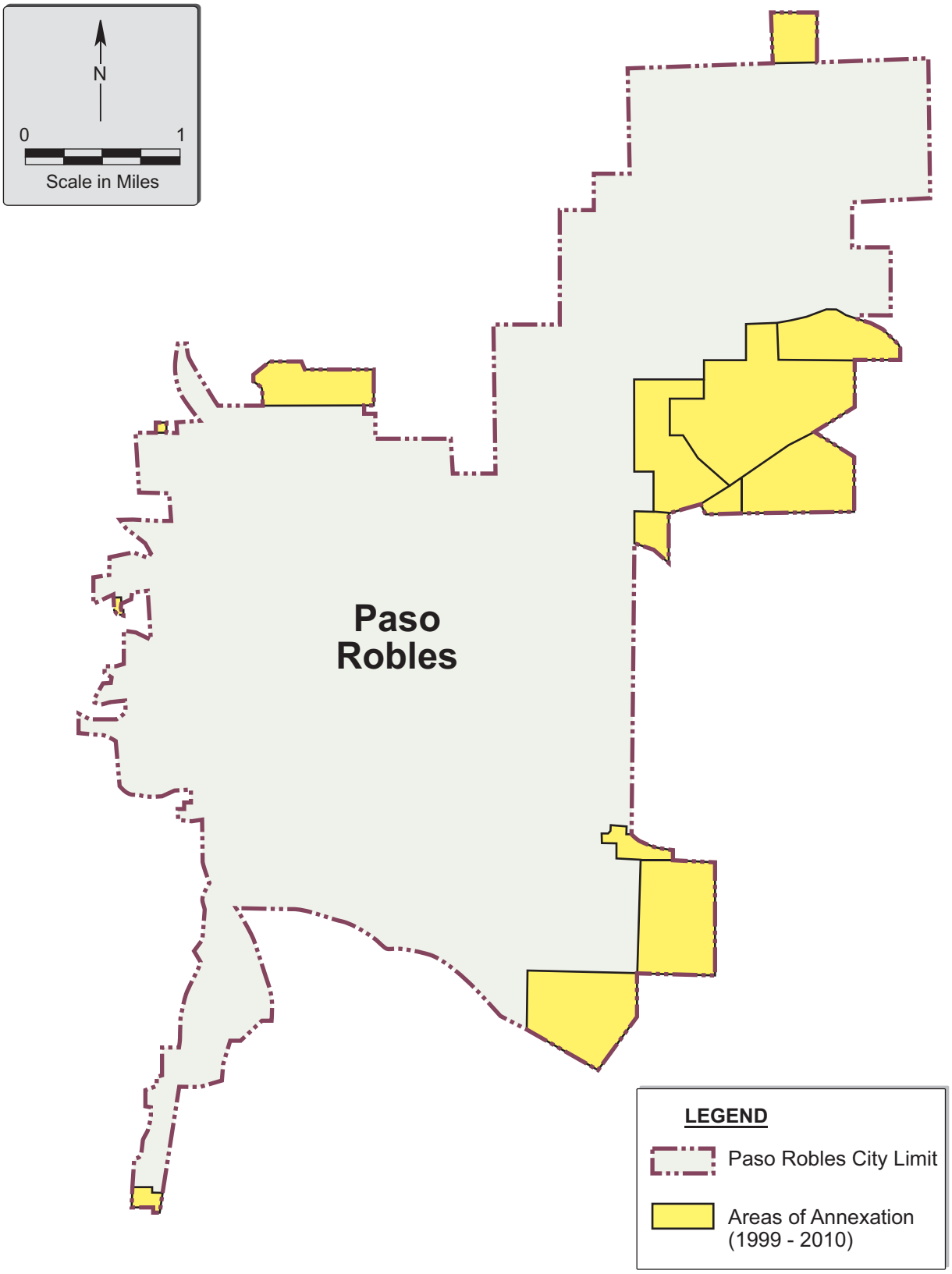

January 2011	**Figure 3** **Paso Robles** **Recent Annexations**
TODD ENGINEERS Alameda, California	

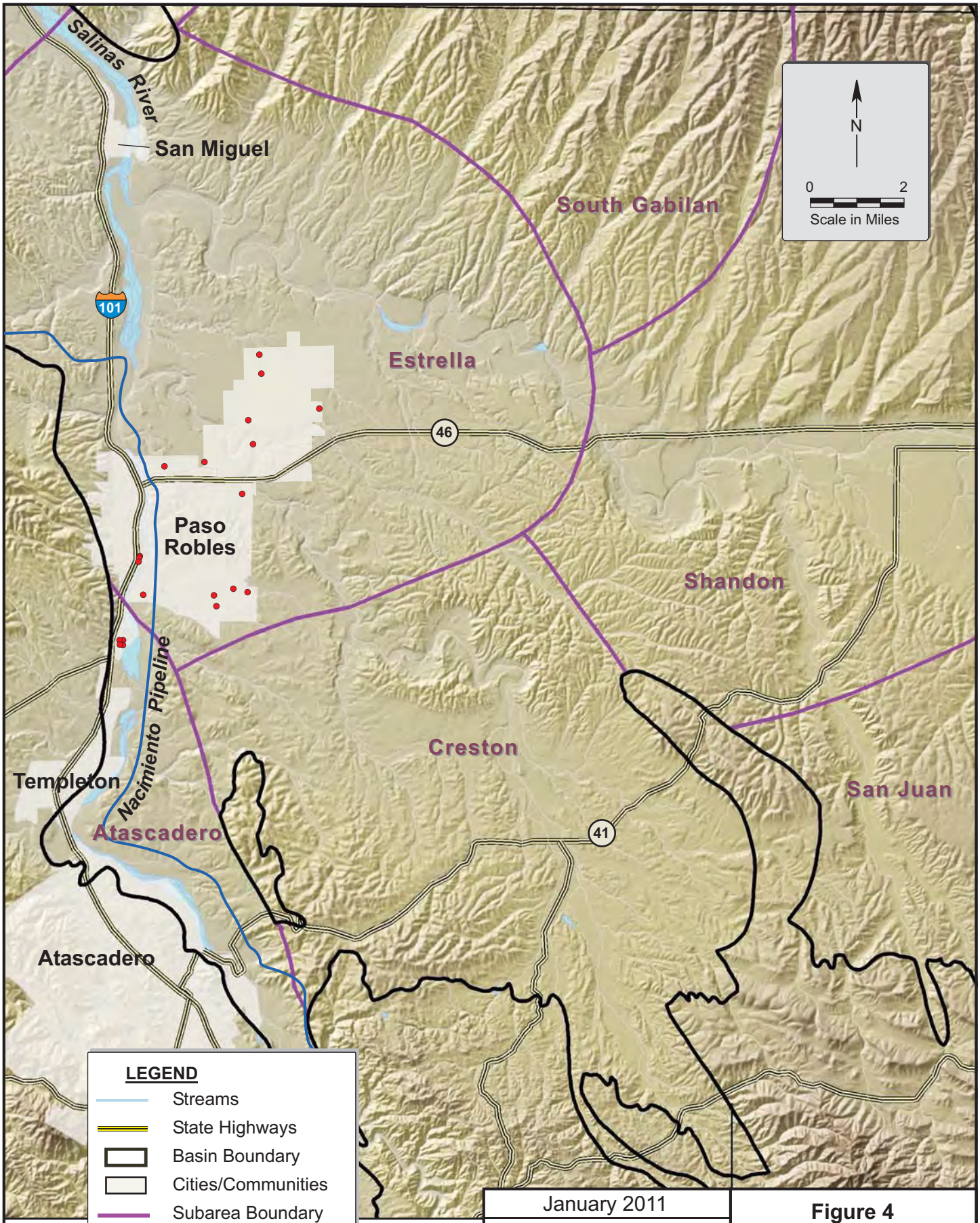

January 2011

TODD ENGINEERS
Alameda, California

Figure 4
Paso Robles Boundaries and Facilities

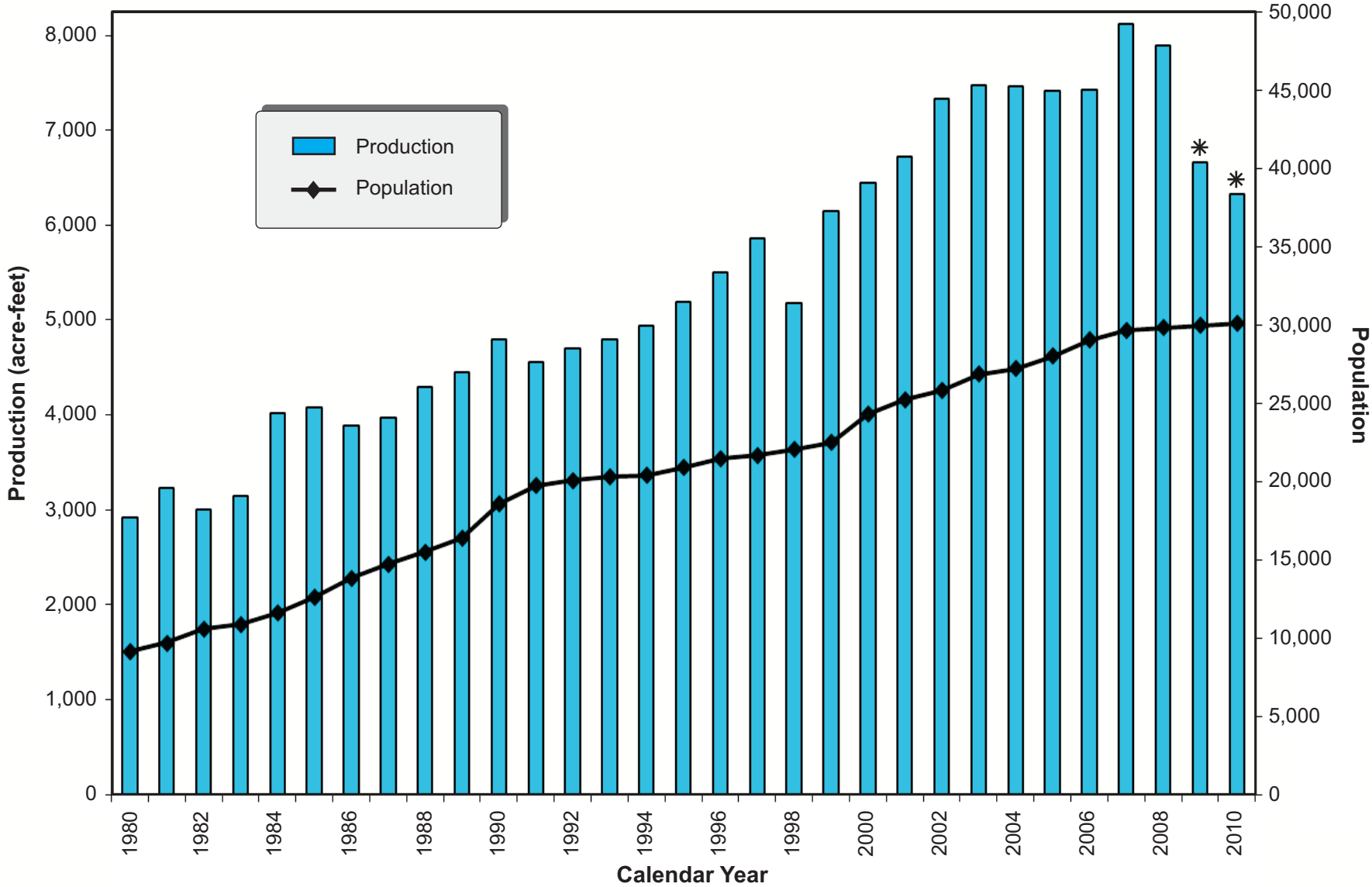

* Water Use in 2009 and 2010 decreased due to Level 2 City-wide mandatory outdoor water use restrictions.

January 2011	**Figure 5**
TODD ENGINEERS Alameda, California	**Paso Robles Water Production and Population**

Tables

Table 1 Coordination with Appropriate Agencies							
Coordinating Agencies	Participated in developing the plan	Commented on the draft	Attended public meetings	Was contacted for assistance	Was sent a copy of the draft plan	Was sent a notice of intention to adopt	Not involved / No information
Atascadero Mutual Water Company						X	
Templeton Community Services District						X	
San Luis Obispo County Public Works Department					X	X	
City of Atascadero						X	
Paso Robles Public Library			X		X	X	
California Regional Water Quality Control Board						X	
Paso Robles Chamber of Commerce						X	
San Miguel Community Services District						X	
Paso Robles Imperiled Overlying Rights (PRIOR)						X	
General Public		X	X			X	

Table 2 Climate Data							
	Historic Rainfall[1] (inches)			Average ETo[2] (inches)	Historic Temperature[3] (°F)		
	Average	Maximum	Minimum		Average	Average Maximum	Average Minimum
January	3.48	14.76	0.00	2.21	46.70	52.68	37.77
February	3.07	12.74	0.00	2.50	49.96	57.43	42.00
March	2.44	12.31	0.00	3.80	52.88	59.31	46.45
April	1.01	5.22	0.00	5.08	56.52	62.28	49.08
May	0.36	2.41	0.00	5.70	61.64	69.11	56.55
June	0.05	0.93	0.00	6.19	67.32	73.55	61.58
July	0.02	0.68	0.00	6.43	71.51	78.29	65.73
August	0.05	1.19	0.00	6.09	71.14	75.97	65.60
September	0.17	2.9	0.00	4.87	67.97	74.17	62.50
October	0.62	5.11	0.00	4.09	61.12	66.32	56.11
November	1.37	7.14	0.00	2.89	52.56	58.50	45.98
December	2.54	8.6	0.00	2.28	46.74	53.03	40.16
Average Calendar Year Total[4]	**14.86**	**29.19**	**4.24**	**52.13**	**-**	**-**	**-**
Monthly Average	**1.24**	**2.43**	**0.35**	**4.34**	**58.92**	**61.13**	**56.55**

1. Precipitation data from Paso Robles Station 046730. Data is from Jan 1894 through Dec 2010. Monthly Total Precipitation data table from www.wrcc.dri.edu/cgi-bin/cliMONtpre.pl?ca6730. Months with 6 or more missing days and years with 1 or more missing months are not included. 1931 - present are most complete years with 85 years included in the average annual calculation.

2. ETo data from CIMIS Station 163 Atascadero, Nov 2000 - Aug 2010 http://wwwcimis.water.ca.gov/cimis/frontMonthlyEToReport.do.

3. Temperature data from Paso Robles Station 046730. Data is from Jan 1894 through Dec 2010. Monthly Average Temperature table from www.wrcc.dri.edu/cgi-bin/cliMONtavt.pl?ca6730. Months with 6 or more missing days and years with 1 or more missing months are not included. 1911 - present are most complete years with 100 years included in the average annual calculation.

4. Note that Average Calendar Year Total may not be sum of numbers above but rather historical annual average.

Table 3 Population - Current and Projected							
	2005	2010	2015	2020	2025	2030	2035
Service Area Population[1]	27,361	30,072[2]	30,770[3]	37,385[4]	44,000[5]	44,000[5]	44,000[5]

1. Service area population is the population served by the distribution system and is approximately the same as the City population.

2. 2010 population from State Department of Finance's population estimate for 1/1/2010. Accessed 8/25/10, http://www.dof.ca.gov/research/demographic/reports/estimates/e-1/2009-10/.

3. Projected customer growth between 2010 and 2015 = 262 accounts (derived from City of Paso Robles, Supplemental Report Section - 2010 Uniform Water Rate Study, K/J, 11/22/10). Take half of FY2010-11 and half of FY2015-16 and assume 1 account per household and 2.663 people per household [30,072 + (262 x 2.663 pph) = 30,770 (rounded)]. Value of 2.663 people per household from City of Paso Robles General Plan Housing Element: 2009 Update.

4. Assumes linear growth between 2015 and 2025.

5. City's 2003 General Plan Amendment 2005-001 (City Council Resolution 05-249); City population in 2025 consistent with General Plan population planning threshold of 44,000 residents.

Table 4
Past, Current and Projected Water Deliveries

	2005[1]		2010[2]		2015		2020		2025		2030		2035	
Water Use Sectors	**# of Accounts**	**Deliveries (AFY)**	**# of Accounts**	**Deliveries (AFY)**	**# of Accounts**	**Deliveries (AFY)**	**# of Accounts**	**Deliveries (AFY)**	**# of Accounts**	**Deliveries (AFY)**	**# of Accounts**	**Deliveries (AFY)**	**# of Accounts**	**Deliveries (AFY)**
Single Family	8,273	3,865	8,661	3,435	8,882	4,441	10,653	5,326	12,425	6,180	12,425	6,180	12,425	6,180
Multi-family	386	794	401	573	502	847	600	1,020	696	1,195	696	1,195	696	1,195
Commercial	682	1,197	676	656	703	1,234	1,383	2,427	2,063	3,620	2,063	3,620	2,063	3,620
Industrial	64	69	71	154	74	161	81	176	89	194	89	194	89	194
Institutional/ Governmental	Included in Other sector	included in Other sector	76	91	76	91	76	91	76	91	76	91	76	91
Parks, Landscape Irrigation, Other[3]	331	1,238	391	840	392	1,176	393	1,180	393	1,180	393	1,180	393	1,180
Total Water Deliveries[4]	**9,736**	**7,163**	**10,276**	**5,749**	**10,629**	**7,950**	**13,186**	**10,220**	**15,742**	**12,460**	**15,742**	**12,460**	**15,742**	**12,460**

1. 2005 accounts and deliveries from 2005 DWR Public Water System Statistics. Other category includes some Industrial and Institutional/Govt water use.

2. 2010 accounts and deliveries from 2010 DWR Public Water System Statistics. 2010 water use was reduced by approximately 20 percent due to City-wide Level 2 mandatory outdoor water use restrictions.

3. Other category on DWR Public Water System Statistic forms includes hydrant meters. In 2005 and 2010, "Landscape Irrigation" category included some accounts that provided water to commercial/industrial and Institutional/Govt water use.

4. Total Water Deliveries from Tables 5 and 15. See Tables 5 and 15 for unaccounted-for water and potential conservation savings.

Note: Projected single family "baseline" deliveries for 2015 to 2025 and beyond are based on the average per account deliveries from 2006-2008.

Table 5 Total Water Use (AFY)							
Water Use	**2005**	**2010[2]**	**2015**	**2020**	**2025**	**2030**	**2035**
Unaccounted-for Water[1]	250	577	600	770	940	940	940
Water Deliveries (from Table 4)	7,163	5,749	7,950	10,220	12,460	12,460	12,460
Total Water Use	**7,413**	**6,326**	**8,550**	**10,990**	**13,400**	**13,400**	**13,400**
Potential Conservation and Recycling[3]	Not Applicable	Not Applicable	980	2,865	3,885	3,885	3,885
SB-7 Target Water Demands to Comply with 20% Demand Reductions by 2020[3]	Not Applicable	Not Applicable	**7,570**	**8,125**	**9,515**	**9,515**	**9,515**
SB-7 Target Water Demands in gallons per capita per day (gpcd)[3]	Not Applicable	Not Applicable	**217 gpcd**	**193 gpcd**	**193 gpcd**	**193 gpcd**	**193 gpcd**

1. 2005 and 2010 unaccounted-for water from DWR Public Water System Statistics forms. 2005 is 3.4% (250/7,413) and 2010 is 9.1% (577/6,326). Assumes unaccounted-for water is 7% of total water use for 2015-2035. Includes leaks, meter error, differences between metered water production and metered water usage, and unmetered use such as main flushing and firefighting.

2. 2010 water use is reduced by approximately 20 percent due to City-wide Level 2 mandatory outdoor water use restrictions and implementation of DMMs.

3. Senate Bill 7 Target Water Use: DWR Method 1 (10% reduction of gpcd baseline water use by 2015 and 20% reduction by 2020). Used ten-year baseline (1999-2008) of 241 gpcd from Table 8. For 2015: 241 gpcd x 0.90 = 217 gpcd. For 2020, 2025, and 2030: 241 gpcd x 0.80 = 193 gpcd. Then multiplied by population in Table 3 and divided by a unit conversion of 892.4 to get AFY target water use. Some values may be rounded.

Table 6 Low-Income Housing Projected Water Demands (AFY)						
	2010	**2015**	**2020**	**2025**	**2030**	**2035**
Single Family[1]	42	42	42	42	42	42
Multi-family[2]	176	244	244	244	244	244
Total Water Use	**218**	**286**	**286**	**286**	**286**	**286**

1. In 2010, 83 low-income single family homes. Assume use at 0.5 AF/home (2025 single family home use per connection).

2. In 2010, 606 low-income multi-family units (Paso Robles website, http://www.prcity.com/government/departments/commdev/housing/rentals.asp, 3/16/11). By 2015, 841 units (235 more) (Gallagher, 12/22/10 email). Assume use at 0.29 AFY/unit based on 4,098 multi-family buildout units and a demand of 1,195 AFY.

Table 7 Determination of Base Period (for Senate Bill 7)			
Base	**Parameter**	**Value**	**Units**
10- to 15-year Base Period	2008 total water production	7,891	acre-feet per year
	2008 total volume of delivered recycled water	0	acre-feet per year
	2008 recycled water as a percent of total deliveries	0	percent
	Number of years in base period[1]	10	years
	Year beginning base period range	1999	
	Year ending base period range[2]	2008	

1. The City used a 10-year base period as per SB 7 requirements: If the 2008 recycled water percent is less than 10 percent, then the first base period is a continuous 10-year period. If the amount of recycled water delivered in 2008 is 10 percent or greater, the first base period is a continuous 10- to 15-year period.

2. The ending year must be between December 31, 2004 and December 31, 2010.

Table 8 Base Daily Per Capita Water Use - 10-year Range (for Senate Bill 7)				
Base period year		**Distribution System Population[1]**	**Average Daily Well Production[2] (million gallons per day)**	**Annual Daily per Capita Water Use[2] (gpcd)**
Sequence Year	**Calendar Year**			
Year 1	1999	22,500	5.49	244
Year 2	2000	24,450	5.76	236
Year 3	2001	25,200	6.00	238
Year 4	2002	25,800	6.55	254
Year 5	2003	26,856	6.67	248
Year 6	2004	27,200	6.66	245
Year 7	2005	28,000	6.62	236
Year 8	2006	29,027	6.64	229
Year 9	2007	29,618	7.25	245
Year 10	2008	29,813	7.04	236
			Base Daily Per Capita Water Use[2]	**241**

1. Population data from California Department of Finance for City of Paso Robles.
2. Data from City supplied spreadsheet: Historic GPCD Use (8/4/10).

Table 9 Groundwater - Volume Produced[1] (AFY)						
Basin	**2005**	**2006**	**2007**	**2008**	**2009[2]**	**2010[2]**
Paso Robles Basin	2,856	3,366	4,103	3,819	2,794	2,338
Salinas River Underflow	4,558	4,065	4,023	4,072	3,868	3,988
Total Pumping	**7,414**	**7,431**	**8,126**	**7,891**	**6,662**	**6,326**
% of Total Supply[3]	**7.6%**	**7.6%**	**8.3%**	**8.1%**	**6.8%**	**6.5%**

1. All groundwater produced is metered.
2. Water use in 2009 and 2010 reduced due to City-wide Level 2 mandatory outdoor water use restrictions.
3. Total Supply is defined as the 97,700 AFY perennial yield of the Paso Robles Basin based on the Paso Robles Groundwater Basin Study (Fugro, 2005). The perennial yield value does not differentiate Salinas River underflow from basin groundwater.

Table 10 Groundwater - Volume Projected to be Produced (AFY)					
Basin	**2015**	**2020**	**2025**	**2030**	**2035**
Paso Robles Basin	100	990	3,400	3,400	3,400
Salinas River Underflow	4,450	4,600	4,600	4,600	4,600
Total Pumping	**4,550**	**5,590**	**8,000**	**8,000**	**8,000**
% of Total Supply[1]	**4.7%**	**5.7%**	**8.2%**	**8.2%**	**8.2%**

1. Total Supply is defined as the 97,700 AFY perennial yield of the Paso Robles Basin based on the Paso Robles Groundwater Basin Study (Fugro, 2005). The perennial yield value does not differentiate Salinas River underflow from basin groundwater.

Table 11 Recycled Water - Wastewater Collection and Treatment (AFY)							
Type of Wastewater	**2005[1]**	**2010[2]**	**2015[3]**	**2020[3]**	**2025[4]**	**2030[4]**	**2035[4]**
Wastewater Collected and Treated in Service Area	3,315	3,297	3,830	4,620	5,410	5,410	5,410
Volume that Meets Recycled Standard for Reuse[5]	0	0	0	0	650	650	650

1. 2005 from City Wastewater Division WWTP flow table.

2. 2010 from City Wastewater Division WWTP flow table.

3. 2015 and 2020 assumes average annual flow rate of 0.123 AF/capita (see footnote 4). Values may be rounded.

4. 2025 WWTP buildout average daily flow of 4.84 mgd from *City of Paso Robles Wastewater Treatment Plant Upgrade Facility Plan* (Black and Veatch, July 2009) based on: "the influent design flows are calculated based on a population of 44,000 for 2025 buildout, and anticipated 1,500 population from the California Youth Authority facility, and Templeton Community Services District's contractual sewer average flow of 0.443 mgd." Values may be rounded.
At a population of 44,000, average annual flow will be 0.123 AF/capita (109.8 gpd/capita).

5. Includes direct use for irrigation at existing and new parks, schools, roadway landscaping, and potential deliveries to users outside of the city now pumping groundwater.

Table 12 Recycled Water - Non-Recycled Wastewater Disposal (AFY)							
Method of Disposal	**Treatment Level**	**2010**	**2015**	**2020**	**2025**	**2030**	**2035**
Ponds	**Secondary/Advanced Secondary[1]**	3,297	3,830	4,620	4,760	4,760	4,760
	Total	**3,297**	**3,830**	**4,620**	**4,760**	**4,760**	**4,760**

1. Values from Table 11. Plans call for WWTP to be upgraded to advanced secondary treatment by 2015.

Table 13 Recycled Water - Projected Future Use (AFY)							
Use Type	**Description**	**Feasibility**	**2015**	**2020**	**2025**	**2030**	**2035**
Recycled Water[1]	**See footnote 1**	**Under review**	0	0	650	650	650
		Total	**0**	**0**	**650**	**650**	**650**

1. Values from Table 11. Includes direct use for irrigation at existing and new parks, schools, roadway landscaping, and potential deliveries to users outside of the City now pumping groundwater.

Table 14 Methods to Encourage Recycled Water Use (AFY)					
	Projected Results				
Actions	**2015**	**2020**	**2025**	**2030**	**2035**
Financial Incentives and Public Education[1]	0	0	650	650	650
Total	**0**	**0**	**650**	**650**	**650**

1. Values from Table 11. Includes direct use for irrigation at existing and new parks, schools, roadway landscaping, and potential deliveries to user outside the city now pumping groundwater.

Table 15 Water Supplies Needed to Meet Demands - Current and Projected (AFY)						
Water Supply Sources	**2010[8]**	**2015**	**2020**	**2025**	**2030**	**2035**
Basin Wells[1]	2,338	100	990	3,400	3,400	3,400
River Wells	3,988	4,450	4,600	4,600	4,600	4,600
Nacimiento Water [2, 9]	0	4,000	5,400	5,400	5,400	5,400
Demand Without Potential Conservation[3]	**6,326**	**8,550**	**10,990**	**13,400**	**13,400**	**13,400**
Potential Conservation and Recycled Water Savings						
BMP/DMM Conservation[4]	0	364	1,038	1,617	1,617	1,617
Price Elasticity of Water Rates Conservation[5]	0	616	1,827	1,618	1,618	1,618
Recycled Water (Phase 1 Direct Use)[6]	0	0	0	650	650	650
SB-7 Target Water Demands in acre feet per year (AFY) to Comply with 20% Demand Reductions by 2020[7]	**Not Applicable**	**7,570**	**8,125**	**9,515**	**9,515**	**9,515**
SB-7 Target Water Demands in gallons per capita per day (gpcd)[7]	**Not Applicable**	**217 gpcd**	**193 gpcd**	**193 gpcd**	**193 gpcd**	**193 gpcd**

1. Basin well pumping = Demand without additional conservation - River wells - Nacimiento water. Conservation savings, and future recycled water use will reduce basin well use from amounts shown.

2. Nacimiento use consistent with assumption developed for the City of Paso Robles 2010 Uniform Water Rate Study, Final Report (K/J, 1/25/10). Acquisition of 1,400 AFY of additional Nacimiento water was modeled to occur in FY 21-22; for this table, delivery assumed in 2020 since closer than 2025.

3. 2025 demand of 13,400 AFY based on land use zoning and a population threshold of 44,000.

4. Conservation savings from Appendix B.

5. Estimates for conservation derived from price elasticity impacts of planned water rate increases = Demand without Potential Conservation - SB7 Target Demand - BMP/DMM Conservation - Potential Recycled Water Use].

6. Projected direct use for irrigation at existing and new parks, schools, roadway landscaping, and potentially other users outside of the city.

7. Senate Bill 7 Target Water Use based on 10% reduction of gpcd baseline water use by 2015 and 20% reduction by 2020 multiplied by projected population. (See Table 8 for calculation of baseline use of 241 gpcd)

8. Actual 2010 water use was reduced by approximately 20 percent due to City-wide Level 2 mandatory outdoor water use restrictions.

9. In order to limit reliance on the highly-stressed groundwater basin, new development - per City policy - is required to be served with surface and recycled water.

Table 16 Future Water Supply Projects								
Project Name	**Projected Start Date**	**Projected Completion Date**	**Potential Project Constraints**	**Normal-Year (AF)[1]**	**Single-Dry Year (AF)**	**First Multiple-Dry Year (AF)**	**Second Multiple-Dry Year (AF)**	**Third Multiple-Dry Year (AF)**
Nacimiento	ongoing	2015	Funding Delay	4,000	4,000	4,000	4,000	4,000
Future Nacimiento	unknown	2020	No Funding	1,400	1,400	1,400	1,400	1,400
Recycled	unknown	2025	Funding Delay	650	650	650	650	650

1. Use of Nacimiento and recycled water will provide additional reliability benefits. A Recycled Water Master Plan is currently in development.

Table 17 Basis of Water Year Data	
Water Year Type	**Base Year(s)**
Average Water Year	2006
Single-Dry Water Year	2007
Multiple-Dry Water Years	1987-1990

Table 18 Supply Reliability - Historic Conditions (AFY)					
Average / Normal Water Year (2006)	**Single Dry Water Year (2007)**	**Multiple Dry Water Years**			
		Year 1 (1987)	**Year 2 (1988)**	**Year 3 (1989)**	**Year 4 (1990)**
7,431	7,431	7,431	7,431	7,431	7,431
Percent of Normal	100%	100%	100%	100%	100%
Potential Peaking Problems	Yes	Yes	Yes	Yes	Yes

Table 19 Supply Reliability - Current Water Sources (AFY)				
Water Supply Sources	**Average/ Normal Water Year Supply (2006)**	**Multiple Dry Water Year Supply**		
		2011	**2012**	**2013**
Percolating Groundwater	3,366	3,366	3,366	3,366
Underflow	4,065	4,065	4,065	4,065
Nacimiento[1]	0	0	0	0
Total	**7,431**	**7,431**	**7,431**	**7,431**
Percent of Normal	100%	100%	100%	100%
Potential Peaking Problems	Yes	Yes	Yes	Yes

1. Nacimiento water available after 2015

Table 20 Supply and Demand Comparison - Normal Year (AFY)					
	2015[1]	2020[2]	2025[2]	2030	2035
Supply Totals	8,550	10,990	13,400	13,400	13,400
Demand Totals (with potential conservation)	7,570	8,125	9,515	9,515	9,515
Difference (Supply-Demand)	980	2,865	3,885	3,885	3,885
Difference as % of Supply	11%	26%	29%	29%	29%
Difference as % of Demand	13%	35%	41%	41%	41%

Demand totals include additional potential conservation and recycling savings to meet SB 7 target demands (Tables 5 and 15)
1. 4,000 AFY of Nacimiento water projected to become available (Table 16)
2. 1,400 AFY of additional Nacimiento water projected to become available in 2020 and 650 AFY of projected recycled water use by 2025 (Table 16)

Table 21 Supply and Demand Comparison - Single Dry Year (AFY)					
	2015[1]	2020[2]	2025[2]	2030	2035
Supply Totals	8,550	10,990	13,400	13,400	13,400
Demand Totals (with potential conservation)	7,570	8,125	9,515	9,515	9,515
Difference (Supply-Demand)	980	2,865	3,885	3,885	3,885
Difference as % of Supply	11%	26%	29%	29%	29%
Difference as % of Demand	13%	35%	41%	41%	41%

Demand totals include additional potential conservation and recycling savings to meet SB 7 target demands (Tables 5 and 15)
1. 4,000 AFY of Nacimiento water projected to become available (Table 16)
2. 1,400 AFY of additional Nacimiento water projected to become available in 2020 and 650 AFY of projected recycled water use by 2025 (Table 16)

Table 22 Supply and Demand Comparison — Multiple Dry-Year Events (AFY)						
		2015[1]	2020[2]	2025[2]	2030	2035
Multiple-Dry Year First Year Supply	Supply Totals	8,550	10,990	13,400	13,400	13,400
	Demand Totals (with potential conservation)	7,570	8,125	9,515	9,515	9,515
	Difference	980	2,865	3,885	3,885	3,885
	Difference as % of Supply	11%	26%	29%	29%	29%
	Difference as % of Demand	13%	35%	41%	41%	41%
Multiple-Dry Year Second Year Supply	Supply Totals	8,550	10,990	13,400	13,400	13,400
	Demand Totals (with potential conservation)	7,570	8,125	9,515	9,515	9,515
	Difference	980	2,865	3,885	3,885	3,885
	Difference as % of Supply	11%	26%	29%	29%	29%
	Difference as % of Demand	13%	35%	41%	41%	41%
Multiple-Dry Year Third Year Supply	Supply Totals	8,550	10,990	13,400	13,400	13,400
	Demand Totals (with potential conservation)	7,570	8,125	9,515	9,515	9,515
	Difference	980	2,865	3,885	3,885	3,885
	Difference as % of Supply	11%	26%	29%	29%	29%
	Difference as % of Demand	13%	35%	41%	41%	41%

Demand totals include additional potential conservation and recycling savings to meet target demands (Tables 5 and 15)
1. 4,000 AFY of Nacimiento water projected to become available (Table 16)
2. 1,400 AFY of additional Nacimiento water projected to become available in 2020 and 650 AFY of projected recycled water use by 2025 (Table 16)

Table 23 Factors Resulting in Inconsistency of Supply				
Water Supply Source	**Legal**	**Environmental**	**Water Quality**	**Climatic**
Basin Groundwater	Potential basin adjudication	Potential overdraft, earthquake damage, power outage	Potential contamination	Long-term severe drought
Underflow Groundwater	Loss or reduction of water rights	Earthquake damage, power outage	Potential contamination	Long-term severe drought
Nacimiento Water	None anticipated	Earthquake damage	Potential contamination	Long-term severe drought
Recycled Water	Future restrictions on use and quality	Earthquake damage	Potential salt loading in basin	None anticipated

Table 24 Water Quality - Current and Projected Water Supply Impacts (AFY)							
Water Source	**Description of Condition**	**2010**	**2015[1]**	**2020[2]**	**2025[2]**	**2030**	**2035**
Groundwater	Good	0	0	0	0	0	0
Nacimiento	Good	Not applicable	0	0	0	0	0
Recycled	Will meet requirements	Not applicable	Not applicable	Not applicable	0	0	0

1. 4,000 AFY of Nacimiento water projected to become available (Table 16)

2. 1,400 AFY of additional Nacimiento water projected to become available in 2020 and 650 AFY of projected recycled water use by 2025 (Table 16)

Table 25 Water Shortage Contingency Rationing Stages to Address Water Supply Shortages		
Stage No.	**Water Use Reductions/Rationing**	**Percent Shortage**
1	Voluntary 10% reduction	10%
2	Mandatory 20% reduction	20%
3	Mandatory 30% reduction	30%
4	Mandatory 50% reduction	50%

Table 26 Preparation Actions for a Catastrophe	
Possible Catastrophe	**Summary of Actions**
Regional Power Outage	Backup generator
Earthquake	Initiate Ordinance No. 956 N.S. (Water Conservation and Water Shortage Contingency Plan)
Water Quality Impact	Minimized by initiation of DWSAP, response similar to earthquake
System Failure	Response similar to earthquake

Table 27 Water Shortage Contingency Consumption Reduction Methods		
Consumption Reduction Methods	**Stage When Method Takes Effect**	**Projected Reduction (percent)**
Incentives to reduce water consumption	1	10
Education and outreach program	1	10
Voluntary rationing	1	10
Mandatory rationing	2 through 4	20 to 50
Use prohibitions	1 through 4	10 to 50
Water allocations per customer	2 through 4	20 to 50
Restrict for only priority uses	4	50

Table 28 Water Shortage Contingency Mandatory Prohibitions	
Examples of Prohibitions	**Stage When Prohibition Becomes Mandatory**
Irrigation restrictions	2
Uncorrected plumbing leaks	3
Construction water uses	3
Washing cars	3
Street and sidewalk cleaning	4
Residential pond and spa filling	4

Table 29 Water Shortage Contingency - Penalties and Charges	
Penalties or Charges	**Stage When Penalty Takes Effect**
Fines or penalty surcharges	2 to 4
Installation of flow-restricting device	2 to 4

Table 30 Water Shortage Contingency Actions and Conditions that Impact Revenues	
Type	**Anticipated Revenue Reduction**
Reduced Sales/Income[1]	$270,000 to $540,000

1. 10% or 20% of the 2004 water revenue of $2.7 million from Boyle (July 2005)

Table 31 Water Shortage Contingency Actions and Conditions that Impact Expenditures	
Category	**Anticipated Cost**
Increase Staff Cost	0
Increased O&M Cost	0
Increased Cost of Supply and Treatment	0

Table 32 Water Shortage Contingency Proposed Measures to Overcome Revenue Impacts	
Names of Measure	**Summary of Effects**
Use of Reserves	Short-term use
Rate Adjustment	For severe situations

Table 33 Water Shortage Contingency Water Use Monitoring Mechanisms	
Mechanism for Determining Actual Reductions	**Type data expected**
Monitoring Production	Weekly volumes
Monitoring Distribution	Weekly volumes
Increased Select Meter Reading	Weekly volumes
Monitoring WWTP Inflow	Weekly volumes

Table 34 DMM Implementation Summary		
DMM	**Schedule**	**Progress since 2005**
Utility Operations Programs		
DMM 12. Conservation Coordinator	Ongoing	Yes
DMM 13. Water Waste Prohibition	Ongoing	Yes
DMM 10. Wholesale Agency Programs	Not applicable	Not applicable
DMM 3. System Water Audits	Ongoing	Yes
DMM 4. Metering with Commodity Rates	Ongoing	Yes
DMM 11. Conservation Pricing	Ongoing	Yes
Education Programs		
DMM 7. Public Information Programs	Ongoing	Yes
DMM 8. School Education Programs	Ongoing	Yes
Residential Measures		
DMM 1. Water Survey Programs	Ongoing	Yes
DMM 2. Residential Plumbing Retrofits	Ongoing	Yes
DMM 6. High Efficiency Washing Machines	Under review	No
DMM 14. Ultra-Low-Flush Toilets	Ongoing	Yes
Water Sense Specifications	Ongoing	Yes
Commercial, Industrial, and Institutional		
DMM 9. Conservation of CII	Ongoing	Partial
Landscape		
DMM 5. Large Landscape Programs	2012-2013	No

Appendix A

Resolution Adopting the Urban Water Management Plan and Proof of Public Hearing

RESOLUTION NO. 11-081

A RESOLUTION OF THE CITY COUNCIL OF THE CITY OF EL PASO DE ROBLES ADOPTING THE 2010 URBAN WATER MANAGEMENT PLAN

WHEREAS, the California Urban Water Management Planning Act ("Act") (California Water Code Sections 10620 et seq.) requires every urban water supplier providing municipal water directly or indirectly to more than 3,000 customers or supplying more than 3,000 acre-feet of water annually to develop an Urban Water Management Plan; and

WHEREAS, the Act requires that an urban water management plan be updated every five years; and

WHEREAS, the City of Paso Robles last updated its Urban Water Management Plan in 2005; and

WHEREAS, a Public Draft 2010 Urban Water Management Plan has been circulated for public review and all comments received have been reviewed and considered; and a properly noticed public hearing was held by the City Council on June 21, 2011, prior to adoption of a Final Urban Water Management Plan, all in compliance with the requirements of the Act; and

THEREFORE, BE IT RESOLVED AS FOLLOWS:

1. The Urban Water Management Plan is hereby adopted and ordered filed with the City Clerk.
2. The Water Resources Manager is hereby authorized and directed to file this Plan with the California Department of Water Resources;

Passed and adopted this 21st Day of June, 2011 by the following vote:

AYES: Steinbeck, Gilman, Picanco
NOES:
ABSTAIN:
ABSENT: Strong, Hamon

Duane Picanco, Mayor

ATTEST:

Caryn Jackson, Deputy City Clerk

THE TRIBUNE
Newspaper of the Central Coast

3825 South Higuera • Post Office Box 112 • San Luis Obispo, California 93406-0112 • (805) 781-7800

In The Superior Court of The State of California
In and for the County of San Luis Obispo
AFFIDAVIT OF PUBLICATION

AD #6943461
CITY OF PASO ROBLES
PUBLIC WORKS

STATE OF CALIFORNIA
ss.
County of San Luis Obispo

I am a citizen of the United States and a resident of the County aforesaid; I am over the age of eighteen and not interested in the above entitled matter; I am now, and at all times embraced in the publication herein mentioned was, the principal clerk of the printers and publishers of THE TRIBUNE, a newspaper of general Circulation, printed and published daily at the City of San Luis Obispo in the above named county and state; that notice at which the annexed clippings is a true copy, was published in the above-named newspaper and not in any supplement thereof – on the following dates to wit; MAY 25; JUNE 1, 2011 that said newspaper was duly and regularly ascertained and established a newspaper of general circulation by Decree entered in the Superior Court of San Luis Obispo County, State of California, on June 9, 1952, Case #19139 under the Government Code of the State of California.

I certify (or declare) under the penalty of perjury that the foregoing is true and correct.

Janet E. Durand
(Signature of Principal Clerk)
DATED: JUNE 1, 2011
AD COST: $166.46

CITY OF EL PASO DE ROBLES
PUBLIC NOTICE

NOTICE OF PUBLIC HEARING OF THE CITY COUNCIL OF THE CITY OF EL PASO DE ROBLES ON THE PROPOSED 2010 URBAN WATER MANAGEMENT PLAN

NOTICE IS HEREBY GIVEN that the City Council of the City of El Paso de Robles (the "City Council") will hold a public hearing on Tuesday, June 21, 2011 at 7:30 p.m. at City Hall located at 1000 Spring Street, Paso Robles, California, to consider and act upon the proposed 2010 Urban Water Management Plan. (the "PLAN")

The hearing will address the following topics under the proposed water management plan:

- Water supply and demand for the City
- Water demand management measures
- Water shortage contingency plan

Copies of the PLAN are available for public review and inspection at the Paso Robles Library, 1000 Spring Street, Paso Robles. It is also available on-line at www.pasowater.com.

Interested persons may submit written comments addressed to Christopher Alakel, Water Resources Manager of the City of Paso Robles, 1000 Spring Street, Paso Robles, Ca, 93446 prior to 5 p.m. on June 17, 2011.

At the time and place noted above, all persons interested in the above matters may appear and be heard.

May 25, June 1, 2011 6943461

CITY OF EL PASO DE ROBLES

"The Pass of the Oaks"

April 22, 2011

Mr. Paavo Ogren
Public Works Director
San Luis Obispo County
919 Palm Street
San Luis Obispo, CA 93401

Re: City of Paso Robles Draft 2010 Urban Water Management Plan
Available for Review

This letter is to notify your organization that the City of Paso Robles has updated its Urban Water Management Plan. A public draft of the 2010 City of Paso Robles Urban Water Management Plan is available for review and comment. The plan is available at the City of Paso Robles Library at 1000 Spring Street, Paso Robles, or the plan can be viewed and downloaded from the City of Paso Robles website at pasowater.com.

Written comments on the plan will be received until 5:00 p.m., June 21, 2011, and may be addressed to Christopher Alakel, Water Resources Manager, 1000 Spring Street, Paso Robles, CA 93446.

Sincerely,

Christopher Alakel
Water Manager

cc: File

CITY OF EL PASO DE ROBLES

"The Pass of the Oaks"

July 15, 2011

California State Library
Government Publications Section
P.O. Box 94237-0001
Sacramento, CA 94237-0001
Attention: Coordinator, Urban Water Management Plans

To Whom it May Concern:

The City of Paso Robles is pleased to provide for your collection the City of Paso Robles 2010 Urban Water Management Plan.

Sincerely,

Christopher Alakel, P.E.
Water Resources Manager
City of Paso Robles

cc: File

CITY OF EL PASO DE ROBLES

"The Pass of the Oaks"

July 15, 2011

Mr. Paavo Ogren
Public Works Director
San Luis Obispo County
919 Palm Street
San Luis Obispo, CA 93401

Dear Mr. Ogren:

The City of Paso Robles is pleased to provide San Luis Obispo County with a copy of the City of Paso Robles 2010 Urban Water Management Plan. An electronic copy of the plan may be downloaded from pasowater.com.

Sincerely,

Christopher Alakel, P.E.
Water Resources Manager
City of Paso Robles

Enclosure
cc: File

Appendix B

Implementation Plan for Water Conservation Best Management Practices

City of Paso Robles

Implementation Plan for Water Conservation Best Management Practices

Conservation Plan Objectives

The overall objective of the City's conservation program is to achieve approximately a 10 percent reduction in total per capita water use by the year 2020. Additionally, programs outlined in this plan are designed to comply with the California Urban Water Conservation Council's (CUWCC) Memorandum of Understanding (MOU), signed by the City in 2010.

SB 7 – 7 requires that cities achieve a 20 percent reduction in total per capita water use by the year 2020. The remaining 10 percent of demand reduction needed to achieve a 20 percent reduction in demand by 2020 is projected to be the result of price elasticity conservation impacts of planned water rate increases over the 2011-2015 period. Increases in average monthly water bills will also encourage people to participate in incentive programs as well as induce customer behavioral changes.

To calculate progress toward the state-mandated reduction of 10 percent by 2015, and 20 percent by 2020, the pre-conservation baseline per capita water use is assumed to 241 gpcd, based on the 10-year average from 1999-2008. Table 1 below shows annual gpcd use rates from 1990 through 2009.

Table 1
Paso Robles Total per Capita Water Use

Year	Average Day Production (MGD)	Population	Total GPCD Use
1990	4.28	18,583	230
1991	4.07	19,750	206
1992	4.20	20,050	209
1993	no data	20,300	no data
1994	4.41	20,400	216
1995	4.63	20,900	222
1996	4.91	21,450	229
1997	5.24	21,650	242
1998	4.63	22,050	210
1999	5.49	22,500	244
2000	5.76	24,450	236
2001	6.00	25,200	238
2002	6.55	25,800	254
2003	6.67	26,856	248
2004	6.66	27,200	245
2005	6.62	28,000	236
2006	6.64	29,027	229
2007	7.25	29,618	245
2008	7.04	29,813	236
2009	5.95	29,950	199

This baseline reflects water use rates prior to mandatory outdoor water use restrictions being implemented in 2009. In order to be in compliance with SB 7, a 10 percent reduction to 217 gpcd would be required by 2015, and a 20 reduction to 193 gpcd by 2020. Estimated water use reductions for individual programs are expressed in this plan in terms of acre-foot per year savings from total annual projected baseline water use for 2015, 2020, and 2025 (or when buildout occurs).

Projected baseline annual demand without conservation is as follows:

2015 – 8776 af/yr
2020 – 10,939 af/yr
2025 – 12,800 af/yr (buildout)

The 2015 and 2020 demands are based on the projected 12,800 af/yr at buildout demand (Baseline demand - Alternative 3, Urban Water Management Plan), phased in from the current demand level of 7,770 af/yr (pre-mandatory conservation). The phase-in is based on the projected percentage of buildout housing units added by 2015 and 2020 (20 % and 63% respectively; source: Kennedy/Jenks Water Rate Study projections, 2009).

Customer Outreach Program

Customer outreach efforts are the cornerstone of the conservation program. Outreach activities provide critical support for the other programs discussed in this plan. As a support activity, no direct water savings are attributed to the program. However, the annual outreach budget of $60,000 per year indicates the importance of having a wide-ranging approach to communicating the need for conservation and how customers can reduce water use through participating in the water conservation programs available in Paso Robles. Outreach efforts include the following:

- Printing and purchases of pre-printed flyers and brochures
- Printing and mailing of materials supporting the mandatory summer peak demand management program.
- Printing and distribution of water bill stuffers and newsletters
- Graphic design costs
- Banners and signage
- Radio and Television advertising
- Workshop costs, video production
- Print advertising (newspapers, magazines)
- Event sponsorship
- California Urban Water Conservation Coalition (CUWCC) membership dues

Projected Water Savings (Benefits) and Costs by Program

Table 2 below lists projected program savings (af/yr) for each existing and potential program element, and the estimated savings (af/yr) and percentage reduction from baseline demand for the years 2015, 2020, and 2025. Estimated savings for existing incentive programs and existing and potential ordinances are based on an assumed number of participants per year or the number of residential units impacted by ordinances per year. Program assumptions and savings calculations are described below. The total conservation program budget, exclusive of full-time staff costs, is $153,000/yr.

Table 2
Projected Conservation Program Savings (af/yr)

Existing Programs (with current funding)	**2015 Savings**	**2020 Savings**	**Buildout 2025 Savings**
Toilet Rebate (BMP 14) @ 150/yr	29.5	59	88.5
Landscape Rebate @ 84/yr	28.8	57	85.5
Residential Audits (BMP1,2) @ 130/yr	17	34	51
2014 HET Toilet State Code	3.9	32.1	66
Landscape Ordinance	47.8	274.5	548.4
Savings Subtotal	127.0	456.6	839.4
Baseline Demand Projection (1)	8,776	10,939	12,800
% reduction from baseline demand	1.4%	4.2%	6.6%
New Programs required by CUWCC, (limited current funding available for CII incentives, and part-time staff only)	**2015 Savings**	**2020 Savings**	**Buildout 2025 Savings**
Et Budgets, CII Landscape (BMP 5)			
CII (BMP (9) (assume 10% red. by 2020)			
Note: Assumes 10% red. From CII by 2020 per CUWCC Req.	133.1	371.7	462.5
Savings Subtotal (Existing + New)	260.1	828.3	1,301.9
% Reduction from baseline demand (existing + new)	3.0%	7.6%	10.2%
Potential New Programs (currently unfunded)	**2015 Savings**	**2020 Savings**	**2025 Savings**
Clothes Washer Rebate (BMP 6)	9.2	20.7	32.2
Retrofit on Resale Ordinance	55.0	110.0	165.0
Fund up to 200 landscape rebates/yr	39.7	78.7	118.0
Savings Subtotal (Exist. + New + Pot.)	364.0	1,037.7	1,617.1
% reduction from baseline demand	4.1%	9.5%	12.6%

Notes:

Calculation of Landscape Ordinance Savings	**2015**	**2020**	**2025**
New Single Family Units	762	2019	3799
New Multi-family Units	245	780	1309
Additional Comm./Ind Demand (AF/YR)	0	591	1275
Projected Savings (SF + MF)	47.8	132.7	242.4
Projected Savings (New Comm/Ind.)	0	141.8	306.0
Total Landscape Ord. Savings (AF/YR)	47.8	274.5	548.4
	2015	**2020**	**2025**
Total Estimated CII Demand (Non-res demand) no conservation (AF/YR) (2)	2662	3717	4625
(based on zoning-based demand projection)			

(1) Based on the % of new housing units projected by 2015, and 2020, applied to the buildout zoning-based demand (no conservation)
(2) Based on the % of buildout housing units added by 2015, and 2020

Conservation Programs and Projected Water Savings (Benefits) and Costs

Existing Programs (as of August, 2010)

Each existing program element is described, including projected water savings and program direct costs. Staffing, administrative, and marketing costs for the incentive programs are discussed in a separate section. It is assumed that vehicles for full and part-time staff are provided from existing city rolling stock.

1) HET Toilet Rebate Program (BMP 14)

Program Description: This voluntary program, begun in February, 2010, provides a rebate of $125 per toilet for installation of HET Toilets (1.28 gpf) or dual flush toilets replacing 3.5 gpf (or higher) models. CUWCC requires that cities achieve as many toilet installations each year as would a retrofit-on-resale ordinance. There are approximately 5,900 pre-1992 single family homes in Paso Robles. A review of single family home sales records for pre-1992 homes in Paso Robles from 2004-2008 indicates the average annual sales of these homes were 212 per year. At this sales rate, it would take approximately 25 years to retrofit all pre-1992 homes through a retrofit-on-resale ordinance. However, currently the number of home sales is significantly less due to the slow economy. Based on participation rates in the first four months of the voluntary program (during which 30 rebates were issued), achieving 200+ toilet rebates annually on a voluntary basis will be difficult to achieve in the near-term. Based on the current rate of participation, it is assumed that 100 toilets per year could be achieved. Increased marketing efforts will be made to increase participation, and voluntary participation may increase over the next five years as water rates increase, particularly if the economy rebounds and more home remodeling occurs. Projected water savings and program costs are therefore projected at an average of 150 rebates per year. Increased participation through a retrofit-on-resale ordinance is discussed below under potential new programs.

Projected Water Savings – The projected water savings for each year the voluntary program is in place is 5.9 af/yr (12,800 gal/yr/toilet X 150 toilets) = 1,920,000 gal/yr

Annual Program Costs - $18,750/yr (150 rebates x $125)

2) Water Sense Specifications (WSS) for Residential Development

Program Description: In 2014, a new state law will require 1.28 gal/flush toilets in all new residential and commercial construction. This is a no-cost program for the City that will reduce per capita consumption in future development. In addition, the California Green Building Standards Code (Title 24, Part II) , effective January 1, 2011 , now requires fixtures in new development to meet Water Sense specifications. Paso Robles adopted this code in late 2010.

Projected Water Savings - Assume 4.32 gpd savings per residential unit going from a 1.6 gpf toilet to a 1.28 gpf model (5 flushes X 2.7 pph x 365 days x 0.32 gal/flush). Assume by 2025 buildout, approximately 5,054 new housing units will be constructed according to this requirement based on 16,287 total housing units). Water savings for each of the planning years are estimated by backing into the proportional savings for the planning years as development occurs.

Annual Program Costs - No additional water conservation program costs.

2015 – 299 new units, savings = 3.9 af/yr
2020 – 2457 new units, savings = 32.1 af/yr
2025 – 5054 new units, savings = 66.0 af/yr

3) Landscape Rebate (Turf buy-back) Program (Not a CUWCC program)

Program Description: There is no CUWCC requirement for this incentive program. However, the turf rebate program, initiated in 2010, is an effective way of incentivising customers to replace turf lawns with drought-tolerant Mediterranean landscapes on drip irrigation. This program is also effective in reducing peak summer water use. A $0.50 per square foot rebated is provided to residential or non-residential customers for turf converted to drought-tolerant landscaping, to a maximum of $500. The current rebate budget is $50,000 per year, less the projected toilet rebate spending of $18,750/yr., leaving $31,250 available for turf rebates. It is assumed, based on the program results to date, that the average square footage and rebate provided will be 740 square feet and $370 respectively. At this level of turf replacement, 84 rebates per year could be funded.

Projected Water Savings - For each rebate provided, assume water use on 740 sq. ft. (0.017 acres) will be reduced from 5 af/ac to 1 af/ac, for an annual savings of 22,000 gal/home/yr. Total annual savings for 84 rebates/yr = 5.7 af/yr for each year the program is in place.

Annual Program Cost: Annual program costs are $31,250 (84 participants X $370 avg.)

4) Home Water Survey Program (Residential Audits) (BMPs 1,2)

Paso Robles implemented a home water survey program in February, 2010. This voluntary program provides a free in-home survey primarily to residential customers, though it is available to commercial customers as well. During the first ten months of the program in 2010, approximately 140 residential audits were completed. The program was marketed with bill inserts and bill messages, web-based advertising, direct mail, and paid advertising.

The CUWCC memorandum requires that cities perform audits on 1.5 percent of single-family residential customers each year to meet a target of 15 percent of customers within 10 years. The current single family customer count of approximately 8,700 homes would require surveys to be performed on 130 homes per year. Higher water rates planned for phased-in over the 2011-2015 period are expected to help increase customer participation to maintain this level of participation. Increased marketing efforts, including direct mail and phone follow-up to targeted customers, and paid advertising, will also help maintain customer participation levels.

Projected Water Savings – Estimated savings of 8,500 gal./yr/acct. (based on CUWCC guidelines and other industry studies) X 130 accounts/yr = 3.4 ac/yr each year the program is in place .

Annual Program Costs:

- Materials - $15 per account x 130 accounts (for showerheads, faucet aerators, toilet flappers, shower coaches, and literature) = $1,950 per year.
- Marketing - $5,000 per year for direct mail, bill inserts, and print ads (included in Outreach budget of $60,000 per year).
- $20,000 per year in survey/audit staffing cost ($21/hr loaded cost x 952 hours)

5) Paso Robles Water Efficient Landscape Ordinance (Existing) (Not a CUWCC BMP, though required by state law)

The City's water-efficient landscape ordinance, enacted in December 2009, largely mirrors the state's model landscape ordinance, but differs in some respects. In addition to landscape design requirements and water budgets for large landscapes, water conservation savings will also come from restrictions on the amount of turf landscaping in new development. Turf in new residential and commercial development is limited to the following:

- Single Family Residential – front yard limited to 25% of landscaped area
- Multi-family residential limited to 20% of landscaped area
- Non-residential development limited to 10% of landscaped area

Projected Water Savings - (See Appendix 1 for detailed savings calculations and assumptions)

- Estimated savings per new single family residential unit - 15,640 gal/yr/home.
- Multi-family residential per unit water use assumed is projected to be reduced by 17 percent, or 14,938 gal./housing unit.
- Commercial/industrial account savings were estimated at 24 percent of total commercial/industrial sector use, at 24 percent.
- Total estimated savings calculations for projection years are shown in notes on Table 2.

CUWCC BMP Programs Planned for Phased Implementation

6) CII Programs (Commercial/Industrial/Institutional)
(ET-based budgets for CII Landscapes (formerly BMP 5) and CII Interior Programs)

6a) Landscape Programs

Accounts with Dedicated Irrigation Meters - CII landscape programs, as defined by CUWCC, require that Eto-based water budgets be developed and assigned to CII customers. For accounts with dedicated irrigation meters (such as parks, schools, landscape medians, and residential common areas), water budgets for at least 9 percent of accounts must be developed each year. Over a ten-year period, 90 percent of accounts in this category must receive this assistance. As of 2011, the City lacks sufficient staff to implement this program. This section describes an implementation plan for meeting this BMP.

The strategy to be used in implementing water budgets for dedicated irrigation meters will be to first target parks (10 parks total) and schools that have dedicated meters (12 schools total, many of which may have dedicated meters). There are also approximately 100 Landscape and Lighting (L and L) irrigation meters that supply water to landscape parkways. Multiple L and L meters may serve one stretch of roadway and could be combined into one account for the purpose of doing landscape budgets. Parkways will be prioritized for water budgets based on the highest summertime water use. Assuming a total of approximately 100 dedicated meters, 9 water budgets per year would need to be prepared. CUWCC requires that accounts receiving water budgets be notified through the monthly bill of their water use in relation to the annual budget.

Water audits can be performed through a combination of using the Cachuma Resource Conservation District Mobil Irrigation Lab service and part-time staff. The Cachuma RCD Mobile Lab provides a no-cost service that tests irrigation system uniformity, identifies potential

improvements to irrigation systems, and develops water budgets for the facility. Part-time City staff (less than ½ time), is budgeted and available on a limited basis to conduct landscape surveys and develop water budgets for CII users. A start at this program can be made in late 2010, focusing on parks and school sites initially.

Projected Water Savings – The projected water savings for this program are discussed below in combination with the savings associated with CII Retrofit programs.

Annual Program Costs – An additional full-time Conservation Assistant postion will be required to implement this program. The estimated annual cost of this position in $75,000, including benefits.
Mixed-Use Landscape Meters - For CII accounts with mixed-use meters, a strategy will be developed to target and market large landscape water use surveys. The CUWCC performance standard is that water use surveys must be completed for 1.5 percent of all CII mixed-use accounts. This would require that landscape water use surveys be completed for approximately 10 accounts per year of the 700 commercial meters currently served.

6b) CII Interior Retrofit Programs (formerly BMP 9)

The CUWCC Best Management Practices strategy for CII interior use is to implement retrofit measures from a list of measures with well-documented water savings. These measures may include but are not limited to industrial process water use reduction, industrial laundry retrofits, car wash recycling systems, and water-efficient commercial dishwashers. Other items on the CII demonstrated Savings Measure List are:

- HET Toilets (commercial customers are currently eligible for up to 2 toilets rebates per account)
- High-Efficiency Urinals, Ultra-Low Volume Urinals, and Zero consumption urinals.
- Commercial High-Efficiency- Single Load Clothes Washers
- Cooling Tower Conductivity Controllers
- Cooling Tower Ph Controllers
- Medical Equipment Steam Sterilizers
- Water-Efficient Ice Machines
- Pressurized Water Brooms
- Dry Vacuum Pumps

A rebate program to encourage the installation of these items by commercial customers is recommended. An annual pool of rebate money would be made available for the above fixtures and technologies. The program would be marketed to all commercial accounts on a twice-a-year basis using direct mail to facility managers. Rebate applications would be evaluated on a case-by-case basis based on estimated water savings and cost factors.

Projected Water Savings – Projecting water savings from the CII program is difficult. The overall CUWCC Memorandum target savings for CII landscape and interior programs combined is a 10 percent reduction from projected pre-conservation non-residential demand, achieved by 2020 (CUWCC requirement). For this plan, it is assumed savings will be phased-in and achieve a 5% reduction in CII demand by 2015 and a 10 % reduction by 2020. However, meeting this target will require the addition of a full-time staff person for conducting large turf and commercial facility audits, and funding for a CII incentive program. Additional duties of full-time staff would include commercial and residential rebate processing, residential water surveys,

and record keeping. Water savings calculations in Table 2 are based on the percentage reduction from overall CII baseline demands for the projection years shown on Table 2.

Annual Program Costs - Annual costs for this program will be developed in 2012-13, after new water rates are implemented. Estimated program implementation date is calendar year 2013.

7) High-Efficiency Clothes Washer Rebate (formerly CUWCC BMP 6)

This is a required element by CUWCC that is currently not funded. However, PG&E currently provides a rebate of $50 per high efficiency washer purchased. The City's conservation website currently directs customers with a direct link to the PG&E website. Washer models must meet the following qualifications to qualify for the PG&E rebate:

- Clothes washer must be a **Consortium for Energy Efficiency (CEE) Tier 3 model** only.
- Clothes washer must have a Modified Energy Factor (MEF) of 2.2 or greater.
- Clothes washer must have a Water Factor (WF) of 4.5 or less.

CUWCC requires that cities also provide rebates for washing machines that meet an average water factor value of 5.0 or less, or the EPA Watersense value if it is less than 5.0.

Program Assumptions: Assume 5,086 gal/yr. savings per rebate (per CUWCC data) and 150 participants per year, based on rebate of $100 per appliance. This program will be marketed with bill inserts, web-based marketing, and paid advertising.

Projected Water Savings - 2.3 af/yr. for each year the program is in place

Annual Program Cost: $15,000/yr. (150 x $100 rebate, currently unfunded)

7) Retrofit-on-Resale Ordinance (Not a CUWCC BMP)

Many cities in southern and northern California now require the retrofit upon resale of homes that do not have 1.6 gallon/flush toilets, low-flow showerheads, and faucet aerators. On the Central Coast, San Luis Obispo, Arroyo Grande, and several south County areas (Los Osos and Nipomo) have retrofit-on-resale ordinances in place. Such an ordinance would apply to approximately 5,900 pre-1994 single family homes in Paso Robles (or a high percentage of these homes that have not been remodeled since 1994), and approximately 2,360 multi-family units.

A review of single family home sales records for existing pre-1992 homes in Paso Robles from 2004-2008, indicates an average annual sales of 212 pre-1992 homes. At this rate, it would take approximately 25 years to retrofit all pre-1992 homes through a retrofit-on-resale ordinance. If implemented, sellers of homes would be required to provide a form to the City stating toilets, showerheads, and aerators, meet low-flow standards. When the buyer applies for a new water service, Water Division staff, at the time of service turn-on, would inspect the fixtures for compliance with requirements. Although the ordinance would require that 1.6 gallon toilets are in-place, the water savings calculated for the ordinance assumes sellers would take advantage of the City's rebate program and install 1.28 gallon toilets. It is assumed the City would increase the budget for the toilet rebate program to provide toilet rebates for the homes and businesses required to be retrofitted each year.

Projected Water Savings

Single Family Homes - Assume a total of 200 pre-1992 single family homes are sold each year and are subject to the ordinance. Assume 20 (10 percent) of these homes have already been retrofitted, or will have been recently been retrofitted through the voluntary program. Assume the remaining 180 homes per year are retrofitted through implementation of the ordinance. Water Savings = 15,653 gal./home/yr, based on replacement of a 4 gallon avg. with a 1.28 gal/flush model and additional savings of 2.9 gpcd for shower and aerator savings. Total savings = 180 homes X 15,653 gallons = 8.6 af/yr for each year program is in place.

Multi-family Units - Assume a total of 50 pre-1994 multi-family units are sold each year) that must retrofit (2% of the total units. Savings = 50 x 15,653 gallons/yr = 2.4 af/yr for each year the program is in place.

Total water savings for Single and Multi-family units = 11.0 af/yr for each year program is in place.

Annual Program Cost

To provide up to 2 toilet rebates for all single family and multi-family residential units projected annually to be retrofitted per the ordinance would require $57,500 (230 housing units x 2 toilets = 460 toilet rebates X $125 per toilet). This funding would be in addition to the $18,750 budget currently budgeted for voluntary toilet retrofits.

Water Conservation Program Summary

The total projected annual water savings and annual cost for each conservation program are shown in Table 2. These estimated savings are independent of water use reductions related to price elasticity effects of planned water rate increases. The future impact on customer water use of planned rate increases is difficult to project with a high degree of accuracy at this time. However, using an average price elasticity factor of 0.2 applied to the projected year-five rate increase of 62 percent for the average single family residential user (13 units monthly average), yields an average price-induced decrease in water use of approximately 12 percent by 2015.

If estimated price-induced conservation savings are added to the projected year 2020 savings of 9.5% for BMP programs and non-BMP programs (includes current and additional programs) it is projected that total savings will meet the SB 7 target of a 20 % decrease in overall per capita water use by the year 2020. If price induced savings are greater than the estimated 12 percent, additional conservation programs beyond those currently budgeted may not be needed to reach the 20 percent conservation target. Conservation program needs will be re-evaluated in future years after the conservation impacts of rate increases are better understood, as well as the upward pressure on customer water use from the discontinuation of mandatory summertime irrigation restrictions after the Lake Nacimiento water supply is brought on-line (projected in 2013).

Appendix 1
Landscape Ordinance Water Savings

MEMORANDUM

TO: **File**
FROM: **Keith Larson, Water Conservation Manager**
SUBJECT: **Paso Robles Landscape Ordinance – Calculated Water Savings in New Development versus Pre-Ordinance Development**
DATE: **December 1, 2009**

The state's model water efficient landscape ordinance does not specify the level of water use reduction the ordinance is expected to achieve. In developing the City's landscape ordinance approach, a target reduction of 20 percent was chosen (new development versus pre-ordinance development). This target aligns with the City and state goal of achieving an overall per capita water use reduction of 20 percent by the year 2020. The ordinance's limitations on turf in new development are the primary mechanism for achieving these reductions. The ordinance requirements will complement the conservation impact of the City's continuing outreach and education on efficient irrigation practices, use of climate-appropriate landscape, and the future conservation impact of water rates.

Water Use Savings Summary

Irrigation savings were estimated for each major water use sector using 2008 use as a baseline. The percentage savings was calculated based on assumptions regarding the percentage of turf versus low-water-use landscaping in existing (pre-ordinance) development, and the percentage following ordinance implementation. Irrigation water use savings from turf area reduction was expressed as a percentage for each water use sector. Then those savings were expressed as a percentage of total water use for the sector. Finally, savings for each sector are expressed as a percentage of annual total City water usage and totaled. The total projected water savings in new development, versus the same development without the turf limitations is 19 percent. The projected savings is distributed among water use sectors as follows:

Sector	Outdoor Use Savings	Total Savings Within Sector	Sector Contribution to Reduction in New Development Use
Single Fam. Res.	17.9%	9.6%	5.6%
Multi-Family Res.	57.0%	17.0%	1.6%
Landscape/Lighting	76.0%	76.0%	9.4%
Commercial/Ind.	59.0%	24.0%	4.0%
Total			20.6%

Additional savings will occur from: 1) improvements in irrigation efficiency on new landscapes 1 acre and larger that are required to install weather-based irrigation controllers, and 2) continuing outreach on efficient irrigation practices, and 3) price elasticity impacts of future water rates. The

estimated reductions in outdoor water use for all sectors exceed the estimated reduction that would result from implementing the state's model landscape ordinance without turf limitations.

Estimated Water Savings by Sector

Water savings was estimated based on the assumption that 5 feet of irrigation water (60 inches of water) is applied to turf landscaping annually on average, and 12 inches is applied to areas planted in low-water-use drought tolerant plant material on drip irrigation.

Single Family Residential

Avg. existing front yard turf percentage = 57%
Avg. existing front yard landscapable area – 1650 s.f.
Avg. existing turf area = 940 s.f.
Reduce turf to 25 % of 1650 s.f. or 412 s.f.; a reduction of 528 s.f., or 0.012 acres
Savings = 4 af/yr x 0.012 acres = 15,640 gal./yr
2008 avg. existing lot residential use = 0.5 af or 162,925 gal/yr
Annual avg. interior use = 75,700 gal/yr
Avg. annual exterior use = 87,213 gal/yr
Savings as percentage of exterior use = 17.9%
Savings as percentage of total single family use = 9.6%
Savings as percentage of total City use in new development = 5.6%

Multi-Family Residential

Avg. MF per unit usage in 2008 = 87,875 gal/yr
Interior usage = 61,685 gal/yr (based on 2.6 pph and 65 gpcd)
Landscape usage = 26,190 gal/yr or 30% of total per unit use
Assume 80% of landscape in existing development is turf and 20 percent non-turf
Current weighted average irrigation use = (0.80 x 5 af) + (0.20 x 1 af) = 4.2 af/ac/yr
After ordinance – weighted average irrig. use = (0.2 x 5 af) +(0.8 x 1) = 1.8 af/ac/yr
Irrigation use savings percentage = 57%
Savings as percentage of total MF residential use = 0.57 x 0.30 = 17%

Landscape and Lighting (Street Landscaping)

Assume landscaping is now 80 percent turf, 20 percent non-turf
Ordinance would require all L and L area to be non-turf
Current weighted irrigation use = (0.8 x 5 af/yr) + (0.2 x 1 af/yr) = 4.2 af/yr
After ordinance – weighted average irrigation use = 1.0 x 1 af/yr = 1 af/yr
Savings percentage (all irrigation) = 76%

Commercial / Industrial

Assume current landscape mix is 60% turf, 40% low-water-use.
Current weighted avg. irrigation use = (0.6 x 5 af/ac) + (0.4 x 1 af/ac) = 3.4 af/ac
After ordinance – weighted avg. use = (0.1 x 5 af/ac) + (0.9 x 1 af/ac) = 1.4 af/ac
Outdoor use savings percentage therefore = 2/3.4 or 59 %
Outdoor commercial water use is approximately 41% of total annual commercial use based on difference between February and July commercial account use.
Overall reduction in commercial use = 0.41 x 0.59 = 24%

Appendix C

Ordinance No. 956 N.S. Adopting a Water Conservation and Water Shortage Contingency Plan

ORDINANCE NO.956 N.S.

AN URGENCY ORDINANCE OF THE CITY OF EL PASO DE ROBLES TO ADD CHAPTER 14.02 TO THE MUNICIPAL CODE OF THE CITY OF EL PASO DE ROBLES ADOPTING A WATER CONSERVATION AND WATER SHORTAGE CONTINGENCY PLAN AND DECLARING THAT THIS IS AN URGENCY ORDINANCE NECESSARY FOR THE IMMEDIATE PRESERVATION OF THE PUBLIC HEALTH, SAFETY AND WELFARE

WHEREAS, a consistent and minimum reliable supply of potable water is essential to the public health, safety, and welfare of the people and community of the City of El Paso De Robles; and

WHEREAS, Article X, Section 2 of the California Constitution declares that the general welfare requires that water resources be put to beneficial use, that waste or unreasonable use or unreasonable method of use of water be prevented, and that conservation of water be fully exercised with a view to the reasonable and beneficial use thereof; and

WHEREAS, the City of El Paso De Robles water production capacity is highly dependent on factors such as precipitation and local and regional demands for groundwater as its two current existing sources of water are the Paso Robles Groundwater Basin and the City's permitted allocation from the Salinas River; and

WHEREAS, the California State Water Resources Control Board ("SWRCB") has declared that the Salinas River is fully allocated, and the City's permit limits the maximum annual pumping from the Salinas River underflow to 4,600 acre feet per year ("AFY"); and

WHEREAS, due to current statewide drought conditions, the City's underflow wells are only producing at 69% of historic levels, and SWCRB has indicated it may restrict underflow pumping due to current drought conditions and has stated that water agencies should adopt conservation efforts to reduce urban water use by 20%; and

WHEREAS, the City and the County of San Luis Obispo (the "County") recently commissioned an update of the 2005 Groundwater Basin Study (*Evaluation of Paso Robles Groundwater Basin Pumping*, Todd Engineers May 2009) that concludes total groundwater pumping has increased by 5,516 AFY between 2000 and 2006, an average annual increase of 919 AFY. Assuming no water management actions, (including delivery of Nacimiento Project Water), this rate of increase would result in overdraft by 2017; and

WHEREAS, the 2009 Updated Basin Study also finds that groundwater basin pumping exceeds 90% of the safe annual yield; and

WHEREAS, the City and County are both parties to an agreement with a group representing a number of agricultural groundwater basin pumpers, known as "PRIOR," the purpose of which is to avoid expensive and lengthy groundwater rights litigation by cooperating in groundwater basin monitoring and water management; and

WHEREAS, the City's weekly demands for water historically have increased drastically in the summer months, rising from approximately 3.5 million gallons per day ("GPD") to approximately 12.7 GPD in July, an increase of 330%; and

WHEREAS, despite City efforts to rehabilitate wells, install new wells and recommission standby wells, the amount of water produced by those wells during the summer months has declined significantly in the past few years; and

WHEREAS, in 2004, City wells produced roughly 12.7 GPD, in the summer of 2008, production dropped to 11.7 MGD, and in 2009, water production is expected to decline to 10.4 MGD; and

WHEREAS, the City's water storage capacity is approximately 12 MGD, roughly 50% of which is allocated for emergency and fire-fighting storage capacity; and

WHEREAS, such fire-fighting capacity would be depleted within three days of prolonged hot weather conditions, thereby creating a potential threat to public health and safety; and

WHEREAS, it is in the City's best interest to enact prudent water demand management measures immediately to avoid water shortages; and

WHEREAS, California Water Code section 375 authorizes water suppliers to adopt and enforce a comprehensive water conservation program to reduce water consumption and conserve supplies after holding a public hearing; and

WHEREAS, the adoption and enforcement of a water conservation and supply shortage program is necessary to manage the City of El Paso de Robles' water demand and supply to minimize the effects of water shortages within Paso Robles. Such program is essential to ensure a reliable minimum supply of water for the public health, safety, and welfare.

WHEREAS, based on all of the above, as one measure to help ensure that the City will have adequate water supplies during the coming summer months and into the future, the Council finds and determines that the adoption of a water conservation and water shortage contingency plan is necessary.

NOW, THEREFORE, THE CITY COUNCIL OF THE CITY OF EL PASO DE ROBLES DOES HEREBY ORDAIN AS FOLLOWS::

SECTION 1. The City Council of the City of El Paso De Robles, at its regular meeting of May 19, 2009, considered as one of its items of business this Ordinance to be introduced in accordance with Government Code Section 36937(b). The City Council hereby finds and determines that, based on all of the facts described above, the staff reports and the testimony received during a public hearing on this Ordinance, all of which are incorporated herein, the adoption of a water conservation and water shortage contingency plan is vitally necessary to help preserve and protect the public health, safety and welfare of the City and its residents.

SECTION 2. Chapter 14.02 is hereby added to Title 14 of the Municipal Code of the City of El Paso de Robles as follows:

CHAPTER 14.02

WATER CONSERVATION AND WATER SHORTAGE CONTINGENCY PLAN

14.02.010 Declaration of Necessity and Intent

A. This Chapter establishes certain mandatory and permanent water management requirements necessary to conserve water, enable effective water supply planning, assure reasonable and beneficial use of water, prevent waste of water, prevent unreasonable use of water, prevent unreasonable methods of use of water within the City of El Paso de Robles service area in order to assure adequate supplies of water to meet the needs of the public, and further the public health, safety, and welfare, recognizing that water is a scarce natural resource that requires careful management not only in times of drought, but at all times.

B. This Chapter also establishes regulations to be implemented during times of declared water shortages, or declared water shortage emergencies. It establishes four levels of actions to be implemented in times of shortage, with increasing restrictions on water use in response decreasing water supply or production capabilities.

C. Level 1 Water Supply Shortage measures are voluntary and will be reinforced through local and regional public education and awareness measures. Levels 2 through 4 Water Supply Shortage conditions mandate increasingly restrictive measures in order to attain escalating conservation goals. Those City water customers who violate the measures imposed under a Condition of Level 2 through Level 4 are subject to criminal, civil, and administrative penalties and remedies as provided in Chapter 1 of this Code.

14.02.020 Application

A. This Chapter applies to any *customer* in the use of any water provided by the City of El Paso de Robles, including customers located outside the City.

B. This Chapter is intended solely to further the conservation of water. It is not intended to implement or replace any provision of federal, state, or local statutes, ordinances, or regulations relating to protection of water quality or control of drainage or runoff.

C. The provisions of this Chapter do not apply to uses of water necessary to protect public health and safety or for essential government services, such as police, fire and other similar emergency services.

D. Nothing in this Chapter 14.02 is intended to affect or limit the ability of the City Manager or his designee to declare and respond to an unforeseeable disaster or water emergency such as an earthquake, or other major disruption in the water supply, pursuant to the general laws of the City or other provisions of this Code.

14.02.030 Definitions

The following words and phrases whenever used in this Chapter 14.02 will have the meaning defined in this section:

A. Customer means any person, corporation, public or private entity, public or private association, public or private agency, government agency or institution, school district, college, university, or any other user of water provided by the City of El Paso de Robles.

B. Days are defined as calendar days, unless otherwise indicated.

C. Water Conservation means the efficient management of water resources for beneficial uses, preventing waste, or accomplishing additional benefits with the same amount of water.

D. Condition means a declared water supply shortage condition, which may be at Level 1, Level 2, Level 3 or Level 4, as described in this Chapter 14.02.

14.02.040 Mandatory Minimum Water Conservation Requirements – Prohibition Against Waste

The following water conservation requirements shall be in effect at all times and are permanent. Violations will be considered waste and an unreasonable use of water and are subject to penalties.

A. **No Excessive Water Flow or Runoff:** Watering or irrigating of any lawn, landscape or other vegetated area in a manner that causes or allows excessive water flow or runoff onto an adjoining sidewalk, driveway, street, alley, gutter or ditch is prohibited.

B. **No Overfilling of Swimming Pools and Spas:** Overfilling of a swimming pools and spas such that overflow water is discharged onto an adjoining sidewalk, driveway, street, alley, gutter or ditch is prohibited.

C. **No Washing Down Hard or Paved Surfaces:** Washing down hard or paved surfaces, including but not limited to sidewalks, walkways, driveways, parking areas, tennis courts, patios or alleys, is prohibited except under the following conditions:

1. To alleviate safety or sanitary hazards, and then only by use of a hand-held bucket or similar container, a hand-held hose equipped with a positive self-closing water shut-off device.

2. When a low-volume, high-pressure cleaning machine or a low-volume high-pressure water broom is used.

3. All wash-down activities must comply with all state or local regulations pertaining to discharges to the City's storm drain system.

D. **Obligation to Fix Leaks, Breaks or Malfunctions:** Excessive use, loss or escape of water through breaks, leaks or other malfunctions in the customers' plumbing or distribution system for any period of time after such escape of water should have reasonably been discovered and corrected and in no event more than seven days after written notification by the City of El Paso de Robles, is prohibited.

E. **Re-circulating Water Required for Water Fountains and Decorative Water Features:** Operating a water fountain or other decorative water feature that does not use re-circulated water is prohibited.

F. **Limits on Washing Vehicles:** Using water to wash or clean a vehicle, including but not limited to any automobile, truck, van, bus, motorcycle, boat or trailer, whether motorized or not is prohibited, except by use of a hand-held bucket or similar container or a hand-held hose equipped with a positive self-closing water shut-off nozzle or device. This subsection does not apply to any commercial car washing facility.

G. **Commercial Lodging Establishments Must Provide Guests Option to Decline Daily Linen Services:** Hotels, motels and other commercial lodging establishments must provide customers the option of not having towels and linen laundered daily. Commercial lodging establishments must prominently display notice of this option in each bathroom using clear and easily understood language.

H. **No Installation of Single Pass Cooling Systems:** Installation of single pass cooling systems is prohibited in buildings requesting new water service.

I. **No Installation of Non-Recirculating Systems in Commercial Car Wash and Laundry Systems:** Installation of non-recirculating water systems is prohibited in new commercial conveyor car wash and new commercial laundry systems.

J. **New or Remodeled Restaurants Required to Use Water Conserving Dish Wash Spray Valves:** All new or remodeled food preparation establishments, such as restaurants or cafes, are prohibited from using non-water conserving dish wash spray valves.

K. **Water Served Only Upon Request:** Restaurants and other food establishments will only serve water upon request.

14.02.050 Level 1 Water Supply Shortage – Voluntary Reductions

A. The City Council or, in the event prompt action is necessary, the City Manager, may declare a Level 1 Water Supply Shortage condition (a "Level 1 Condition") when there is a reasonable probability, due to a projected imbalance in available water supply and projected peak demand, that there will be a supply shortage and that a consumer demand reduction of up to 10 percent is needed in order to ensure that sufficient supplies will be available to meet anticipated demands. Upon such declaration, the City Manager or his designee shall take the necessary actions to implement the voluntary Level 1 Condition conservation practices identified in this Chapter. In the event a Level 1 Condition has been declared by the City Manager, the City Council shall consider the ratification of such declaration at its next regularly scheduled meeting or at a special meeting called for such purpose.

B. During the period of a declared Level 1 Condition, the City of El Paso de Robles will increase its public education and outreach efforts to increase public awareness of the need to implement the following water conservation practices.

1. Irrigation of residential and commercial landscapes, including golf courses, parks, school grounds and recreation fields, before 9 a.m. and after 7 p.m. except for renovation or repair of the irrigation system with an operator present.

2. Repair or prevention of all water leaks upon discovery or within five days of notification by the City of El Paso de Robles.

3. Use of recycled, non-potable, or water imported from outside City limits for construction purposes.

14.02.060 Level 2 Water Supply Shortage – Mandatory Reductions

A. The City Council, or in the event prompt action is necessary, the City Manager, may recommend and declare a Level 2 Water Supply Shortage condition (a "Level 2 Condition") when there is a reasonable probability, due to a projected imbalance in available water supply and projected peak demand, that there will be a supply shortage and that a consumer demand reduction of up to 20 percent is required in order to ensure that sufficient supplies will be available to meet anticipated demands. Upon the declaration of a Level 2 Condition, the City Manager or his designee shall take the necessary actions to notify the public and implement the mandatory Level 2 Condition conservation practices identified in this Chapter. In the event a Level 2 Condition has been declared by the City Manager, the City Council shall consider the ratification of such declaration at its next regularly scheduled meeting or at a special meeting called for such purpose.

B. During the period of a declared Level 2 Condition, all water customers shall be required to comply with all Level 1 Condition measures, set forth in Section 14.020.050, and also shall comply with the following conservation measure:

1. All landscape irrigation shall be limited to no more than three assigned days per week and on an every other day schedule established and posted by the City.

C. At its discretion, the City may suspend the issuance of new hydrant meters and/or recall all outstanding meters in accordance with the City's existing Hydrant Meter Rental Agreement.

D. The City Manager may recommend and, upon resolution of the City Council, implement a water allocation per customer account served by the City of El Paso de Robles, and a schedule of per unit penalty surcharges for use exceeding the water allocation. If the City Council adopts or modifies water allocations, the City Manager will post notice of the water allocation prior to the effective date(s). Following the effective date(s) of the water allocation as established by the City Council, any customer that uses water in excess of the allocation will be subject to a penalty surcharge for each billing unit of water in excess of the allocation. The per unit penalty surcharge for excess water usage will be in addition to any other remedy, penalty, or fine that may be imposed for violation of this Chapter. At the City's discretion, the water conservation measures required under Level 1 and Level 2 conditions may be suspended during the period a water allocation is in effect.

14.02.070 Level 3 Water Supply Shortage - Critical Condition

A. The City Council or, in the event prompt action is necessary, the City Manager, may recommend and declare a Level 3 Water Supply Shortage condition (a "Level 3 Condition") when there is a reasonable probability, due to a projected imbalance in available water supply and projected peak demand, that there will be a supply shortage and that a consumer demand reduction of up to 30 percent is required in order to ensure that sufficient supplies will be available to meet anticipated demands. Upon declaration of Level 3 Water Supply Shortfall, the City Manager or his designee shall take the necessary actions to implement the mandatory Level 3 Condition conservation practices identified in this Chapter. In the event a Level 3 Condition has been declared by the City Manager, the City Council shall consider the ratification of such declaration at its next regularly scheduled meeting or at a special meeting called for such purpose.

B. During a the period of a declared Level 3 Condition, all water customers shall comply with all Level 1 Condition and Level 2 Condition water conservation measures and shall also comply with the following additional mandatory conservation measures:

1. All landscape irrigation shall be limited to no more than two assigned days per week on a schedule established and posted by the City Manager or his designee.

2. Filling or re-filling of ornamental lakes or ponds is prohibited except to the extent needed to sustain plants or animals that have been actively managed within the water feature prior to the declaration of a Level 3 Condition.

3. All water leaks, breaks or other plumbing malfunctions shall be repaired upon discovery or within forty-eight hours of notification by the City of El Paso de Robles, with the exception of rental properties, which shall have up to seventy-two hours to repair interior unit leaks, in order to comply with state laws regarding the provision of notice to tenants.

4. Using water to wash vehicles, whether motorized or not, is prohibited except at commercial car washing facilities.

5. Washing down hard or paved surfaces, including but not limited to sidewalks, walkways, driveways, parking areas, tennis courts, patios or alleys, is prohibited except under the following conditions:

a. To alleviate safety or sanitary hazards, and then only by use of a hand-held bucket or similar container, a hand-held hose equipped with a positive self-closing water shut-off device, a low-volume, high-pressure cleaning machine or a low-volume high-pressure water broom.

C. Upon the declaration of a Level 3 Condition, new potable water services, temporary or permanent water meters, and statements of immediate ability to serve or provide potable water service (including, but not limited to, will serve letters, certificates, or letters of availability) will be allowed only under the circumstances listed below. This provision does not preclude the resetting or turn-on of meters to provide continuation of water service or to restore service that has been interrupted.

1. A valid building permit has been issued for the project; or

2. The project is necessary to protect the public's health, safety, and welfare; or

3. The applicant provides substantial evidence satisfactory to the City Manager or his designee of an enforceable commitment that the new water demands for the project will be offset prior to the provision of new water meter(s). The applicant's offset program must be approved by the City's Water Manager. Such offsets may be in the form of additional water conservation measures, the provision of recycled water use in place of existing potable water demands (if available), or other such offsets developed and approved by the City Manager or his designee. To obtain approval, the applicant's plan must demonstrate that the development will not increase the demand on the City's water system.

During the period of a Level 3 Condition, the expiration dates of approved tentative maps and related entitlements for such development projects shall be tolled until such time as the Level III Condition has improved to a Level II Condition or better. Notwithstanding the foregoing, an applicant with an approved tentative map and related entitlements may choose to proceed with development under the conditions set forth in subsection c.3., above.

D. Upon the declaration of a Level 3 Condition, the City will suspend consideration of any annexations to its service area. This subsection does not apply to boundary corrections and annexations that will not result in any increased use of water.

E. At its discretion, the City may suspend the issuance of new hydrant meters and/or recall all outstanding meters in accordance with the City's existing Hydrant Meter Rental Agreement.

F. The City Manager may recommend and, upon resolution of the City Council, implement a water allocation per customer account served by the City of El Paso de Robles, and a schedule of penalty surcharges for exceeding the water allocation. If the City Council adopts or modifies water allocations, the City Manager will post notice of the water allocation prior to the effective date(s). Following the effective date(s) of the water allocation as established by the City Council, any customer that uses water in

excess of the allocation will be subject to a penalty surcharge for each billing unit of water in excess of the allocation. The penalty surcharge for excess water usage will be in addition to any other remedy, penalty, or fine that may be imposed for violation of this Chapter. At the City's discretion, the water conservation measures required under Level 1, Level 2, and Level 3 conditions may be suspended during the period a water allocation is in effect.

14.02.080 Level 4 Water Supply Shortage – Emergency Condition

A. The City Manager may declare a water shortage emergency pursuant to California Water Code section 350 and declare a Level 4 Water Supply Shortage condition (a :Level 4 Condition") when there is a reasonable probability, due to a projected imbalance in available water supply and projected peak demand, that there will be a supply shortage and that a consumer demand reduction of up to 50 percent is required in order to ensure that sufficient supplies will be available to meet anticipated demands. Upon declaration of Level 4 Condition, the City Manager or his designee shall take all necessary actions to implement the mandatory Level 4 conservation practices identified in this Chapter and on the grounds provided in California Water Code section 350. In the event a Level 4 Condition has been declared by the City Manager, the City Council shall consider the ratification of such declaration at its next regularly scheduled meeting or at a special meeting called for such purpose.

B. During the period of a declared Level 4 Condition, all water customers shall be required to comply with all Level 1 Condition, Level 2 Condition and Level 3 Condition water conservation measures and shall also comply with the following additional mandatory conservation measures:

1. All landscape irrigation, except crops and landscape products of commercial growers and nurseries, shall be prohibited. This restriction does not apply to:

a. Watering of livestock; and

b. Essential Public Works projects and actively irrigated environmental mitigation projects.

2. All water leaks, breaks of other plumbing malfunctions shall be repaired upon discovery or within twenty-four hours of notification by the City of El Paso de Robles, with the exception of rental properties, which shall be have up to seventy-two hours to repair interior unit leaks, in order to comply with state laws regarding the provision of notice to tenants.

3. Filling or refilling of residential pools and spas is prohibited.

C. The City shall not enter into any new commitments or agreements to provide water to customers or agencies either inside or outside of the City of El Paso de Robles.

14.02.090 Procedures for Determination and Notification of Water Supply Shortage Level

A. The existence of a Level 1 Condition may be declared upon recommendation by the City Manager along with a written determination of the existence of the facts and circumstances supporting the determination. A copy of the written determination will be filed with the City Clerk. The City Manager or his designee will publish a notice of the determination of existence of a Level 1 Condition in the City's official newspaper. The City may also post notice of the Condition on its website or include it in its regular billing statement..

The Water Department will monitor the projected supply and demand for water during periods of emergency or *drought* and will recommend to the City Manager the extent of the conservation required. The City Manager will recommend to the City Council the implementation or termination of the appropriate level of *water conservation* in accordance with this Chapter.

B. The existence of a Level 2 or Level 3 Condition may be declared upon recommendation by the City Manager and notification of the City Council. The

mandatory conservation measures applicable to Level 2 or Level 3 Condition, as applicable, will take effect on the tenth day after the date the shortage level is declared. Within five days following the declaration of the applicable Condition, the City Manager or his designee will publish a notice providing the extent, terms and conditions respecting the use and consumption of water. The notice shall be published, at a minimum, for three consecutive days in the newspaper used for official City notices. The City may also post notice of the Condition on its website or include it in its regular billing statement.

C. The existence of Level 4 Condition may be declared upon recommendation by the City Manager. The mandatory conservation measures applicable to Level 2, Level 3, or Level 4 Conditions will take effect on the fourth day after the date the shortage level is declared. Within 24 hours following the declaration of the shortage level, the City Manager or his designee will publish a notice giving the extent, terms and conditions respecting the use and consumption of water. The notice shall be published, at a minimum, for three consecutive days in the newspaper used for official City notices. The City may also post notice of the Condition on its website or include it in its regular billing statement.

D. The City Council may declare an end to a particular Condition upon the recommendation of the City Manager by the adoption of a resolution at any regular or special meeting of the City Council.

14.02.100 Hardship Variance

A. If, due to unique circumstances, a specific requirement of this Chapter would result in undue hardship to a customer using City of El Paso de Robles water or to property upon which water is used, that is disproportionate to the impacts to water users generally or to similar property or classes of water uses, then the customer may apply for a variance to the requirements as provided in this Section 14.02.100.

B. The variance may be granted or conditionally granted only upon a written finding of the existence of facts demonstrating an undue hardship to a customer or to property upon which water is used, that is disproportionate to the impacts to water users generally or to similar property or classes of water user due to specific and unique circumstances of the user or the user's property.

1. Application. Application for a variance will be in written form prescribed by the City Manager or his designee and will be accompanied by a non-refundable processing fee in an amount set by resolution of the City Council.

2. Supporting Documentation. The written application will be accompanied by photographs, maps, drawings, or other pertinent information as applicable, including a written statement of the applicant.

3. Approval Authority. The City Manager or his designee will exercise approval authority and act upon any completed application after submittal and may approve, conditionally approve, or deny the variance. The applicant requesting the variance will be promptly notified in writing of any action taken. The decision of the City Manager or his designee is final unless the applicant files a written appeal to the City Council within 10 days. Unless specified otherwise at the time a variance is approved, the variance applies to the subject property during the term of the applicable Condition.

4. Required Findings for Variance. An application for a variance will be denied unless the approving authority finds, based on the information provided in the application, supporting documents, or such additional information as may be requested, and on water use information for the property as shown by the records of the City of El Paso de Robles, all of the following:

a. That the variance does not constitute a grant of special privilege inconsistent with the limitations upon other City of El Paso de Robles *customers*.

b. That because of special circumstances applicable to the property or its

use, the strict application of this Chapter would have a disproportionate impact on the property or use that exceeds the impacts upon customers generally.

c. That the authorizing of such variance will not be of substantial detriment to adjacent properties, and will not materially affect the ability of the City of El Paso de Robles to effectuate the purpose of this Chapter 14.02 and will not be detrimental to the public interest.

d. That the condition or situation of the subject property or the intended use of the property for which the variance is sought is not common, recurrent or general in nature.

5. No relief will be granted to any customer for any reason in the absence of a showing by the customer that the customer has achieved the maximum practical reduction in water consumption in the customer's residential, commercial, industrial, institutional, agricultural or governmental water consumption.

14.02.110 Violations and Penalties

It is unlawful for any *customer* to violate the mandatory provisions of this Chapter. Violations are subject to criminal, civil, and administrative penalties and remedies as provided in Chapter 1 of this Code. In addition, service of water may be discontinued or appropriately limited through the installation of flow-restricting devices to any *customer* who willfully uses water in violation of this Chapter. {Editors Note: As specified in Chapter 1.02 Penalties, Section 1.02.010, following the issuance of two warnings, a fine not exceeding one hundred dollars shall be assessed for a first violation, a fine not exceeding two hundred dollars shall be assessed for a second violation of this ordinance within one year, and a fine not exceeding five hundred dollars shall be assessed for a third violation of this ordinance within one year.}

SECTION 3. Section 14.04.180 of the Municipal Code of the City of El Paso de Robles is hereby repealed.

SECTION 4. Severability

If any action, subsection, sentence, clause or phrase of this ordinance is, for any reason, held by a court of competent jurisdiction to be invalid or unconstitutional, such decision shall not affect the validity of the remaining portions of this Ordinance which can be given effect without the invalid provisions or application, and to this end the provisions of this Ordinance are declared to be severable.

SECTION 5. Publication

The City Clerk will certify to the passage of this Ordinance by the City Council of the City of El Paso de Robles, California, and cause the same to be published once in a newspaper of general circulation, published and circulated in the City of El Paso de Robles.

SECTION 6. Effective Date.

Based on the preceding, and having received no less than four affirmative votes of the City Council, this Ordinance is declared to be an urgency measure necessary for the immediate protection of the public health, safety and general welfare of the community, and shall be effective immediately upon its adoption, pursuant to Government code Section 36937, subdivision b.

INTRODUCED, ADOPTED AND APPROVED at a regular meeting of the City Council of the City of El Paso de Robles held on June 2, 2009 by the following vote:

AYES: Gilman, Hamon, Steinbeck, Strong and Picanco
NOES:
ABSTAIN:
ABSENT:

Duane Picanco, Mayor

ATTEST:

Cathy David, Deputy City Clerk

Appendix D

Efficient Landscape Ordinance

ORDINANCE NO. 964 N.S.

AN ORDINANCE OF THE CITY OF EL PASO DE ROBLES
ADDING SECTION 21.22.B,
WATER EFFICIENT LANDSCAPE ORDINANCE

WHEREAS, The Water Conservation in Landscaping Act of 2006 (Assembly Bill 1881) requires cities to adopt landscape water conservation ordinances by January 1, 2010; and

WHEREAS, in accordance with this law, the California Department of Water Resources prepared a Model Water Efficient Landscape Ordinance (MWELO); and

WHEREAS, all cities and counties have until January 1, 2010, to either adopt the state's MWELO or their own local water efficient landscape ordinance; and

WHEREAS, a draft local ordinance has been prepared and provides requirements that:

- Are as effective at achieving water savings as the MWELO; and
- Reduces the costs for new homes compared to the State's requirements; and.
- Reduces the City's administrative costs compared to the State's MWELO approach.

and

WHEREAS, this Zoning Ordinance Amendment would include a new Section 21.22B, Water Efficient Landscape Regulations; and

WHEREAS, at its meeting on November 10, 2009, the Planning Commission took the following actions regarding this ordinance:

a. Considered the facts and analysis, as presented in the staff report prepared for this project;

b. Conducted a public hearing to obtain public testimony on the proposed ordinance;

c. Recommended that the City Council approve the proposed ordinance; and

WHEREAS, based on consideration of information received at its meeting of December 1, 2009, the City Council took the following actions regarding this ordinance:

a. Considered the facts and analysis, as presented in the staff report prepared for this project;

b. Conducted a public hearing to obtain public testimony on the proposed ordinance;

c. Considered the recommendation from the Planning Commission meeting on November 10, 2009;

d. Introduced said ordinance for the first reading; and

WHEREAS, on December 15, 2010, the City Council held a second reading of said ordinance.

NOW, THEREFORE, the City Council of the City of El Paso de Robles does hereby ordain as follows:

SECTION 1. Council Findings.

The Council finds that:

a. It is necessary to amend the Zoning Ordinance in order to comply with the Water Conservation in Landscaping Act of 2006 (Assembly Bill 1881);

b. The proposed code amendment would meet the City's policy to promote the conservation and efficient use of water and to prevent waste of this valuable resource;

c. Consistent with California Law, the purpose of this ordinance is to promote the values and benefits of landscapes while recognizing the need to invest water and other resources as efficiently as possible;

d. Consistent with California Law, the purpose of this ordinance is to establish a structure for planning, designing, installing, maintaining, and managing water efficient landscapes in new construction and rehabilitated projects.

e. The proposed ordinance will achieve an overall water use reduction of approximately 19 percent compared to development without the landscape restrictions.

f. The 19 percent reduction is estimated to be at least as effective as the States Model Water Efficient Landscape and Irrigation Ordinance as a result of the turf limitations and limitations on overhead spray irrigation for all projects including single family residential.

SECTION 2: A new Chapter 21.22B, Water Efficient Landscape Ordinance will be added to Title 21, Zoning Code, as shown in Exhibit A.

SECTION 3: A revision to Chapter 21.16. E.340. Landscape Requirements for Front Yards (R-1 Zone), **see bold language below**:

A. Within one year of issuance of a certificate of occupancy, the holder of a building permit for a single-family dwelling shall have installed front yard landscaping in all nonpaved portions of the area between the front of the home and the street upon which the home faces. The landscaping may consist of lawn, ground cover, flowers, gravel, bark or other equivalent decorative materials. Bare ground and/or weeds are not acceptable landscaping treatments. **Please refer to Chapter 21.22B, Water Efficient Landscape Ordinance for rules and regulations regarding landscape and irrigation, including limitations on the percentage of turf/lawn that can be placed in the front yard.**

B. In order to ensure enforcement of this provision, if required landscaping is not completed prior to issuance of a certificate of occupancy, a security deposit, in a form and an amount to be established by city council resolution, shall be submitted prior to issuance of the certificate of occupancy. The costs of inspecting the landscaping, as required by this section, shall be charged against the security deposit. The remaining deposit shall be refunded upon compliance with the requirements of this section.

C. Upon completion of landscaping installation, the holder of the building permit shall request a building inspection; upon approval of the installed landscaping, the permit holder is released from further responsibility regarding the landscaping. Following approval of landscaping installation, it shall thereafter be the responsibility of the property owner to ensure that the installed landscaping is adequately maintained. Inadequately maintained landscaping may be grounds for public nuisance abatement. Judgment of the adequacy of installed and/or maintained landscaping shall be the responsibility of the city planner, who shall use reasonable discretion. Exceptions from the requirements to landscape front yard areas may be granted by the development review committee upon demonstration that such landscaping would not be reasonable or appropriate based on property size or location.

SECTION 4: A revision to Chapter 21.16.I.290.C Landscape Requirements (Multi-family Residential Zones):

A. Landscaping. Landscape plans shall be approved by the Development Review Committee to meet the standards listed below.

1. Protection and Use of Existing Vegetation. Development on hillside lots shall, to the maximum extent possible, protect and use existing vegetation. Existing groundcover and shrubs should not be removed from lands with steep slopes (thirty percent or greater) unless necessary for weed abatement to remove fire hazards. Existing groundcover

should not be removed from lesser slopes unless replaced with other vegetation. Existing groundcover shall be protected from damage during construction.

2. New Landscaping. All development on hillside lots shall provide new landscaping as follows:
   a. Erosion Control. All graded or cleared slopes shall be landscaped with groundcover designed to hold the slope and to mitigate the visual impacts associated with the bare ground. Groundcover on slopes with vertical heights greater than eight feet shall be irrigated.

   b. Architectural Enhancement. Trees and shrubs shall be planted to provide screening under decks, along walls, and where required as a condition of site plan or development plan review to assist in providing visual relief.

   c. Street Trees. Street trees shall be planted as required by Title 10 of this code.

   d. Irrigation. All landscaping required for erosion control, street trees and architectural enhancement shall be irrigated except where the development review committee explicitly approves otherwise.

   e. Plant Species. New landscaping shall incorporate plant species which meets the following criteria:
      i. New vegetation should be compatible with natural vegetation and that on surrounding properties.
      ii. All planting within thirty feet of buildings should be fire-retardant.
      iii. For water conservation purposes, drought-tolerant species are encouraged.

   f. Completion of Landscaping. All landscaping and irrigation required for erosion control, street trees and architectural enhancement shall either be completed prior to issuance of a certificate of occupancy or security such as a performance bond be posted.

   g. **Please refer to Chapter 21.22B, Water Efficient Landscape Ordinance for rules and regulations regarding landscape and irrigation, including limitations on the percentage of turf/lawn that can be placed in the landscape areas.**

SECTION 5. Publication. The City Clerk shall cause this ordinance to be published once within fifteen (15) days after its passage in a newspaper of general circulation, printed, published and circulated in the City in accordance with Section 36933 of the Government Code.

SECTION 6. Severability. If any section, subsection, sentence, clause, or phrase of the Ordinance is, for any reason, found to be invalid or unconstitutional, such finding shall not affect the remaining portions of this Ordinance.

The City Council hereby declares that it would have passed this Ordinance by section, subsection, sentence, clause, or phrase irrespective of the fact that any one or more sections, subsections, sentences, clauses, or phrases are declared unconstitutional.

SECTION 7. Inconsistency. To the extent that the terms or provisions of this Ordinance may be inconsistent or in conflict with the terms or conditions of any prior City ordinance(s), motion, resolution, rule, or regulation governing the same subject matter thereof, such inconsistent and conflicting provisions of prior ordinances, motions, resolutions, rules, and regulations are hereby repealed.

Introduced at a regular meeting of the City Council held on December 1, 2009, and passed and adopted by the City Council of the City of El Paso de Robles on the 15th day of December, 2009 by the following vote:

AYES: Gilman, Hamon, Steinbeck, Strong, and Picanco
NOES:
ABSTAIN:
ABSENT:

Duane Picanco, Mayor

ATTEST:

Lonnie Dolan, Deputy City Clerk

Exhibit A

Chapter 21.22B

LANDSCAPE and IRRIGATION ORDINANCE

Sections:

21.22B.010 Purpose
21.22B.020 Definitions
21.22B.030 Applicability
21.22B.040 Turf Limitations for New Construction and Rehabilitated Landscapes
21.22B.050 Landscape and Irrigation System Design Requirements

21.22B.010 Purpose

Consistent with California State Law, it is the purpose of this ordinance to: (a) promote the values and benefits of landscapes while recognizing the need to use water resources as efficiently as possible; (b) establish a structure for planning, designing, installing, maintaining, and managing water efficient landscapes in new construction and rehabilitated projects.

21.22B.020 Definitions (Definitions related to the technical information of the Landscape Documentation Package are provided as Attachment 5, of the Landscape and Irrigation Design Guide.)**:**

"Certificate of Completion" means the document required under Section 21.22B.050.B.4.

"Landscape Architect" means a person who holds a license to practice landscape architecture in the State of California as described in the Business and Professionals Code, §5615.

"Landscaped area" means all the planting areas, turf areas, and water features in a landscape design plan subject to the Maximum Applied Water Allowance calculation. The landscape area does not include footprints of buildings or structures, sidewalks, driveways, parking lots, decks, patios, gravel or stone walks, other pervious or non-pervious hardscapes, and other nonirrigated areas designated for non-development (e.g., open spaces and existing native vegetation).

"Landscape contractor" means a person licensed by the state of California to construct, maintain, repair, install, or subcontract the development of landscape systems.

"Landscape Documentation Package (LDP)" means the documents required under Section 21.22B.050.B.3.

"Landscape project" means total area of landscape in a project as defined in "landscape area" for the purposes of this ordinance.

"Multi-family Residential" means two or more attached residential units. Landscape areas for multiple detached units on one parcel will be considered single family units for the purposes of this Ordinance.

"New construction" means, for the purposes of this ordinance, a new building with a landscape or other new landscape, such as a park, playground or greenbelt without an associated building.
"Permit" means an authorizing document issued by local agencies for new construction or rehabilitated landscapes.

"Pervious" means any surface or material that allows the passage of water through the material and into the underlying soil.

"Project applicant" means the individual or entity submitting a Landscape Documentation Package required under Section 21.22B.050.B.3, to request a permit, plan check or design review from the local agency. A project applicant may be the property owner or his or her designee.

"Rehabilitated landscape" means any re-landscaping project that requires a permit, plan check, or design review.

"Runoff" means water which is not absorbed by the soil or landscape to which it is applied and flows from the landscape area. For example, runoff may result from water that is applied at too great a rate (application rate exceeds infiltration rate) or when there is a slope.

"Single Family Residential" one home on one lot, or multiple detached units on one lot (not attached).

"Soil moisture sensing device" or "soil moisture sensor: means a device that measures the amount of water in the soil. The device may also suspend or initiate an irrigation event.

"Turf" means a ground cover surface of mowed grass. Annual bluegrass, Kentucky bluegrass, Perennial ryegrass, Red fescue, and Tall fescue are cool-season grasses. Bermudagrass, Kikuyugrass, Seashore Paspalum, St. Augustinegrass, Zoysiagrass, and Buffalo grass are warm-season grasses.

"Valve" means a device used to control the flow of water in the irrigation system.

"Water conserving plant species" means a plant species identified as having a low plant factor.

21.22B.030 Applicability

The requirements within this Chapter apply to new construction and rehabilitated landscapes for commercial, industrial and residential projects that are subject to the development review process and/or a building permit.

A. Development Review Process

In conjunction with the submittal of a project for development review (tentative parcel map, tentative tract, development plan or conditional use permit), conceptual landscape plans shall be provided that demonstrate that the design of the landscaping complies with the standards within this Ordinance. These plans shall be reviewed by City Staff during the development review process.

B. Building Permit

In conjunction with the submittal of a project for building plan check, final landscape and irrigation plans, in compliance with this Ordinance, shall be submitted with the project. After a plan check review by the Planning and/or Public Works Departments for compliance with this Ordinance, a Building Permit may be issued. Fees consistent with the fees established for building plan check will be applied for staff review of the landscape and irrigation plan.

C. Certificate of Completion

Once the landscape and irrigation plans and necessary documentation has been provided in substantial compliance with the LDP, a Certificate of Completion may be issued. A Certificate of Completion shall be issued prior to the project receiving a Certificate of Occupancy by the Building Division.

D. Landscape and Irrigation Installation

For both projects less than or greater than 1 acre, the landscape and irrigation shall be installed per the approved plans prior to the issuance of a Certificate of Occupancy or "final" of the building/project.

E. Landscape Bond

For projects that have a landscape area of 1-acre or greater and require a LDP, a bond may be posted which would allow a building to be finaled and a Certificate of Occupancy to be issued prior to the site landscape and irrigation being completed. The bond shall be based on an estimate for labor and materials to complete the landscape and irrigation project per the approved plans, plus an additional 25-percent. The applicant shall fill out the Landscape Bond Security Bond Agreement along with the necessary bonding information, to the Public Works Department for review and approval to determine the specific bond amount.

For projects that have a landscape area of less than 1-acre which does not require the LDP, the Community Development Director or his or her designee may approve a bond to be posted which would allow a building to be finaled and a Certificate of Occupancy to be issued prior to the site landscape and irrigation being completed.

21.22B.040 Turf Limitations for New Construction and Rehabilitated Landscapes.

A. All new construction projects (residential, commercial, industrial) shall comply with the following limitations:

1. Turf areas less than 8 ft. in width in any direction are prohibited, unless subsurface irrigation is used and maximum turf areas do not exceed the percentages outlined in this ordinance.
2. Turf shall be prohibited within the public right-of-way, including parkways.
3. Developments shall be graded to maximize the on-site distribution of runoff to planted areas.
4. For non-turf areas, drip irrigation methods and low water use plants are recommended.
5. Covenants, Conditions and Restrictions (CCRs) shall not require turf landscaping nor have the effect of prohibiting low-water use landscaping and shall include by reference and/or attachment a copy of Chapter 21.22B, City of Paso Robles Landscape Ordinance.

B. Commercial and Industrial projects:

1. The area planted in turf grass and irrigated with spray irrigation shall be limited to 10 percent of the development's landscaped area.

2. Exceptions: This section does not apply to Cemeteries, plant collections as part of botanical gardens and arboretums open to the public, City parks, and school sports fields.

C. Single Family Residences

1. Turf grass installed with spray irrigation in residential front yards shall be limited to 25 percent of the landscapable area.

2. The common areas in residential subdivisions planted in turf (including landscape and lighting district areas) shall be limited to 10 percent of the landscaped area. (Excluding active play areas such as ball fields, playgrounds, and picnic areas).

D. Model Homes

1. Turf grass shall be prohibited in the front yards of model homes, and shall be limited to 50 percent of the landscaped area in back and side yards.

2. Model homes shall be used to educate future home owners about water efficient landscape and irrigation techniques. Education features for Model homes shall include:

   (a) The installation of interpretive landscape information signs that describe the principles of water efficient landscapes including features such as hydrozones, appropriate irrigation equipment and others techniques that contribute to the overall water efficient irrigation theme.
   (b) Information shall be provided to new home owners that include techniques on designing, installing, managing, and maintaining water efficient landscapes.

E. Multi-family Residential Projects

1. Turf grass shall be limited to 20 percent of the landscaped area. The 20 percent limitation shall be exclusive of areas designed as active play surfaces (e.g. ballfields, playgrounds, picnic areas).

F. Rehabilitated Landscapes

1. Rehabilitated landscapes shall comply with the turf limitations outlined in Sections A-E above, as appropriate to the property type.

21.22B.050 Landscape and Irrigation System Design and Information Requirements

A. All project landscaping and irrigation plans/designs shall comply with the following standards:

1. Utilize rain sensors, either integral or auxiliary, that suspend irrigation during and after rainfall events, shall be required on all irrigation control systems.

2. Prohibit turf on slopes greater than 20% where the toe of the slope is adjacent to an impermeable hardscape. (where 20% means 1 foot of vertical elevation change for every 5 feet of horizontal length rise divided by run X 100 = slope percent).

3. Water features shall use recirculating water systems.

4. Prohibit overhead spray irrigation within 24 inches of a non-permeable surfaces such as but not limited to concrete sidewalks and driveways. Subsurface irrigation may be used as long as other requirements of this ordinance are met. Allowable irrigation within the setback from non-permeable surfaces may include drip, drip line, or other low-flow non-spray type of systems. The setback area may be planted or non-planted. The surfacing of the setback may be mulch, gravel, cobles, or other porous material. These restrictions may be modified if the landscape area is adjacent to permeable surfacing, and no runoff occurs or the adjacent non permeable surface drains entirely to landscaped areas.

5. Irrigation systems shall be designed and constructed to achieve a minimum efficiency of 71 percent.

6. Apply a minimum two inch (2") layer of mulch on all exposed soil surface of planting areas.

7. The architectural guidelines and Covenants, Conditions, and Restrictions of common interest developments shall not have the effect of prohibiting the use of low-water use plants or requiring turf grass in landscaped areas.

B. Projects that have a landscape area <u>equal to or greater than 1 acre</u> need to submit the flowing information:

Please note that the landscape area for new residential subdivisions will be calculated on an individual lot basis as each lot develops, not a total of landscape areas prior to subdivision. Therefore, generally a residential subdivision will not require an LDP for individual lot landscaping, however if there are common areas, or areas within a Landscape and Lighting District that have landscape areas 1 acre or greater, there will be a requirement for an LDP for those areas to be completed prior to the recordation of the final map.

1. All of the items identified in Section A above.

2. Weather-based irrigation controllers, soil moisture-based controllers, or other self-adjusting irrigation controllers shall be required for irrigation scheduling.

3. The following documents and plans need to be submitted prior to the issuance of a Building Permit for the associated project (Please refer to the Landscape & Irrigation Design Guide for specific forms and criteria):

   Compliance with Landscape Documentation Package which includes completion of the following items:
   - Project Information
   - Water Efficient Landscape Worksheet
   - Soil Management Report
   - Landscape Design Plan
   - Irrigation Design Plan
   - Grading Design Plan

4. The following documents and plans need to be completed and the landscape and irrigation project shall be installed prior to the issuance of a Certificate of Occupancy for the

associated project (Please refer to the Landscape & Irrigation Design Guide for specific forms and criteria):

Certificate of Completion which includes documentation of the following items:

- Irrigation Scheduling
- Landscape and Irrigation Maintenance Schedule
- Irrigation Audit, Irrigation Survey and Irrigation Water Use Analysis
- Irrigation Efficiency
- Stormwater Management

Appendix E

Residential Assistance Program Survey

CITY OF EL PASO DE ROBLES

"The Pass of the Oaks"

Home Water Audit Worksheet

Customer Information & Water Consumption

Cust ID: _____ Apt. Date: ___/___/___ Time: _____ Cancelled: O No Show: O Reschedule to: _____

Customer Name: _____ Water Bill Acct #: _____

Service Address: _____ Apt/Unit: ___ Retailer: _____

Mailing Address (if different): _____ Day Ph: _____Other Ph: _____

Type of Dwelling Single Family O Multi Family O # of Units: ____ Own O Rent O

Residence Year Constructed: _____ Years at Site: _____ # of Residents: _____ #of Bathrooms: _____

How heard about program: Water Insert O Website O Newspaper O Radio O Friend O Other O

Landscape Controller Yes O No O Okay to Modify Irrigation Schedule? O Landscape Svc? O

Irrigation Automatic In-Ground O #of Stations: _____ Manual In-Ground O Hose O None O

Consumption

This Month Last Year: _____ units

Low Month Last Year: _____units

High Month Last Year: _____ units

5 Minute Leak Check

Meter Second Reading _____

Meter First Reading - _____

Total hcf = _____

Conversion to (gpd) (hcf x 215,568) = _____

Leak Rate (gpd) = _____

House Leak? Yes O No O

Showers

Location	gpm	Leak Rate	Diverter Leak	Shower Head Installs	Adaptor	Old Shower Heads Recycled
		gpd	Yes O No O	I,P,R, N,U	Yes O	Yes O No O
		gpd	Yes O No O	I,P,R, N,U	Yes O	Yes O No O
		gpd	Yes O No O	I,P,R, N,U	Yes O	Yes O No O

Faucets

Location	gpm	Leak Rate	Aerator Installs	Location	gpm	Leak Rate	Aerator Installs
		gpd	I,P,R, N,U			gpd	I,P,R, N,U
		gpd	I,P,R, N,U			gpd	I,P,R, N,U
		gpd	I,P,R, N,U			gpd	I,P,R, N,U

Installation Legends:

I = Installed, **P** = Provided, **R** = Refused, **N** = Not Compatible (didn't fit, brass fixture), **U** = Unable (frozen on)

ORIGINAL: Customer; Yellow: Water Conservation Office

Toilets

Location	Type of Toilet gallons per flush (gpf)	Leaks?	Brand/Yr	Bowl Clnr?	Flapper Installs *Type Code*	Flapper Brand
	<=1.6 O Over 1.6 O Not Sure O	Yes O		Yes O	I,P,R, N,U	
	<=1.6 O Over 1.6 O Not Sure O	Yes O		Yes O	I,P,R, N,U	
	<=1.6 O Over 1.6 O Not Sure O	Yes O		Yes O	I,P,R, N,U	
	<=1.6 O Over 1.6 O Not Sure O	Yes O		Yes O	I,P,R, N,U	

Installation Legends:
I = Installed, **P** = Provided, **R** = Refused, **N** = Not Compatible (didn't fit, brass fixture) **U** = Unable (frozen on)

Appliances

Item	Use Patterns	Characteristics	Item		Characteristics	
Clothes Washer	_____# Loads	Energy Star Yes O No O	**Softener**	Yes O No O Timer based O	Leased O	Own O DIR O
Coin Operated	_____# Loads	_____# Machines	**Reverse Osmosis**	Yes O No O	On/Off Switch	Yes O No O
Dish Washer	_____# Loads		**Pool**	Yes O No O	Cover?	Yes O No O
Water Heater		Leak? Yes O No O	**Hot Tub/Spa**	Yes O No O	Cover?	Yes O No O

Preset Irrigation Schedule

This schedule is for: Spring O Summer O Fall O

Location	Type*	Total Minutes	Days/Week	Cycles/Day	Minutes/Cycle

*Sprinkler Type: P=Pop-up R=Rotor I=Impact B=Bubbler D=Drip MS=Microspray H=Hose w/Sprinkler

Modified / Suggested Irrigation Schedule

Controller Start Time: _____ AM O PM O

This irrigation controller schedule has been modified: Yes O No O

Location	Station Number	Minutes/Week			Days/Week			Cycles/Day			Minutes/Cycle			Action Taken
		Sp	Sum	Fall	Sp	Sum	Fall	Sp	Sum	Fall	Sp	Sum	Fall	M, U, S/Pgm

Sp = Spring Sum = Summer M = Modified U = Unchanged S = Suggested Pgm=Programmed

ORIGINAL: Customer; Yellow: Water Conservation Office

Customer Priority Action Plan

Landscape Priorities:

Priority #____ Recommended Watering Schedule: Early morning is the best time to water!

Priority #____ Tune-up your watering system and check it monthly during the summer.

Item	Area/Action Needed
O Clogged heads/emitters	_____
O Broken heads/emitters	_____
O Mismatched heads	_____
O Spray pattern blocked	_____
O Broken pipe/tube	_____
O Misdirected/overspray	_____
O Ponding/run-off	_____
O Sunken/not vertical	_____
O Pressure problems	_____
O Other	_____

Priority #____ Put plants with similar watering needs on the same water circuit or station.

You have a watering station/area where high water use plants are mixed with plants that need much less water. In your case we recommend the following:

O Modify your irrigation system so that plants with common water needs are watered on the same circuit or station.
O Transplant some of our plants so they are grouped by common water needs.

Priority #____ Consider converting unused, narrow and/or tiny grass areas to low water-use plants and/or mulch.

These areas cannot be watered efficiently without run-off. Any strip less than 8 feet wide should not be planted in turf.

Priority #____ Mulch garden.

Mulch is the cornerstone of water management because it can reduce water use by 25 to 50 percent. Mulch with at least a 2 inch layer.

Priority #____ Aerate your soil-it is compacted.

Little water can penetrate compacted soil and get to the grass roots. Aeration is usually done by a machine that can be rented, or a landscape service.

Priority #____ De-thatch your turf.

Thatch (living and dead grass stems) forms a layer above the soil surface. If greater than ½ inches, it doesn't allow water to penetrate. De-thatch this fall. You can rent a power thatcher or use a sturdy steel rake to remove it.

Indoor Priorities:

Priority #____ Change-out your old water guzzling toilet. Your toilet(s) appear to be flushing over 1.6 gallons per flush (gpf).

Replace older toilets with high-efficiency toilets which use 1.6 gallons of water per flush or less. A family of four (4) can save an average of 15,000 gallons each year!

Priority #____ Your 1.6 gallons per flush (gpf) toilets are flushing more than 2.0 gallons per flush.

The primary reasons this occurs are because the flapper is either the wrong one for the unit (flappers for 1.6 gpf toilets are quite specific), or the flapper is adjusted incorrectly to let more water flush out before closing. Please refer to your manufacturer's instructions, or talk to a reputable toilet dealer about the appropriate flapper and adjustments.

Priority #____ Wow! Fix those leaks! We found an estimated _____ gallons per day in leaks in the following areas:

_____

Priority #____ Replace your old showerheads and/or faucet aerators.

We found the flow rates on your existing fixtures were _____. New model showerheads use 2.5 gpm or less and faucet aerators use 1.5 gpm or less and perform excellently. O Installed O Offered, but declined.

Priority #____ Install a pressure reducing valve/Reduce your valve setting.

Your water pressure at the house is high (_____psi.) and puts additional strain on your water-using appliances and irrigation system. Consult with a plumber to install a pressure reducing valve at your home or reduce your pressure.

Comments:

For additional information, please call the City of Paso Robles Water Conservation Office at (805) 227-7250. Thank you for participating in the Home Water Audit Program. Implementing these recommendations should help you in reducing your household water consumption.

Appendix F

California Urban Water Conservation Council

BMP Reports

The fields in red are required.

Agency name: City of Paso Robles

Reporting unit name (District name): City of Paso Robles

Reporting unit number: 7051

Primary contact:

First name: Keith

Last name: Larson

Email: klarson@prcity.com

You must enter the reporting unit number that we have on record for your agency. Click here to open a table to obtain this number.

Base Year Data

Link to FAQs

Reporting Unit Base Year

What is your reporting period? Calendar

Base Year 2008

BMP 1.3 Metering

Number of unmetered accounts in Base Year 0

BMP 3.1 & BMP 3.2 & BMP 3.3 Residential Programs

Number of Single Family Customers in Base Year 8,722

Number of Multi Family Units in Base Year 2,439

BMP 3.4 WaterSense Specification (WSS) Toilets

Number of Single Family Housing Units constructed prior to 1992 5000

Number of Multi Family Units prior to 1992 1375

Average number of toilets per single family household 1.75

Average number of toilets per multi family household 1.5

Five year average resale rate of single family households 200

Five-year average resale rate of multi family households 50

Average number of persons per single family household 2.66

Average number of persons per multi family household 2.66

BMP 4.0 & BMP 5.0 CII & Landscape

Total water use (in Acre Feet) by CII accounts 2393

Number of accounts with dedicated irrigation meters 347

Number of CII accounts without meters or with Mixed Use Meters 818

Number of CII accounts 1,165

Comments:

The fields in red are required.

Agency name: City of Paso Robles

Reporting unit name (District name): City of Paso Robles

Reporting unit number: 7051

Primary contact:

First name: Keith

Last name: Larson

Email: klarson@prcity.com

You must enter the reporting unit number that we have on record for your agency. Click here to open a table to obtain this number.

Link to FAQs

2009

See the complete MOU: View MOU

See the coverage requirements for this BMP:

BMP 1.1 Operations Practices

Comments:

Conservation Coordinator

Conservation Coordinator (•) Yes ( ) No

Contact Information

First Name	Keith
Last Name	Larson
Title	Water Conservation Manager
Phone	805-227-7238
Email	klarson@prcity.com

Note that the contact information may be the same as the primary contact information at the top of the page. If this is your case, excuse the inconvenience but please enter the information again.

Water Waste Prevention

Water Agency shall do one or more of the following:

a. Enact and enforce an ordinance or establish terms of service that prohibit water waste
b. Enact and enforce an ordinance or establish terms of service for water efficient design in new development
c. Support legislation or regulations that prohibit water waste
d. Enact an ordinance or establish terms of service to facilitate implementation of water shortage response measures
e. Support local ordinances that prohibit water waste
f. Support local ordinances that establish permits requirements for water efficient design in new

To document this BMP, provide the following:

a. A description of, or electronic link to, any ordinances or terms of service
b. A description of, or electronic link to, any ordinances or requirements adopted by local jurisdictions or regulatory agencies with the water agency's service area.
c. A description of any water agency efforts to cooperate with other entities in the adoption or enforcement of local requirement
d. description of agency support positions with respect to adoption of legislation or regulations

You can show your documentation by providing files, links (web addresses), and/or entering a description.

File name(s): Email files to natalie@cuwcc.org See link provided on 2010 BMP 1.1 Report

Web address(s) URL: comma-separated list

Enter a description: We have a Water Conservation and Water Shorage Contingency Plan Ordinance No. 956, adopted in June of 2009. A copy of the ordnance may be found at pasowater.com. This ordnance is detailed in the City's 2010 Urban Water Management Plan.

The fields in red are required.

Agency name: City of Paso Robles

Reporting unit name (District name): City of Paso Robles

Reporting unit number: 7051

Primary contact:

First name: Keith

Last name: Larson

Email: klarson@prcity.com

You must enter the reporting unit number that we have on record for your agency. Click here to open a table to obtain this number.

Link to FAQs

2010

See the complete MOU: View MOU

See the coverage requirements for this BMP:

BMP 1.1 Operations Practices

Comments:

Conservation Coordinator

Conservation Coordinator (•) Yes ( ) No

Contact Information

First Name	Keith
Last Name	Larson
Title	Water Conservation Manager
Phone	805-227-7238
Email	klarson@prcity.com

Note that the contact information may be the same as the primary contact information at the top of the page. If this is your case, excuse the inconvenience but please enter the information again.

Water Waste Prevention

Water Agency shall do one or more of the following:

a. Enact and enforce an ordinance or establish terms of service that prohibit water waste
b. Enact and enforce an ordinance or establish terms of service for water efficient design in new development
c. Support legislation or regulations that prohibit water waste
d. Enact an ordinance or establish terms of service to facilitate implementation of water shortage response measures
e. Support local ordinances that prohibit water waste
f. Support local ordinances that establish permits requirements for water efficient design in new

To document this BMP, provide the following:

a. A description of, or electronic link to, any ordinances or terms of service
b. A description of, or electronic link to, any ordinances or requirements adopted by local jurisdictions or regulatory agencies with the water agency's service area.
c. A description of any water agency efforts to cooperate with other entities in the adoption or enforcement of local requirement
d. description of agency support positions with respect to adoption of legislation or regulations

You can show your documentation by providing files, links (web addresses), and/or entering a description.

File name(s): Email files to natalie@cuwcc.org: http://www.prcity.com/government/departments/publicworks/water/pdf/2009_CC_ORD_956.pdf

Web address(s) URL: comma-separated list:

Enter a description: We have a Water Conservation and Water Shortage Contingency Plan Ordinance No. 956, adopted in June of 2009. A copy of this ordinance can be found at pasowater.com at the link above. This ordinance is detailed in the city's 2010 Urban Water Management Plan. This is a comprehensive ordinance to prevent water waste at all times and during shortage conditions.

The fields in red are required.

Agency name: City of Paso Robles

Reporting unit name (District name): City of Paso Robles

Reporting unit number: 7051

Primary contact:

First name: Keith

Last name: Larson

Email: klarson@prcity.com

You must enter the reporting unit number that we have on record for your agency. Click here to open a table to obtain this number.

Link to FAQs

View MOU

2009 BMP 1.2 Water Loss Control

AWWA Water Audit

Agency to complete a Water Audit & Balance Using The AWWA Software ⦿ Yes ○ No

Email to natalie@cuwcc.org - Worksheets (AWWA Water Audit). Enter the name of the file below:

CityofPasoRobles-AWWA-WaterAudit(2009)

Water Audit Validity Score from AWWA spreadsheet: 51

Agency Completed Training In The AWWA Water Audit Method ○ Yes ⦿ No

Agency Completed Training In The Component Analysis Process ○ Yes ⦿ No

Completed/Updated the Component Analysis (at least every 4 years)? ○ Yes ○ No

Component Analysis Completed/Updated Date

Water Loss Performance

Agency Repaired All Reported Leaks & Breaks To The Extent Cost Effective ○ Yes ○ No

Recording Keeping Requirements:

Date/Time Leak Reported	Leak Location
Type of Leaking Pipe Segment or Fitting	Leak Running Time From Report to Repair
Leak Volume Estimate	Cost of Repair

Agency Located and Repaired Unreported Leaks to the Extent Cost Effective ○ Yes ○ No

Type of Program Activities Used to Detect Unreported Leaks

Annual Summary Information

Complete the following table with annual summary information (required for reporting years 2-5 only)

Total Leaks Repaired	Economic Value Of Real Loss	Economic Value Of Apparent Loss	Miles Of System Surveyed For Leaks	Pressure Reduction Undertaken for loss reduction	Cost Of Interventions	Water Saved (AF/Year)

Comments:

AWWA WLCC Free Water Audit Software: Reporting Worksheet

Copyright © 2010, American Water Works Association. All Rights Reserved.

WAS v4.2

Back to Instructions

Click to access definition

Water Audit Report for: City of Paso Robles

Reporting Year: 2009 | 1/2009 - 12/2009

Please enter data in the white cells below. Where available, metered values should be used; if metered values are unavailable please estimate a value. Indicate your confidence in the accuracy of the input data by grading each component (1-10) using the drop-down list to the left of the input cell. Hover the mouse over the cell to obtain a description of the grades

All volumes to be entered as: MILLION GALLONS (US) PER YEAR

WATER SUPPLIED

<< Enter grading in column 'E'

Volume from own sources:	6	2,170.756	Million gallons (US)/yr (MG/Yr)
Master meter error adjustment (enter positive value):	6	0.100	under-registered MG/Yr
Water imported:	n/a	0.000	MG/Yr
Water exported:	n/a	0.000	MG/Yr
WATER SUPPLIED:		2,170.856	MG/Yr

AUTHORIZED CONSUMPTION

Click here: for help using option buttons below

				Pcnt:	Value:
Billed metered:	6	1,986.539	MG/Yr		
Billed unmetered:	n/a	0.000	MG/Yr		
Unbilled metered:	n/a	0.000	MG/Yr		
Unbilled unmetered:		27.136	MG/Yr	1.25%	

Default option selected for Unbilled unmetered - a grading of 5 is applied but not displayed

AUTHORIZED CONSUMPTION:	2,013.675	MG/Yr

Use buttons to select percentage of water supplied OR value

WATER LOSSES (Water Supplied - Authorized Consumption)

157.181 MG/Yr

Apparent Losses

				Pcnt:	Value:
Unauthorized consumption:		5.427	MG/Yr	0.25%	
Customer metering inaccuracies:	2	104.555	MG/Yr	5.00%	
Systematic data handling errors:	5	0.100	MG/Yr		
Apparent Losses:		110.082			

Default option selected for unauthorized consumption - a grading of 5 is applied but not displayed

Choose this option to enter a percentage of billed metered consumption. This is NOT a default value

Real Losses (Current Annual Real Losses or CARL)

Real Losses = Water Losses - Apparent Losses:	47.099	MG/Yr
WATER LOSSES:	157.181	MG/Yr

NON-REVENUE WATER

NON-REVENUE WATER:	184.317	MG/Yr

= Total Water Loss + Unbilled Metered + Unbilled Unmetered

SYSTEM DATA

Length of mains:	7	160.0	miles
Number of active AND inactive service connections:	6	10,800	
Connection density:		68	conn./mile main
Average length of customer service line:	10	5.0	ft (pipe length between curbstop and customer meter or property boundary)
Average operating pressure:	3	70.0	psi

COST DATA

Total annual cost of operating water system:	3	$5,000,000	$/Year
Customer retail unit cost (applied to Apparent Losses):	6	$1.32	$/100 cubic feet (ccf)
Variable production cost (applied to Real Losses):	3	$300.00	$/Million gallons

PERFORMANCE INDICATORS

Financial Indicators

Non-revenue water as percent by volume of Water Supplied:	8.5%
Non-revenue water as percent by cost of operating system:	4.3%
Annual cost of Apparent Losses:	$194,249
Annual cost of Real Losses:	$14,130

Operational Efficiency Indicators

Apparent Losses per service connection per day:	27.93	gallons/connection/day
Real Losses per service connection per day*:	11.95	gallons/connection/day
Real Losses per length of main per day*:	N/A	
Real Losses per service connection per day per psi pressure:	0.17	gallons/connection/day/psi
Unavoidable Annual Real Losses (UARL):	65.47	million gallons/year
From Above, Real Losses = Current Annual Real Losses (CARL):	47.10	million gallons/year
Infrastructure Leakage Index (ILI) [CARL/UARL]:	0.72	

* only the most applicable of these two indicators will be calculated

WATER AUDIT DATA VALIDITY SCORE:

***** YOUR SCORE IS: 51 out of 100 *****

A weighted scale for the components of consumption and water loss is included in the calculation of the Water Audit Data Validity Score

PRIORITY AREAS FOR ATTENTION:

Based on the information provided, audit accuracy can be improved by addressing the following components:

1: Volume from own sources

2: Customer metering inaccuracies

3: Total annual cost of operating water system

For more information, click here to see the Grading Matrix worksheet

The fields in red are required.

Agency name: City of Paso Robles

Reporting unit name (District name): City of Paso Robles

Reporting unit number: 7051

Primary contact:

First name: Keith

Last name: Larson

Email: klarson@prcity.com

You must enter the reporting unit number that we have on record for your agency. Click here to open a table to obtain this number.

Link to FAQs

View MOU

2010 BMP 1.2 Water Loss Control

AWWA Water Audit

Agency to complete a Water Audit & Balance Using The AWWA Software ⦿ Yes ○ No

Email to natalie@cuwcc.org - Worksheets (AWWA Water Audit). Enter the name of the file below:

Water Audit Validity Score from AWWA spreadsheet: 51

Agency Completed Training In The AWWA Water Audit Method ○ Yes ⦿ No

Agency Completed Training In The Component Analysis Process ○ Yes ⦿ No

Completed/Updated the Component Analysis (at least every 4 years)? ○ Yes ⦿ No

Component Analysis Completed/Updated Date

Water Loss Performance

Agency Repaired All Reported Leaks & Breaks To The Extent Cost Effective ⦿ Yes ○ No

Recording Keeping Requirements:

Date/Time Leak Reported	Leak Location
Type of Leaking Pipe Segment or Fitting	Leak Running Time From Report to Repair
Leak Volume Estimate	Cost of Repair

Agency Located and Repaired Unreported Leaks to the Extent Cost Effective ⦿ Yes ○ No

Type of Program Activities Used to Detect Unreported Leaks

Annual Summary Information

Complete the following table with annual summary information (required for reporting years 2-5 only)

Total Leaks Repaired	Economic Value Of Real Loss	Economic Value Of Apparent Loss	Miles Of System Surveyed For Leaks	Pressure Reduction Undertaken for loss reduction	Cost Of Interventions	Water Saved (AF/Year)

Comments:

AWWA WLCC Free Water Audit Software: Reporting Worksheet

Copyright © 2010, American Water Works Association. All Rights Reserved WAS v4.2

Back to Instructions

Click to access definition

Water Audit Report for: City of Paso Robles
Reporting Year: 2009 | 1/2009 - 12/2009

Please enter data in the white cells below. Where available, metered values should be used; if metered values are unavailable please estimate a value. Indicate your confidence in the accuracy of the input data by grading each component (1-10) using the drop-down list to the left of the input cell. Hover the mouse over the cell to obtain a description of the grades

All volumes to be entered as: MILLION GALLONS (US) PER YEAR

WATER SUPPLIED

<< Enter grading in column 'E'

Volume from own sources:	6	2,061.437	Million gallons (US)/yr (MG/Yr)	
Master meter error adjustment (enter positive value):	6	0.100	under-registered	MG/Yr
Water imported:	n/a	0.000	MG/Yr	
Water exported:	n/a	0.000	MG/Yr	
WATER SUPPLIED:		2,061.537	MG/Yr	

AUTHORIZED CONSUMPTION

Click here: for help using option buttons below

				Pcnt:	Value:
Billed metered:	6	1,873.268	MG/Yr		
Billed unmetered:	n/a	0.000	MG/Yr		
Unbilled metered:	n/a	0.000	MG/Yr		
Unbilled unmetered:		25.769	MG/Yr	1.25%	

Default option selected for Unbilled unmetered - a grading of 5 is applied but not displayed

AUTHORIZED CONSUMPTION: 1,899.037 MG/Yr

Use buttons to select percentage of water supplied OR value

WATER LOSSES (Water Supplied - Authorized Consumption) 162.500 MG/Yr

Apparent Losses

				Pcnt:	Value:
Unauthorized consumption:		5.154	MG/Yr	0.25%	
Customer metering inaccuracies:	2	98.593	MG/Yr	5.00%	
Systematic data handling errors:	5	0.100	MG/Yr		
Apparent Losses:		103.847			

Default option selected for unauthorized consumption - a grading of 5 is applied but not displayed

Choose this option to enter a percentage of billed metered consumption. This is NOT a default value

Real Losses (Current Annual Real Losses or CARL)

Real Losses = Water Losses - Apparent Losses: 58.653 MG/Yr

WATER LOSSES: 162.500 MG/Yr

NON-REVENUE WATER

NON-REVENUE WATER: 188.269 MG/Yr

= Total Water Loss + Unbilled Metered + Unbilled Unmetered

SYSTEM DATA

Length of mains:	7	160.0	miles
Number of active AND inactive service connections:	6	10,800	
Connection density:		68	conn./mile main
Average length of customer service line:	10	5.0	ft (pipe length between curbstop and customer meter or property boundary)
Average operating pressure:	3	70.0	psi

COST DATA

Total annual cost of operating water system:	3	$5,000,000	$/Year
Customer retail unit cost (applied to Apparent Losses):	6	$1.32	$/100 cubic feet (ccf)
Variable production cost (applied to Real Losses):	3	$300.00	$/Million gallons

PERFORMANCE INDICATORS

Financial Indicators

Non-revenue water as percent by volume of Water Supplied:	9.1%
Non-revenue water as percent by cost of operating system:	4.2%
Annual cost of Apparent Losses:	$103,247
Annual cost of Real Losses:	$17,596

Operational Efficiency Indicators

Apparent Losses per service connection per day:	26.34	gallons/connection/day
Real Losses per service connection per day*:	14.88	gallons/connection/day
Real Losses per length of main per day*:	N/A	
Real Losses per service connection per day per psi pressure:	0.21	gallons/connection/day/psi
Unavoidable Annual Real Losses (UARL):	65.47	million gallons/year
From Above, Real Losses = Current Annual Real Losses (CARL):	58.65	million gallons/year
Infrastructure Leakage Index (ILI) [CARL/UARL]:	0.90	

* only the most applicable of these two indicators will be calculated

WATER AUDIT DATA VALIDITY SCORE:

***** YOUR SCORE IS: 51 out of 100 *****

A weighted scale for the components of consumption and water loss is included in the calculation of the Water Audit Data Validity Score

PRIORITY AREAS FOR ATTENTION:

Based on the information provided, audit accuracy can be improved by addressing the following components:

1: Volume from own sources
2: Customer metering inaccuracies
3: Total annual cost of operating water system

For more information, click here to see the Grading Matrix worksheet

	Grading										
	n/a	1	2	3	4	5	6	7	8	9	10
Improvements to attain higher data grading for "Number of Active and Inactive customer service connections" component:		to qualify for 2: Draft new policy and procedures for permitting and billing. Research and collect paper records of installations & abandonments for several years prior to audit year.	to qualify for 4: Refine policy and procedures for permitting and billing. Research computerized recordkeeping system (Customer Information System or Customer Billing System) to improve documentation format for service connections.		to qualify for 6: Refine procedures to ensure consistency with permitting policy to establish new service connections or decommission existing connections. Improve process to include all totals for at least five years prior to audit year.		Formalize regular review of permitting policy and procedures. Launch random field checks of limited number of locations. Develop reports and auditing mechanisms for computerized information management system.		to qualify for 10: Close any procedural loopholes that allow installations to go undocumented. Link computerized information management system with Geographic Information System (GIS) and formalize field inspection and information system auditing processes. Documentation of new or decommissioned service connections encounters several levels of checks and balances.		to maintain 10: Continue with standardization and random field validation to improve knowledge of system.
Average length of customer service line:	Note: if customer water meters are located outside of the customer building next to the curbstop or boundary separating utility/customer responsibility, follow the grading description for 10(a). Also see the Service Connection Diagram worksheet.	Gradings 1-9 apply if customer properties are unmetered, if customer meters exist and are located inside the customer building premises, or if the water utility owns and is responsible for the entire service connection piping from the water main to the customer building. In any of these cases the average distance between the curbstop or boundary separating utility/customer responsibility for service connection piping, and the typical first point of use (ex. faucet) or the customer meter must be quantified. Gradings of 1-9 are used to grade the validity of the means to quantify this value (See the "Service Connection Diagram" worksheet)									Either of two conditions can be met to obtain a grading of 10: a) The customer water meter is located outside of the customer building adjacent to the curbstop or boundary separating utility/customer responsibility for the service connection piping. In this case enter a value of zero in the Reporting Worksheet with a grading of 10. b) Customer water meters are located inside customer buildings, or the properties are unmetered. In either case the distance is highly reliable since data is drawn from a Geographic Information System (GIS) and confirmed by routine field checks.
		Vague policy exists to define the delineation of water utility ownership and customer ownership of the service connection piping. Curbstops are perceived as the breakpoint but these have not been well-maintained or documented. Most are buried or obscured. Their location varies widely from site-to-site, and estimating this distance is arbitrary due to the unknown location of many curbstops.	Policy requires that the curbstop serves as the delineation point between water utility ownership and customer ownership of the service connection piping. The piping from the water main to the curbstop is the property of the water utility, and the piping from the curbstop to the customer building is owned by the customer. Curbstop locations are not well documented and the average distance is based upon a limited number of locations measured in the field.	Conditions between 2 and 4	Good policy requires that the curbstop serves as the delineation point between water utility ownership and customer ownership of the service connection piping. Curbstops are generally installed as needed and are reasonably documented. Their location varies widely from site-to-site, and an estimate of this distance is hindered by the availability of paper records.	Conditions between 4 and 6	Clear policy exists to define utility/customer responsibility for service connection piping. Accurate, well-maintained paper or basic electronic recordkeeping system exists. Periodic field checks confirm piping lengths for a sample of customer properties.	Conditions between 6 and 8	Clearly worded policy standardizes the location of curbstops and meters, which are inspected upon installation. Accurate and well maintained electronic records exist with periodic field checks to confirm locations of service lines, curbstops and customer meter pits. An accurate number of customer properties from the customer billing system allows for reliable averaging of this length.	Conditions between 8 and 10	
Improvements to attain higher data grading for "Average Length of Customer Service Line" component:		to qualify for 2: Research and collect paper records of service line installations. Inspect several sites in the field using pipe locators to locate curbstops. Obtain the length of this small sample of connections in this manner.	to qualify for 4: Formalize and communicate policy delineating utility/customer responsibilities for service connection piping. Assess accuracy of paper records by field inspection of a small sample of service connections using pipe locators as needed. Research the potential migration to a computerized information management system to store service connection data.		to qualify for 6: Establish coherent procedures to ensure that policy for curbstop, meter installation and documentation is followed. Gain consensus within the water utility for the establishment of a computerized information management system.		to qualify for 8: Implement an electronic means of recoidkeeping, typically via a customer information system or customer billing system. Standardize the process to conduct field checks of limited number of locations.		to qualify for 10: Link customer information management system and Geographic Information System (GIS), standardize process for field verification of data.		to maintain 10: Continue with standardization and random field validation to improve knowledge of system.
Average operating pressure:		Available records are poorly assembled and maintained paper records of supply pump characteristics and water distribution system operating conditions. Average pressure is guesstimated based upon this information and ground elevations from crude topographical maps. Widely varying distribution system pressures due to undulating terrain, high system head loss and weak/erratic pressure controls further compromise the validity of the average pressure calculation.	Limited telemetry monitoring of scattered sites provides some static pressure data, which is recorded in handwritten logbooks. Pressure data is gathered at individual sites only when low pressure complaints arise. Average pressure is determined by averaging relatively crude data, and is affected by significant variation in ground elevations, system head loss and gaps in pressure controls in the distribution system.	Conditions between 2 and 4	Effective pressure controls separate different pressure zones, moderate pressure variation across the system, occasional open boundary valves are discovered that breech pressure zones. Basic telemetry monitoring of the distribution system logs pressure data electronically. Pressure data gathered by gauges or dataloggers at fire hydrants or buildings when low pressure complaints arise, and during fire flow tests and system flushing. Reliable topographical data exists. Average pressure is calculated using this mix of data.	Conditions between 4 and 6	Reliable pressure controls separate distinct pressure zones, only very occasional open boundary valves are encountered that breech pressure zones. Well-covered telemetry monitoring of the distribution system logs extensive pressure data electronically. Pressure gathered by gauges/dataloggers at fire hydrants and buildings when low pressure complaints arise, and during fire flow tests and system flushing. Average pressure is determined by using this mix of reliable data.	Conditions between 6 and 8	Well-managed, discrete pressure zones exist with generally predictable pressure fluctuations. A current full-scale SCADA System exists to monitor the water distribution system and collect data, including real time pressure readings at representative sites across the system. The average system pressure is determined from reliable SCADA System data.	Conditions between 8 and 10	Well-managed pressure districts/zones, SCADA System and hydraulic model exist to give very precise pressure data across the water distribution system. Average system pressure is reliably calculated from extensive, reliable, and cross-checked data.

Grading											
	n/a	1	2	3	4	5	6	7	8	9	10
Improvements to attain higher data grading for "Average Operating Pressure" component:		to qualify for 2: Employ pressure gauging and/or datalogging equipment to obtain pressure measurements from fire hydrants. Locate accurate topographical maps of service area in order to confirm ground elevations. Research pump data sheets to find pump pressure/flow characteristics	to qualify for 4 Formalize a procedure to use pressure gauging/datalogging equipment to gather pressure data during various system events such as low pressure complaints, or operational testing. Gather pump pressure and flow data at different flow regimes. Identify faulty pressure controls (pressure reducing valves, altitude valves, partially open boundary valves) and plan to properly configure pressure zones. Make all pressure data from these efforts available to generate system-wide average pressure.		to qualify for 6: Expand the use of pressure gauging/datalogging equipment to gather scattered pressure data at a representative set of sites, based upon pressure zones or areas. Utilize pump pressure and flow data to determine supply head entering each pressure zone or district. Correct any faulty pressure controls (pressure reducing valves, altitude valves, partially open boundary valves) to ensure properly configured pressure zones. Use expanded pressure dataset from these activities to generate system-wide average pressure.		to qualify for 8: Install a Supervisory Control and Data Acquisition (SCADA) System to monitor system parameters and control operations. Set regular calibration schedule for instrumentation to insure data accuracy. Obtain accurate topographical data and utilize pressure data gathered from field surveys to provide extensive, reliable data for pressure averaging.		to qualify for 10: Obtain average pressure data from hydraulic model of the distribution system that has been calibrated via field measurements in the water distribution system and confirmed in comparisons with SCADA System data.		to maintain 10: Continue to refine the hydraulic model of the distribution system and consider linking it with SCADA System for real-time pressure data calibration, and averaging.

	Grading										
	n/a	1	2	3	4	5	6	7	8	9	10
	COST DATA										
Total annual cost of operating water system:		Incomplete paper records and lack of documentation on many operating functions making calculation of water system operating costs a pure guesstimate	Reasonably maintained, but incomplete, paper or electronic accounting provides data to estimate the major portion of water system operating costs	Conditions between 2 and 4	Electronic, industry-standard cost accounting system in place. Gaps in data known to exist, periodic internal reviews conducted but not a structured audit	Conditions between 4 and 6	Reliable electronic, industry-standard cost accounting system in place, with all pertinent water system operating costs tracked. Data audited periodically by utility personnel, not a Certified Public Accountant (CPA)	Conditions between 6 and 8	Reliable electronic, industry-standard cost accounting system in place, with all pertinent water system operating costs tracked. Data audited at least annually by utility personnel, and periodically by third-party CPA	Conditions between 8 and 10	Reliable electronic, industry-standard cost accounting system in place, with all pertinent water system operating costs tracked. Data audited annually by utility personnel and by third-party CPA
Improvements to attain higher data grading for "Total Annual Cost of Operating the Water System" component:		to qualify for 2: Gather available records, institute new procedures to regularly collect and audit basic cost data of most important operations functions	to qualify for 4: Implement an electronic cost accounting system, structured according to accounting standards for water utilities		to qualify for 6: Establish process for periodic internal audit of water system operating costs; identify cost data gaps and institute procedures for tracking these outstanding costs.		to qualify for 8: Standardize the process to conduct routine financial audit on an annual basis		to qualify for 10: Standardize the process to conduct a third-party financial audit by a CPA on an annual basis.		to maintain 10: Maintain program, stay abreast of expenses subject to erratic cost changes and budget/track costs proactively
Customer retail unit cost (applied to Apparent Losses)		Antiquated, cumbersome water rate structure is use, with periodic historic amendments that were poorly documented and implemented, resulting in classes of customers being billed inconsistent charges. The actual composite billing rate likely differs significantly from the published water rate structure, but a lack of auditing leaves the degree of error indeterminate	Dated, cumbersome water rate structure, not always employed consistently in actual billing operations. The actual composite billing rate is known to differ from the published water rate structure, and a reasonably accurate estimate of the degree of error is determined allowing a composite billing rate to be quantified.	Conditions between 2 and 4	Straight-forward water rate structure in use, but not updated in several years. Billing operations reliably employ the rate structure. The composite billing rate is derived from a single customer class such as residential customer accounts, neglecting the effect of different rates from varying customer classes	Customer population unmetered Fixed fee charged, single composite number derived from multiple customer classes	Clearly written, up-to-date water rate structure is in force and is applied reliably in billing operations. Composite customer rate is determined using a weighted average residential rate using volumes of water in each rate block.	Conditions between 6 and 8	Effective water rate structure is in force and is applied reliably in billing operations. Composite customer rate is determined using a weighted average composite consumption rate, including residential, commercial, industrial and any other customer classes within the water rate structure	Conditions between 8 and 10	Third party reviewed weighted average composite consumption rate (includes residential, commercial, industrial, etc.)
Improvements to attain higher data grading for "Customer Retail Unit Cost" component:		to qualify for 2: Formalize the process to implement water rates, including a secure documentation procedure. Create a current, formal water rate document and gain approval from all stakeholders.	to qualify for 4: Review the water rate structure and update/formalize as needed. Assess billing operations to ensure that actual billing operations incorporate the established water rate structure.		to qualify for 6: Evaluate volume of water used in each usage block by residential users. Multiply volumes by full rate structure.	Meter customers and charge rates based upon water volumes	to qualify for 8: Evaluate volume of water used in each usage block by all classifications of users. Multiply volumes by full rate structure		to qualify for 10: Conduct a periodic third-party audit of water used in each usage block by all classifications of users. Multiply volumes by full rate structure.		to maintain 10: Keep water rate structure current in addressing the water utility's revenue needs. Update the calculation of the customer unit rate as new rate components, customer classes, or other components are modified.
Variable production cost (applied to Real Losses)	Note: if the water utility purchases/imports its entire water supply, then enter the unit purchase cost of the bulk water supply in the Reporting Worksheet with a grading of 10	Incomplete paper records and lack of documentation on primary operating functions (electric power and treatment costs most importantly) makes calculation of variable production costs a pure guesstimate	Reasonably maintained but incomplete, paper or electronic accounting provides data to roughly estimate the basic operations costs (pumping power costs and treatment costs) and calculate a unit variable production cost	Conditions between 2 and 4	Electronic, industry-standard cost accounting system in place. Electric power and treatment costs are reliably tracked and allow accurate calculation of unit variable production costs based on these two inputs only. All costs are audited internally on a periodic basis	Conditions between 4 and 6	Reliable electronic, industry-standard cost accounting system in place, with all pertinent water system operating costs tracked. Pertinent additional costs beyond power and treatment (ex: liability, residuals management, etc.) are included in the unit variable production cost. Data audited at least annually by utility personnel	Conditions between 6 and 8	Reliable electronic, industry-standard cost accounting system in place, with all pertinent variable production costs tracked. Data audited at least annually by utility personnel, and periodically by third-party	Conditions between 8 and 10	Either of two conditions can be met to obtain a grading of 10 1) Third party CPA audit of all primary and secondary cost components on an annual basis or 2) Water supply is entirely purchased as bulk imported water, and unit purchase cost serves as the variable production cost.
Improvements to attain higher data grading for "Variable Production Cost" component:		to qualify for 2: Gather available records, institute new procedures to regularly collect and audit basic cost data and most important operations functions.	to qualify for 4: Implement an electronic cost accounting system, structured according to accounting standards for water utilities		to qualify for 6: Formalize process for regular internal audits of production costs. Assess whether additional costs (liability, residuals management, etc.) should be included to calculate a more accurate variable production cost.		to qualify for 8: Formalize the accounting process to include primary cost components (power, treatment) as well as secondary components (liability, residuals management, etc.) Conduct periodic third-party audits.		to qualify for 10: Standardize the process to conduct a third-party financial audit by a CPA on an annual basis.		to maintain 10: Maintain program, stay abreast of expenses subject to erratic cost changes and budget/track costs proactively

The fields in red are required.

Agency name: City of Paso Robles

Reporting unit name (District name): City of Paso Robles

Reporting unit number: 7051

Primary contact:

First name: Keith

Last name: Larson

Email: klarson@prcity.com

You must enter the reporting unit number that we have on record for your agency. Click here to open a table to obtain this number.

BMP 1.3 Metering with Commodity

Link to FAQs

See the complete MOU: View MOU

2009

See the coverage requirements for this BMP:

Implementation

Does your agency have any unmetered service connections? ○ Yes ⊙ No

If YES, has your agency completed a meter retrofit plan? ○ Yes ○ No

Enter the number of previously unmetered accounts fitted with meters during reporting year:

Are all new service connections being metered? ⊙ Yes ○ No

Are all new service connections being billed volumetrically? ⊙ Yes ○ No

Has your agency completed and submitted electronically to the Council a written plan, policy or program to test, repair and replace meters? ○ Yes ⊙ No

Please Fill Out The Following Matrix

Account Type	# Metered Accounts	# Metered Accounts Read	# Metered Accounts Billed by Volume	Billing Frequency Per Year	# of estimated bills/yr
Single-Family	8,610	8,610		Monthly	0
Multi-Family	378	378		Monthly	0
Commercial	752	752		Monthly	0
Industrial	70	70		Monthly	0
Dedicated Irrigatic	376	376		Monthly	0
Other	80	80		Monthly	0
Other				Other	
Other				Other	
Other				Other	
Other				Other	

Number of CII Accounts with Mixed-use Meters: 0

Number of CII Accounts with Mixed-use Meters Retrofitted with Dedicated Irrigation Meters during Reporting Period: 0

Feasibility Study

Has your agency conducted a feasibility study to assess the merits of a program to provide incentives to switch mixed-use accounts to dedicated landscape meters? ○ Yes ⊙ No

If YES, please fill in the following information:

A. When was the Feasiblity Study conducted

B. Email or provide a link to the feasibility study (or description of):

File name(s): Email files to natalie@cuwcc.org Enter the file name here e.g. WaterWastePreventionOrdinance

Web address(s) URL: comma-separated list Enter the URL to your documentation.

General Comments about BMP 1.3:

The fields in red are required.

Agency name: City of Paso Robles

Reporting unit name (District name): City of Paso Robles

Reporting unit number: 7051

Primary contact:

First name: Keith

Last name: Larson

Email: klarson@prcity.com

You must enter the reporting unit number that we have on record for your agency. Click here to open a table to obtain this number.

BMP 1.3 Metering with Commodity

2010

Link to FAQs

See the complete MOU: View MOU

See the coverage requirements for this BMP:

Implementation

Does your agency have any unmetered service connections? ○ Yes ⊙ No

If YES, has your agency completed a meter retrofit plan? ○ Yes ○ No

Enter the number of previously unmetered accounts fitted with meters during reporting year:

Are all new service connections being metered? ⊙ Yes ○ No

Are all new service connections being billed volumetrically? ⊙ Yes ○ No

Has your agency completed and submitted electronically to the Council a written plan, policy or program to test, repair and replace meters? ○ Yes ⊙ No

Please Fill Out The Following Matrix

Account Type	# Metered Accounts	# Metered Accounts Read	# Metered Accounts Billed by Volume	Billing Frequency Per Year	# of estimated bills/yr
Single-Family	8,661	8,661	8,661	Monthly	0
Multi-Family	401	401	401	Monthly	0
Commericial	752	752	752	Monthly	0
Industrial	71	71	71	Monthly	0
Dedicated Irrigatic	379	379	379	Monthly	0
Other	12	12	12	Monthly	0
Other				Other	
Other				Other	
Other				Other	
Other				Other	

Number of CII Accounts with Mixed-use Meters: 0

Number of CII Accounts with Mixed-use Meters Retrofitted with Dedicated Irrigation Meters during Reporting Period: 0

Feasibility Study

Has your agency conducted a feasibility study to assess the merits of a program to provide incentives to switch mixed-use accounts to dedicated landscape meters? ○ Yes ⊙ No

If YES, please fill in the following information:

A. When was the Feasiblity Study conducted

B. Describe, upload or provide an electronic link to the Feasibility Study Upload File

File name(s): Email files to natalie@cuwcc.org

Web address(s) URL: comma-separated list

Comments:

The fields in red are required.

Agency name: City of Paso Robles

Reporting unit name (District name): City of Paso Robles

Reporting unit number: 7051

Primary contact:

First name: Keith

Last name: Larson

Email: klarson@prcity.com

You must enter the reporting unit number that we have on record for your agency. Click here to open a table to obtain this number.

CUWCC

BMP 1.4 Retail Conservation Pricing

Link to FAQs

View MOU

If you are reporting more rate structures than this form allows, add the structures to a spreadsheet and send the file to natalie@cuwcc.org.

2009

Implementation (Water Rate Structure)

Enter the Water Rate Structures that are assigned to the majority of your customers, by customer class

Rate Structure	Customer Class	Total Revenue Commodity Charges	Total Revenue Customer Meter/Service (Fixed Charges)
Uniform	Other	3,505,657.10	2,190,455.00
Select a Rate Struc	Other		
Select a Rate Struc	Other		
Select a Rate Struc	Other		
Select a Rate Struc	Other		
Select a Rate Struc	Other		
Select a Rate Struc	Other		

Implementation Option (Conservation Pricing Option)

- (•) Use Annual Revenue As Reported
- ( ) Use Canadian Water & Wastewater Association Rate Design Model

If CWWA is select, enter the file name and email the spreadsheet to natalie@cuwcc.org

Retail Waste Water (Sewer) Rate Structure by Customer Class

Agency Provide Sewer Service (•) Yes ( ) No

Select the Retail Waste Water(Sewer) Rate Structure assigned to the majority of your customers within a specific customer class.

Rate Structure	Customer Class	Total Revenue Commodity Charges	Total Revenue Customer Meter/Service (Fixed Charges)
Non-Volumetric Fla	Single-Family		
Uniform	Commercial		
Uniform	Industrial		
Select a Rate Struc	Other		
Select a Rate Struc	Other		
Select a Rate Struc	Other		
Select a Rate Struc	Other		

Comments:

The fields in red are required.

Agency name: City of Paso Robles

Reporting unit name (District name): City of Paso Robles

Reporting unit number: 7051

Primary contact:

First name: Keith

Last name: Larson

Email: klarson@prcity.com

You must enter the reporting unit number that we have on record for your agency. Click here to open a table to obtain this number.

CUWCC 2010

BMP 1.4 Retail Conservation Pricing

Link to FAQs

View MOU

If you are reporting more rate structures than this form allows, add the structures to a spreadsheet and send the file to natalie@cuwcc.org.

Implementation (Water Rate Structure)

Enter the Water Rate Structures that are assigned to the majority of your customers, by customer class

Rate Structure	Customer Class	Total Revenue Commodity Charges	Total Revenue Customer Meter/Service (Fixed Charges)
Uniform	Other	3,305,854.00	2,246,000.00
Uniform Seasonal	Other		
Uniform	Other		
Uniform	Other		
Uniform	Other		
Uniform	Other		
Uniform	Other		

Implementation Option (Conservation Pricing Option)

- (•) Use Annual Revenue As Reported
- ( ) Use Canadian Water & Wastewater Association Rate Design Model

If CWWA is select, enter the file name and email the spreadsheet to natalie@cuwcc.org

Retail Waste Water (Sewer) Rate Structure by Customer Class

Agency Provide Sewer Service (•) Yes ( ) No

Select the Retail Waste Water(Sewer) Rate Structure assigned to the majority of your customers within a specific customer class.

Rate Structure	Customer Class	Total Revenue Commodity Charges	Total Revenue Customer Meter/Service (Fixed Charges)
Non-Volumetric Fla	Single-Family		
Uniform	Commercial		
Uniform	Industrial		
Select a Rate Struc	Other		
Select a Rate Struc	Other		
Select a Rate Struc	Other		
Select a Rate Struc	Other		

Comments:

The fields in red are required.

Agency name: City of Paso Robles

Reporting unit name (District name):

Reporting unit number: 7051

Primary contact:

First name: Keith

Last name: Larson

Email: klarson@prcity.com

Click here to open a table that displays your agency name reporting unit name and reporting unit number. Please ensure that you enter the correct information.

Link to FAQs

View MOU

2009 BMP 2.1 Public Outreach - Retail Reporting

Is a Wholesale Agency Performing Public Outreach?

Are there one or more wholesale agencies performing public outreach which can be counted to help your agency comply with the BMP? ○ Yes ◉ No

Enter the name(s) of the wholesale agency (comma delimited)

Is your agency performing public outreach?

Report a minimum of 4 water conservation related contacts your agency had with the public during the year.

Public Information Programs List

Did at least one contact take place during each quarter of the reporting year? ☑

Number of Public Contacts	Public Information Programs
100,000	Newsletter articles on conservation
1	Landscape water conservation media campaigns
2,500	Website
10,000	Newsletter articles on conservation
	Select a public contact

Contact with the Media

Are there one or more wholesale agencies performing media outreach which can be counted to help your agency comply with the BMP? ○ Yes ○ No

Enter the name(s) of the wholesale agency (comma delimited)

OR Retail Agency (Contacts with the Media)

Did at least one contact take place during each quarter of the reporting year? ☐

Media Contacts List

Number of Media Contacts	Did at least one contact take place during each quarter of the reporting year?	Media Contact Types
12		Radio contacts
3		Articles or stories resulting from outreach
4		Newspaper contacts
2		Television contacts
1		Written editorials
		Select a type of media contact

Is a Wholesale Agency Performing Website Updates?

Did one or more CUWCC wholesale agencies agree to assume your agency's responsibility for meeting the requirements of and for CUWCC reporting of this BMP? ○Yes ⊙No

Enter the name(s) of the wholesale agency (comma delimited)

Is Your Agency Performing Website Updates?

Enter your agency's URL (website address): www.prcity.com/government/departments/publicworks/water/conservation/index.asp

Describe a minimum of four water conservation related updates to your agency's website that took place during the year: Made several changes to the website in 2009, added significant content on Level 2 water use restrictions and water conservation techniques.

Did at least one Website Update take place during each quarter of the reporting year? ⊙Yes ○No

Public Outreach Annual Budget

Enter budget for public outreach programs. You may enter total budget in a single line or brake the budget into discrete categories by entering many rows. Please indicate if personnel costs are included in the entry.

Category	Amount		Personnel Costs Included? If yes, check the box.	Comments	
Outreach	$50,000		☐		
			☐		
			☐		
			☐		
			☐		
			☐		

Comments:

The fields in red are required.

Agency name: City of Paso Robles

Reporting unit name (District name):

Reporting unit number: 7051

Primary contact:

First name: Keith

Last name: Larson

Email: klarson@prcity.com

Click here to open a table that displays your agency name reporting unit name and reporting unit number. Please ensure that you enter the correct information.

Link to FAQs

View MOU

2009

BMP 2.1 Public Outreach Cont'd

Public Outreach Expenses

Enter expenses for public outreach programs. Please include the same kind of expenses you included in the question related to your budget (Section 2.1.7, above). For example, if you included personnel costs in the budget entered above, be sure to include them here as well.

Expense Category	Expense Amount	Personnel Costs Included?
		☐ If yes, check the check box.
		☐
		☐
		☐

Additional Public Information Program

Please report additional public information contacts. List these additional contacts in order of how your agency views their importance / effectiveness with respect to conserving water, with the most important/ effective listed first (where 1 = most important).

Were there additional Public Outreach efforts? ○ Yes ○ No

Public Outreach Additional Information

Public Information Programs	Importance

Social Marketing Programs

Branding

Does your agency have a water conservation "brand," "theme" or mascot? ⦿ Yes ○ No

Describe the brand, theme or mascot.

We have a water conservation logo we use in all outreach materials

Market Research

Have you sponsored or participated in market research to refine your message? ○ Yes ○ No

Market Research Topic

Brand Message

Brand Mission Statement

Community Committees

Do you have a community conservation committee? ○ Yes ⊙ No

Enter the names of the community committees:

Training

Training Type	# of Trainings	# of Attendees	Description of Other
Waterwise Landscape	$2	$60	

Social Marketing Expenditures

Public Outreach Social Marketing Expenses

Expense Category	Expense Amount	Description

Partnering Programs - Partners

Name	Type of Program
☑ CLCA?	Speak at meetings
☐ Green Building Programs?	
☐ Master Gardeners?	
☐ Cooperative Extension?	
☐ Local Colleges?	
☑ Other	San Luis Obispo County Parners in Water Conservation

☐ Retail and wholesale outlet; name(s) and type(s) of programs:

Partnering Programs - Newsletters

Number of newsletters per year

Number of customers per year

Partnering with Other Utilities

Describe other utilities your agency partners with, including electrical utilities

Conservation Gardens

Describe water conservation gardens at your agency or other high traffic areas or new

Landscape contests or awards

Describe water wise landscape contest or awards program conducted by your agency

Comments:

The fields in red are required.

Agency name: City of Paso Robles

Reporting unit name (District name): City of Paso Robles

Reporting unit number: 7051

Primary contact:

First name: Keith

Last name: Larson

Email: klarson@prcity.com

Click here to open a table that displays your agency name reporting unit name and reporting unit number. Please ensure that you enter the correct information.

CUWCC

Link to FAQs

View MOU

2010 BMP 2.1 Public Outreach - Retail Reporting

Is a Wholesale Agency Performing Public Outreach?

Are there one or more wholesale agencies performing public outreach which can be counted to help your agency comply with the BMP? ○ Yes ◉ No

Enter the name(s) of the wholesale agency (comma delimited)

Is your agency performing public outreach?

Report a minimum of 4 water conservation related contacts your agency had with the public during the year.

Public Information Programs List

Did at least one contact take place during each quarter of the reporting year? ☑

Number of Public Contacts	Public Information Programs
100,000	Flyers and/or brochures (total copies), bill stuffers, messages printed on bill, information packets
1	Landscape water conservation media campaigns
2,500	Website
10,000	Newsletter articles on conservation
	Select a public contact

Contact with the Media

Are there one or more wholesale agencies performing media outreach which can be counted to help your agency comply with the BMP? ○ Yes ◉ No

Enter the name(s) of the wholesale agency (comma delimited)

OR Retail Agency (Contacts with the Media)

Media Contacts List

Did at least one contact take place during each quarter of the reporting year? ☑

Number of Media Contacts	Did at least one contact take place during each quarter of the reporting year?	Media Contact Types
12		Radio contacts
3		Articles or stories resulting from outreach
4		Newspaper contacts
2		Television contacts
1		Written editorials
		Select a type of media contact

Is a Wholesale Agency Performing Website Updates?

Did one or more CUWCC wholesale agencies agree to assume your agency's responsibility for meeting the requirements of and for CUWCC reporting of this BMP? ○ Yes ⊙ No

Enter the name(s) of the wholesale agency (comma delimited)

Is Your Agency Performing Website Updates?

Enter your agency's URL (website address): www.pcity.com/government/departments/publicworks/water/conservation/index.asp

Describe a minimum of four water conservation related updates to your agency's website that took place during the year: Totally revamped the Conservation website this year, adding many screens and links to documents, pictures, etc.

Did at least one Website Update take place during each quarter of the reporting year? ⊙ Yes ○ No

Public Outreach Annual Budget

Enter budget for public outreach programs. You may enter total budget in a single line or brake the budget into discrete categories by entering many rows. Please indicate if personnel costs are included in the entry.

Category	Amount		Personnel Costs Included? If yes, check the box.	Comments
Outreach	$50,000		☐	
			☐	
			☐	
			☐	
			☐	
			☐	

Comments:

The fields in red are required.

Agency name: City of Paso Robles

Reporting unit name (District name): City of Paso Robles

Reporting unit number: 7051

Primary contact:

First name: Keith

Last name: Larson

Email: klarson@prcity.com

Click here to open a table that displays your agency name reporting unit name and reporting unit number. Please ensure that you enter the correct information.

Link to FAQs

View MOU

2010

BMP 2.1 Public Outreach Cont'd

Public Outreach Expenses

Enter expenses for public outreach programs. Please include the same kind of expenses you included in the question related to your budget (Section 2.1.7, above). For example, if you included personnel costs in the budget entered above, be sure to include them here as well.

Expense Category	Expense Amount	Personnel Costs Included?
		☐ If yes, check the check box.
		☐
		☐
		☐

Additional Public Information Program

Please report additional public information contacts. List these additional contacts in order of how your agency views their importance / effectiveness with respect to conserving water, with the most important/ effective listed first (where 1 = most important).

Were there additional Public Outreach efforts? ⊙ Yes ○ No

Public Outreach Additional Information

Public Information Programs	Importance

Social Marketing Programs

Branding

Does your agency have a water conservation "brand," "theme" or mascot? ⊙ Yes ○ No

Describe the brand, theme or mascot.

We have a water conservation program logo that we use in all our outreach materials.

Market Research

Have you sponsored or participated in market research to refine your message? ○ Yes ⊙ No

Market Research Topic

Brand Message

Brand Mission Statement

Community Committees

Do you have a community conservation committee? ○ Yes ⊙ No

Enter the names of the community committees:

Training

Training Type	# of Trainings	# of Attendees	Description of Other
Waterwise Landscape	$2	$60	

Social Marketing Expenditures

Public Outreach Social Marketing Expenses

Expense Category	Expense Amount	Description

Partnering Programs - Partners

Name	Type of Program
☑ CLCA?	Speak at meetings
☐ Green Building Programs?	
☐ Master Gardeners?	
☑ Cooperative Extension?	
☐ Local Colleges?	
☑ Other	San Luis Obispo County Partners in Water Conservation

☐ Retail and wholesale outlet; name(s) and type(s) of programs:

Partnering Programs - Newsletters

Number of newsletters per year

Number of customers per year

Partnering with Other Utilities

Describe other utilities your agency partners with, including electrical utilities

Atascadero Mutual Water Company, Templeton CSD partners in putting on Waterwise Landscape Workshops

Conservation Gardens

Describe water conservation gardens at your agency or other high traffic areas or new

Landscape contests or awards

Describe water wise landscape contest or awards program conducted by your agency

Comments:

The fields in red are required.

Agency name: City of Paso Robles

Reporting unit name (District name): City of Paso Robles

Reporting unit number: 7051

Primary contact:

First name: Keith

Last name: Larson

Email: klarson@prcity.com

Click here to open a table that displays your agency name reporting unit name and reporting unit number. Please ensure that you enter the correct information.

Link to FAQs

View MOU

2010

BMP 2.2 School Education Programs, Retail Agencies

School Programs

Is your agency implementing school programs which can be counted to help another agency comply with this BMP? ○Yes ⊙No

Enter Wholesaler Names, separated by commas:

☑ Materials meet state education framework requirements?

Description of Materials: Interactive presentation with worksheet and take home activity.

☐ Materials distributed to K-6 Students?

Description of materials distributed to K-6 Students: Presentation made to grades 3-6

Number of students reached: 780

☐ Materials distributed to 7-12 Students?

Description of materials distributed to 7-12 Students:

Number of Distribution:

Annual budget for school education program: $4,000.00

Description of all other water supplier education programs:

School Program Activities

Classroom presentations:

Number of presentations: 26

Number of attendees: 780

Large group assemblies:

Number of presentations:

Number of attendees:

Children's water festivals or other events:

Number of presentations:

Number of attendees:

Cooperative efforts with existing science/water education programs (various workshops, science fair awards or judging) and follow-up:

Number of presentations:

Number of attendees:

Other methods of disseminating information (i.e. themed age-appropriate classroom loaner kits):

Description

Number distributed

Staffing children's booths at events & festivals:

Number of booths: 2

Number of attendees: 1000

Water conservation contests such as poster and photo:

Description: Festival of the Arts Booth - Rain barrel painting activity
Earth Day Booth in Atascadero

Number distributed

Offer monetary awards/funding or scholarships to students:

Number Offered

Total Funding

Teacher training workshops:

Number of presentations

Number of attendees

Fund and/or staff student field trips to treatment facilities, recycling facilities, water conservation gardens, etc.:

Number of tours or field trips

Number of participants

College internships in water conservation offered:

Number of internships

Total funding

Career fairs/workshops:

Number of presentations

Number of attendees

Additional program(s) supported by agency but not mentioned above:

Description

Number of events (if applicable)

Number of participants

Total reporting period budget expenditures for school education programs (include all agency costs): $3640

Comments

Education consulting firm conducts classroom presentations.

The fields in red are required.

Agency name: City of Paso Robles

Division name (Reporting unit): City of Paso Robles

Reporting unit number: 7051

Primary contact:

First name: Keith

Last name: Larson

Email: klarson@prcity.com

CUWCC

WATER SOURCES

2009

Service Area Population: 29949

Potable Water

Own Supply Source Name	AF/YEAR	Water Supply Type	Water Supply Description
Wells	6,661.81	Groundwater	
		Other	
		Other	
		Other	
		Other	
		Other	
		Other	
		Other	
		Other	
		Other	
		Other	

Imported Supply Source Name	AF/YEAR	Water Supply Type	Water Supply Description
		Other	
		Other	
		Other	
		Other	
		Other	
		Other	
		Other	
		Other	
		Other	
		Other	
		Other	

Exported Water Name	AF/YEAR	Where Exported?

The fields in red are required.

Agency name: City of Paso Robles

Division name (Reporting unit): City of Paso Robles

Reporting unit number: 7051

Primary contact:

First name: Keith

Last name: Larson

Email: klarson@prcity.com

CUWCC

Service Area Population: 29949

2009

Non- Potable Water

If you select Other for type, enter

Own Supply Source Name	AF/YEAR	Water Supply Type	Water Supply Description
	0.00	Select a water type.	
		Select a water type.	
		Select a water type.	
		Select a water type.	
		Select a water type.	
		Select a water type.	
		Select a water type.	
		Select a water type.	
		Select a water type.	
		Select a water type.	
		Select a water type.	

Imported Supply Source Name	AF/YEAR	Water Supply Type	Water Supply Description
	0.00	Select a water type.	
		Select a water type.	
		Select a water type.	
		Select a water type.	
		Select a water type.	
		Select a water type.	
		Select a water type.	
		Select a water type.	
		Select a water type.	
		Select a water type.	
		Select a water type.	

Exported Water Name	AF/YEAR	Where Exported? such as groundwater recharge, retail,
	0.00	

The fields in red are required.

Agency name: City of Paso Robles

Division name (Reporting unit): City of Paso Robles

Reporting unit number: 7051

Primary contact:

First name: Keith

Last name: Larson

Email: klarson@prcity.com

Water Uses 2009

Potable Water Billed

Make sure to enter numbers in AF/Year.

Customer Type	Meter Accounts	Metered Water Delivered	Un-metered Accounts	Un-metered Water Delivered	Description
Single-Family	8,610.00	3,751.69			
Multi-Family	378.00	543.07			
Commercial	627.00	790.13			
Industrial	70.00	148.18			
Institutional	80.00	26.53			
Dedicated Irrigation	391.00	836.88			
Other					
Other					
Other					
Other					
Other					
Other					
Other					

Potable Water Un-Billed

Customer Type	Meter Accounts	Metered Water Delivered	Un-metered Accounts	Un-metered Water Delivered	Description
Other	0.00	0.00	0.00	0.00	
Other					
Other					
Other					
Other					
Other					
Other					
Other					
Other					
Other					
Other					
Other					
Other					

The fields in red are required.

Agency name: City of Paso Robles

Division name (Reporting unit): City of Paso Robles

Reporting unit number: 7051

Primary contact:

First name: Keith

Last name: Larson

Email: klarson@prcity.com

CUWCC

WATER SOURCES

Service Area Population: 30,072

2010

Potable Water

Own Supply Source Name	AF/YEAR	Water Supply Type	Water Supply Description
Wells	6,326.32	Groundwater	
		Other	
		Other	
		Other	
		Other	
		Other	
		Other	
		Other	
		Other	
		Other	
		Other	

Imported Supply Source Name	AF/YEAR	Water Supply Type	Water Supply Description
		Other	
		Other	
		Other	
		Other	
		Other	
		Other	
		Other	
		Other	
		Other	
		Other	
		Other	

Exported Water Name	AF/YEAR	Where Exported?

The fields in red are required.

Agency name: City of Paso Robles

Division name (Reporting unit): City of Paso Robles

Reporting unit number: 7051

Primary contact:

First name: Keith

Last name: Larson

Email: klarson@prcity.com

Water Uses 2010

Potable Water Billed

Make sure to enter numbers in AF/Year.

Customer Type	Meter Accounts	Metered Water Delivered	Un-metered Accounts	Un-metered Water Delivered	Description
Single-Family	8,661.00	3,435.00	0.00	0.00	
Multi-Family	401.00	573.00	0.00	0.00	
Commercial	676.00	656.00	0.00	0.00	
Industrial	71.00	154.00	0.00	0.00	
Institutional	76.00	91.00	0.00	0.00	
Dedicated Irrigation	391.00	840.00	0.00	0.00	
Other					
Other					
Other					
Other					
Other					
Other					
Other					

Potable Water Un-Billed

Customer Type	Meter Accounts	Metered Water Delivered	Un-metered Accounts	Un-metered Water Delivered	Description
Other	0.00	0.00	0.00	0.00	
Other					
Other					
Other					
Other					
Other					
Other					
Other					
Other					
Other					
Other					
Other					
Other					

The fields in red are required.

Agency name: City of Paso Robles

Division name (Reporting unit): City of Paso Robles

Reporting unit number: 7051

Primary contact:

First name: Keith

Last name: Larson

Email: klarson@prcity.com

Water Uses 2010

Non-Potable Billed

Customer Type	Meter Accounts	Metered Water Delivered	Un-metered Accounts	Un-metered Water Delivered	Description
Other	0.00	0.00	0.00	0.00	
Other					
Other					
Other					
Other					
Other					
Other					
Other					
Other					
Other					
Other					
Other					
Other					

Non-Potable Un-Billed

Customer Type	Meter Accounts	Metered Water Delivered	Un-metered Accounts	Un-metered Water Delivered	Description
Other	0.00	0.00	0.00	0.00	
Other					
Other					
Other					
Other					
Other					
Other					
Other					
Other					
Other					
Other					
Other					
Other					

The fields in red are required.

Agency name: City of Paso Robles

Division name (Reporting unit): City of Paso Robles

Reporting unit number: 7051

Primary contact:

First name: Keith

Last name: Larson

Email: klarson@prcity.com

CUWCC

2010

Service Area Population: 30,072

Non- Potable Water

Own Supply Source Name	AF/YEAR	Water Supply Type	If you select Other for type, enter Water Supply Description
	0.00	Select a water type.	
		Select a water type.	
		Select a water type.	
		Select a water type.	
		Select a water type.	
		Select a water type.	
		Select a water type.	
		Select a water type.	
		Select a water type.	
		Select a water type.	
		Select a water type.	

Imported Supply Source Name	AF/YEAR	Water Supply Type	Water Supply Description
	0.00	Select a water type.	
		Select a water type.	
		Select a water type.	
		Select a water type.	
		Select a water type.	
		Select a water type.	
		Select a water type.	
		Select a water type.	
		Select a water type.	
		Select a water type.	
		Select a water type.	

Exported Water Name	AF/YEAR	Where Exported? such as groundwater recharge, retail,
	0.00	

California Urban Water Conservation Council

TARGETS / COMPLIANCE
(SBx7-7)

Input cells:
Calculated cells:

Target Summary	2020	2015
Method 1	192.9	217.0
Method 2	N/A	N/A
Method 3	N/A	N/A
Method 4	0.0	0.0
	Min Value	Max Value

GPCD in 2010	
Base daily per capita water use (10-15yr baseline)	241.1
Base daily per capita water use (5yr baseline)	238.2
Max. allowable GPCD target in 2020 (95% x 5yr baseline)	226.3

Method 1: Baseline per Capita Water Use

80% x Base daily per capita water use (10-15yr baseline): 192.9

2015 Target: 217.0
2020 Target: 192.9

Method 2: Performance Standards

TM 2 Indoor Water Use allowance: 0.0
TM 6 Landscaped Area Water Use: 0.0
TM 7 Baseline CII Water Use: 0.0

2015 Target: N/A
2020 Target: N/A

Method 3: Hydrologic Region Targets

Enter the percentage of your service area population in each hydrologic region

Region	Region Name	% Population	GPCD Target
1	North Coast		137
2	San Francisco Bay		131
3	Central Coast		123
4	South Coast		149
5	Sacramento River		176
6	San Jacinto		174
7	Tulare lake		188
8	North Lahontan		173
9	South Lahontan		170
10	Colorado River		211
		0.0%	

2015 Target: N/A
2020 Target: N/A

Method 4:

To be Developed

California Urban Water Conservation Council

TARGETS / COMPLIANCE
(CUWCC MOU)

Baseline / Initial GPCD
(Use option buttons to select)

GPCD in 2006 ○	
Baseline GPCD (1997 to 2006) ◉	241.2
GPCD in 2010	
GPCD Target for 2018	197.8

Potable Water GPCD for each Year in the Baseline Period

Year	GPCD
2006	228.5
2005	236.4
2004	244.9
2003	248.3
2002	253.9
2001	238.0
2000	235.5
1999	244.0
1998	
1997	

Biennial GPCD Compliance Table

Year	Report	Target		Highest Acceptable Bound	
		% Base	GPCD	% Base	GPCD
2010	1	96.4%	232.5	100%	241.2
2012	2	92.8%	223.8	96.4%	232.5
2014	3	89.2%	215.1	92.8%	223.8
2016	4	85.6%	206.5	89.2%	215.1
2018	5	82.0%	197.8	82.0%	197.8

Monthly GPCD Data for Weather Normalization

Year	JAN	FEB	MAR	APR	MAY	JUN	JUL	AUG	SEP	OCT	NOV	DEC
2010												
Baseline avg*	124.1	116.3	147.8	194.7	290.1	347.5	386.8	378.5	331.3	269.6	168.5	138.9

* The average for each month is based on the baseline period 1997 to 2006

California Urban Water Conservation Council

CUWCC

GPCD Matrix

Year	JAN	FEB	MAR	APR	MAY	JUN	JUL	AUG	SEP	OCT	NOV	DEC	ANNUAL GPCD
2010													
2009													
2008	120.8	112.7	174.5	224.5	292.2	328.5	353.1	353.8	311.0	267.4	169.9	127.2	235.3
2007	142.4	111.9	174.9	241.2	311.3	339.6	374.1	352.9	305.4	246.4	194.6	144.6	244.9
2006	114.1	129.5	116.8	124.3	269.6	336.8	393.0	364.4	321.6	239.7	190.3	142.3	238.5
2005	117.9	100.8	120.3	192.4	261.1	333.6	388.3	387.7	320.0	280.3	195.8	137.9	246.4
2004	125.3	118.8	184.1	260.7	321.0	348.5	368.6	366.2	346.2	236.4	130.6	132.4	244.9
2003	119.7	121.0	156.8	175.6	266.2	353.5	424.7	394.1	364.0	311.0	160.4	133.3	248.3
2002	115.4	132.7	174.6	231.3	300.8	366.1	402.6	389.8	357.4	277.4	170.3	128.0	253.5
2001	125.8	108.7	151.2	192.5	309.0	356.2	365.9	377.8	311.3	284.2	155.4	118.0	238.0
2000	135.6	105.0	137.0	212.1	289.7	337.0	361.9	372.0	315.7	241.0	161.0	157.5	235.5
1999	139.1	114.1	141.6	168.6	303.2	348.5	389.5	375.6	314.6	287.1	183.9	161.8	244.0
1998													
1997													
1996													
1995													
1994													
1993													
1992													
1991													
1990													

Recycled water accounts for 0 % of 2008 deliveries, therefore select a a 10 year baseline period using the selection buttons below

Baseline Ending In...		Baseline 10-years	N/A	N/A	N/A	N/A	N/A
		◉	○	○	○	○	○
2010	○	241.4					
2009	○	240.8					
2008	◉	241.1					
2007	○	241.6					
2006	○	241.2					
2005	○	243.0					

	Ending in...	Baseline 5-years
○	2010	236.6
○	2009	236.5
◉	2008	238.2
○	2007	240.6

User selection buttons:

Base daily per capita water use (10-15yr baseline)	241.1
Base daily per capita water use (5yr baseline)	238.2

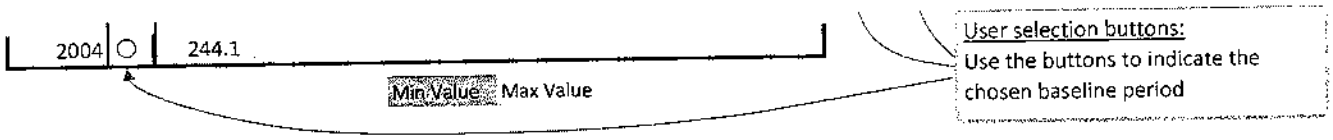
2004
244.1
Min Value
Max Value
User selection buttons:
Use the buttons to indicate the chosen baseline period

California Urban Water Conservation Council

CUWCC

This worksheet can be used as a calculator to generate an annual total for each year of input to the Main Data worksheet: (see here)

Annual Deductable Volume of Indirect Recycled Water Entering Distribution System

Data Entry in acre-feet unless otherwise noted

Input cells:
Calculated cells:

Surface Reservoir Augmentation	N/A	N/A	Volume Discharged from Reservoir for Distribution System Delivery	Recycled Water Blend %	Recycled Water Delivered to Treatment Plant	Use Default ☐ 3% Transmission / Treatment Loss %	Transmission / Treatment Losses	Volume entering Distribution System
(1)	(2)	(3)	(4)	(5)	(6)	(7)	(8)	(9)
Source 1			0.000		0.000	0%	0.000	0.000
Source 2								
Source 3								
Source 4								
Source 5								
						Subtotal Reservoir Augmentation (A):		0.000

Groundwater Recharge	5-Year Annual Average Recharge	Use Default ☐ 90% Recharge Recovery Factor	Recycled Water Pumped from Basin	Utility Pumping as % of Basin Total	Recycled Water Pumped by Utility	Use Default ☐ 3% Transmission / Treatment Loss %	Transmission / Treatment Losses	Volume entering Distribution System
(1)	(2)	(3)	(4)	(5)	(6)	(7)	(8)	(9)
Basin 1	0.000	0.000	0.000	0%	0.000	0%	0.000	0.000
Basin 2								
Basin 3								
Basin 4								
Basin 5								
						Subtotal Groundwater Recharge (B):		0.000
			Deductable Volume of Indirect Recycled Water Entering Distribution System (A+B):					0.000

Transfer this value back to the Main Data worksheet

California Urban Water Conservation Council

CUWCC

Population

Input cells:
Calculated cells:

Enter population data for the service area.

YEAR	POPULATION	
2010		
2009		
2008	29,813	
2007	29,618	
2006	29,027	
2005	28,000	
2004	27,200	
2003	26,856	
2002	25,800	
2001	25,200	
2000	24,450	
1999	22,500	
1998		
1997		
1996		
1995		
1994		
1993		
1992		
1991		
1990		

Please note:

The GPCD calculation is very sensitive to errors in population. Please review the guidance document ***Methodologies for Calculating Baseline and Compliance Urban Per Capita Water Use*** for additional information and direction in order to acquire the most accurate population estimates.

Population data are only required for years that contain water use data.

If you see "<--Enter Population" this indicates you have entered water use data for this timeframe but not population. Please add population data to enable a calculation of GPCD and associated targets.

26,846 Average population, for the baseline period selected, in the GPCD Matrix worksheet

California Urban Water Conservation Council

Main Data

Input cells:
Calculated cells:

Data Entry in acre-feet unless otherwise noted

* = Sum of Monthly data and Annual Total are not equal; monthly data will be used

Volume from Own Sources

Year	JAN	FEB	MAR	APR	MAY	JUN	JUL	AUG	SEP	OCT	NOV	DEC		ANNUAL TOTAL (INPUT)	METER ADJUST-MENT (%)	CALCULATED TOTAL
2010																0.000
2009																0.000
2008	336.119	313.568	485.519	624.775	813.161	914.115	982.531	984.668	865.433	744.272	472.821	353.941	*	7,890.922	0%	7,890.922
2007	393.652	309.443	483.682	666.731	860.633	938.758	1,034.197	975.759	844.358	681.296	538.145	399.759	*	8,126.413	0%	8,126.413
2006	309.276	350.859	316.396	336.801	730.582	912.702	1,064.878	987.364	871.301	649.561	515.557	385.527	*	7,430.805	0%	7,430.805
2005	308.233	263.581	314.426	502.770	682.533	872.040	1,014.982	1,013.310	836.324	732.728	511.878	360.300	*	7,413.103	0%	7,413.103
2004	318.195	301.604	467.493	661.898	814.977	884.901	935.784	929.802	879.083	600.219	331.639	336.218	*	7,461.812	0%	7,461.812
2003	300.159	303.360	393.131	440.180	667.228	886.157	1,064.622	987.945	912.543	779.537	402.024	334.094	*	7,470.979	0%	7,470.979
2002	277.971	319.533	420.392	557.150	724.472	881.673	969.508	938.773	860.691	668.128	410.123	308.205	*	7,336.617	0%	7,336.617
2001	295.807	255.789	355.564	452.919	726.863	837.858	860.801	888.759	732.286	668.628	365.646	277.636	*	6,718.555	0%	6,718.555
2000	309.574	239.735	312.787	484.178	661.253	769.214	826.009	848.934	720.618	549.981	367.502	359.542	*	6,449.329	0%	6,449.329
1999	292.189	239.680	297.498	354.150	636.825	732.022	817.981	788.950	660.670	603.006	386.220	339.757	*	6,148.945	0%	6,148.945
1998																0.000
1997																0.000
1996																0.000
1995																0.000
1994																0.000
1993																0.000
1992																0.000
1991																0.000
1990																0.000

Volume from Imported Sources

Year	JAN	FEB	MAR	APR	MAY	JUN	JUL	AUG	SEP	OCT	NOV	DEC	ANNUAL TOTAL (INPUT)	METER ADJUST-MENT (%)	CALCULATED TOTAL
2010	0.000	0.000	0.000	0.000	0.000	0.000	0.000	0.000	0.000	0.000	0.000	0.000	0.000		0.000
2009	0.000	0.000	0.000	0.000	0.000	0.000	0.000	0.000	0.000	0.000	0.000	0.000	0.000		0.000
2008	0.000	0.000	0.000	0.000	0.000	0.000	0.000	0.000	0.000	0.000	0.000	0.000	0.000		0.000
2007	0.000	0.000	0.000	0.000	0.000	0.000	0.000	0.000	0.000	0.000	0.000	0.000	0.000		0.000
2006	0.000	0.000	0.000	0.000	0.000	0.000	0.000	0.000	0.000	0.000	0.000	0.000	0.000		0.000
2005	0.000	0.000	0.000	0.000	0.000	0.000	0.000	0.000	0.000	0.000	0.000	0.000	0.000		0.000
2004	0.000	0.000	0.000	0.000	0.000	0.000	0.000	0.000	0.000	0.000	0.000	0.000	0.000		0.000
2003	0.000	0.000	0.000	0.000	0.000	0.000	0.000	0.000	0.000	0.000	0.000	0.000	0.000		0.000
2002	0.000	0.000	0.000	0.000	0.000	0.000	0.000	0.000	0.000	0.000	0.000	0.000	0.000		0.000
2001	0.000	0.000	0.000	0.000	0.000	0.000	0.000	0.000	0.000	0.000	0.000	0.000	0.000		0.000
2000	0.000	0.000	0.000	0.000	0.000	0.000	0.000	0.000	0.000	0.000	0.000	0.000	0.000		0.000
1999	0.000	0.000	0.000	0.000	0.000	0.000	0.000	0.000	0.000	0.000	0.000	0.000	0.000		0.000
1998	0.000	0.000	0.000	0.000	0.000	0.000	0.000	0.000	0.000	0.000	0.000	0.000	0.000		0.000

1997	0.000	0.000	0.000	0.000	0.000	0.000	0.000	0.000	0.000	0.000	0.000	0.000	0.000		0.000
1996	0.000	0.000	0.000	0.000	0.000	0.000	0.000	0.000	0.000	0.000	0.000	0.000	0.000		0.000
1995	0.000	0.000	0.000	0.000	0.000	0.000	0.000	0.000	0.000	0.000	0.000	0.000	0.000		0.000
1994	0.000	0.000	0.000	0.000	0.000	0.000	0.000	0.000	0.000	0.000	0.000	0.000	0.000		0.000
1993	0.000	0.000	0.000	0.000	0.000	0.000	0.000	0.000	0.000	0.000	0.000	0.000	0.000		0.000
1992	0.000	0.000	0.000	0.000	0.000	0.000	0.000	0.000	0.000	0.000	0.000	0.000	0.000		0.000
1991	0.000	0.000	0.000	0.000	0.000	0.000	0.000	0.000	0.000	0.000	0.000	0.000	0.000		0.000
1990	0.000	0.000	0.000	0.000	0.000	0.000	0.000	0.000	0.000	0.000	0.000	0.000	0.000		0.000

Volume of Water Exported to Another Water Utility or Jurisdiction

Year	JAN	FEB	MAR	APR	MAY	JUN	JUL	AUG	SEP	OCT	NOV	DEC	ANNUAL TOTAL (INPUT)	METER ADJUST-MENT (%)	CALCULATED TOTAL
2010	0.000	0.000	0.000	0.000	0.000	0.000	0.000	0.000	0.000	0.000	0.000	0.000	0.000		0.000
2009	0.000	0.000	0.000	0.000	0.000	0.000	0.000	0.000	0.000	0.000	0.000	0.000	0.000		0.000
2008	0.000	0.000	0.000	0.000	0.000	0.000	0.000	0.000	0.000	0.000	0.000	0.000	0.000		0.000
2007	0.000	0.000	0.000	0.000	0.000	0.000	0.000	0.000	0.000	0.000	0.000	0.000	0.000		0.000
2006	0.000	0.000	0.000	0.000	0.000	0.000	0.000	0.000	0.000	0.000	0.000	0.000	0.000		0.000
2005	0.000	0.000	0.000	0.000	0.000	0.000	0.000	0.000	0.000	0.000	0.000	0.000	0.000		0.000
2004	0.000	0.000	0.000	0.000	0.000	0.000	0.000	0.000	0.000	0.000	0.000	0.000	0.000		0.000
2003	0.000	0.000	0.000	0.000	0.000	0.000	0.000	0.000	0.000	0.000	0.000	0.000	0.000		0.000
2002	0.000	0.000	0.000	0.000	0.000	0.000	0.000	0.000	0.000	0.000	0.000	0.000	0.000		0.000
2001	0.000	0.000	0.000	0.000	0.000	0.000	0.000	0.000	0.000	0.000	0.000	0.000	0.000		0.000
2000	0.000	0.000	0.000	0.000	0.000	0.000	0.000	0.000	0.000	0.000	0.000	0.000	0.000		0.000
1999	0.000	0.000	0.000	0.000	0.000	0.000	0.000	0.000	0.000	0.000	0.000	0.000	0.000		0.000
1998	0.000	0.000	0.000	0.000	0.000	0.000	0.000	0.000	0.000	0.000	0.000	0.000	0.000		0.000
1997	0.000	0.000	0.000	0.000	0.000	0.000	0.000	0.000	0.000	0.000	0.000	0.000	0.000		0.000
1996	0.000	0.000	0.000	0.000	0.000	0.000	0.000	0.000	0.000	0.000	0.000	0.000	0.000		0.000
1995	0.000	0.000	0.000	0.000	0.000	0.000	0.000	0.000	0.000	0.000	0.000	0.000	0.000		0.000
1994	0.000	0.000	0.000	0.000	0.000	0.000	0.000	0.000	0.000	0.000	0.000	0.000	0.000		0.000
1993	0.000	0.000	0.000	0.000	0.000	0.000	0.000	0.000	0.000	0.000	0.000	0.000	0.000		0.000
1992	0.000	0.000	0.000	0.000	0.000	0.000	0.000	0.000	0.000	0.000	0.000	0.000	0.000		0.000
1991	0.000	0.000	0.000	0.000	0.000	0.000	0.000	0.000	0.000	0.000	0.000	0.000	0.000		0.000
1990	0.000	0.000	0.000	0.000	0.000	0.000	0.000	0.000	0.000	0.000	0.000	0.000	0.000		0.000

Recycled Water Delivered

NOTE: Only 2008 recycled water delivered is required; other years are optional

Year	JAN	FEB	MAR	APR	MAY	JUN	JUL	AUG	SEP	OCT	NOV	DEC	ANNUAL TOTAL (INPUT)	METER ADJUST-MENT (%)	CALCULATED TOTAL
2010	0.000	0.000	0.000	0.000	0.000	0.000	0.000	0.000	0.000	0.000	0.000	0.000	0.000		0.000
2009	0.000	0.000	0.000	0.000	0.000	0.000	0.000	0.000	0.000	0.000	0.000	0.000	0.000		0.000
2008	0.000	0.000	0.000	0.000	0.000	0.000	0.000	0.000	0.000	0.000	0.000	0.000	0.000		0.000
2007	0.000	0.000	0.000	0.000	0.000	0.000	0.000	0.000	0.000	0.000	0.000	0.000	0.000		0.000
2006	0.000	0.000	0.000	0.000	0.000	0.000	0.000	0.000	0.000	0.000	0.000	0.000	0.000		0.000
2005	0.000	0.000	0.000	0.000	0.000	0.000	0.000	0.000	0.000	0.000	0.000	0.000	0.000		0.000
2004	0.000	0.000	0.000	0.000	0.000	0.000	0.000	0.000	0.000	0.000	0.000	0.000	0.000		0.000
2003	0.000	0.000	0.000	0.000	0.000	0.000	0.000	0.000	0.000	0.000	0.000	0.000	0.000		0.000
2002	0.000	0.000	0.000	0.000	0.000	0.000	0.000	0.000	0.000	0.000	0.000	0.000	0.000		0.000
2001	0.000	0.000	0.000	0.000	0.000	0.000	0.000	0.000	0.000	0.000	0.000	0.000	0.000		0.000

2000	0.000	0.000	0.000	0.000	0.000	0.000	0.000	0.000	0.000	0.000	0.000	0.000
1999	0.000	0.000	0.000	0.000	0.000	0.000	0.000	0.000	0.000	0.000	0.000	0.000
1998	0.000	0.000	0.000	0.000	0.000	0.000	0.000	0.000	0.000	0.000	0.000	0.000
1997	0.000	0.000	0.000	0.000	0.000	0.000	0.000	0.000	0.000	0.000	0.000	0.000
1996	0.000	0.000	0.000	0.000	0.000	0.000	0.000	0.000	0.000	0.000	0.000	0.000
1995	0.000	0.000	0.000	0.000	0.000	0.000	0.000	0.000	0.000	0.000	0.000	0.000
1994	0.000	0.000	0.000	0.000	0.000	0.000	0.000	0.000	0.000	0.000	0.000	0.000
1993	0.000	0.000	0.000	0.000	0.000	0.000	0.000	0.000	0.000	0.000	0.000	0.000
1992	0.000	0.000	0.000	0.000	0.000	0.000	0.000	0.000	0.000	0.000	0.000	0.000
1991	0.000	0.000	0.000	0.000	0.000	0.000	0.000	0.000	0.000	0.000	0.000	0.000
1990	0.000	0.000	0.000	0.000	0.000	0.000	0.000	0.000	0.000	0.000	0.000	0.000

0.000		0.000
0.000		0.000
0.000		0.000
0.000		0.000
0.000		0.000
0.000		0.000
0.000		0.000
0.000		0.000
0.000		0.000
0.000		0.000
0.000		0.000
0.000		0.000

Change in Distribution System Storage

Year	JAN	FEB	MAR	APR	MAY	JUN	JUL	AUG	SEP	OCT	NOV	DEC
2010	0.000	0.000	0.000	0.000	0.000	0.000	0.000	0.000	0.000	0.000	0.000	0.000
2009	0.000	0.000	0.000	0.000	0.000	0.000	0.000	0.000	0.000	0.000	0.000	0.000
2008	0.000	0.000	0.000	0.000	0.000	0.000	0.000	0.000	0.000	0.000	0.000	0.000
2007	0.000	0.000	0.000	0.000	0.000	0.000	0.000	0.000	0.000	0.000	0.000	0.000
2006	0.000	0.000	0.000	0.000	0.000	0.000	0.000	0.000	0.000	0.000	0.000	0.000
2005	0.000	0.000	0.000	0.000	0.000	0.000	0.000	0.000	0.000	0.000	0.000	0.000
2004	0.000	0.000	0.000	0.000	0.000	0.000	0.000	0.000	0.000	0.000	0.000	0.000
2003	0.000	0.000	0.000	0.000	0.000	0.000	0.000	0.000	0.000	0.000	0.000	0.000
2002	0.000	0.000	0.000	0.000	0.000	0.000	0.000	0.000	0.000	0.000	0.000	0.000
2001	0.000	0.000	0.000	0.000	0.000	0.000	0.000	0.000	0.000	0.000	0.000	0.000
2000	0.000	0.000	0.000	0.000	0.000	0.000	0.000	0.000	0.000	0.000	0.000	0.000
1999	0.000	0.000	0.000	0.000	0.000	0.000	0.000	0.000	0.000	0.000	0.000	0.000
1998	0.000	0.000	0.000	0.000	0.000	0.000	0.000	0.000	0.000	0.000	0.000	0.000
1997	0.000	0.000	0.000	0.000	0.000	0.000	0.000	0.000	0.000	0.000	0.000	0.000
1996	0.000	0.000	0.000	0.000	0.000	0.000	0.000	0.000	0.000	0.000	0.000	0.000
1995	0.000	0.000	0.000	0.000	0.000	0.000	0.000	0.000	0.000	0.000	0.000	0.000
1994	0.000	0.000	0.000	0.000	0.000	0.000	0.000	0.000	0.000	0.000	0.000	0.000
1993	0.000	0.000	0.000	0.000	0.000	0.000	0.000	0.000	0.000	0.000	0.000	0.000
1992	0.000	0.000	0.000	0.000	0.000	0.000	0.000	0.000	0.000	0.000	0.000	0.000
1991	0.000	0.000	0.000	0.000	0.000	0.000	0.000	0.000	0.000	0.000	0.000	0.000
1990	0.000	0.000	0.000	0.000	0.000	0.000	0.000	0.000	0.000	0.000	0.000	0.000

Year	ANNUAL CHANGE IN STORAGE	CALCULATED Net Change in Storage
2010	0.000	0.000
2009	0.000	0.000
2008	0.000	0.000
2007	0.000	0.000
2006	0.000	0.000
2005	0.000	0.000
2004	0.000	0.000
2003	0.000	0.000
2002	0.000	0.000
2001	0.000	0.000
2000	0.000	0.000
1999	0.000	0.000
1998	0.000	0.000
1997	0.000	0.000
1996	0.000	0.000
1995	0.000	0.000
1994	0.000	0.000
1993	0.000	0.000
1992	0.000	0.000
1991	0.000	0.000
1990	0.000	0.000

Indirect Recycled Water Use

(use this calculator to help generate values)

Year	JAN	FEB	MAR	APR	MAY	JUN	JUL	AUG	SEP	OCT	NOV	DEC
2010	0.000	0.000	0.000	0.000	0.000	0.000	0.000	0.000	0.000	0.000	0.000	0.000
2009	0.000	0.000	0.000	0.000	0.000	0.000	0.000	0.000	0.000	0.000	0.000	0.000
2008	0.000	0.000	0.000	0.000	0.000	0.000	0.000	0.000	0.000	0.000	0.000	0.000
2007	0.000	0.000	0.000	0.000	0.000	0.000	0.000	0.000	0.000	0.000	0.000	0.000
2006	0.000	0.000	0.000	0.000	0.000	0.000	0.000	0.000	0.000	0.000	0.000	0.000
2005	0.000	0.000	0.000	0.000	0.000	0.000	0.000	0.000	0.000	0.000	0.000	0.000
2004	0.000	0.000	0.000	0.000	0.000	0.000	0.000	0.000	0.000	0.000	0.000	0.000

Year	ANNUAL TOTAL (INPUT)	CALCULATED TOTAL
2010	0.000	0.000
2009	0.000	0.000
2008	0.000	0.000
2007	0.000	0.000
2006	0.000	0.000
2005	0.000	0.000
2004	0.000	0.000

2003	0.000	0.000	0.000	0.000	0.000	0.000	0.000	0.000	0.000	0.000	0.000	0.000
2002	0.000	0.000	0.000	0.000	0.000	0.000	0.000	0.000	0.000	0.000	0.000	0.000
2001	0.000	0.000	0.000	0.000	0.000	0.000	0.000	0.000	0.000	0.000	0.000	0.000
2000	0.000	0.000	0.000	0.000	0.000	0.000	0.000	0.000	0.000	0.000	0.000	0.000
1999	0.000	0.000	0.000	0.000	0.000	0.000	0.000	0.000	0.000	0.000	0.000	0.000
1998	0.000	0.000	0.000	0.000	0.000	0.000	0.000	0.000	0.000	0.000	0.000	0.000
1997	0.000	0.000	0.000	0.000	0.000	0.000	0.000	0.000	0.000	0.000	0.000	0.000
1996	0.000	0.000	0.000	0.000	0.000	0.000	0.000	0.000	0.000	0.000	0.000	0.000
1995	0.000	0.000	0.000	0.000	0.000	0.000	0.000	0.000	0.000	0.000	0.000	0.000
1994	0.000	0.000	0.000	0.000	0.000	0.000	0.000	0.000	0.000	0.000	0.000	0.000
1993	0.000	0.000	0.000	0.000	0.000	0.000	0.000	0.000	0.000	0.000	0.000	0.000
1992	0.000	0.000	0.000	0.000	0.000	0.000	0.000	0.000	0.000	0.000	0.000	0.000
1991	0.000	0.000	0.000	0.000	0.000	0.000	0.000	0.000	0.000	0.000	0.000	0.000
1990	0.000	0.000	0.000	0.000	0.000	0.000	0.000	0.000	0.000	0.000	0.000	0.000

2003	0.000	0.000
2002	0.000	0.000
2001	0.000	0.000
2000	0.000	0.000
1999	0.000	0.000
1998	0.000	0.000
1997	0.000	0.000
1996	0.000	0.000
1995	0.000	0.000
1994	0.000	0.000
1993	0.000	0.000
1992	0.000	0.000
1991	0.000	0.000
1990	0.000	0.000

Water Delivered for Agricultural Use (values entered will be subtracted from base daily GPCD water use)

Year	JAN	FEB	MAR	APR	MAY	JUN	JUL	AUG	SEP	OCT	NOV	DEC
2010	0.000	0.000	0.000	0.000	0.000	0.000	0.000	0.000	0.000	0.000	0.000	0.000
2009	0.000	0.000	0.000	0.000	0.000	0.000	0.000	0.000	0.000	0.000	0.000	0.000
2008	0.000	0.000	0.000	0.000	0.000	0.000	0.000	0.000	0.000	0.000	0.000	0.000
2007	0.000	0.000	0.000	0.000	0.000	0.000	0.000	0.000	0.000	0.000	0.000	0.000
2006	0.000	0.000	0.000	0.000	0.000	0.000	0.000	0.000	0.000	0.000	0.000	0.000
2005	0.000	0.000	0.000	0.000	0.000	0.000	0.000	0.000	0.000	0.000	0.000	0.000
2004	0.000	0.000	0.000	0.000	0.000	0.000	0.000	0.000	0.000	0.000	0.000	0.000
2003	0.000	0.000	0.000	0.000	0.000	0.000	0.000	0.000	0.000	0.000	0.000	0.000
2002	0.000	0.000	0.000	0.000	0.000	0.000	0.000	0.000	0.000	0.000	0.000	0.000
2001	0.000	0.000	0.000	0.000	0.000	0.000	0.000	0.000	0.000	0.000	0.000	0.000
2000	0.000	0.000	0.000	0.000	0.000	0.000	0.000	0.000	0.000	0.000	0.000	0.000
1999	0.000	0.000	0.000	0.000	0.000	0.000	0.000	0.000	0.000	0.000	0.000	0.000
1998	0.000	0.000	0.000	0.000	0.000	0.000	0.000	0.000	0.000	0.000	0.000	0.000
1997	0.000	0.000	0.000	0.000	0.000	0.000	0.000	0.000	0.000	0.000	0.000	0.000
1996	0.000	0.000	0.000	0.000	0.000	0.000	0.000	0.000	0.000	0.000	0.000	0.000
1995	0.000	0.000	0.000	0.000	0.000	0.000	0.000	0.000	0.000	0.000	0.000	0.000
1994	0.000	0.000	0.000	0.000	0.000	0.000	0.000	0.000	0.000	0.000	0.000	0.000
1993	0.000	0.000	0.000	0.000	0.000	0.000	0.000	0.000	0.000	0.000	0.000	0.000
1992	0.000	0.000	0.000	0.000	0.000	0.000	0.000	0.000	0.000	0.000	0.000	0.000
1991	0.000	0.000	0.000	0.000	0.000	0.000	0.000	0.000	0.000	0.000	0.000	0.000
1990	0.000	0.000	0.000	0.000	0.000	0.000	0.000	0.000	0.000	0.000	0.000	0.000

ANNUAL TOTAL (INPUT)	METER ADJUST-MENT (%)	CALCULATED TOTAL
0.000		0.000
0.000		0.000
0.000		0.000
0.000		0.000
0.000		0.000
0.000		0.000
0.000		0.000
0.000		0.000
0.000		0.000
0.000		0.000
0.000		0.000
0.000		0.000
0.000		0.000
0.000		0.000
0.000		0.000
0.000		0.000
0.000		0.000
0.000		0.000
0.000		0.000
0.000		0.000
0.000		0.000
0.000		0.000
0.000		0.000
0.000		0.000
0.000		0.000
0.000		0.000

Industrial Process Water Delivered (values entered will be subtracted from base daily GPCD water use and baseline CII GPCD)

Year	JAN	FEB	MAR	APR	MAY	JUN	JUL	AUG	SEP	OCT	NOV	DEC
2010	0.000	0.000	0.000	0.000	0.000	0.000	0.000	0.000	0.000	0.000	0.000	0.000
2009	0.000	0.000	0.000	0.000	0.000	0.000	0.000	0.000	0.000	0.000	0.000	0.000
2008	0.000	0.000	0.000	0.000	0.000	0.000	0.000	0.000	0.000	0.000	0.000	0.000
2007	0.000	0.000	0.000	0.000	0.000	0.000	0.000	0.000	0.000	0.000	0.000	0.000

ANNUAL TOTAL (INPUT)	METER ADJUST-MENT (%)	CALCULATED TOTAL
0.000		0.000
0.000		0.000
0.000		0.000
0.000		0.000

2006	0.000	0.000	0.000	0.000	0.000	0.000	0.000	0.000	0.000	0.000	0.000	0.000	0.000	0.000
2005	0.000	0.000	0.000	0.000	0.000	0.000	0.000	0.000	0.000	0.000	0.000	0.000	0.000	0.000
2004	0.000	0.000	0.000	0.000	0.000	0.000	0.000	0.000	0.000	0.000	0.000	0.000	0.000	0.000
2003	0.000	0.000	0.000	0.000	0.000	0.000	0.000	0.000	0.000	0.000	0.000	0.000	0.000	0.000
2002	0.000	0.000	0.000	0.000	0.000	0.000	0.000	0.000	0.000	0.000	0.000	0.000	0.000	0.000
2001	0.000	0.000	0.000	0.000	0.000	0.000	0.000	0.000	0.000	0.000	0.000	0.000	0.000	0.000
2000	0.000	0.000	0.000	0.000	0.000	0.000	0.000	0.000	0.000	0.000	0.000	0.000	0.000	0.000
1999	0.000	0.000	0.000	0.000	0.000	0.000	0.000	0.000	0.000	0.000	0.000	0.000	0.000	0.000
1998	0.000	0.000	0.000	0.000	0.000	0.000	0.000	0.000	0.000	0.000	0.000	0.000	0.000	0.000
1997	0.000	0.000	0.000	0.000	0.000	0.000	0.000	0.000	0.000	0.000	0.000	0.000	0.000	0.000
1996	0.000	0.000	0.000	0.000	0.000	0.000	0.000	0.000	0.000	0.000	0.000	0.000	0.000	0.000
1995	0.000	0.000	0.000	0.000	0.000	0.000	0.000	0.000	0.000	0.000	0.000	0.000	0.000	0.000
1994	0.000	0.000	0.000	0.000	0.000	0.000	0.000	0.000	0.000	0.000	0.000	0.000	0.000	0.000
1993	0.000	0.000	0.000	0.000	0.000	0.000	0.000	0.000	0.000	0.000	0.000	0.000	0.000	0.000
1992	0.000	0.000	0.000	0.000	0.000	0.000	0.000	0.000	0.000	0.000	0.000	0.000	0.000	0.000
1991	0.000	0.000	0.000	0.000	0.000	0.000	0.000	0.000	0.000	0.000	0.000	0.000	0.000	0.000
1990	0.000	0.000	0.000	0.000	0.000	0.000	0.000	0.000	0.000	0.000	0.000	0.000	0.000	0.000

Gross Water Use

Year	JAN	FEB	MAR	APR	MAY	JUN	JUL	AUG	SEP	OCT	NOV	DEC	ANNUAL TOTAL USAGE
2010	0.000	0.000	0.000	0.000	0.000	0.000	0.000	0.000	0.000	0.000	0.000	0.000	0.000
2009	0.000	0.000	0.000	0.000	0.000	0.000	0.000	0.000	0.000	0.000	0.000	0.000	0.000
2008	338,819	311,563	445,519	624,775	818,161	904,815	961,531	984,668	885,413	744,242	472,871	354,947	7,892,932
2007	393,652	309,441	483,882	666,751	860,813	908,798	1,034,197	972,739	844,338	681,296	538,145	391,764	8,121,813
2006	389,276	350,859	516,306	595,901	790,583	912,302	1,064,678	967,364	871,401	643,561	515,557	385,517	7,993,815
2005	303,233	260,581	304,428	502,270	685,193	872,840	1,014,982	1,009,310	835,324	732,758	511,878	390,300	7,413,106
2004	318,186	301,604	467,493	661,870	818,872	884,001	925,764	929,803	879,083	600,214	391,630	316,218	7,461,612
2003	300,153	303,360	393,131	490,180	567,728	880,157	1,056,621	967,945	912,543	790,537	402,024	334,294	7,470,890
2002	293,931	310,533	420,392	557,150	724,472	834,673	972,508	938,173	860,581	664,128	410,133	308,705	7,[illegible]
2001	285,807	224,780	335,564	451,092	728,863	897,858	860,601	865,759	792,786	668,628	365,685	297,630	5,718,556
2000	305,574	239,715	312,707	454,178	681,753	762,114	876,009	848,934	710,618	588,981	367,903	351,542	6,442,328
1999	294,155	230,370	297,498	394,120	626,025	731,322	817,981	784,950	660,670	601,006	386,223	339,757	6,148,948
1998	0.000	0.000	0.000	0.000	0.000	0.000	0.000	0.000	0.000	0.000	0.000	0.000	0.000
1997	0.000	0.000	0.000	0.000	0.000	0.000	0.000	0.000	0.000	0.000	0.000	0.000	0.000
1996	0.000	0.000	0.000	0.000	0.000	0.000	0.000	0.000	0.000	0.000	0.000	0.000	0.000
1995	0.000	0.000	0.000	0.000	0.000	0.000	0.000	0.000	0.000	0.000	0.000	0.000	0.000
1994	0.000	0.000	0.000	0.000	0.000	0.000	0.000	0.000	0.000	0.000	0.000	0.000	0.000
1993	0.000	0.000	0.000	0.000	0.000	0.000	0.000	0.000	0.000	0.000	0.000	0.000	0.000
1992	0.000	0.000	0.000	0.000	0.000	0.000	0.000	0.000	0.000	0.000	0.000	0.000	0.000
1991	0.000	0.000	0.000	0.000	0.000	0.000	0.000	0.000	0.000	0.000	0.000	0.000	0.000
1990	0.000	0.000	0.000	0.000	0.000	0.000	0.000	0.000	0.000	0.000	0.000	0.000	0.000

Sustainable Solutions for a Thirsty Planet®

Seawater Desalination Costs

White Paper

September 2011; Revised January 2012

The WateReuse Desalination Committee's White Papers are living documents. The intent of the Committee is to enhance the content of the papers periodically as new and pertinent information on the topics becomes available. Members of the desalination stakeholder community are encouraged to submit their constructive comments to white-papers@watereuse.org and share their experience and/or case studies for consideration for inclusion in the next issuance of the white papers.

WATEREUSE ASSOCIATION
DESALINATION COMMITTEE

Seawater Desalination Costs

White Paper

I Introduction

One of the most sensitive and critical aspects of any water project is cost. For membrane desalination, decreasing costs and producing superior water quality are among a number of significant reasons why this technology continues to be the water treatment technology of choice in the United States and around the world. This white paper serves to: provide an overview of cost drivers and components of the desalination process; present costs associated with desalination compared to other water supply alternatives; discuss challenges and perceptions; and highlight recent advances in desalination technology that affect the total delivered cost of water.

Although membrane desalination was first commercialized in the United States in the late 1960's, reverse osmosis membrane technology was not widely implemented until the 1980's, largely due to the relatively high costs compared to other potable water treatment alternatives. Why have these costs decreased or appeared more reasonable and competitive over time? Although there are a number of reasons, the reduction in costs are primarily related to improvements in manufacturing methods, the changing facets of the regulatory environment in the United States, the increased market demand and competition for membranes, and the gradual depletion of more conventional groundwater sources.

Since the early 1990's, one example of the successful implementation of reverse osmosis desalination technology is its designation as a "best available technology" (BAT) by the United States Environmental Protection Agency (US EPA) for removal (and/or reduction) of numerous inorganic contaminants (e.g., antimony, arsenic, barium, fluoride, nitrate, nitrite, boron, selenium, radionuclides), endocrine disrupting compounds (e.g., synthetic and natural hormones), and several pharmaceutical compounds.

Together with a reduction in the membrane technology costs beginning in the 1980's, BAT designation became one other (albeit significant) technical component to consider in the process of developing and potentially implementing a desalination facility. Other decision factors are rooted in both technical and non-technical components of water supply projects such as timing, available space, and other specific locally-driven concerns. However, the determination of meaningful costs associated with membrane (including seawater membrane) desalination has proven a bit more elusive when applied without consideration of site specific issues or how the costs compare with other viable, reliable, and long-term water supply alternatives in the same locale.

For many years, planners have used tools generally available in the marketplace to determine relative costs for desalination. Most costing models for desalination plants have been developed by agencies such as the US EPA and the US Department of the Interior. Engineering consultants have contributed select project cost experience gained from their clients or from trade journals and publications; and although this information can be very helpful, the data can at times be either too generalized or too project site-specific to be particularly helpful to project planners for specific guidance or to those interested in gauging costs compared to their particular project or environment.

A consolidated list of representative examples includes:

1. In 1979, the US EPA published *Estimating Water Treatment Costs.* This document is still used by some industry professionals as a reference guide to compute cost estimates for pretreatment, post-treatment, and conventional treatment technologies.
2. Previous to the US EPA document, the Department of the Interior developed in 1967 and 1969 the *Guideline for Uniform Presentation of Desalting Costs Estimates* (Research and Development Progress Report No. 264), which is sometimes still referenced yet, by today's standards, appears quite dated.
3. In 1999, the Department of the Interior's Bureau of Reclamation developed the *Water Treatment Evaluation Routine* program and manual (based on the US EPA *Estimating Water Treatment Costs).*
4. In 2003 and updated in 2008, a Water Treatment Cost Estimation Program was jointly developed by I. Moch & Associates and the Bureau of Reclamation (WT Cost II©)[1] to estimate costs and is partially based on updated cost curves generated by the US EPA (*Estimating Water* Treatment *Costs*, EPA-600/2-79-162a, EPA-600/2-79-162b, EPA-600/2-79-162c, August 1979) and is an upgraded version of the WaTER (Water Treatment Estimation Routine) excel spreadsheet developed by the Bureau of Reclamation in 1999.
5. In 2009, Global Water Intelligence[2] developed a desalination cost estimation program available on their website for reference by professionals interested in capital, operations and maintenance costs associated with desalination plants.

The water treatment industry continues to work towards standardization; however, there is no single resource or programming tool to capture all of the particular nuances materially affecting Seawater Reverse Osmosis (SWRO) facility costs.

Some of the above referenced models look at the cost of the technology in a "stand-alone" fashion, while others consider the impacts associated with other ancillary factors which can be site-specific. Costing sources are one tool in the planner/designer's toolbox, and a typical planning approach could incorporate use of computer programs, established cost curves, other bid costs for comparison, and similar applications

1 Moch, I., Querns, W, M., and Steward, D.; WT Cost II, Desalination and Water Purification Research and Development Program Report No. 130, February 2008.
2 GWI/DesalData Cost Estimator: www.desaldata.com.

for comparison purposes. Therefore, it is important to gain a comprehensive understanding of the costs associated with desalination when utilizing these models or developing the costs for desalination projects. Additionally, common sense is necessary when using these tools insofar as a particular project may have some unique components that cannot be modeled in a computer program alone. In any given situation, water industry planners, managers, and engineers can best serve the needs of the water stakeholder community through an awareness of the design and expected operating conditions of the proposed water treatment plant, as well as the validity and accuracy of the costing sources.

II Cost Trends

The unit costs for desalination processes have fallen considerably over the last three decades[3]. Figure 1 further exemplifies the downward trend[4].

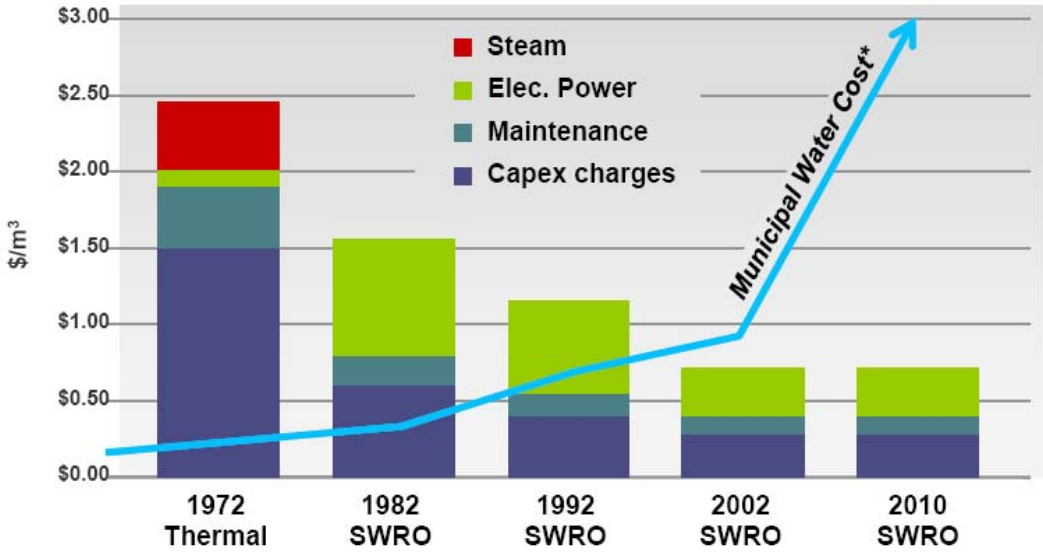

Figure 1
SWRO Cost Trend[5]
** Water costs for San Diego, Monterey, Perth, Sydney, and Barcelona*

As shown in Figure 2, there is also an economy of scale cost-benefit associated with increasing plant capacity to effectively lessen membrane desalination plant unit construction costs.

3 Zhou, Y., and R. S. J. Tol (2005), Evaluating the Costs of Desalination and Water Transport, *Water Resources Res.*, 41, W03003, doi:10.1029/2004WR003749.
4 Tom Willardson, CFO: Energy Recovery Incorporated reference presentation material, February 24, 2011.
5 Ibid.

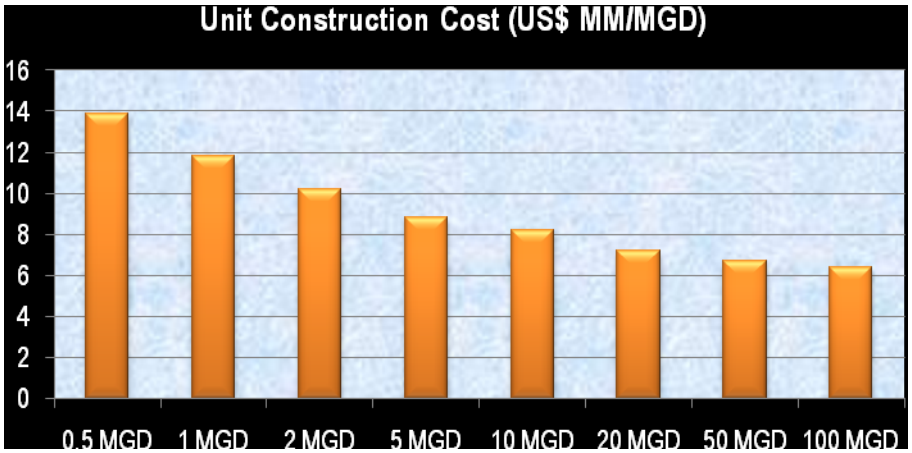

Figure 2
Unit Construction Cost vs. Capacity[6]

The historic downward trend of the cost of desalination is generally associated with technology improvements such as improved SWRO membrane performance and significant advances in the ability to recover more energy from the desalination process. However, considering other unassociated factors, Figure 3 shows that the costs have remained flat in recent years (even in consideration of increased production capacities) and, in a few cases, trended upwards. Identification of the various key project components that make up costs, as described in Section III, explains this trend and the drivers behind facility costs and the cost to supply water to end-users.

6 Wilf, M., Awerbuch, L., Bartels, C., Mickley, M., Pearce, G., Voutchkov, N., 2007. *The Guidebook to Membrane Desalination Technology: Reverse Osmosis, Nanofiltration and Hybrid Systems Process Design, Applications and Economics*. Balaban Publishers, Rehovot, Israel.

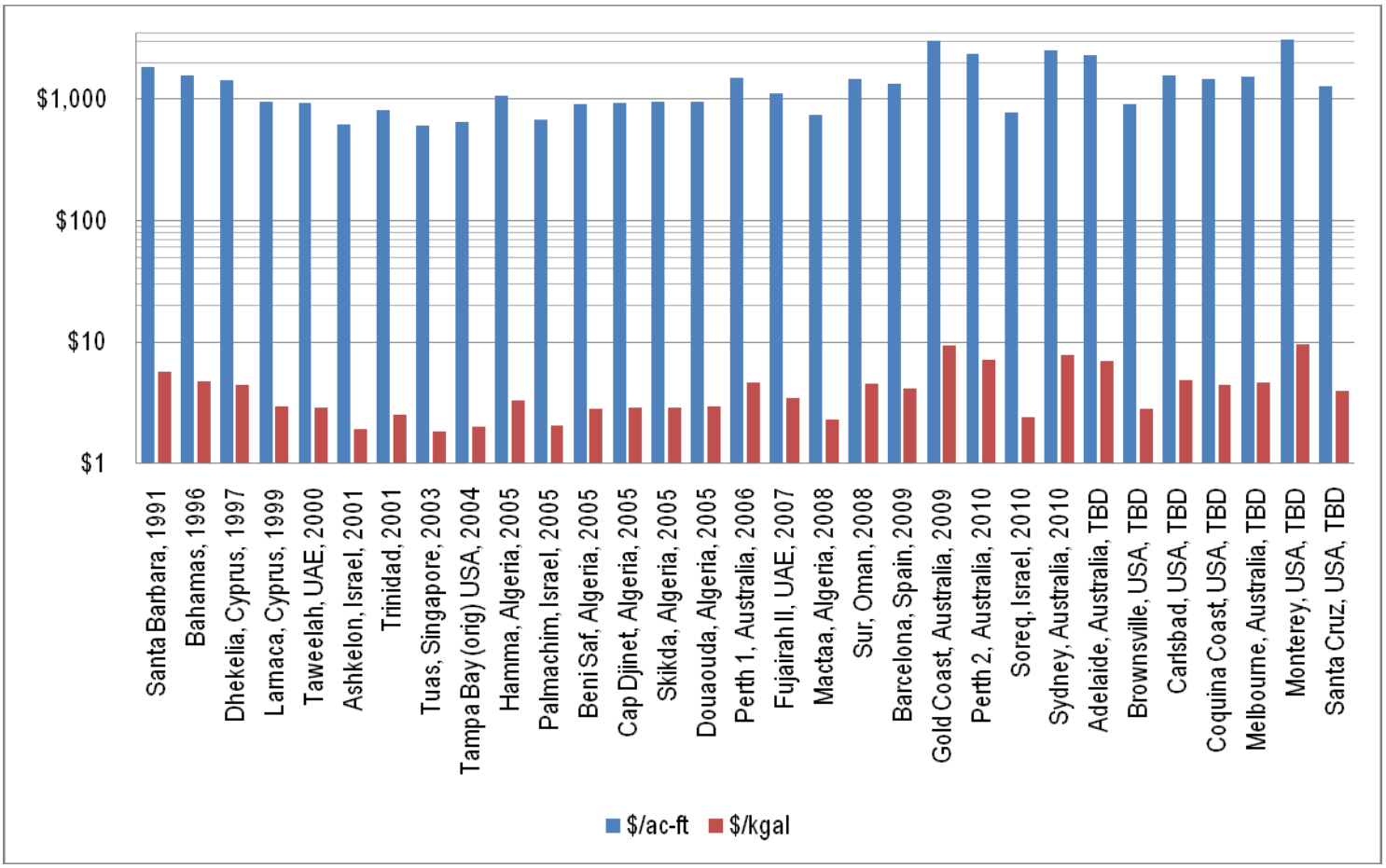

Figure 3
SWRO Cost Trends, Annualized[7]

III Project Capital Cost Drivers

What drives the overall cost of a desalination facility? The individual, categorical factors causing and contributing to the overall cost of a project are largely the same regardless of the project. However, the magnitude of these factors can vary significantly amongst differing projects and, therefore, result in cost differences. Figure 4 shows the cost categories associated with a SWRO desalination project.

7 Courtesy of Water Desalination Report; Presented at the Texas Innovative Water Workshop, San Antonio, Texas, October 11, 2010.

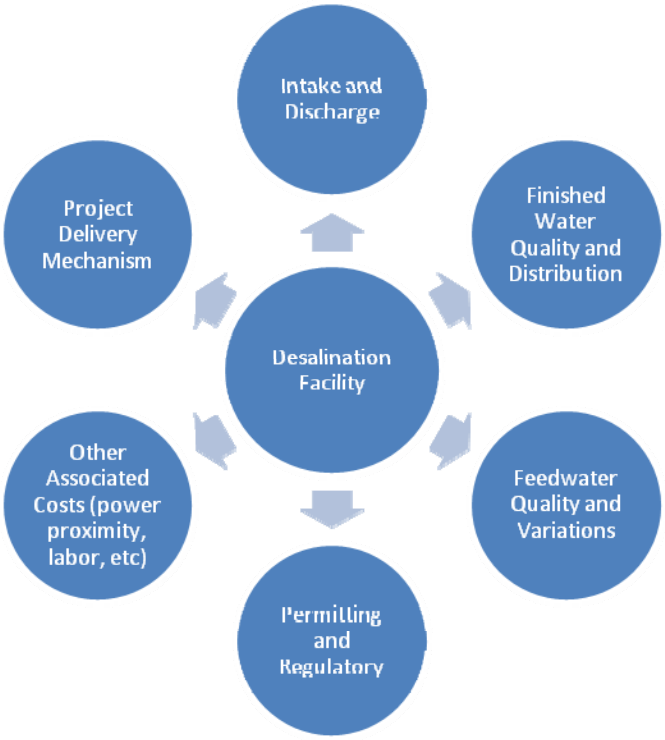

Figure 4
Cost Categories Contributing to SWRO Projects[8]

The level of accuracy desired with cost estimates is dependent on the end purpose of using the estimate and the degree of effort invested. The AACE categorizes the level of effort in five estimate classes[9].

Using an AAC-defined assumption that the conceptual screening process has been completed (Class 5; -20% to -50% low to +30% to +100 high), the potential impact that each cost category in Figure 4 should be assessed in order to gain a reasonable understanding of the associated, overall capital and operating costs.

A. <u>Selection of Intake and Concentrate Discharge</u>

Feed water intake configuration directly affects capital and operational costs of the treatment process. For example, open intake costs will represent approximately US$ 0.5 – 1.5MM per MGD and up to US$ 3.0MM per MGD for complex tunnel and offshore intake systems. Without consideration for the cost of land associated with each option, beach well intakes are usually less costly on an equipment basis. However, once land acquisition and easements are factored into the process, this intake type is typically 40 to 50% more costly than an open intake of similar capacity. Horizontal and slant wells are comparable to open intake (yet more costly than co-located open intakes using existing infrastructure), and infiltration galleries typically cost more than open intakes. Of all the intake options, only open intakes have the longest-running

8 Dietrich Consulting Group, LLC.
9 AACE International Recommended Practice No. 18R-97. Cost estimate classification system-as applied in engineering, procurement, and construction for the process industries.

installation history and reliability necessary to support the full-scale development of a large desalination facility at a new site. As a result, there is a significant depth of understanding related to the costs associated with constructing open intakes as well as the associated discharge pipeline.

The intake and feed water source selection cost impact is demonstrated in Figure 3. In Australia, for example, costs for newly constructed intake/outfall structures can approach a third of the total project cost (based on distance to the facility and related infrastructure costs) and are much more expensive than the proposed 50 MGD Carlsbad, California seawater desalination project, largely due to this project's access to the adjacent power plant intake and discharge infrastructure. Alternatively, for the proposed 50 – 150 MGD Camp Pendleton project, which is currently in the development phase with the San Diego County Water Authority (SDCWA), cost estimates approach US$ 1.3B to US$ 1.9B (2009 constant dollars) for Phase 1 that incorporates dedicated intake and outfall structures approximately 2-miles offshore, and 13 miles of conveyance pipeline. This is more than two times the construction cost of the Carlsbad facility[10].

Few SWRO facilities exist employing an intake type differing from the conventional open-intake. This lack of available installations for use as a qualitative benchmark for costing same-site alternatives is important for planners and engineers focused on process considerations and/or cost comparisons. However, published information is limited and can be site-specific. Generalized guidance is contained in Table 1. Source types range from beach wells to open-ocean intakes.

10 Lopez, Cesar (SDCWA): "Camp Pendleton SWRO Feasibility Study", AMTA Annual Conference and Exposition, San Diego, CA, July 12, 2010.

Table 1
Comparative Water Quality, Cost, and Reliability from Various Intake Types

Intake Type	Relative Cost (for equal capacity)	Relative Intake Space Requirements	Relative Pretreatment Space Requirements	Reliability
Beach Wells	Low	High	Theoretically Less	Variable based on subsurface lithology
Horizontal Directional-Drilled Wells	Medium	High	Theoretically Less	Unknown
Radial Wells	Medium	High	Theoretically Less	Unknown
Constructed Seabed / infiltration Gallery	High	Medium	Theoretically Less	Unknown
Submerged Open Intake	Medium-Low	Low	More	High
Surface – Open Intake	Low	Low	More	High
Co-located Intake	Low	Low	More	High

By definition, the reverse osmosis desalination process creates two flow streams at a ratio of approximately 50:50. The “concentrate” stream is about twice as salty as the feed water.

Various methods are available to dispose of the concentrate stream, and the availability of alternatives will vary due to many site-specific variables. With that consideration, conveyance alternatives and a range of costs associated with each alternative are contained in Table 2. The costs do not include conveyance attributable to connecting the desalination plant to the disposal location (in the case of discharge to the ocean, this would be from the desalination plant to the shore line) because the conveyance distance, terrain, and associated costs are site-specific and highly variable, and this conveyance cost can dominate disposal costs.

Table 2
Concentrate Disposal Costs[11]

Disposal Method	Construction Cost	
	(US$ MM / MGD)	(US$ MM /acre-foot/day)
New Outfall w/Diffusers	2.0 – 5.5	0.7 - 1.8
Power Plant Outfall	0.2 – 0.6	0.07 - 0.20
Sanitary Sewer	0.1 – 0.4	0.03 - 0.13
WWTP Outfall	0.3 – 2.0	0.1 - 0.7
Deep Well Injection	2.5 – 6.0	0.8 - 2.0
Evaporation Ponds	3.0 – 9.5	1.0 - 3.1
Zero-Liquid Discharge	5.5 – 15.0	1.8 - 4.9

Regarding cost trends and the upward spikes observed in the most recent Australian SWRO projects in Figure 3, the plant discharges were located in the vicinity of marine habitats with high sensitivity to elevated salinity (compared to those encountered by the US projects). These designs resulted in the need to build complex concentrate discharge diffuser systems, with costs, in most cases, exceeding 30% of the total desalination project expenditures. By comparison, most of the desalination plants yielding the lowest water production costs have concentrate discharges either located in coastal areas with very intensive natural mixing or are combined with power plant outfall structures which use the buoyancy of the warm power plant cooling water to provide accelerated initial mixing and salinity plume dissipation at lower cost. The intake and discharge facility costs for these plants are usually less than 10% of the total desalination plant costs, which is much less significant compared to the US projects' cost estimates as a total percentage of costs.

B. Feed and Finished Water Quality

The type of pretreatment system and type of pretreatment technology selected are very dependent on the feed water quality. Because open ocean feed water (compared with well water, for example) will typically contain a greater level of suspended material and impurities that could possibly foul a reverse osmosis membrane, the capability of the pretreatment necessary to suitably pre-condition the feed water is crucial to

11 Adapted from Wright and Missimer, 1997.

ensure a long, sustainable membrane service life. For example, some coastal well water supplies and certain open ocean sources are generally expected to contain very low levels of foulants and particulates; therefore, a lesser-degree of pretreatment may be warranted. It is important to keep this point in context, because suspended material content (e.g., iron, sulfur, manganese) of coastal ocean locations is site-specific and could eliminate the potential benefit of a lesser-degree of pretreatment and the associated capital and operational costs.

Typical costs associated with pretreatment will range from US$ 0.5MM to US$ 1.5MM per MGD. The lower range of costs is representative of a conventional single-stage media filtration system, which is a technology that has been in service treating public water supplies since the 1700's. Costs will increase as additional pretreatment process steps are added, such as two-stages of media filters, or media filtration followed by a micro- or ultrafiltration membrane system which approaches the higher end of the cost range.

Additionally, as with any seawater desalination project, the feed water temperature, source water "cleanliness" (such as suspended biomass or turbidity), and ambient salinity fluctuations also affect project costs. For example, if a SWRO facility planned along the Northern California coast treats seawater that is on average 10 degrees colder than a SWRO facility located in Southern California, the necessary feed pressure would increase 10 to 15% over the warmer water to achieve the equivalent production value, thereby increasing energy consumption and associated operating costs.

Base-line costs for the desalination component of a facility usually range from US$ 1.5MM to US$ 4.0MM/MGD. The lower range of costs represents a single stage, single pass SWRO system which is capable of reliably meeting a TDS of less than 450 mg/L. Individual analyte concentration limitations such as boron or chloride (for horticultural water quality purposes) can also affect costs, because at very low concentration limits an additional membrane treatment step might be necessary. If this is the case, additional costs associated with producing a lower TDS product water will increase from 15 to 30% of the cost of the single stage, single pass system. Table 3 contains relative finished water treatment costs within the fence line of a desalination facility compared to base-line desalination system costs.

Table 3
Target Finished Water Quality and Relative Cost; $MM/MGD

Target Finished Water Quality	Construction Costs, $MM/MGD	Operation and Maintenance Costs, $MM/MGD	Cost of Water, $MM/MGD[12]
TDS:Cl = 500[13]:250 mg/L Boron = 1 mg/L	1.0	1.0	1.0
TDS:Cl = 250:100 mg/L Boron = 0.75 mg/L	1.15 – 1.25	1.05 – 1.10	1.10 – 1.18
TDS:Cl = 100:50 mg/L Boron = 0.5 mg/L	1.27-1.38	1.18-1.25	1.23-1.32
TDS:Cl = 30:10 mg/L Boron = 0.3 mg/L	1.40-1.55	1.32-1.45	1.36-1.50

C. Distribution

Throughput (or "production") capacity of a desalination facility (as with any other type of production facility) affects the size and number of the equipment needed, as well as the space necessary to locate a treatment plant. Coastal communities utilizing desalination as a source of drinking water are usually in close proximity to the treatment facility; therefore, land is usually priced at a premium. The cost of locating a facility closer to the point of use and a suitable power source should be weighed against the costs associated with additional intake and discharge pipeline easements, transmission line costs, materials used for construction, permits, labor, and maintenance associated with moving a plant farther away from an intake/discharge or distribution service area. By material cost alone, a 20-mile distribution system delivering 50 MGD could increase by 15 to 30% of total project capital costs (or more) when compared to a 2-mile pipeline based on available easements, rights of-way, and existing subsurface utilities.

The project sites in Australia are between 10 and 50 miles from the points of delivery, and, in the case of the 66 MGD Sydney SWRO facility, the cost of the product water delivery system was greater than the cost of the SWRO treatment plant (Plant cost $7.80/kgal[14]; US$ 586MM[15] vs. US$ 490MM). The cost breakdown is also similar for the Melbourne, Australia plant.

D. Permitting and Regulatory Issues

The regulatory landscape differs vastly in the communities served by desalination facilities. These differences can have a profound impact on project delivery timelines, legal costs, and in some cases alter the design of the SWRO facility. Without question, each country has its own set of environmental criteria which must be met by any single project. And in consideration of laws in the United States, each State and

12 Dietrich Consulting Group, LLC.
13 500 mg/L drinking water quality limitation is a United States EPA Secondary Water Quality Standard.
14 Water Desalination Report, Volume 46, Issue 29, August 2, 2010.
15 Water Desalination Report, Volume 46, Issue 16, April 26, 2010.

region has its own set of rules, regulations, and standards, all of which conform to federal laws and guidelines while potentially being more restrictive, and usually related to site-specific nuances.
For example, permitting costs for the Tampa, Florida 25 MGD SWRO project are estimated to have been US$ 2.5MM – US$ 5MM while permitting costs for 10 – 50 MGD projects in California can exceed US$ 10MM –20MM. Permitting costs can also be bracketed by project complexity. For low-complexity projects, the permitting cost is 0.5 to 3.5% of the total capital cost of SWRO projects. For high-complexity projects, permitting is estimated at 4.5 to 5.0% of the total project capital costs. Finally, actual permitting costs will also depend on degree of membrane piloting or demonstration work (if necessary), extent of local/state permit hearings, and Federal CWA Section 401/404 offshore permitting, as applicable[16].

Whereas Australia has invested upwards of US$ 13 billion in numerous large-scale desalination projects producing 500 MGD over the last six years, the US has only been successful at bringing online one 25 MGD SWRO desalination facility in Tampa, FL at US$ 150MM. Additionally, major California projects such as Carlsbad and Huntington Beach have taken over 11 years to develop and permit, mainly due to permitting challenges and land use considerations.

E. Project Delivery Mechanism

A number of project delivery methods and financing tools have proven to be successful in the SWRO desalination industry. The size of the project, expected contract duration, location, competition, risk allocation, and project (owner) preferences all dictate by what means the project is delivered. For example, the combination of large capacity SWRO facilities, enhanced competition, and owner preferences for low-risk have enabled the design- build- own- operate (DBOOT) project delivery community to commission SWRO projects at an exceptionally low all-inclusive cost of US$ 800 – US$ 1,000/ac-ft. in North Africa. Without exception, the lowest cost desalination projects to date have been delivered under turnkey DBOOT contracts where private sector developers or consortia share risks with the public sector based to their ability to control and mitigate the respective project related risks. A contributing cause to the lower costs are that the insurance and contingencies in DBOOT contracts are between 10 and 20% of the total capital cost of the project; whereas similar costs for the more traditional project design/bid/build projects can be higher.

One other delivery method, recently applied to large SWRO projects in Australia, is the Owner-Engineer-Contractor “Alliance” approach. The alliance model is an alternative means to further minimize and isolate the owner risks involved in procuring large-scale desalination plants. The alliance model incorporates a two-stage bidding process involving selection of qualified private sector companies and then engages the top-two companies in a competitive project development phase (which is paid for by the owner). Although the risk and reward mechanisms between the owner and engineer/contractor are negotiable, the insurance and contingency premiums are historically more than 30% of the total project costs.

16 Wilf, M., Awerbuch, L., Bartels, C., Mickley, M., Pearce, G., Voutchkov, N., 2007. *The Guidebook to Membrane Desalination Technology: Reverse Osmosis, Nanofiltration and Hybrid Systems Process Design, Applications and Economics*. Balaban Publishers, Rehovot, Israel.

F. Other Associated Costs

Other associated project costs include proximity to a power supply, the availability of skilled labor, and environmental mitigation. These cost impacts may be the result of market conditions or issues unknown during the conceptual design process. For example, the overlapping schedules of the series of large Australian SWRO projects created a temporary shortage of skilled labor, which in turn resulted in an increase in unit labor costs. Because skilled labor expenditures can consume up to 50% of the construction costs, a facilities' construction cost can increase by 20% or more.

In several instances involving Spanish desalination projects, substantial project delays were caused by the inability of the local power company to install power substations and transmission lines; or, the receiving water authority did not adequately plan system integration and distribution pipelines for the product water, thereby substantially increasing the total project costs. This has also been a challenge in some regions of South Africa.

IV Capital Cost Breakdown

Costs associated with a desalination plant can be annualized to provide a frame of reference to the total cost of water produced, and in some cases, delivered to the actual point of use for each particular project. These annualized costs can be quite complex and are based on a number of variables including the amount financed, interest rate, loan period, inflation, depreciation, plant utilization, and more. For a frame of reference, the typical annualized costs for seawater desalination projects vary widely from US $2.00/1,000 gallons (kgal) to $12.00/kgal. The higher end of the cost range is associated with smaller capacity plants (less than 1 MGD), because economies of scale cannot be realized, or can be attributed to site-specific intake, discharge, and conveyance. If the intake, discharge, and conveyance components are removed from the annualized cost, the range narrows from US $2.00/kgal to approximately $6.00/kgal. By comparison, the range for brackish water membrane desalinating processes (BWRO) is US $0.40/kgal to $4.00/kgal.

Because of the potentially wide-ranging cost differences between projects, unit cost contributions associated with the overall plant cost can be clarified by breaking down plant costs by contribution type. For example, as seen in Figure 5, the intake and discharge costs associated with construction are approximately 10 to 12% of the total plant costs. Please note that Figure 5 is an example of typical project plant costs, and site specific cost contributions associated with key components such as the unit cost of power, distance for distribution, and labor, for example, will alter the ratio accordingly.

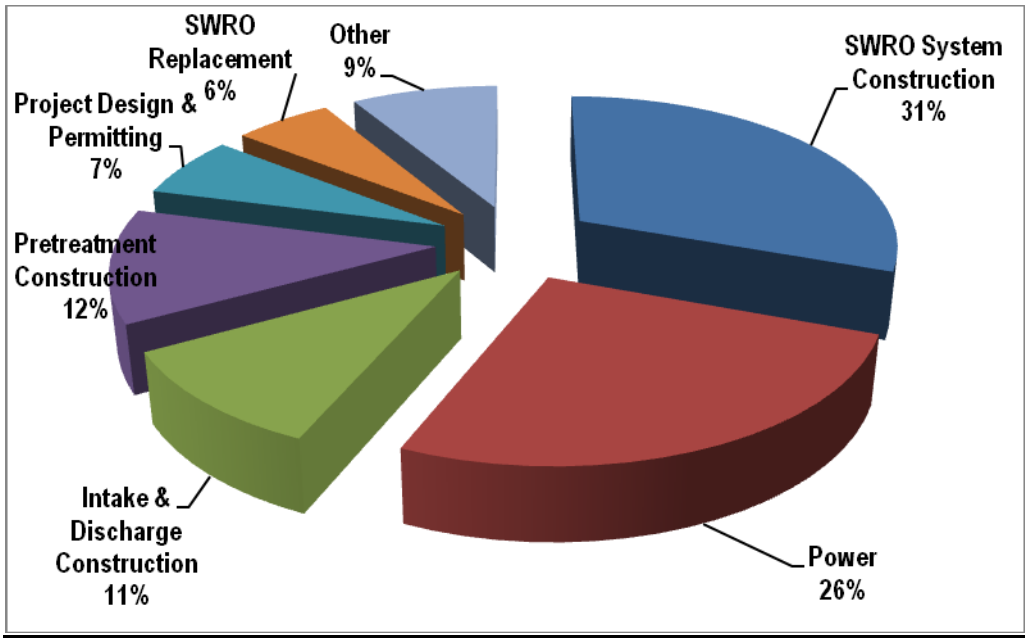

Figure 5[17]
Typical SWRO Plant Construction Cost Breakdown

V Operation and Maintenance Cost Breakdown

All drinking water production facilities require operational attention and regular maintenance to ensure a long, productive and efficient plant. A typical design lifespan for a water production facility is 20 to 30-years, based on the size of the facility; financial terms and arrangements; and procurement method (such as BOOT, DBO, D-B, etc.). However, regardless of procurement type, the typical plant operation and maintenance costs (O&M) are associated with the parameters described in Table 4.

17 Dietrich Consulting Group, LLC.

Table 4
Operation and Maintenance Parameters for Desalination Plants (*Typical Example*)[18]

Cost Association	Parameter	Percentage of Total O&M Costs
Maintenance	Instruments Pump upkeep Facility upkeep including intake pipeline pigging Minor equipment replacement Video/CCTV intake/wells and associated cleaning	6%
Legal/Permitting	Environmental monitoring Permit compliance	2%
Operations	Labor	6%
	Sludge and solids waste disposal Bar rack and band screen solids waste disposal	4%
	Cartridge Filters and RO Membrane Replacements	11%
	Power (Energy)	55%
	Chemicals	6%
	Other Related	10%

Some examples of the sub-components contributing to the total percentage of O&M costs contained in Table 4 are affected by locale. Trends such as increasing power; solid waste disposal, or increases in chemical costs would shift the allocation. Regarding power, typical costs for labor and power associated with water treatment production are 45% (labor) and 25% (power) higher in California, compared to Florida or Texas.

VI Cost Comparison with Other Water Supply Alternatives – a California Perspective

The cost of desalinated water has decreased significantly over the last two decades; and, all indicators are that the costs associated with the technology will continue to decrease as technology and efficiencies improve. However, similarly sized facilities do not always offer comparative costs for a number of reasons, including feed water and finished water quality goals, intake type, and distance to service area. All of these factors can have a marked effect on the overall cost of water. The importance of understanding these differences cannot be overemphasized when describing costs related to various desalination projects and treating different source waters.

Although there is only one large-scale seawater desalination facility in the United States, those that are in the planning and budgetary cost stage appear to be highest in California compared to the majority of the United States. Due to the large number of plants under consideration in California compared to the rest of the country, the cost warrants further discussion. The cost of desalination in California is relatively higher than that of traditional low-cost water sources (groundwater and river water), as well as water reclamation

18 Dietrich Consulting Group, LLC.

and reuse for irrigation and industrial use purposes. In fact, the cost of traditional local groundwater water supplies in some parts of the state is as "low" as US $0.50/1,000 gallons ($160/AF, annualized). However, the quantity of such low-cost sources is very limited (less than 30% of the water resources statewide), and water quality has become an issue in certain areas.

In California, many water agencies have embarked on exploring seawater desalination because of the diminishing capacities of fresh surface and ground water. Most of the water utilities in Southern California currently purchase imported water from the Bay Delta and Colorado River at a rate of US $2.30 to $2.45/1,000 gallons ($750 to $800/AF), and the cost of these water supplies is very likely to increase by 15% or more through 2015 due to additional expenditures needed to comply with more stringent drinking water quality regulatory requirements promulgated by the US EPA.

Based on the 2006 California Water Charge Survey published in July 2006 by Black & Veatch (http://www.bvaeservices.com/news/articles/jul06/ca_survey_businesswire.htm), the average residential monthly charge for 1500 cubic feet of drinking water was US $36.39 (US $3.24/1,000 gallons or $1,058/AF). The survey also indicates that the cost of residential water supply has increased by 16.7% since 2003.

The great majority of projects included in the California desalination initiative were at one time considered "premature." However, water utilities and stakeholders are once again considering whether desalination product water today at a cost of US $2.91 to $3.7/1,000 gallons ($850 to $1,200/AF)[19] is too expensive. If the cost comparison of desalination versus other traditional supplies is made on a "comparable basis" suggesting that all components affecting the cost of water are accounted for, then the costs for production of desalinated seawater would be similar to the future total costs for delivery of new incremental water supplies to many parts of the state (especially to municipalities and utilities in Southern California relying on imported water supplies). For example, the commodity charge for one large California municipal water district is US $935 to $1,060/AF without a desalination component[20]. Another example is Figure 6, which contains a projection of the comparative costs associated with importing water into San Diego in the southernmost region of California in 2020[21].

19 In 2005 dollars; based on asset life of 30 years and unit power costs of US$0.08/kWh to US$0.11/kWh.
20 West Basin Municipal Water District FY 2010-2011 Water Rates and Charges; includes MWD RTS and Reliability Service Charge.
21 San Diego County Water Authority, September 2010 Planning Committee.

Figure 6
2020 Imported Water Supply Costs, Southern California[22]

The argument was made at one time that desalinating seawater and brackish water is generally more expensive than the production of reclaimed water and the implementation of water conservation measures. However, with the exception of potable reuse, water conservation and recycling do not create new sources of drinking water. Also, under conditions of prolonged drought when the available water resources cannot be replenished at the rate of their use, aggressive reuse and conservation can help but may not completely alleviate the need for new water resources and water rationing. Simply put, if your backyard well is dry, you cannot solve your household water supply challenges by reusing or conserving more of the well water which you do not have.

The primary differences stem from the significant reduction of the costs for seawater and brackish water desalination since the early 2000's and the incrementally higher costs associated with achieving goals such as dramatic increases in water reuse and conservation after such measures have already been implemented.

In the early nineties, comprehensive conservation and reuse were uncommon for the majority of the municipalities in California, as the prolonged drought during this period forced many utilities to implement low-cost water reuse and conservation measures that now comprise 5 to 15% of their water portfolios. Utilities already having comprehensive water reuse and conservation programs simply cannot squeeze an additional 10 to 15% of water savings via the same low-cost reuse and conservation measures. Implementing the next tier of more sophisticated equipment and technology-intensive reuse and conservation measures to reach water-saving goals of 20 to 25% comes at a price which, in some cases, may approach that of desalination.

Without normalizing data from foreign desalination plants for the site specific conditions in California (labor, construction, equipment costs, etc.), electrical energy accounts for between 30 and 40% of the total water

22 REGIONAL STRATEGIES: PEAK DEMAND GAP & CRITICAL PEAK PRICING, Shahid Chaudhry, California Energy Commission, August 2005. Energy Workshops for W&WW Agencies.

production costs of a typical membrane seawater desalination plant. Due to site-specific differences, the power costs for seawater desalination in California contribute closer to 20 to 30% of the total costs of water production. Therefore, fluctuations in international fuel markets will not have a dramatic effect on the viability of desalination as has been assumed previously. It should also be noted that unit energy cost increases affect all water supply alternatives, largely due to the energy intensive nature of transporting water from Northern California to Southern California.

VII Challenges and Perceptions

During a period of prolonged drought in California in the early nineties, emergency fast-track implementation of a number of water desalination projects began, setting the stage for many potentially biased perceptions at the time concerning the relatively high cost of seawater desalination. Today, some of those perceptions about costs associated with seawater desalination remain, thus posing challenges to professionals, planners, and stakeholders alike.

The perception that seawater desalination can be a drought-proof alternative to other water supplies has enabled other utilities and water suppliers around the world to effectively incorporate seawater desalination as one alternative to dwindling (or unavailable) water supplies. In the US, for example, Tampa Bay, Florida has implemented seawater desalination as a drought-proof measure. In particular, and under consent order by the State of Florida and the Southwest Florida Water Management District, this measure was determined to be a necessity in order to alleviate wellfield over-pumping and devastation of wetlands[23]. By some arguable accounts, thousands of acres of wetlands that had virtually "dried up" over many years began to fill with water.

There is also the perception that the site-specific costs associated with intake or concentrate disposal may develop (or trend) upward, and may not outweigh the potential benefit of a drought-proof resource. This trend will be influenced by the regulatory environment (specifically regarding the intake facility) and is not associated with the cost of the desalination processes or concentrate disposal. For example, in Tampa, a comprehensive environmental study beginning in 2002[24] revealed that, to date, there is no indication that the SWRO desalination facility concentrate has had an adverse impact on Tampa Bay. Therefore, the costs associated with co-locating with a nearby power plant and the associated mixing and dilution can be reliable when applied to other similar co-located projects.

VIII Concluding Remarks

One of the most sensitive and critical aspects of any water project is cost. Membrane desalination has experienced an overall downward trend in overall costs, and technological advances will continue to bring costs down even further. Additionally, when investigating the costs associated with desalination compared

23 Southwest Florida Water Management District (http://www.swfwmd.state.fl.us/) wetland recovery strategy.
24 Study commissioned by Tampa Bay Water and administered by PBS&J.

to other supplies, comparable cost estimating practices will tend to level the playing field when all of the costs associated with delivering water are considered.

However, as with any infrastructure project, it is important to recognize that the various components supporting the overall desalination treatment facility can vary significantly and are based on site location. For membrane desalination, decreasing technological costs, the drought-proof nature of the process, and producing superior water quality are among a number of significant reasons why this application is the water treatment technology of choice in the United States and around the world.

San Antonio and Nacimiento Rivers Watershed Management Plan

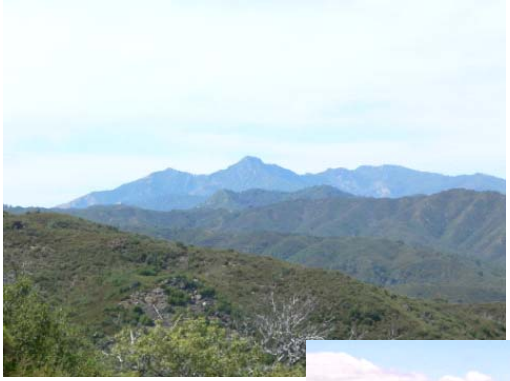

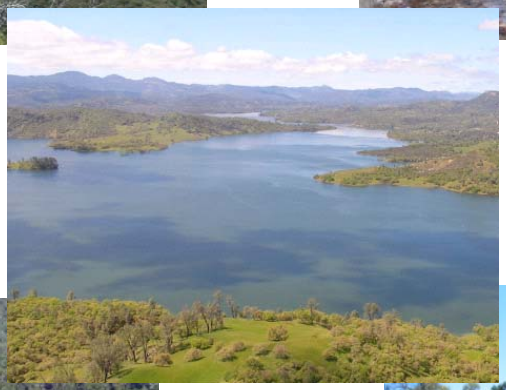

October 2008

Prepared by
the Nacitone Watersheds Steering Committee and
Central Coast Salmon Enhancement, Inc.

Prepared for
the Monterey County Water Resources Agency and
the State Water Resources Control Board

Funding for this project has been provided in full or in part through an agreement with the State Water Resources Control Board. The contents of this document do not necessarily reflect the views and policies of the State Water Resources Control Board, nor does mention of trade names or commercial products constitute endorsement or recommendations for use.

(This page intentionally left blank)

Acknowledgements

Facilitation of the Nacitone Watersheds Planning Process was managed by Traci Roberts of the Monterey County Farm Bureau. Stephnie Wald of Central Coast Salmon Enhancement prepared the watershed management plan with grateful assistance of Nicole Smith, Elise Torres, and Sarah Paddack. The preparation of the management plan was guided by Steering Committee Co-chairs Duane Wolgomott and Phil Humphrey. Ken Ekelund of the Monterey County Water Resources Agency managed the SWRCB grant that funded the Nacitone Watersheds Management Plan.

Each member of the Steering Committee also contributed valuable information and assistance and is acknowledged below.

Ann Beckett, *Lockwood resident*

Marilyn Breland, *Heritage Ranch resident*

Bill Capps, *Nacimiento Regional Water Management Advisory Committee*

Terry Chavis, *Heritage Ranch resident*

Ken Ekelund, *Program Manager, Monterey County Water Resources Agency*

Letty French, *Nacimiento watershed resident*

Adrienne Greve, *Assistant Professor, City & Regional Planning Department, Cal Poly San Luis Obispo*

Michel Hardoy, *Lockwood resident*

Wally Haussamen, *Fort Hunter Liggett, Natural Resources Manager*

Phil Humfrey, *Nacimiento Regional Water Management Advisory Committee*

Mary Ann Martinus, *Lockwood resident*

David Osgood, *Nacimiento watershed resident; Chair, Adelaide Farm Center*

Dennis Palm, *Ventana Wilderness Alliance*

Lester Patterson, *Lockwood resident*

Eric Peterson, *Lime Mountain Mining Company*

Bill Phillips, *MCWRA Deputy General Manager*

Kim Roth, *Lockwood resident*

Tom Shepherd, *Monterey County Parks & Recreation*

Scott Smith, *Vice Chair, Adelaide Farm Center*

Lisa Wallender, *Water Systems Chemist, Public Works Department, County of San Luis Obispo*

Mark Williams, *Camp Roberts, Environmental Chief*

Duane Wolgamott, *Lockwood resident*

The members of the Technical Advisory Committee made themselves available for the betterment of this document and are listed below.

Ann Beckett, *Historian and Lockwood resident*

Rob Atwill, *Doctor, UC Davis, School of Veterinerian Medicine*

John Bradford, *US Forest Service, District Ranger*

James Caruso, *Senior Planner, SLO County*

John D'Ornellas, *Heritage Ranch Community Service District Manager*

Ken Ekelund, *Monterey County Water Resources Agency*

Jill Falcone, *Environmental Resource Specialist, County of San Luis Obispo, Dept. of Public Works*

Joy Fitzhugh, *San Luis Obispo County Farm Bureau*

Howard Franklin, *Hydrologist, Monterey County Water Resources Agency*

DJ Funk, *Executive Directory, Upper Salinas Las Tablas Resource Conservation District*

Steve Knudsen, *San Luis Obispo County Farm Bureau*

Robert LaFluer, *Natural Resources Conservation Service, U.S. Dept. of Agriculture (Salinas Service Center)*

Royce Larsen, *UC Cooperative Extension, Area Natural Resources, Watershed Advisory*

Margy Lindquist, *Natural Resources Conservation Service, U.S. Dept. of Agriculture (Templeton Service Center)*

Danny Marquis, *Natural Resources Conservation Service, U.S. Department of Agriculture*

Steve Mason, *Land Use Technician, Planning Department, County of Monterey*

Kay Mercer, *Agriculture Water Quality Consultant, Kay Mercer, Inc.*

Donna Meyers, *Big Sur Land Trust*

Elizabeth Painter, *Botanist*

Margaret Paul, *California Department of Fish and Game*

Paul Robins, *Executive Director, Resource Conservation District of Monterey County*

Mary Root, *Conservation Partnerships Coordinator, U.S. Fish & Wildlife Service*

Bob Schubert, *Senior Planner, Planning Department, County of Monterey*

Kelly Sorenson, *Ventana Wilderness Society*

Ken Tate, *Rangeland Watershed Specialist, Cooperative Extension, Department of Plant Sciences, UC Davis*

Kathy Thomasberg, *Water Quality Specialist, Monterey County Water Resources Agency*

Lisa Wallender, *Water Systems Chemist, SLO County Public Works*

Mark Williams, *Environmental Chief, Camp Roberts*

Duane Wolgamott

Phil Humfrey

Executive Summary

There are two aspects to the development of any watershed plan. Dedicated people spent countless hours discussing concerns, issues and potential solutions to problems. This dedication leads to the production of documents that hope to articulate the outcome of the dialog in a way that is useful for the community. The executive summary identifies the Nacitone Watersheds Management process and products, and attempts to capture the major core findings arising out of both efforts.

The Vision

The Nacimiento/San Antonio River Watersheds Management Plan should protect water quality and watershed uses for all stakeholders.

The Purpose

The purpose of the Nacitone Watersheds Management Plan is to identify the existing conditions of and stresses in these watersheds as they relate to water quality, and recommend methods for reducing or eliminating those stressors such as alternative land use practices.

The Process

The Nacitone Watersheds Management planning process is a stakeholder driven process that represents the interests of residents, agencies and businesses that work and live in the watersheds. The stakeholder process used to produce these products presents an investment of 8800 volunteer hours of time in meetings, field trips, community outreach and planning. The magnitude of the effort includes far more than this if one includes the hundreds of contacts made through flyers, press releases and web-site visits. Each of the products was placed on the web-site for public review. Public comment periods were held for the Goals and Strategies document and the Watershed Management Plan. There were Steering and Technical Advisory Committees as well as a staff team guiding the process and development of the products. The members of each are listed in the acknowledgement section of the plan and referenced in Part 1 "How the Plan was Prepared."

The Products

The Nacitone Watersheds Plan was initiated by the Monterey County Water Resources Agency (MCWRA) and funded by a grant from the Regional Water Quality Control Board. As part of the grant, several products were produced to assist the watershed stakeholders in gathering and analyzing existing information about the watersheds to discern critical issues facing the watersheds and potential remedies. These products include:

Watershed Resources Inventory (WRI)—Existing watershed information was identified including reports, studies, maps, Geographic Information System (GIS) files, and technical data covering land use, water supply, water quality, ecology, hydrology, habitat and vegetation, agricultural and grazing practices, and planning efforts. The inventory is comprised of a spreadsheet file containing over 300 entries as well as an annotated bibliography of a select number of the entries.

Analysis of the WRI (Analysis)— Existing information was compiled in order to establish a baseline describing existing watershed conditions including land use, major water features, water quality, water supply, designated beneficial uses, point and nonpoint sources of water pollution, population, infrastructure, vegetation and habitat, and agricultural and grazing practices. Trends were identified for those items that had sufficient historical data. The Analysis did not include a technical review of compiled information.

Grazing Land Management Plan—the Upper Salinas/Las Tablas Resource Conservation District conducted an assessment of the 24,000 acres of grazing land owned and managed by the MCWRA at the Nacimiento and San Antonio Reservoirs to determine impacts on water quality, maintenance of ecological communities, and management of sustainable and restorative grazing.

Watershed Goals and Strategies—The WRI and Analysis were utilized by the stakeholder group to articulate goals and planning strategies for future watershed activities that focus on water quality improvements. These include non-regulatory approaches to watershed protection, integration of watershed planning with existing government planning activities, land use planning strategies for watershed protection and potential partnership scenarios which could serve to protect the health of the watershed. In addition, the stakeholders identified research and monitoring opportunities to fill data gaps to address issues of concern, identified many roles and associated responsibilities of stakeholders in implementation of the proposed actions and strategies as well as draft time frames for implementation.

Watersheds Management Plan—The Plan is an integration of the above products and includes the geographic boundaries of the watershed, a description of the natural resource conditions within the watershed, a series of goals, objectives and implementation measures for achieving and sustaining water quality improvements, and description of how to monitor, update and maintain the Plan as a living document. The plan is divided into four sections.

- Part 1 includes purpose and need for the plan and plan preparation.
- Part 2 is the Existing Conditions section which identifies physical and current conditions of the watersheds.
- Part 3 is the Watershed Strategy which identifies roles, responsibilities and potential implementation measures for protecting watershed health.
- Part 4 includes the jurisdictional and regulatory framework.

Appendices to the Plan include complete auxiliary supporting documents (The Grazing Lands Management Plan and the Nacitone Watershed Resources Inventory Final Technical Memorandum—Water Resources, Water Quality and Sediment Supply prepared by Swanson Hydrology and Geomorphology), WRI Spreadsheet and Annotated Bibliography, public and Technical Advisory Committee (TAC) comments, Low Impact Development (LID) primer, Resources for Residents and Landowners, Community Services Area (CSA) 7 Interceptor Bypass Study Executive Summary, Watershed Strategy Priorities Chart and maps.

The Core Findings

There is an abundance of information about the watersheds and while there is great concern about present and future water quality, the Klau/Buena Vista Mines Mercury situation appears to be the only documented water quality issue in either watershed. Stakeholders have become aware that while there may be additional water quality problems, there is no coordinated monitoring approach to determine level of concern.

The complexity of landownership and cross-jurisdictional authority of both San Luis Obispo and Monterey Counties present unique challenges for resolving present and future water quality concerns. The addition of state and federal regulations for source water supply and water quality can add further complexity to local efforts in that finding solutions to water quality issues can lead residents and landowners to conflicting regulations.

The interests of stakeholders living and working in the watersheds and the interests of the MCWRA and other agencies have not always been well aligned. This plan attempts to, in part, rectify this situation as the MCWRA and the stakeholders begin to share responsibility in finding ways to effectively manage watershed resources.

The Watershed Strategy (Part 3) is structured toward partnership approaches to water quality protection.

Legacy landowners (those who have been stewards of the land for generations and may date back to original land grants) play a central role in establishing desired outcomes in terms of defining future trends within a watershed.

The Steering Committee considered the following list to be the top priorities for action in the Nacitone Watersheds over the short and long term. (See table on following page.)

Prioritization of Plan implementations (recommended actions)

Top priorities that emerged from the stakeholder process :	
Short term (1-2 years)	**Long term (5-10 years)**
Continue the Nacitone Watersheds Steering Committee by seeking funding and contracting with a watershed coordinator/grant writer.	
Support the development and maintenance of Round Tables with an Inter-county Task Force on land use and water resources planning as the top priority Round Table (Issue 7)	
Monterey County, San Luis Obispo County and resident associations should work together to develop and implement programs to control invasive species. (Issue 11, Implementations 1C)	
Water quality monitoring, interpretation, and coordination across multiple entities. Continue existing water quality monitoring. In addition, establish a comprehensive water quality monitoring program with uniform collection, analysis and reporting protocols across pertinent jurisdictions for technical and public sector use. As part of this information gathering, encourage EPA to conduct a lake bottom sediment study of Nacimiento reservoir to better understand mercury contamination.	Support for SLO County to eliminate the risk to water quality of the Oak Shores Interceptor line at Nacimiento reservoir.
Support the work of existing Local Fire Safe Councils (Issue 5, Implementation 1B)	
Conduct road system survey to prioritize needs for erosion control. Include a focused survey on the Tank Road in coordination with military, etc. (Issue 9, Implementations 1B and 2B)	Implement proposed upgrades to the Tank Road and others within these watersheds in coordination with others. (Issue 9, Implementation 2B)
Collaborate on the design and implementation of educational stewardship campaigns targeting watershed residents and visitors with customized messages such as “Be A Watershed Citizen.”	

Table of Contents

ACKNOWLEDGEMENTS 3
EXECUTIVE SUMMARY 5

PART 1 Introduction
A. Purpose and Need for the Plan 11
B. How the Plan was Prepared 11
C. Vision Statement & Guiding Principles 12
D. Balancing Watershed Uses through Thoughtful Communication 13
E. Water Quality and Watershed Healthby Identifying and Preventing Impacts 13

PART 2 Existing Conditions
I. Physical Features of the Watershed 15
A. Location and Overview of the Area 15
B. Geology 19

II. Description of Current Conditions of the Watershed
A. Hydrology 21
B. Vegetation and Habitat 30
C. Water Quality 39
D. Watershed Uses 59
E. Reservoir Features and Management 75
F. Demographics 83

PART 3 Watershed Strategies
A. From Issues to Recommendations 89
B. Prioritizing Recommendations 90
C. Watershed Issues, Goals and Recommendations 93
D. From Recommendation to Action: A Living Plan 132
E. Pending Changes in the Watersheds 135

PART 4 Jurisdictional and Existing Regulatory Frameworks
A. Regulatory Agencies 137
B. Legal Regulatory Framework 149
C. Resource Agencies - Non-Regulatory Entities 150
D. Relationship to Other Existing Plans 156

References 165
Glossary 171
Abbreviations 173
Resources for Residents and Landowners 175

Appendices
A. WRI Spreadsheet
B. WRI Annotated Bibliography
C. Agency Grazing Lands Management Plan
D. Technical Memorandum—Water Resources, Water Quality and Sediment Supply
E. Comments from Public and TAC
F. LID Primer
G. Resources for Residents and Landowners
H. CSA 7 Interceptor Bypass Study Executive Summary
I. Watershed Strategy Priorities Chart
J. Maps

(This page intentionally left blank)

PART 1
Introduction

A. Purpose and Need for the Plan

The purpose of the Nacitone Watersheds Management Plan is to identify the existing conditions of and stresses in these watersheds as they relate to water quality, and recommend methods for reducing or eliminating those stressors such as alternative land use practices.

The Monterey County Water Resources Agency (MCWRA) has an interest in creating a plan for the following reasons:

- The reservoirs and their respective watersheds are the source for water recharging the Salinas Valley groundwater basin.
- There is a direct correlation between the health of these watersheds and the supply and quality of water for the Salinas Valley.
- The Salinas Valley's population and economy are dependent on a long-term supply of high quality water from those watersheds, and on protection from floods.
- The reservoirs also provide ancillary benefits of recreation and habitat enhancement.

The communities around the reservoirs have an interest in insuring that the watersheds remain healthy. The land around San Antonio Reservoir, also known as Lake San Antonio, is located in Monterey County and is mostly owned by Monterey County. While Nacimiento Reservoir, also known as Lake Nacimiento, is located in San Luis Obispo County, it is managed by the Monterey County Water Resources Agency. About half of the land around Nacimiento Reservoir is owned by approximately 5,000 private owners who want to make sure the watersheds and reservoir remain healthy to protect property values and business interests that depend on the reservoir. Another reason to keep the watersheds healthy is that San Luis Obispo County will soon annually draw up to 17,500 acre feet of water from Nacimiento Reservoir as "raw" water to be treated and used as drinking water.

Source water supply and water quality are increasingly regulated by the State of California and the United States government. The MCWRA expects that trend to continue, while believing that locally based initiatives are preferable to regulatory actions imposed by higher levels of government. The MCWRA believes it should lead efforts to involve local landowners and other stakeholders in the watersheds to identify methods by which high quality water supplies can be maintained over the long-term, rather than merely react to studies and organizational efforts conducted by others.

B. How the Plan was Prepared

Following submittal of a watershed management plan grant request by MCWRA to the Regional Water Quality Control Board, MCWRA staff was invited to several community meetings in Lockwood. At these meetings, community members had the opportunity to ask about the purpose of a plan, what it might mean for property owners, and what the role of the MCWRA

and other government agencies already engaged would be in regards to plan development. A Steering Committee (SC) of stakeholders was formed who negotiated an agreement with MCWRA that the Steering Committee would have the final decision on how the plan was developed and that, if need be, local residents would have greater influence over decisions for the plan than other Steering Committee members and other stakeholder interests.

The Steering Committee then selected a facilitator for the process and a plan writer. MCWRA provided the necessary contracts for the facilitator and plan writer. The Steering Committee, Facilitator, and Plan Writer developed a Technical Advisory Committee (TAC). The SC and TAC were then facilitated to generate guidance for the staff team for the production of each of the work products described in the Executive Summary. The staff team generated agendas, meeting notes and draft documents for SC and TAC review. The staff team was comprised of the SC Co-chairs, Facilitator, Plan Writer and MCWRA Grant Administrator. Over the course of two years an extended dialog within the SC and TAC, as well as outside these committees through public review, led to the formulation of the Plan. A portion of the watershed area included in this Plan was previously covered by the Upper Salinas River Watershed Action Plan (2004).

NOTE TO READER: Quoted material from authors and sources compiled in the Watershed Resources Inventory and presented in the Nacitone Watersheds Management Plan is credited to the source, italicized and indented.

C. Vision Statement and Guiding Principles of the Nacitone Steering Committee

The Vision Statement developed by the Steering Committee acknowledges the importance of all uses of these watersheds.

The Nacimiento/San Antonio River Watersheds Management Plan should protect water quality and watershed uses for all stakeholders.

The following are guiding principles important for effective protection of water quality and watershed uses for all stakeholders.

- Manage human watershed uses and natural watershed resources and functions to co-exist over the long-term.
- Foster trust and a stewardship ethic among all watershed users.
- Encourage and facilitate voluntary and incentive-based efforts rather than additional regulation to protect water quality and watershed uses and functions.
- Protect the quality and quantity of surface water and ground water
- Seek to balance the use of watershed resources in order to protect those uses including homes and communities, infrastructure, farming, ranching, recreation, military, and others.
- Facilitate greater understanding within our communities of how watersheds function and how individuals, entities, and groups with jurisdiction can protect both watershed uses and watershed health.

D. Balancing Watershed Uses Through Thoughtful Communications

The Watersheds Management Plan recognizes the potential for competition among diverse demands on the natural resources and functions of these watersheds. It is important to understand and acknowledge the challenge of finding an equitable and effective way to balance the uses of watershed resources while protecting the critical natural functions of these watersheds that make the resources available. Water, soil, forests, other plant life and animal communities should be respected for their intrinsic worth as well as carefully used and managed for a variety of human uses such as the creation of homes, communities with infrastructure, recreational enjoyment of the resources, farming and ranching, support of military needs, etc.

The Plan attempts to summarize what is known about these watersheds, their uses and resources. The plan also lays the groundwork for improved communication and coordination across these uses and among watershed residents, government agencies, pertinent jurisdictions, and other watershed users.

There are several recommendations in this Plan to form water quality and watershed use-based, problem-solving roundtables. These roundtables would provide an opportunity for agencies responsible for managing watershed resources or uses to communicate with watershed users including landowners and others to clarify and understand varying mandates, voice concerns, assess available time, talents, and funding. A critical function of these roundtables would be to facilitate cooperative agreements for coordinated management of these watershed uses and the dissemination of information to the public.

Specific recommendations from the Steering Committee and others engaged in this planning process may include the establishment or continuation of roundtables such as the following:

- **Fire Safe Councils**
- **Livestock Grazing Coordinating Committee**
- **Lake Recreation and Public Safety roundtable**
- **Cross-county Land Use Planning Task Force**
- **Water Quality Information Sharing roundtable**
- **Community Road Associations**

Descriptions of these roundtables and the tasks envisioned for them are in the following chapters.

E. Water Quality and Watershed Health by Identifying and Preventing Impacts

Unfortunately, water quality and watershed uses can be threatened when watershed uses are not well managed or when naturally occurring conditions exist that negatively impact water quality or watershed health. Examples of naturally occurring conditions include total dissolved solids (TDS) and selenium in the San Antonio River. Increase in population (watershed usage) and new watershed uses requires the ability to improve protection measures, including the creation of innovative management measures. The Steering Committee has assessed and compiled existing information on current water quality and explored potential negative impacts arising from current uses in the watersheds.

(This page intentionally left blank)

PART 2
Existing Conditions

The existing conditions section is a depiction of relevant descriptive data on the physical, natural and cultural resources of the Nacimiento and San Antonio River watersheds. This information is important to understand the context for water quality changes over time. To a large extent, the authors have relied on data and descriptions of resource conditions contained in prior reports. This information has been reviewed and incorporated into this section of the plan. The prior reports were not subjected to technical or peer review in preparing this plan.

In addition, the Steering Committee elected to have an independent analysis of water quality, water supply, erosion and sediment supply, and historic conditions of the channel and riparian corridor performed by an outside consultant, Swanson Hydrology and Geomorphology (SH+G). The product, Nacitone Watershed Resources Inventory Final Technical Memorandum—Water Resources, Water Quality and Sediment Supply, will be included with this report in Appendix D. Contents of the technical memorandum have been excerpted and integrated into the hydrology, water quality and reservoir features and management sections of Part 2.

It is anticipated that this information about existing conditions will serve as a baseline for future investigations in the watershed.

I. PHYSICAL FEATURES OF THE WATERSHED

A. Location, Overview and Topography

The Nacitone watersheds include the two adjacent watersheds trending southeast from the Santa Lucia Range to the Salinas River in San Luis Obispo and Monterey Counties (Figure 1). Comprised of the Nacimiento and San Antonio River watersheds, the term Nacitone originates from the Dust Bowl days when the US Soil Conservation Service formed the Nacitone Soil Conservation District.

Portions of the Nacimiento River and San Antonio River watersheds are located in San Luis Obispo and Monterey counties. Approximately 53% of the Nacimiento River watershed lies in San Luis Obispo County and almost 97% of the San Antonio River watershed lies in Monterey County. The headwaters of both the Nacimiento and San Antonio Rivers are located in the Los Padres National Forest. The San Antonio River watershed originates at an elevation of 3,060 feet above sea level and is characterized by a 'V-shaped' valley. The San Antonio River Valley consists of a series of northwest-southeast trending drainages with scattered brush, oak trees and relatively steep sides. In the eastern part of the watershed, Jolon Valley merges with Lockwood Valley and forms an area characterized by a large, relatively flat, southeasterly sloping surface (Geotechnical Consultants, Inc, 1984). The Nacimiento River watershed originates at an elevation of approximately 3,350 feet above sea level and its valley is also characterized by a 'V-shaped' valley.

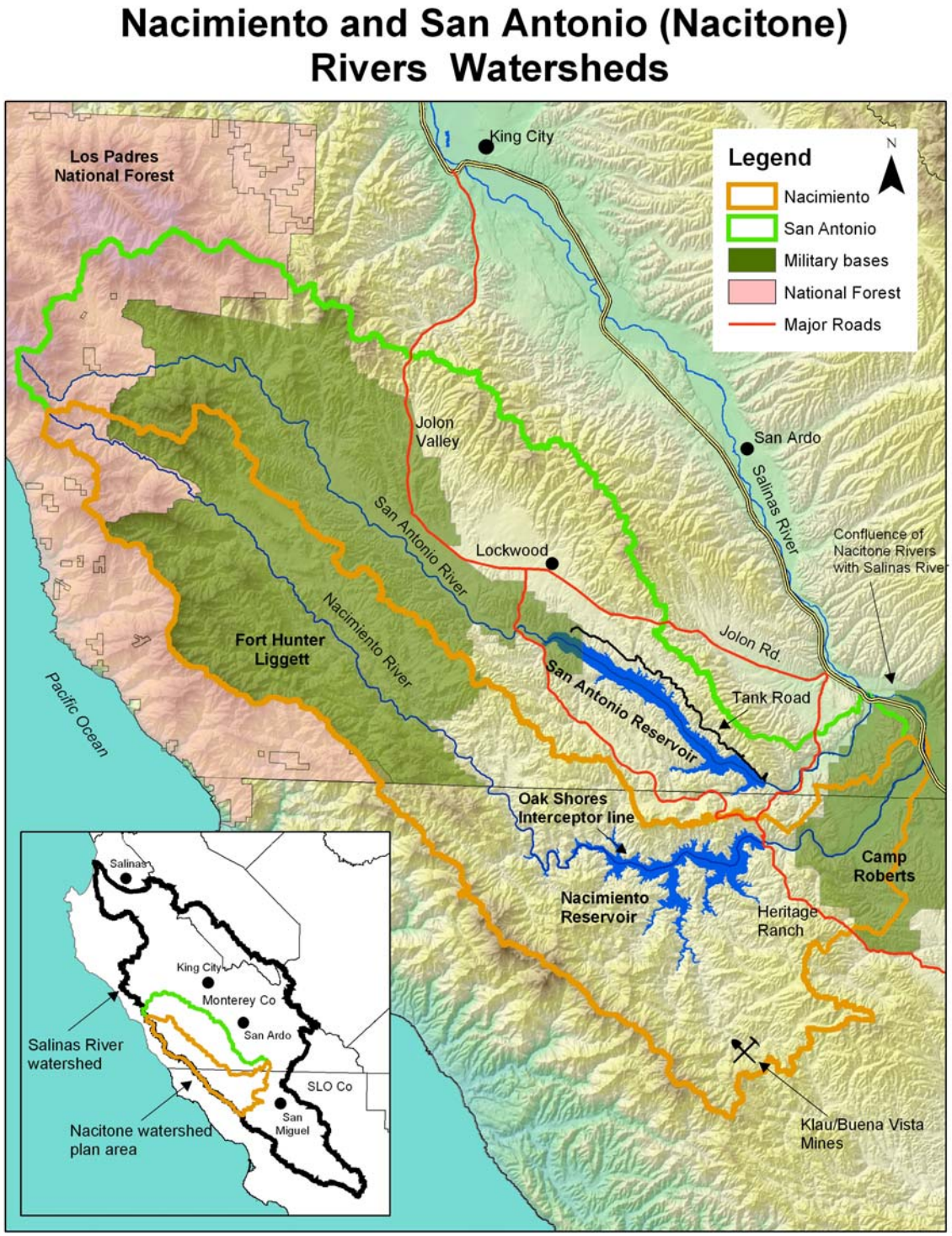

Figure 1. Nacimiento and San Antonio River Watersheds

Watersheds Description

The Nacimiento and San Antonio River watersheds cover 705.3 square miles from the ridges within the Santa Lucia Range to each river's confluences with the Salinas River. The Monterey County Water Resources Agency has estimated the San Antonio River watershed to contain

343.8 square miles or 220,003 acres and the Nacimiento River watershed is 361.5 square miles or 231,373 acres (Ken Ekelund, 2007). Both watersheds are impounded creating reservoirs. The San Antonio River is impounded at river mile 5 and the Nacimiento River is impounded at river mile 10. The reservoirs are operated by the Monterey County Water Resources Agency and both are managed as a unit for the control of seawater intrusion, groundwater recharge and groundwater quality enhancement for the Salinas Valley, recreational opportunities for the adjoining and regional communities, flood control, drought protection, and preservation of aquifer storage (RMC, 2003). Nacimiento Reservoir began operating in 1957 and San Antonio Reservoir in 1965 (Montgomery Watson, 1997). The drainage area controlled by the two dams is approximately 650 square miles .

Although adjacent watersheds, Nacimiento and San Antonio are very different geologically and metereologically, which affects how each functions hydrologically. These differences have led to the framework upon which the reservoirs are managed. Management, in turn greatly influences existing watershed conditions. The Nacimiento River watershed, although only slightly larger, receives much higher rainfall than the San Antonio River watershed, and experiences more runoff due to its higher rainfall and geologic features. Because of these features, Nacimiento Reservoir fills more quickly. The San Antonio watershed generates less runoff due to both lower rainfall and the storage of rainwater as groundwater in an alluvial basin situated upstream of the San Antonio Reservoir. A steering committee discussion occurred regarding safe yield of the watersheds above their respective dams. Safe yield is a term used to express the amount of water an aquifer or well can yield for consumption without producing unacceptable negative effects. Safe yield information is not available for these watersheds.

Watershed Features

San Antonio River Watershed

The San Antonio River has its headwaters in the Santa Lucia Mountains between Cone and Junipero Serra peaks, in the Ventana Wilderness of Los Padres National Forest. The stream flows in a southeasterly and easterly direction through the Los Padres National Forest and Fort Hunter Liggett Military Base (FHL) to its confluence with the Salinas River. The river is 58.2 miles in length, of which the first 8.6 miles of the south fork and 6.7 miles of the north fork are located within the Los Padres National Forest. With the exception of the upper section including the headwaters, the drainages are normally dry during late summer and fall months, with the exception of Mission Creek, which historically has exhibited surface flow year-round. Spring-fed water flows through the upper portion of the San Antonio River throughout the year, while lower reaches have intermittent flow. San Antonio waterways include Carrizo Creek, Santa Lucia Creek, lower Rattlesnake Creek, Mission Creek, and Sulphur Spring (Las Tablas Creek and Lake Nacimiento TMDL, 2003)(Figure 2).

Nacimiento River Watershed

The Nacimiento River, located about five miles southwest of the San Antonio River, originates in the Santa Lucia Mountains south of Cone Peak, also within the Ventana Wilderness of Los Padres National Forest. The stream also flows southeasterly through the Los Padres National Forest, FHL and Camp Roberts and a few private parcels as well as the Nacimiento reservoir before it reaches its confluence with the Salinas River. The river is 54.2 miles in length of which 9.5 miles are located within the Los Padres National Forest. With the exception of the upper section including the headwaters, much of the Nacimiento River surface remains dry during

the summer. However, year round water can be found in various pools along portions of the river (FHL Special Resource Study, 2006).

Nacimiento River drainages can be divided into two groups: the lower basins that drain directly to the reservoir, and the upper basins that drain to the Nacimiento River, which then flows into the reservoir. The lower basins include Las Tablas, Franklin, Town, Dip, Snake, and Kavanaugh creeks. The upper basins include Little Burnett, Tabacco, Salmon, Las Berros, San Miguel, Stony, El Piojo, Waller, and Sapaque Creeks. The crest of the Santa Lucia Range forms the southwestern boundary of the Nacimiento River watershed, and the San Antonio River watershed divide bounds it on the northeast (Clean Lakes Assistance Program for Lake Nacimiento, 1994). Additional main stem creeks include: Carrals Spring, Slickrock Creek, Stony Creek, San Miguel Creek, Upper Los Berros Creek, N. Fork Los Burros Creek, San Miguelitos Ranch, Gabilan Creek, Los Bueyes Creek, Lower Los Burros Creek, Oak Flat, Waller Creek, Mesa Coyote, Pozo Honda Creek, Turtle Creek and Gulch House Creek (Las Tablas Creek and Lake Nacimiento TMDL, 2003)(Figure 2).

Figure 2. Nacimiento and San Antonio River Subwatersheds

B. Geology

The significance of geology to an understanding of watershed health relates to the physical changes that occur based on the underlying rock structures, their constituent elements and their juxtaposition within the watershed. Geologic information was derived from previously published sources collected for the WRI. Figure 3 was produced by SH+G for this project.

San Antonio River Watershed

The San Antonio River Watershed lies within Salinian Block of the Pacific plate. The Lockwood basin occupies a valley in southwestern Monterey County between the Santa Lucia range to the west and the Lockwood-San Ardo hills to the east. The Los Ojitos Hills form the southern boundary.

Marine sediments of Miocene age are assigned to the Vaqueros, Monterey and Santa Margarita formations. Overlying a granitic basement, they are as thick as 825 feet in the west and thin to the east. The Monterey Formation progressively truncates the Vaqueros in an easterly direction.

The youngest sandstone of the Miocene sequence is referred to as the Santa Margarita Formation. Of these units, only the Monterey Formation crops out in the Lockwood area. It forms the bulk of the Lockwood-San Ardo hills and is extensively exposed in the hills southwest of the San Antonio River (Logan, 1987).

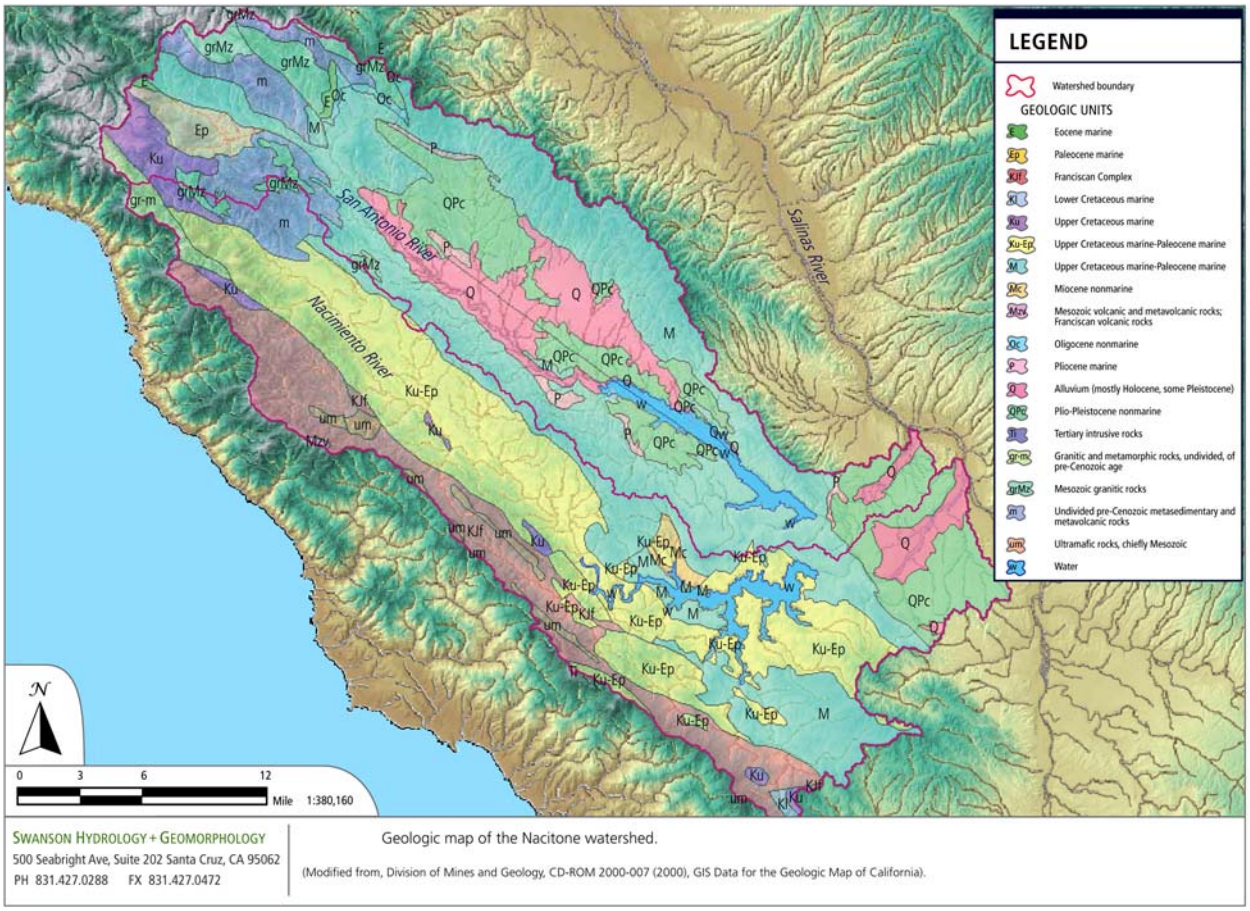

SWANSON HYDROLOGY + GEOMORPHOLOGY
500 Seabright Ave, Suite 202 Santa Cruz, CA 95062
PH 831.427.0288 FX 831.427.0472

Geologic map of the Nacitone watershed.

(Modified from, Division of Mines and Geology, CD-ROM 2000-007 (2000), GIS Data for the Geologic Map of California).

Figure 3. Geologic map of Nacitone watersheds

Nacimiento River Watershed

The Nacimiento River watershed lies within Salinian Block of the Pacific plate. The Salinian Block, which is bounded on the east by the San Andreas Fault Zone and is underlain at depth by a basement of extensively folded and faulted Franciscan rocks of Jurassic age. Sedimentary rocks of Cretaceous to Late Tertiary age are commonly exposed at the surface in this province and are extensively folded and faulted. Pleistocene and recent sediments are offset along the San Andreas Fault (NWP EIR, 2003).

Paso Robles Formation – The nonmarine, Plio-Pleistocene-age Paso Robles Formation consists of massive to locally cross-bedded, poorly exposed, weakly consolidated mixtures of gravel, sand, silt, and clay.

Santa Margarita Formation – The Miocene-age, Santa Margarita Formation predominantly consists of poorly stratified, sandy, marine sediments that conformably overlie the Monterey Formation and are locally unconformably overlain by the Paso Robles Formation. The arkosic sandstone of this formation is typically massive to coarsely crossbedded and locally contains abundant shell beds and reefs. The thickness of the Santa Margarita Formation ranges from approximately 200 feet west of Atascadero to a maximum of 2,000 feet northeast of Santa Margarita.

Monterey Formation – The Miocene-age Monterey Formation consists of well-bedded, marine, siliceous and calcareous shale. That shale includes interbeds of chert along with diatomaceous, porcelaneous, tuffaceous, and dolomitic units. Local interbeds of sandstone are also present within an upper member of that formation, where distinguishable. The shale ranges in thickness from approximately 200 feet to more than 2,000 feet.

Tierra Redonda Formation – The Miocene-age Tierra Redonda Formation consists of nonfossiliferous, thickly bedded to massive sandstone located southwest of the Jolon fault. That formation locally is composed of granitic boulder conglomerate with clasts ranging in size from 1 to 8 feet in greatest dimension. The Tierra Redonda Formation conformably overlies the Vaqueros Formation and intertongues with the Sandhodt Member of the Monterey Formation. The Tierra Redonda Formation has a thickness of approximately 1,650 feet in the type area.

Unnamed Tertiary/Cretaceous Unit – This unit is located west of Paso Robles, specifically southwest of the Jolon fault, and consists predominantly of sandstone and conglomerate with locally abundant mudstone. The thickness of this unit is unknown because the base of the unit is obscured; however, the unit is at least 2,500 feet thick.

Franciscan Formation – The Franciscan Formation consists of a mélange of sandstone, mudstone, and greenstone, with lesser amounts of chert, serpentinite, diabase gabbro, and blueschist facies metamorphic rocks. Those materials are thinly bedded to massive, locally highly fractured and discontinuous, and poorly to well indurated. Serpentinite-rich zones withinmthe Franciscan Formation may locally contain a magnesium-silicate mineral called chrysotile. Chrysotile typically occurs in veins of silky fibers and is an important source of commercial asbestos (NWP EIR, 2006).

Information on soil and vegetation types is briefly discussed in Appendix C (Agency Grazing Land Management Plan). Appendix C includes soil and vegetation information for Agency Grazing leases around both reservoir. More detailed information for other location in these watersheds can be obtained from the Natural Resources Conservation Service in either Monterey or San Luis Obispo counties.

II. DESCRIPTION OF CURRENT CONDITIONS OF THE WATERSHED

The current conditions section is a depiction of relevant descriptive data on the natural and cultural resources of the Nacimiento and San Antonio River watersheds. Status and reference information from the Watershed Strategy section of the plan may be in part repeated here and expanded in more detail.

A. HYDROLOGY

Hydrology is defined as the study of water and its properties, including its distribution and movement in and through the land areas of the earth. Understanding the hydrology of these watersheds is important to understanding water quality and quantity changes over time.

Surface Water

The Nacimiento and San Antonio Rivers together contribute more than 75 percent of the flow of the Salinas River at Monterey Bay (Clean Lakes Assistance Report, 1994), specified in acre-feet that is approximately 200,000 acre-feet per year (AFY) and 70,000 AFY to the Salinas River, respectively. In order to maintain minimum flow requirements in the river channels below the Nacimiento and San Antonio dams, a 25 cubic feet per second and 3 cubic feet per second flow requirement at the site of the dams, respectively, is required (SVWP EIR, April 2002).

The average annual inflow to Nacimiento Reservoir is about three times that of San Antonio Reservoir, on average. The MCWRA has operated the reservoirs so that releases from the two reservoirs also maintain an approximate 3:1 ratio in stored water between the reservoirs. Pursuant to the Nacimiento Dam Operation Policy (MCWRA, 2000), whenever possible, a release schedule is to be adopted that results in an empty space being created in the Nacimiento Water Conservation Pool that is three times that of the San Antonio Water Conservation Pool empty space on November 1st of each year.

SH+G prepared a water budget to analyze the available surface water supply. A water budget reflects the relationship between input and output of water through a region The water budget for the Nacitone watersheds takes into account all aspects of the hydrologic cycle as well as the operational aspects of the Nacimiento and San Antonio Reservoirs (discussed below in Reservoir Features and Management). Graphic representation of the water budgets is provided in (Figures 4, 5 & 6). This information can be used by stakeholders as they work together to protect beneficial uses of the watershed as well as in meeting the MCWRA interests of groundwater recharge targets for the Salinas Valley.

Lake Nacimiento Watershed

	Before Reservoir [volumes in af]		→	Reservoir [volumes in af]					
Water Year	Precipitation	ET + Groundwater Recharge	Runoff[1] → Reservoir	Oct. 1 Reservoir Capacity	Direct Precipitation	Evaporation	Dam Relase	Direct Use + Percolation[2]	Net Change in Storage
1959	267,134	152,903	114,231	250470	4,400	16,623	231,874	30,170	-160,035
1960	302,935	212,466	95,400	90435	5,071	8,730	155,232	16,089	-79,580
1961	289,241	242,437	51,513	10855	4,842	4,777	35,764	10,713	5,100
1962	575,476	244,329	340,515	15955	9,633	13,492	159,981	80,739	95,935
1963	578,816	276,048	312,190	111890	9,689	16,368	135,769	54,992	114,750
1964	338,673	271,974	72,212	226640	5,669	13,846	214,326	11,498	-161,790
1965	419,500	193,353	232,976	64850	7,022	13,717	144,220	39,736	42,325
1966	398,792	223,821	181,463	107175	6,675	14,526	171,493	-17,426	19,545
1967	819,962	290,323	542,987	126720	13,725	17,168	280,600	155,120	103,825
1968	265,527	229,075	40,775	230545	4,445	14,376	189,614	13,834	-172,605
1969	1,052,089	324,223	744,993	57940	17,611	11,722	622,366	131,055	-2,540
1970	299,595	87,526	216,946	55400	5,015	10,907	134,225	58,048	18,780
1971	364,056	186,964	183,019	74180	6,094	12,428	149,911	43,014	-16,240
1972	255,507	189,622	70,044	57940	4,277	7,280	83,187	8,719	-24,865
1973	762,514	272,049	502,878	33075	12,764	16,853	168,934	128,251	201,603
1974	575,142	223,833	360,671	234678	9,627	19,886	255,201	82,364	12,847
1975	375,412	18,875	362,648	247525	6,284	19,849	238,149	117,414	-6,480
1976	309,281	302,143	12,173	241045	5,177	15,795	179,080	-629	-176,895
1977	252,167	248,166	8,106	64150	4,221	6,492	44,055	2,620	-40,840
1978	850,021	93,231	770,628	23310	14,228	18,135	306,803	231,838	228,080
1979	470,601	295,526	182,736	251390	7,877	20,666	184,665	-20,966	6,248
1980	658,975	220,205	449,498	257638	11,030	18,096	360,145	96,211	-13,923
1981	372,072	276,734	101,395	243715	6,228	19,245	167,667	11,061	-90,350
1982	528,049	198,709	337,935	153365	8,839	18,379	138,881	51,420	138,095
1983	876,073	10,545	879,790	291460	14,664	17,653	733,710	200,526	-57,435
1984	285,233	156,425	133,451	234025	4,774	17,342	215,895	6,194	-101,205
1985	310,283	209,138	106,196	132820	5,194	12,964	165,620	17,286	-84,480
1986	571,134	165,391	415,040	48340	9,560	17,596	142,360	62,285	202,360
1987	246,155	201,725	48,438	250700	4,120	17,861	133,575	-1,542	-97,335
1988	461,249	417,072	51,686	153365	7,721	12,808	161,173	1,231	-115,805
1989	311,953	270,994	46,037	37560	5,222	4,639	68,267	4,563	-26,210
1990	241,146	224,030	21,042	11350	4,036	4,479	5,538	1,161	13,900
1991	464,255	324,522	147,291	25250	7,771	9,929	87,886	31,559	25,688
1992	479,285	346,858	140,230	50938	8,023	10,054	116,420	14,222	7,557
1993	837,663	372,993	478,306	58495	14,021	16,761	267,227	104,270	104,069
1994	382,426	324,115	64,537	162564	6,401	11,812	158,767	17,108	-116,749
1995	997,314	527,899	485,650	45815	16,694	18,209	190,776	51,919	241,440
1996	459,579	217,104	249,956	287255	7,693	20,950	321,352	-2,484	-82,169
1997	586,164	216,394	379,312	205086	9,812	17,693	462,615	-35,348	-55,836
1998	894,109	271,346	637,318	149250	14,966	18,218	379,448	101,215	153,403
1999	312,955	197,166	120,883	302653	5,238	19,361	151,339	26,441	-71,020
2000	441,209	187,985	260,406	231633	7,385	18,976	206,291	56,257	-13,733
2001	515,357	358,521	165,225	217900	8,626	19,047	142,558	26,625	-14,378
2002	277,885	196,407	86,002	203522	4,651	15,881	155,732	15,387	-96,347
2003	459,579	263,424	203,637	107175	7,693	15,659	127,785	31,025	36,860
2004	317,631	224,796	98,005	144035	5,317	14,510	112,076	16,196	-39,460
2005	938,530	456,155	497,653	104575	15,710	19,677	229,170	94,751	169,765
2006	519,365	205,700	322,119	274340	8,694	23,731	214,143	88,107	4,830

[1]Runoff was estimated using daily USGS gage data which may underestimate large flows.

[2]Direct use, percolation and other losses were back-calculated using runoff data and other known parameters, which may explain the occurence of negative values.

SWANSON HYDROLOGY + GEOMORPHOLOGY
500 Seabright Ave, Suite 202 Santa Cruz, CA 95062
PH 831.427.0288 FX 831.427.0472

Water budget for the Lake Nacimiento watershed and reservoirs.

Figure 4. Water Budget Table for Lake Nacimiento Watershed (post dam construction)

San Antonio Watershed

	Before Reservoir [volumes in af]		→	Reservoir [volumes in af]					
Water Year	Precipitation	ET + Groundwater Recharge	Runoff[1] → Reservoir	Oct. 1 Reservoir Capacity	Direct Precipitation	Evaporation	Dam Relase	Direct Use + Percolation[2]	Net Change in Storage
1967	807,493	617,941	189,552	20475	11,352	10,711	2,102	69,136	110,495
1968	261,490	245,541	15,949	130970	3,676	13,834	7,176	-2,346	-1,425
1969	1,036,091	737,808	298,282	129545	14,566	20,891	31,698	77,091	177,580
1970	295,039	216,589	78,450	307125	4,148	23,026	76,467	47,437	-64,645
1971	358,520	311,321	47,199	242480	5,040	19,300	15,523	19,303	-2,625
1972	251,622	240,523	11,099	239855	3,538	16,972	142,217	-1,875	-144,025
1973	750,919	579,579	171,340	95830	10,557	14,457	10,580	56,670	94,995
1974	566,396	412,406	153,990	190825	7,963	19,254	4,104	75,168	61,625
1975	369,704	246,102	123,602	252450	5,198	21,140	23,478	49,323	35,205
1976	304,578	300,203	4,375	287655	4,282	19,721	45,717	-3,778	-54,217
1977	248,333	248,327	5	233438	3,491	13,250	188,733	-16,655	-183,288
1978	837,096	508,963	328,132	50150	11,769	15,626	34,360	107,057	176,780
1979	463,445	383,594	79,851	226930	6,516	19,162	18,902	31,220	16,430
1980	648,955	442,916	206,039	243360	9,124	20,474	73,043	75,445	45,558
1981	366,414	322,017	44,398	288918	5,151	21,059	38,696	9,606	-20,498
1982	520,019	384,132	135,887	268420	7,311	19,252	65,300	49,471	8,160
1983	862,751	372,546	490,205	276580	12,129	18,969	116,340	361,369	7,105
1984	280,896	213,653	67,243	283685	3,949	20,383	85,769	24,389	-60,855
1985	305,565	276,254	29,311	222830	4,296	17,054	20,319	18,479	-23,480
1986	562,449	272,896	289,554	199350	7,907	18,435	62,418	148,328	67,410
1987	242,412	215,257	27,156	266760	3,408	18,216	74,245	-4,206	-57,695
1988	454,235	433,222	21,013	209065	6,386	15,954	49,716	10,374	-51,002
1989	307,209	292,661	14,548	158063	4,319	10,255	145,269	-992	-138,243
1990	237,479	232,791	4,688	19820	3,339	3,227	2,154	1,270	-1,397
1991	457,196	410,212	46,984	18423	6,428	4,403	21,731	16,205	5,527
1992	471,997	425,336	46,661	23950	6,636	4,997	16,794	13,654	12,457
1993	824,926	620,611	204,315	36407	11,598	11,247	15,677	75,934	105,043
1994	376,611	361,309	15,302	141450	5,295	10,704	83,468	2,109	-78,130
1995	982,148	725,354	256,794	63320	13,808	11,959	25,859	84,472	139,250
1996	452,591	325,433	127,158	202570	6,363	17,499	35,887	52,780	26,020
1997	577,251	357,418	219,832	228590	8,116	16,780	71,207	159,046	-22,030
1998	880,513	571,885	308,627	206560	12,379	16,914	25,020	193,130	83,115
1999	308,196	267,247	40,949	289675	4,333	18,651	29,802	17,214	-21,015
2000	434,500	327,494	107,007	268660	6,109	20,612	29,276	46,975	15,025
2001	507,520	444,049	63,471	283685	7,135	19,377	24,016	24,153	2,228
2002	273,660	231,202	42,458	285913	3,847	18,309	89,155	24,933	-86,563
2003	452,591	381,253	71,338	199350	6,363	15,641	28,427	13,351	18,600
2004	312,801	273,468	39,333	217950	4,398	13,713	NO DATA	111,278	-82,782
2005	924,259	701,625	222,634	135168	12,994	17,056	NO DATA	93,936	118,182
2006	511,467	349,826	161,641	253350	7,191	24,574	17,296	69,602	56,950

[1]Runoff was estimated using daily USGS gage data which may underestimate large flows.

[2]Direct use, percolation and other losses were back-calculated using runoff data and other known parameters, which may explain the negative values.

SWANSON HYDROLOGY + GEOMORPHOLOGY
500 Seabright Ave, Suite 202 Santa Cruz, CA 95062
PH 831.427.0288 FX 831.427.0472

Water budget for the Lake San Antonio watershed and reservoirs.

Figure 5. Water Budget Table for Lake San Antonio Watershed (post dam construction)

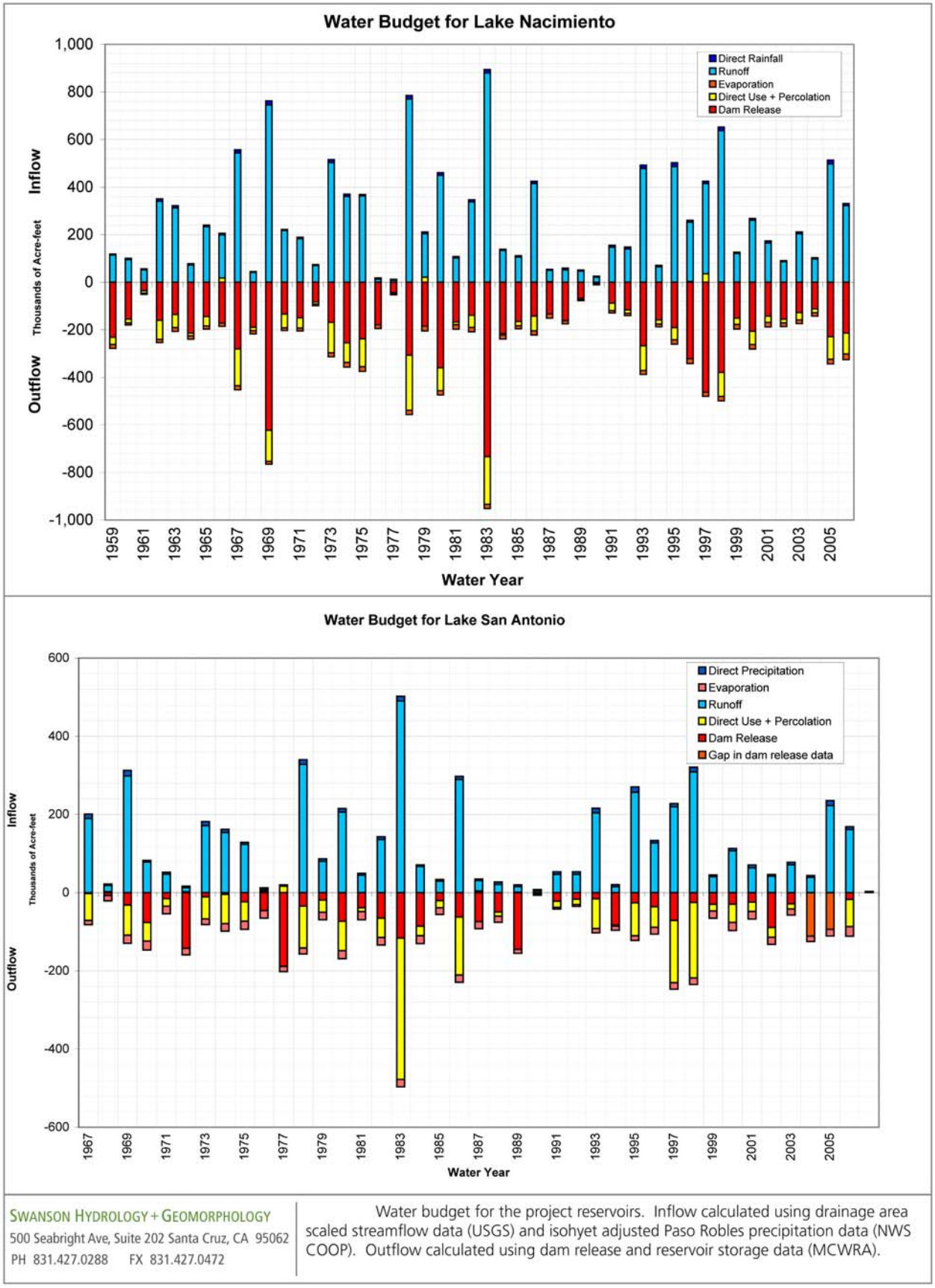

Figure 6. Graphic Water Budget for Lakes Nacimiento and San Antonio

Groundwater

The groundwater basins underlying the Nacitone watersheds include parts of the Paso Robles and Lockwood Groundwater Basins (Figure 7). The groundwater basins do not neatly underlie the watersheds' surface waters but instead conform to geologic features of the landscape. Examining these groundwater basins permits an understanding of the Nacitone water budget of the watersheds for consideration of overall water availability over time.

While it is the main groundwater basin within the Nacitone area, the Lockwood Valley Groundwater Basin is the least studied of the two primary groundwater basins that occur within the Nacitone Watersheds study area. The other two are parts of the Paso Robles Groundwater Basin and the Salinas Groundwater Basin. The Paso Robles Basin has been studied extensively by Fugro as part of a two-phase analysis of the basin (Fugro West, 2002; Fugro West et al, 2005). Similarly, extensive analysis of the Salinas Groundwater Basin, which historically experienced overdraft conditions and seawater intrusion, resulted in development of Nacimiento and San Antonio Reservoirs to provide winter storage of rains that are released during the dry season to recharge Salinas basin aquifers and limit seawater intrusion into the lower Salinas Valley near Salinas.

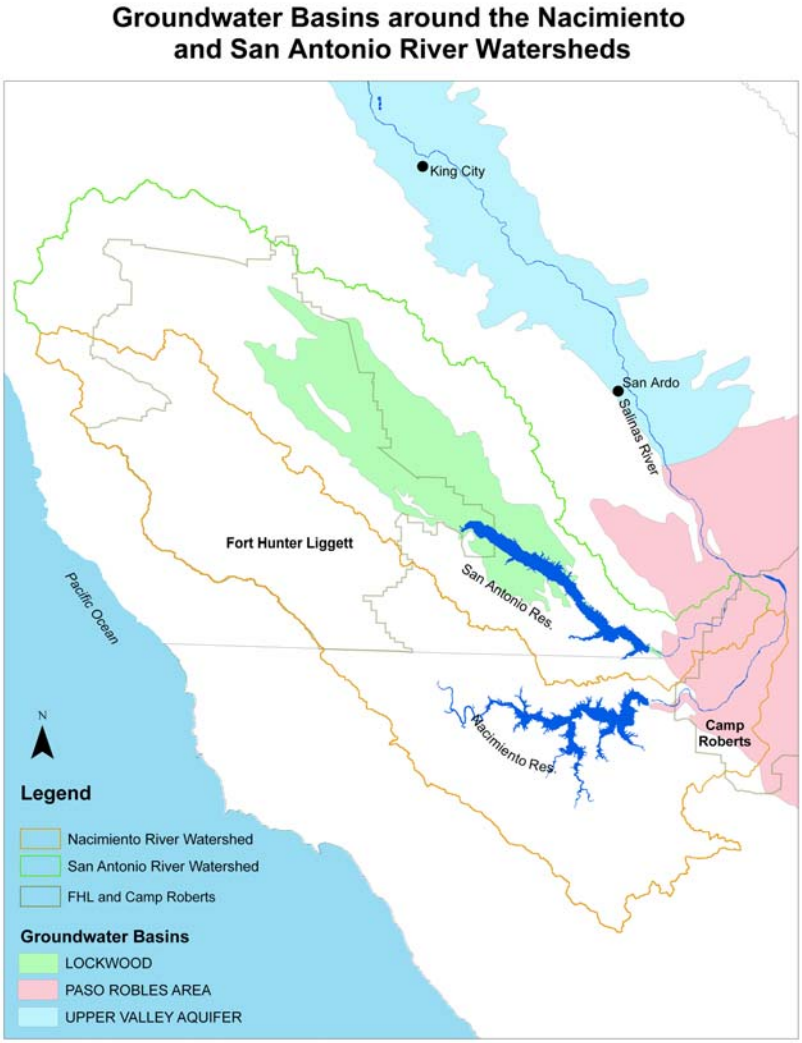

Figure 7. Groundwater Basin Map
Source: DWR GIS layer B118vNAD27UTM10

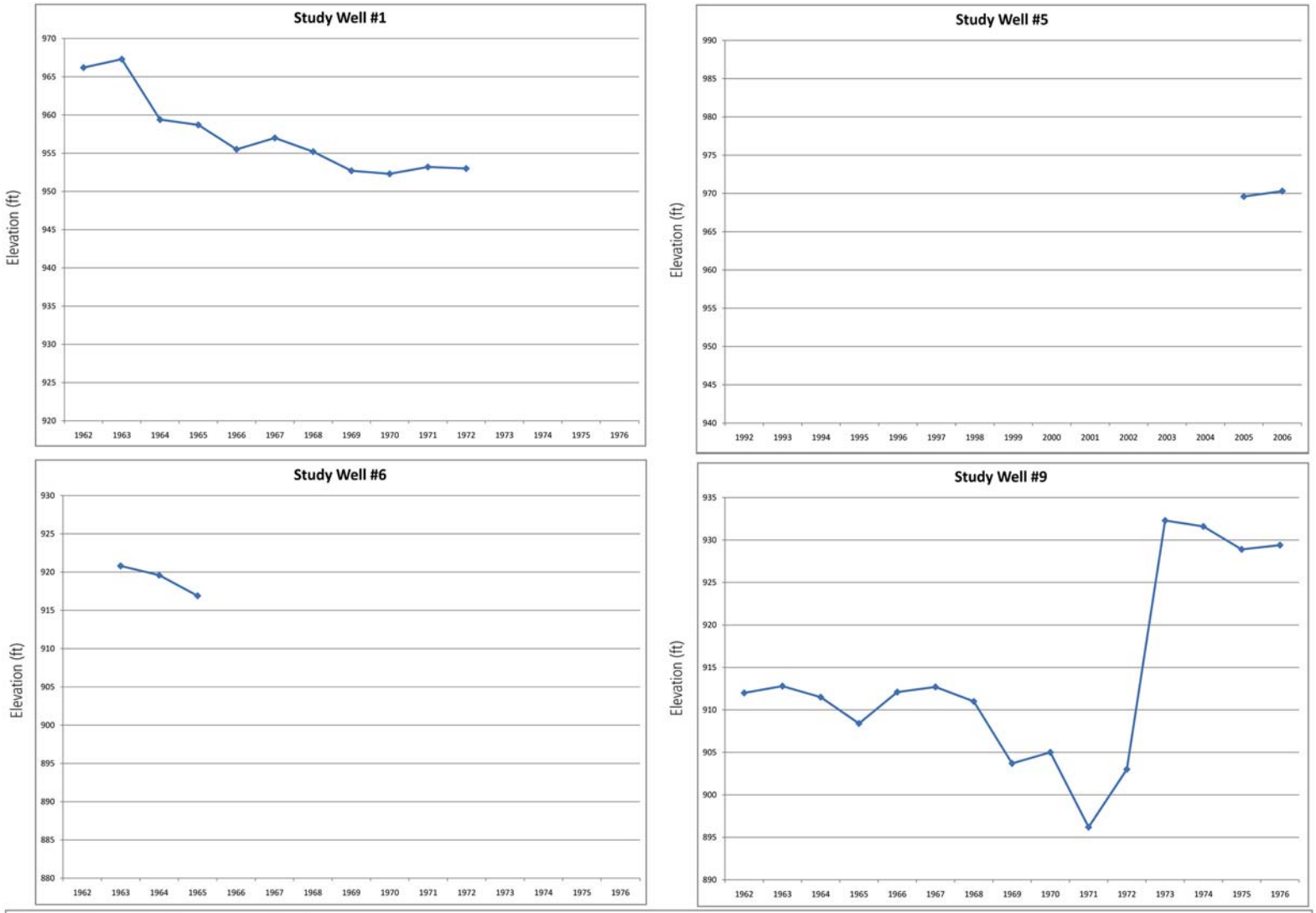

SWANSON HYDROLOGY + GEOMORPHOLOGY
500 Seabright Ave, Suite 202 Santa Cruz, CA 95062
PH 831.427.0288 FX 831.427.0472

Study wells formerly monitored by Monterey County Water Resources Agency within the Lockwood Groundwater Basin. Most of these wells span a period from the early 1960's to the late 1970's, representing a general period of aquifer overdraft within the basin.

Figure 8a. Study Wells in the Lockwood Groundwater Basin, 1960-1979

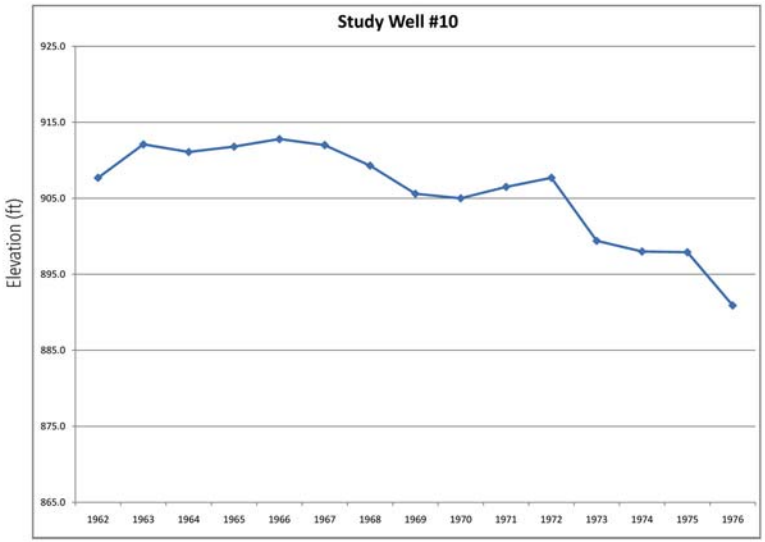

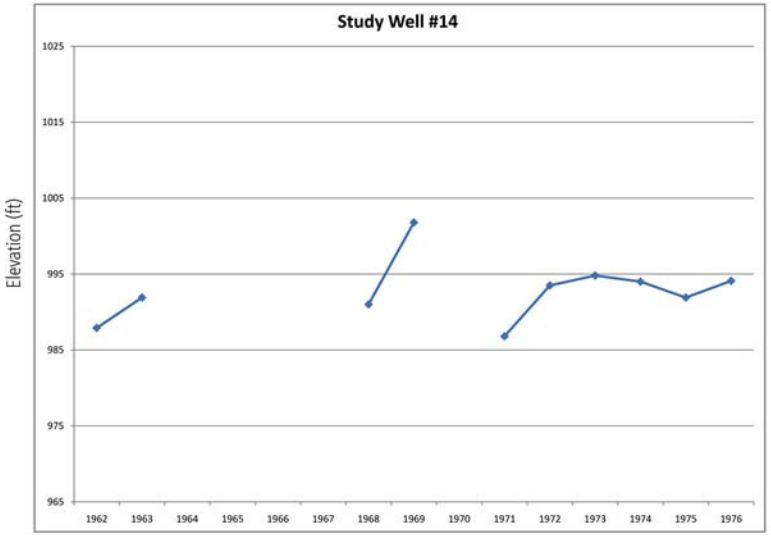

SWANSON HYDROLOGY + GEOMORPHOLOGY
500 Seabright Ave, Suite 202 Santa Cruz, CA 95062
PH 831.427.0288 FX 831.427.0472

Figure 8b. Study Wells in the Lockwood Groundwater Basin, 1960-1979

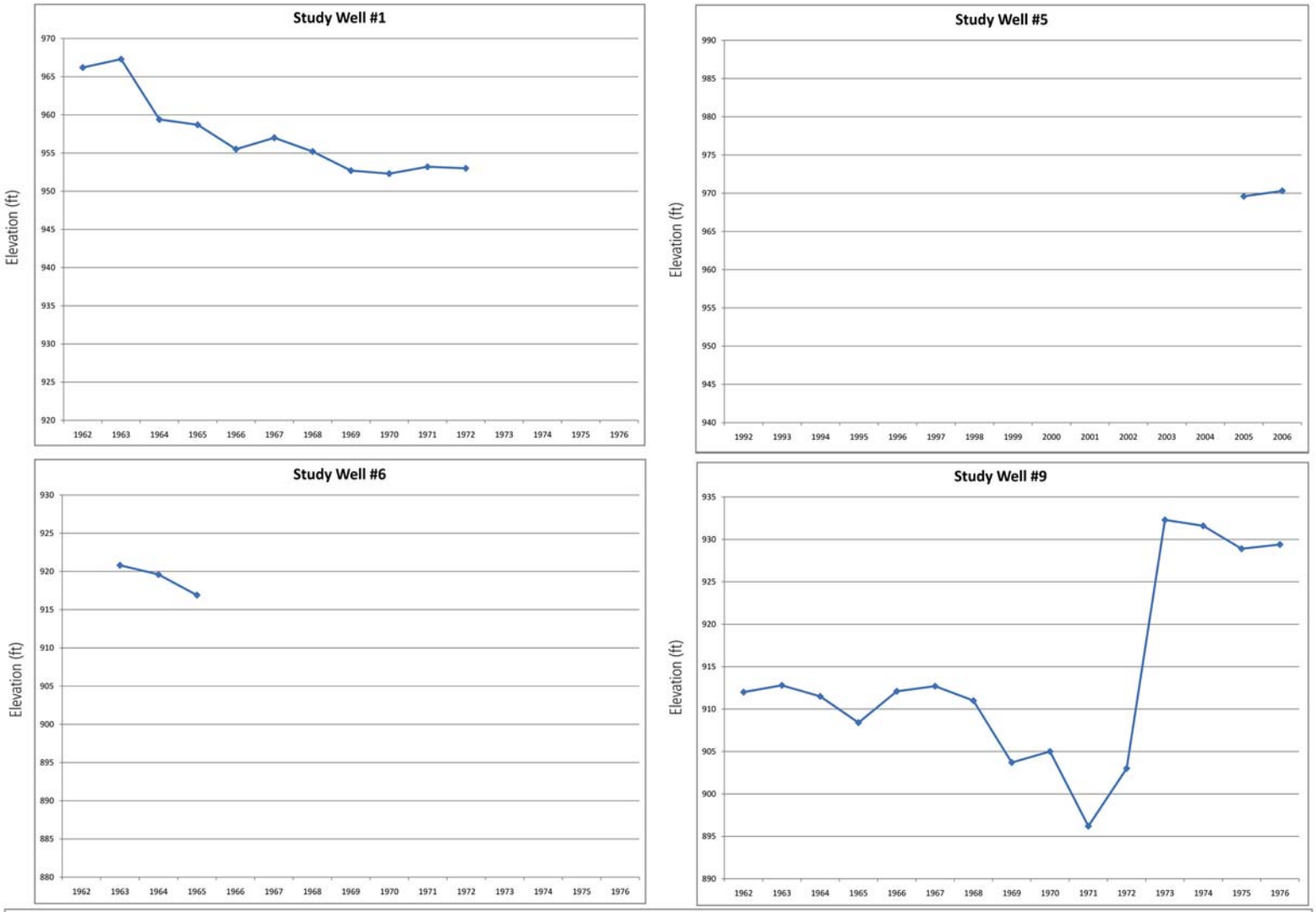

SWANSON HYDROLOGY + GEOMORPHOLOGY
500 Seabright Ave, Suite 202 Santa Cruz, CA 95062
PH 831.427.0288 FX 831.427.0472

Study wells formerly monitored by Monterey County Water Resources Agency within the Lockwood Groundwater Basin. Most of these wells span a period from the early 1960's to the late 1970's, representing a general period of aquifer overdraft within the basin.

Figure 9a. Study Wells in Lockwood Groundwater Basin, 1960-present

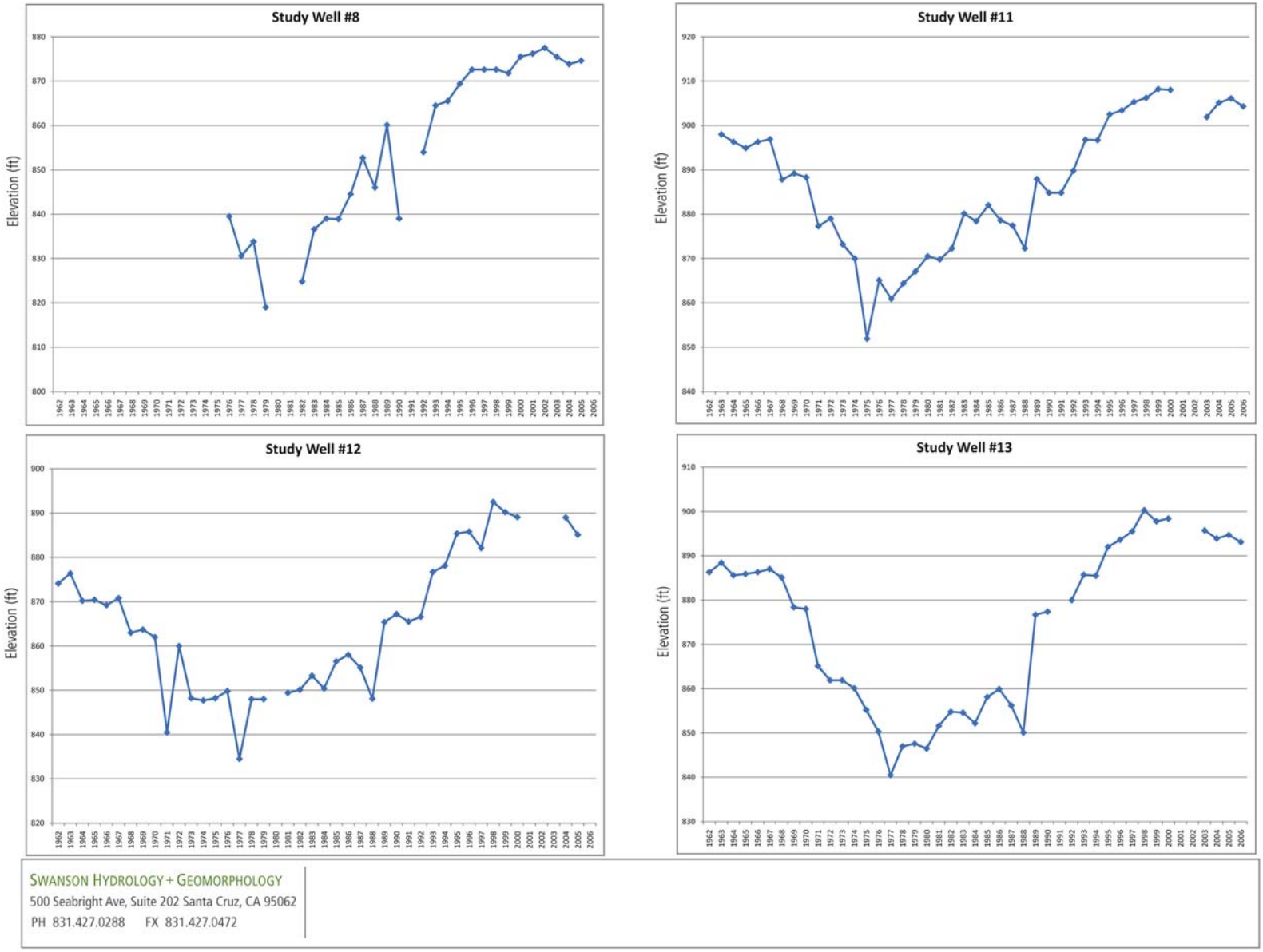

Figure 9b. Study Wells in Lockwood Groundwater Basin, 1960-present

B. Vegetation and Habitat

Descriptions of the Nacitone watersheds' habitats and vegetation are provided as gleaned from WRI information (For more detailed information, please refer to WRI Analysis posted at www.nacitonewater.org.) As the basis for much of watershed function, vegetation and habitats includes special status species and habitats within the watersheds that possess characteristics considered special by various jurisdictions.

Headwaters

Los Padres National Forest and the Ventana and Silver Peak Wilderness

The upper watersheds of the Nacimiento and San Antonio Rivers consist of remote undeveloped wildland with deep canyons and mountain peaks approaching 6000 ft which are part of the geologically complex Santa Lucia Mountains. Marked vegetation changes partition the watersheds into well-defined ecosystems. Much is chaparral with grass meadows, oak woodlands, pine forests and stunning rock formations creating a mosaic across the rugged landscape.

The Cone Peak Gradient Research Natural Area is located near the source of the Nacimiento River and is an area unusual for its ecological diversity and presence of the rare Santa Lucia Fir. The Valley Oak Research Natural Area is located on the North Fork of the San Antonio River and has one of the few remaining examples of valley oak woodland on public lands in California. Other vegetation types within the area include blue oak woodlands, California annual grasslands, chamise chaparral, coastal sage scrub, and riparian vegetation along the San Antonio River (USDA-Land Management Plan Part 2 Los Padres National Forest Strategy, Sept. 2005).

A review of the WRI documents revealed that the ecologically diverse landscape of the watersheds supports a variety of threatened and endangered species including the Arroyo Toad, Western Pond Turtle, Red-legged frog and the California Condor. The area also supports populations of mountain lion, bobcat, fox and deer.

Figure 10. River Upstream of Nacimiento Reservoir (Source: USLT RCD)

Redonda Mountain Sensitive Resource Area

Tierra Redonda Mountain is a major landmark in the planning area, and this broad table-top mountain encompasses approximately 1,300 acres with 320 acres under Bureau of Land Management (BLM) ownership. The mountain is of outstanding ecological importance and has been given a high priority for preservation by the State Department of Parks and Recreation. Most of the public lands are generally designated for open space use only. The San Luis Obispo County Land Use Ordinance indicates that emphasis should be placed on maintenance of the entire mountain as an undisturbed ecosystem rather than several small isolated preserve areas. Uses should be carefully regulated because of fire hazard problems and potential damage to fragile ecosystems (Oak Shores EIR, 2007).

Fort Hunter Liggett

The number of rare and sensitive plant species on FHL is among the highest for similar sized areas in California. This diversity of species can be attributed to the well-preserved landscape and unique geologic resources that underlie FHL. FHL encompasses extensive oak woodland and savanna communities, including valley oak, blue oak, coast live oak and native grassland under story vegetation. It offers the widest diversity of oak taxa of any area of its size in California. Oak woodlands and savanna on FHL include the largest known contiguous valley bottom stands of valley oak. The native oak savanna provides important habitat for many rare, threatened, and endangered species, including purple amole, Tule elk and San Joaquin kit fox. FHL has the highest concentration of oak savanna-specializing birds of any location in the nation.

Chaparral, vernal pools and riparian areas are additional rare habitat types on FHL that support nationally significant species. (FHL Special Resource Study, NPS, 2006).

Valley oak woodlands, valley needlegrass grasslands, and sycamore alluvial woodlands occur on FHL and are considered special status communities by CDFG. Special status communities are defined as biological communities that are rare or restricted in occurrence, provide important habitat for wildlife and unusual plant assemblages, or are jurisdictional waters or wetlands of the United States. Additional valuable communities on FHL include wetlands, riparian communities, oak woodlands and savannas, native bunch grass (especially valley needlegrass) grasslands, and rock outcrops. Section 7.6 through 7.12 of the FHL Integrated Natural Resources Management Plan (INRMP) includes Plant communities, threatened, endangered and other sensitive species, game species, fisheries, non-game species, migratory birds and exotic/invasive plants and wildlife.

Plant Community	San Antonio Watershed			Nacimiento Watershed		
	ha	ac	% of watershed	ha	ac	% of watershed
Grasslands	4299	10623	13	2508	6196	8
Oak woodlands and savannas						
Valley oak woodland	636	1571	2	727	1796	2
Valley oak savanna	2596	6415	8	2986	7378	9
Blue oak woodland	10690	26415	32	7835	19362	24
Blue oak savanna	1714	4235	5	1073	2652	3
Coast live oak woodland	577	1427	2	146	360	0.5
Coast live oak forest	547	1351	2	804	1987	2
Chaparral						
Mixed chaparral	3868	9559	12	10905	26947	33
Chamise chaparral	6274	15503	19	4928	12177	15
Riparian						
Mixed riparian	1263	3121	4	276	681	1
Willow riparian	3	7	0.01	2	4	0.01
Cottonwood riparian	0	0	0	62	153	0.2
Valley oak riparian	12	28	0.03	16	40	0.05
Sycamore riparian	2	6	0.01	273	674	1
Seasonal and perennial wetlands						
Vernal pool	11	26	0.03	0	0	0
Vernal swale	135	334	0.4	0	0	0
Wet meadow	59	146	0.2	63	155	0.2
Pond	37	91	0.1	43	106	0.1
Developed areas	150	371	0.5	0	0	0
Unclassified	78	194	0.2	65	161	0.2
Total	**32950**	**81421**	**100**	**32711**	**80830**	**100**

Adapted from JSA (1994). Total acres differ from deeded acres due to minor boundary inaccuracies in database. (Source: FHL, INRMP, 2004)

Figure 11. Fort Hunter Ligget Communities in Each Major Watershed

Reservoir Environment

Habitats in the vicinity of the reservoirs include annual grassland, blue oak woodland and chaparral. Open areas on the hillsides surrounding the Nacimiento and San Antonio Reservoirs are dominated by annual grassland used for livestock grazing. Grasslands adjacent to the Nacimiento spillway are disturbed (i.e., ruderal) from previous dam construction activity. A large percentage of the plant species that occur in this habitat are non-native.

Non-native grasses and other herbaceous annuals that are common in this habitat include wild oat (*Avena fatua*), soft chess (*Bromus hordeaceus*), foxtail chess (*Bromus madritensis*), black mustard (*Brassica nigra*), sky lupine (*Lupinus nanus*), and Italian ryegrass (*Lolium multiflorum*). Immediately below the spillway, coyote brush (*Baccharis pilularis*) and Fremont cottonwoods (*Populus fremontii*) are scattered along the banks of the Nacimiento River; however, no mature riparian habitat is present directly below the spillway.

The area provides habitat for many of the animals that are common in the grasslands of southern Monterey and northern San Luis Obispo County. Wildlife species observed in this habitat during field surveys conducted for the Salinas Valley Integrated Regional Water Management

Functionally Equivalent Plan Update (2006) include California ground squirrel (*Spermophilus beecheyi*), mourning dove (*Zenaida macroura*), lark sparrow (*Chondestes grammacus*), and savannah sparrow (*Passerculus sandwichensis*).

Blue oak woodland, dominated by open stands of mature blue oaks (*Quercus douglassii*) and foothill pines (*Pinus sabiana*) is the predominant plant community in the vicinity of the reservoirs. Shrubs scattered in the understory include poison oak (*Toxicodendron diversilobum*), toyon (*Heteromeles arbutifolia*), and California buckeye (*Aesculus californicus*). Blue oak woodland provides important habitat for many of the wildlife species that occur in the foothills surrounding the Salinas Valley. Common species observed during field surveys include western scrub-jay (*Aphelocoma californica*), western bluebird (*Sialia larkia*), and western fence lizard (*Sceloporus occidentalis*).

Dense patches of chaparral occur on some of the steeper south- or east-facing slopes in the area. Chaparral is usually dominated by chamise (*Adenostoma fasciculatum*).

Shoreline and open water habitat on Nacimiento Reservoir and San Antonio Reservoir provides suitable habitat for a number of terrestrial and semi-aquatic wildlife species such as great blue heron (*Ardea larkia*) ruddy duck (*Oxyura jamaicensis*), western grebe (*Aechmophorus occidentalis*), and Clark's grebe (*Aechmophorus larkia*) (Salinas Valley Integrated Regional Water Management Functionally Equivalent Plan Update, 2006).

Downstream of Reservoirs

Habitat in the lower Nacimiento River is controlled largely by water releases from the reservoir above. The lower Nacimiento River is characterized by a low gradient and long, wide sections with sparse riparian vegetation. Typical substrate consists of gravel with lesser amounts of sand and cobble. Water temperatures in the River are highly variable; depending on reservoir releases, air temperature and reservoir storage. Prior to construction of the San Antonio Dam, the San Antonio River normally did not reach the Salinas River in late summer (Monterey County Flood and Water Conservation District, 1989). Conditions in the lower San Antonio River are dependent on releases from San Antonio Dam. The lower San Antonio River was characterized as a small permanent stream with a large quantity of submerged aquatic vegetation and some emergent aquatic vegetation. The aquatic habitat consists primarily of shallow-run habitat, and lesser amounts of pool and riffle habitat. The channel substrate is primarily composed of equal parts of sand and gravel with lesser amounts of cobble and silt (SVWP EIR, April 2002).

Figure 12. River Downstream of Nacimiento Dam

In general, water released through the Nacimiento Reservoir outlet is at a relatively constant temperature of 52 to 54° F (11.1° Celsius I to 12.2 ° C). The water warms rapidly as it moves downstream, generally in relation to fluctuation in daily air temperature. At minimum release levels (25 to 30 cfs), water temperature can increase to as much as 73°F (22.8° C) within 5 miles of the dam, and 75°F (23.9° C) within 10 miles of the dam. During the summer conservation release period (with flows of 300 cfs or more), water temperature is generally maintained at less than 64°F (17.8° C) within 5 miles of the dam, and 68°F (20° C) or less within 10 miles of the dam (SVWP EIR, April 2002).

Steelhead Habitat

NMFS has noted the paucity of data on steelhead in the Salina River System in its 2007 Biological Opinion.

> *Givern that there are very few data available on steelhead in the Salinas River, NOAA's Natinal Marine Fisheries Service has utilitzed data from nearby watersheds which tend to be similar to the Salinas River.* (NMFS, SVWP Flow Proposal for the Biological Needs of Steelhead in the Salinas River, April 2005)

The following information is excerpted from the Salinas Valley Water Project Biological Opinion, 2007.

> *Much of the habitat in the lower Nacimiento River is potentially usable for steelhead. Several potential spawning areas have been documented in the lower river and there are many deep pools. At times, there may be unfavorably warm water temperatures in the lower Nacimiento River, but deep pools may provide thermal refuge for steelhead. One area of the river continues to contain aquatic habitat in relatively good condition for steelhead. Reconnaissance level habitat surveys conducted immediately downstream of the Dam in spring 2000 documented the presence of steelhead spawning and rearing habitat with good cover, relatively cool water temperatures and dense riparian vegetation, and less fine sediments than found downstream. Even with these relatively better habitat conditions, habitat value for steelhead in this area is heavily influenced by flow levels and quality of water released from the reservoir .*

Figure 13. Steelhead Trout

> *Areas above the present sites of the Nacimiento and San Antonio dams comprised some of the best historical spawning and rearing habitats in the watershed. The Salinas Dam, which forms the Santa Margarita Reservoir in San Luis Obispo County, and the Nacimiento and San Antonio dams were constructed without fish passage*

facilities, and, therefore, the historic habitats above these dams are no longer available to steelhead. As a result, 286 miles of spawning and rearing habitat for steelhead have been lost; an estimated 149 miles of spawning and rearing habitat remain in the watershed (NMFS 2005c). Critical habitat for steelhead in the watersheds has been designated below both of the dams to the confluence to the Salinas River.

The current steelhead population in the Nacimiento River is likely at very low abundance. A redd survey conducted on February 26, 2003, between river mile 0 and approximately river mile 7 resulted in zero redds observed. The three miles of river closest to the dam were not surveyed. This un-surveyed area is thought to have the best spawning and rearing habitat based on sightings in 1998 and an unconfirmed sighting in 2001, steelhead are believed present within the Nacimiento River during years with high winter flow events in the Salinas River.

Steelhead Spawning and Rearing Habitat

The San Antonio River was one of the three most important spawning and rearing tributaries for Salinas River steelhead. The confluence of the Salinas and San Antonio Rivers is approximately 107 miles upstream from the mouth of the Salinas River. Following construction of the San Antonio Dam, the pattern of flow releases from the dam was not predicted to provide perennial flow conditions in the lowermost San Antonio River, and CDFG decided against developing a fishery downstream from the dam. Although the availability of steelhead spawning and rearing habitat was limited in the lower San Antonio River even before dam construction, CDFG still identified steelhead as inhabitants of the San Antonio River below the reservoir as of 1981. Presumably, it was assumed that steelhead still entered the lower river from the Salinas River when runoff was sufficient to provide a continuous migration corridor. However, lack of access to historic spawning and rearing habitats in the perennial headwaters greatly limits steelhead use of the San Antonio River. Currently, hydrologic conditions downstream of San Antonio Dam and other habitat conditions do not favor steelhead. NMFS staff walked the lower San Antonio River in August 2004, and noted riparian vegetation, gravels, and shading that could likely provide suitable spawning and rearing habitat. Nonetheless, surveys of the lower San Antonio River completed after the placement of San Antonio Dam show steelhead use is low.

Oak Shores Area

Two sensitive habitats were identified during a California Natural Diversity Database (CNDDB) search as occurring within the search area: sycamore alluvial woodland and valley oak woodland. Valley oak woodland occurs within the study area. The CDFG considers valley oak woodland to be a sensitive habitat (CNDDB, 2007) and of high inventory priority (CDFG, 2003) (Oaks Shores EIR, 2007).

Camp Roberts

At Camp Roberts, the Grassland Ecosystem, which includes the nutrients, soils, vegetation, plants and animals, and all the processes that have an influence on them, such as erosion, grazing, drought, flood, predation, as well as effects from humans covers roughly 20,634 acres (48 percent) of the training site. The Oak Woodland Ecosystem covers roughly 17,622 acres (41 percent) of the training site. The Riparian Ecosystem covers roughly 2,266 acres (5 percent) of the training site. The Chaparral/Scrub Ecosystem covers roughly 539 acres (1 percent) of the training site (Camp Roberts Integrated Natural Resource Management Plan, 2000). Natural Vegetation Communities and Ecosystems on Camp Roberts are provided in Figure 13.

Ecosystem/ Community or Habitat	Vegetation*	Wildlife*
Ecosystem		
Mixed Chaparral	Bigberry manzanita, buck brush, toyon, chamise, California sagebrush, black sage, hollyleaf cherry, poison oak, bedstraw, California peony, fiesta flower, deer weed, and grasses	Orange-crowned warbler, wrentit, California thrasher, brush rabbit, California mouse, western fence lizard, southern alligator lizard, western spotted skunk, and gray fox
Coastal scrub	Sticky monkeyflower, California sagebrush, black sage, California buck-wheat, and various grasses and forbs	Similar to those listed for grassland and chaparral
Closed-cone pine/cypress	Shrubby understory, □anzanita, poison oak, and some forbs	Similar to those listed for coastal scrub
Grassland Ecosystem		
Annual Grassland	Slender wild oats, brome grasses, pacific fescue, purple needlegrass, clover species, lupine species, goldfields, fiddleneck, popcorn flower, blue dicks, common plantain, filaree, tocalote, soft chess, and tarweed	California vole, California ground squirrel, western meadowlark, California horned lark, savannah sparrow, western kingbird, coyote, American badger, San Joaquin kit fox, and red-tailed hawk
Blue oak savanna	Blue oak, soft brome, ripgut brome, holly-leaf redberry, toyon, valley oak	Wild turkey, mule deer, acorn woodpecker, band-tailed pigeon, western bluebird, American kestrel, bushtit, gray fox, and bobcat
Oak Woodland Ecosystem		
Blue Oak woodland	Blue oak, coast live oak, annual grassland species	Wild turkey, mule deer, acorn woodpecker, band-tailed pigeon, western bluebird, American kestrel, bushtit, gray fox, and bobcat, dusky footed woodrat, California ground squirrel
Valley Oak Woodland	Valley oak, poison oak, toyon, coffeeberry, grasses, and forbs	
Coastal Oak woodland	Coast live oak, poison oak, crimson sage, miner's lettuce, California buttercup, and annual grasses	
Riparian Woodland Ecosystem		
Mixed riparian woodland	Fremont cottonwood, western sycamore, valley oak, box elder, elderberry, willow, mule fat, coyote brush, and mugwort	Wood duck, wild turkey, California quail, red-shouldered hawk, Nuttall's and downy woodpeckers, Bewick's wren, rufous-sided towhee, raccoon, Virginia opossum, long-tailed weasel, Pacific chorus frog, southwestern pond turtle, bald and golden eagles, and tule elk
Riparian scrub	Sandbar willow, coyote brush, and mule fat	
Valley foothill riparian[l] (includes sycamore alluvial woodland)	Valley oak, poison oak, toyon, coffeeberry, grasses, and forbs, sycamore	

Figure 14. Natural Vegetation Communities and Ecosystems on Camp Roberts

Ecosystem/ Community or Habitat	Vegetation*	Wildlife*
Wetland/Aquatic Ecosystem		
Seasonal wetlands (including vernal pools and artificial seasonal wetlands)[2]	Water pygmy-stonecrop, Vasey's coyote thistle, Mediterranean barley, small stipitate popcorn flower, popcorn flower, annual hairgrass, woolly marbles, crassula, spikerush, water starwort, filaree, vinegar weed, tarweed, Mediterranean barley, rabbitsfoot grass, curly dock, and toad rush	Vernal pool fairy shrimp, western spadefoot toad, western toad, Pacific chorus frog, mallard, cinnamon teal, killdeer, great blue heron, black phoebe, barn swallow, bullfrog, gopher snake, common garter snake, striped skunk, raccoon, and bats
Clay flats[2]	Annual hairgrass, Mediterranean barley, popcornflower, adobe navarretia, dwarf flax, and turkey mullein	Similar to that described for annual grassland habitat
Perennial Streams[2]	Generally unvegetated, but some support blue wildrye, Mediterranean barley, spreading rush, rabbitsfoot grass, curly dock, and popcorn flower	Similar to those described for annual grassland habitat
Intermittent Stream Drainages[2]	Slender wild oats, brome grasses, pacific fescue, purple needlegrass, clover species, lupine species, goldfields, fiddleneck, popcorn flower, blue dicks, common plantain, filaree, tocalote, soft chess, and tarweed	Same as annual grasslands.
Rivers[2]	None.	Pacific lamprey, Sacramento sucker, hitch, Sacramento squawfish, speckled dace, unarmored threespine stickleback, coastal rainbow trout, and prickly sculpin
Ponds and Reservoirs[2]	Cattails, bulrush, rush, willow, smartweed, lesser duckweed, streamside monkeyflower, white sweetclover, rabbitsfoot grass, and curly dock	Mallard, ring-necked duck, ruddy duck, cinnamon teal, and other waterfowl, great blue heron, great egret, greater yellowlegs, killdeer, red-winged blackbird, raccoon, coyote, gray fox
Freshwater marsh[2] (includes springs)	Cattails, bulrush species, rush species, willow species, smartweed, lesser duckweed, streamside monkeyflower, white sweetclover, rabbitsfoot grass, curly dock	Mallard, ring-necked duck, ruddy duck, cinnamon teal, and other waterfowl, great blue heron, great egret, greater yellowlegs, and killdeer.

*Scientific names are cataloged in Appendix B and C
[1]Sensitive natural communities (NDDB, 1999)
[2]A habitat type; not a natural community type.

Figure 14 (continued). Natural Vegetation Communities and Ecosystems on Camp Roberts

Water habitats

Three rivers, the Nacimiento, the Salinas, and the San Antonio traverse Camp Roberts covering a total of about 264 acres. The species listed in Figure 14 are those commonly associated with the rivers on Camp Roberts; however, the rivers also supply a drinking water source for many other animals on the training site.

Camp Roberts has 13 ponds and reservoirs (65 acres), which are either natural or artificially-created for use as livestock ponds and for flood control. These areas are now fenced to exclude livestock. Some medium and larger ponds support emergent wetland vegetation and riparian species along the receding water line or low water edge. These areas typically are inundated for a long duration and are considered jurisdictional wetland by the U. S. Army Corps of Engineers. Unvegetated portions of ponds are typically considered other waters of the United States because they lack hydrophytic vegetation. The low water zone, which is also dominated by hydrophytic species, would be considered jurisdictional wetland; however, unvegetated and vegetated components were not delineated separately in a Jones and Stokes Associates 1996 survey (CR INRMP, 2000).

A total of 120 aquatic species representing 64 families of organisms were recorded from rivers, ponds, and reservoirs on Camp Roberts. Three stations on the Nacimiento River (Twin Bridges, High Water Bridge, and Low Water Bridge) had the highest diversity of aquatic organisms. The greatest diversity of aquatic insects (28 species, representing 21 families) was recorded at a relatively undisturbed site on the Salinas River in the northeast region of the camp. Two families of mayflies (Ephemerellidae and Siphlonuridae), one family of aquatic bugs (Naucoridae, creeping water bugs), and one family of stoneflies (Isoperlidae) were uniquely surveyed at this downstream Salinas River station on Camp Roberts. An additional sensitive wildlife species occurring in the Nacimiento River is the southwestern pond turtle (CR INRMP, 2000).

Eight species of fish, comprising approximately 44 percent of the species native to the Salinas River drainage have been recorded at Camp Roberts from the Nacimiento River: Pacific lamprey, Sacramento sucker, hitch, Sacramento squawfish, speckled dace, unarmored three-spine stickleback, coastal rainbow trout, and prickly sculpin (CR INRMP, 2000).

Introduced species (either to North America and/or California) found were: goldfish, common carp, western mosquito fish, green sunfish, bluegill, largemouth bass, black crappie, and black bullhead. White bass and catfish have also been caught during the sport fishing program in the Nacimiento River (CAEV-CR database). Only one of the 10 ponds surveyed (Pond #8—Twin Ponds West) was inhabited by fish (introduced bluegill and black bullheads).

Plants of Camp Roberts

The Oklahoma Biological Survey (1997) undertook a post-wide floristic inventory in 1993 and 1994. Several specimens of each plant were collected, vouchered in a local herbarium, and laminated for a reference collection at Camp Roberts. Since that time, Land Condition Trend Analysis crews have collected and vouchered undocumented plants for inclusion in the reference collection each year during annual surveys.

As of September 2000, more than 613 plant species have been identified at Camp Roberts. The CR INRMP included the following on introduced species of plants.

> *Using the known species in 1998, Bern (1999) calculated that approximately 23 percent of known plant species at Camp Roberts (378 species) were introduced (i.e., non-native, exotic, or alien). Most of the introduced species were grasses (96 percent) (Bern, 1999). All floristic data collected in these surveys are included in the Camp Roberts Environmental Office database and are currently being update* (CR INRMP, 2000).

C. Water Quality

The existing water quality conditions of the Nacitone watersheds are summarized here by inspection of documents that describe past water quality assessment as well as the Nacitone Watershed Resources Inventory Final Technical Memorandum—Water Resources, Water Quality and Sediment Supply. No new data was generated for this study. State designated beneficial uses and point and nonpoint sources of pollution are also addressed in this section as established by Cal EPA and SWRCB regulatory authority.

General Regulatory Setting for Water Quality

The 1970 Porter-Cologne Water Quality Control Act gives the State Water Resources Control Board (SWRCB) and the nine Regional Water Quality Control Boards (RWQCB) authority to perform water quality regulatory oversight regardless of the source. Water quality control is defined by the Act as "the regulation of any activity or factor which may affect the quality of the waters of the state and includes prevention and correction of water quality or nuisance." Federal Clean Water Act Section 208 funds have been used to assess water quality conditions in California's 16 hydrologic basins and create water quality management plans, familiarly known as "Basin Plans" (Range Water Quality Management Plan, 1995).

The water quality objectives listed in the Basin Plan for the Central Coast region are intended to protect the beneficial uses of the reservoir, which include the following elements:

- Municipal and domestic water supply,
- Agricultural water supply,
- Groundwater recharge,
- Water contact recreation,
- Non-contact water recreation,
- Wildlife habitat,
- Cold fresh water habitat,
- Warm fresh water habitat,
- Fish spawning,
- Rare, threatened, or endangered species,
- Freshwater replenishment,
- Navigation, and
- Commercial and sport fishing

Waterbody Name	MUN	AGR	PRO	IND	GWR	REC1	REC2	WILD	COLD	WARM	MIGR	SPWN	RARE	FRESH	NAV	POW	COMM	BIOL	EST	AQUA	SAL	SHELL
San Antonio R. downstream from Res.	X	X		X	X	X	X	X		X	X	X	X				X					
San Antonio Reservoir	X	X			X	X	X	X	X	X		X	X	X	X	X	X					
San Antonio R. upstream from Res.	X	X		X	X	X	X	X	X	X	X	X	X	X			X					
Salinas R. Nacimiento R.- S. Margarita Res.	X	X	X		X	X	X	X	X	X	X	X	X				X					
Nacimiento R. upstream of Res.	X	X			X	X	X	X	X	X		X	X	X			X					
Salmon Creek	X					X	X	X	X		X	X	X				X					
Nacimiento Reservoir	X	X			X	X	X	X	X	X		X	X	X	X		X					
Nacimiento R. downstream of Res.	X	X		X	X	X	X	X	X	X	X	X	X				X					
Las Tablas Creek	X	X			X	X	X	X	X	X		X	X				X					
Las Tablas Creek, north fork	X	X			X	X	X	X	X			X	X				X					
Las Tablas Creek, south fork	X	X			X	X	X	X	X			X	X				X					
Franklin Creek	X	X			X	X	X	X									X					

The following is a list of codes associated with beneficial uses:
MUN = municipal and domestic supply,
AGR = agricultural supply,
PROC = industrial process supply,
IND = industrial service supply,
GWR = groundwater recharge,
REC1 = water contact recreation,
REC2 = non-contact recreation,
WILD = wildlife habitat,
COLD = cold fresh water habitat,
WARM = warm fresh water habitat,
MIGR = migration of aquatic organisms,
SPWN = spawning, reproduction and/or early development,
RARE = rare threatened or endangered species,
FRESH = freshwater replenishment,
NAV = navigation,
POW = hydropower generation,
COMM = commercial and sport fishing

Figure 17. Identified Uses of Inland Surface Waters per the Central Coast RWCQB Basin Plan

Further, under Section 303(d) of the 1972 Federal Clean Water Act, states are required to develop a list of water quality-limited stream segments that do not meet water quality standards, commonly referred to as the 303d list. The law requires that the states establish priority rankings for water on the lists and develop action plans, called Total Maximum Daily Loads (TMDL), to improve water quality. The RWQCBs are primarily responsible for developing the list, which is approved by both the SWRCB and the U.S. Environmental Protection Agency (Central Coast Water Quality Data Synthesis, Assessment, and Management [SAM] Project, Central Coast Water Quality Data Assessment Report, 2008.)

Total Maximum Daily Loads (TMDLs) in the Watersheds

Las Tablas Creek and Nacimiento Reservoir are listed as impaired for Metals on the 2006 Clean Water Act 303(d) list. In a RWQCB 1996 Water Quality Assessment Report, the RWQCB reports the Nacimiento Reservoir as impaired for metals (mercury) in fish tissue, and mainstem Las Tablas Creek and the north and south forks impaired for metals (mercury) associated with sedimentation as well as being high in total dissolved solids, electrical conductivity, sulfate, and nickel. The RWQCB's 2002 Watershed Management Initiative Report also indicates, "It is likely that nitrates in groundwater will increase in the future unless preventive measures are taken" (RWQCB WMI, 2002). As a result of the Clean Water Act 303(d) listing for Metals, the RWQCB adopted a TMDL for Las Tablas Creek and Nacimiento Reservoir in 2003; however, it was not approved by the SWRCB and is pending the results of the Record of Decision for the Klau Buena Vista Superfund Site.

Mercury TMDL and EPA Superfund Status

In many parts of the Nacimiento River watershed, the natural mercury levels in soil tend to be relatively high, since the area has numerous naturally occurring cinnabar (mercuric sulfide) deposits and mine sites. Estimates from the Regional Board Lake Nacimiento Loading Model indicate that approximately 77 to 93 percent of the total mercury loading into the reservoir enters from the Las Tablas Creek drainage area. (Las Tablas Creek and Lake Nacimiento, TMDL, 2002).

The Buena Vista and Klau mines in the Nacimiento River watershed have been identified as the primary point and nonpoint sources of mercury contamination in the watershed. Studies leading up to the total maximum daily load (TMDL) described the movement of mercury from the mines to Nacimiento Reservoir.

> *Below Buena Vista and Klau mines, mercury contaminated materials are primarily found in Las Tablas Creek sediments. It is presumed that coarser materials containing mercury are to be found throughout the sediment between the mines and Lake Nacimiento, and thus will continue to flow to the lake even if the mine facilities and surrounding hills cease to be a source of mercury pollution. Annual mercury loadings will depend on the proportion of this sediment stockpile that reaches the lake in any given year. It is possible that a high-level flood event (100-year storm or larger) could scour a very significant portion of this sediment from the Las Tablas Creek floodplain, although much sediment would be re-deposited in the floodplain channel as waters recede. Fine sediments would move more efficiently, so a very large percentage of the mercury-contaminated fines (silts and clays) will likely reach Lake Nacimiento. The level of Lake Nacimiento is seldom allowed to reach maximum stage, causing Harcourt Reservoir, a small impoundment located on Las Tablas Creek, adjacent to the reservoir and Nacimiento Reservoir waters to merge.*

Sediment-rich waters from Las Tablas Creek will deposit their fine suspended sediment load in the still waters of the lake. When the lake is at a low level, but receives high level floodwaters via the Las Tablas Creek Arm, previously exposed old lake floor sediments will be re-transported further north into the Las Tablas Arm and eventually into the main lake channel (Clean Lakes Assistance Program, 1994).

The TMDL identified control measures that were to be implemented at Buena Vista and Klau mines. Since the TMDL, the Buena Vista and Klau mines have been listed on the National Priority List (also known as the Superfund site list), which supersedes the TMDL. Remediation of the sites is under authority of the Environmental Protection Agency. A May 2007 EPA Newsletter for Klau and Buena Vista mines indicated that in June of 2006, EPA initiated a removal action. In 2007, the EPA installed several monitoring probes in streams to measure the effects of acid mine drainage on pH levels. An assessment will begin in spring 2008 to identify any endangered, threatened or sensitive plants or animals that may be affected by site contamination. EPA anticipates that a sampling plan for collecting soil samples and surface water samples will be completed by summer 2008.

Point Sources

The following are point sources, Leaking Underground Tank Clean up Sites, and permitted dischargers in the Watersheds.

Discharge	Point Source	Reference
Mercury	Buena Vista and. Klau Mines	Las Tablas Creek and Lake Nacimiento TMDL 2003
Potential Contaminants of Concern	**Leaking Underground Tank Clean Up Site (LUST)**	
Gasoline	Lake Nacimiento Resort boat launch	Geotracker RWQCB Case 3652
Gasoline	Lake San Antonio Resort Store and Fuel Station	Geotracker RWQCB Case 2905
	Dischargers with NPDES Permits	Reference permit #
	San Antonio River Watershed	
Sanitary wastewater	San Antonio Recreation Area South Shore Wastewater Facilities	RWQCB Order No. 01-131
Solid waste	Lake San Antonio North Shore Closed Class III Landfill	RWQCB Order No. R-32002-0056
Winery process wastewater	Winery	Waiver granted by RWQCB 9/17/03
Sanitary wastewater	San Antonio Recreation Area North Shore WWTP	RWQCB Order No. R3-2004-54
	Nacimiento River Watershed	
Solid Waste	Fort Hunter Liggett Class III Landfill Waste Disposal Site	RWQCB Order No. 87-149
	North shore Ski and Boat Club	RWQCB Order No. 89-74
Domestic wastewater	Heritage Ranch CSD WWTP	RWQCB Order No. R3-2006-0012
Domestic sanitary wastewater	Oak Shores Development Wastewater Treatment Plant – San Luis Obispo County Service Area No. 7	RWQCB Order No. 01-130
Domestic wastewater	Lake Nacimiento Resort	RWQCB Order No. 96-26

Figure 15. Point source Clean up Orders and Permitted Dischargers in the Watersheds

Heritage Ranch Community Service District (NRCSD) Discharge Permits

The CSD holds a Waste Discharge permit and an NPDES (National Pollution Discharge Elimination System) permit from the California Regional Water Quality Control Board, Central Coast Region for discharge of treated effluent. According to Heritage Ranch CSD Nacimiento Watershed Sanitary Survey (2005) the waste discharge permit is for discharge of Heritage Ranch treated effluent. The discharge point is an unnamed ephemeral creek. The discharge location is is on the district's 220 acre along G-14 (also known as Lake Nacimiento Drive), about 1.5 miles south of the entrance to Heritage Ranch and approximately 4 miles from the confluence with the Nacimiento River. Treated effluent entering the unnamed tributary flows approximately one mile downstream then percolates into the soil. The NPDES is required because during very heavy rain periods, discharge to the ephemeral creek could reach the Nacimiento River. The basic effluent limitations set by the RWQCB are that the discharge must be treated to a degree that protects groundwater, streams and riparian habitat. The current five-year permit held by Heritage Ranch Community Service District expires in 2011. Daily, monthly and annual testing is required of wastewater effluent. The State Water Resources Control Board must license district employees operating the wastewater treatment plant as Wastewater Treatment Plant Operators. The District has four employees currently certified as Operators (Heritage Ranch Sanitary Survey, 2005).

The quality of the Heritage Ranch Community Service District's wastewater influent is very good. This is characteristic of an influent that comes from almost all residential homes. There are few businesses in Heritage Ranch. The effluent is also correspondingly of high quality. The District has a history of compliance with all RWQCB limitation requirements. Summarized below are key effluent monthly limitations in the Discharge Order.

Parameter	Units	Limitation	Average
BOD	mg/L	30	20.09
TSS	mg/L	30	21.18
Settleable Solids [a]	ml/L	.1	0.01
Oil and Grease	mg/L	10	2.3
pH	--	6.5 – 8.3	7.15
Nitrate [a]	mg/L (as N)	8.0	non detect
Chlorine	mg/L	non detect	non detect
Copper [b]	µg/L	25.0	9.2
Mercury [b]	µg/L	0.07	.006

[a] Settleable solids and nitrates are daily maximum limitations.
[b] Copper and mercury limitations are interim until 4/1/10.
Reported data includes 2006 results.

Figure 16. Key effluent monthly limitation for the Heritage Ranch Wastewater Discharge

Nonpoint Sources

San Antonio River watershed

Analysis of the WRI documents did not reveal specific information on nonpoint sources within the San Antonio River watershed.

Nacimiento River watershed

The Heritage Ranch CSD's Nacimiento Watershed Sanitary Survey (2005) identified two primary potential nonpoint sources of contamination: (1) people who recreate on and around Nacimiento Reservoir and (2) cattle that have unrestricted access to almost the entire shoreline. Both of these conditions have existed either before or since the reservoir was created over 50 years ago.

A secondary source of potential contamination was identified in the form of wild-land fires, with the resulting erosion and debris affecting the reservoir. The resulting water runoff and sedimentation caused by fire burning of natural vegetation causes the contamination. The California Department of Forestry is responsible for fire suppression within the watershed. An accidental fire or a controlled burn that becomes out of control is of concern in this area (HR Sanitary Survey, 2005).

Mercury, while it has a definable point source, also behaves as a nonpoint source as it is carried from the point source, the mines, in sediment as it runs off in rain events. It has thus contaminated the food chain of Nacimiento Reservoir. Fish throughout Nacimiento Reservoir, including the Narrows, were found to have high levels of mercury. Mercury is a metal that can be harmful to the human nervous system when it is present in a form called "methylmercury." Methylmercury can affect human development. When mercury is in the sediment of a reservoir, small organisms transform it into methylmercury in their bodies. When small fish eat these small organisms they consume the methylmercury in the organisms. Predatory fish such as white and spotted bass that eat smaller fish consume all the methylmercury in their prey; therefore predatory fish have the highest levels of methylmercury (Oak Shores EIR, 2007). This has led to a San Luis Obispo County Environmental Health Division fish advisory for Nacimiento Reservoir that advised limited consumption of bass from the reservoir.

According to the Heritage Ranch CSD Sanitary Survey, studies and samples of reservoir sediment deposits revealed that mercury contamination exists in the water and bottom sediments of the reservoir and were highest in the Las Tables Creek arm of the reservoir. The water samples contained lower mercury concentrations than the bottom sediment samples. Of the 10 surface samples and 13 bottom samples measured, all were below the MCL (maximum contaminant level) for mercury of 2 micrograms/liter. The County of San Luis Obispo has sampled near the dam for mercury concentration. There have been 60 samples taken near the dam and all results have been <1 μg/L. The HRCSD sampling at its water intake facility at the Nacimiento River has also not detected mercury concentrations.

According to the Heritage Ranch CSD Sanitary Survey (2005) samples taken in 1995 in the following locations contained both *Giardia* and *Cryptosporidium*: at the dam, near a cattle grazing area, in the Nacimiento River upstream of the Heritage Ranch CSD well and downstream of the Heritage Ranch CSD final effluent entry site. Cattle were present only near the cattle grazing area. Both Giardia and Cryptosporidium were present at all of these locations and are generally expected in any surface water. However, it should be noted that reservoir water samples collected near the dam in 2002 by San Luis Obispo County Water Quality Lab did not contain *Giardia* or *Cryptosporidium* cysts (HR Sanitary Survey, 2005).

Humans carry both of these microorganisms and can contribute to their presence in water. *Giardia* and *Cryptosporidium* concentrations have the potential to be greatly increased by certain activities in a watershed. Fecal contamination from mammals greatly increases *Giardia* and *Cryptosporidium* loading to a water body compared to background levels as well as coliforms, *E. coli*, and other contaminants. Livestock in particular are significant sources of these microorganisms, especially *Cryptosporidium*. Beavers are especially known to carry *Giardia*.

Consumption of water with these microorganisms present can cause severe, long lasting (sometimes for a lifetime) gastrointestinal illness, sometimes with lethal consequences. It is important to note that consumption can be intentional (water users) or unintentional (swimming, water skiing) (summarized by L. Wallender, personal communication 2007).

While a comprehensive sediment budget was not found in documentation for the WRI, sediment yield in the watersheds was studied relative to mercury in the Las Tablas tributary to the Nacimiento Reservoir by the Coastal Resources Institute for the RWQCB and published in the Clean Lakes Assistance Program for Lake Nacimiento (1994). The value of 1,000 tons/square mile/year (about 1.56 tons/acre) was chosen as a relatively conservative sediment yield value for the entire Nacimiento River watershed basin. The figure was applied to the entire watershed, for although slope steepness was greater on the west side of the river, rocks are generally softer and more erodable on the east side of the river. With a watershed area of about 82 square miles (about 52,480 acres), sediment yield data from nearby watersheds would suggest a typical year's production of about 1,000 tons/square mile (Clean Lake Assistance, 1994). Sediment yield information is relevant in determining a rate at which mercury could be entering into Nacimiento Reservoir from Las Tablas Creek specifically and from the larger watershed generally. Sedimentation rate information would also provide an understanding of the expected life-spans of the reservoirs. SH+G has conducted a preliminary sediment budget for both watersheds which is discussed below in the Reservoir Features and Management section of Part 2.

Illegal drug production is also a threat to watershed health. As described by journalist Kera Abraham:

> *On the Los Padres site alone I discover three different brands of fertilizer, a hand-pump pesticide product and gopher killer pellets made with highly toxic zinc phosphide. Once introduced to the environment, these kinds of pesticides can ripple up the food chain, poisoning cougars, coyotes and condors that eat the tainted varmint. Totally unregulated in the hands of illegal growers, ag chemicals can do serious damage to the air, soil, water and wildlife.* (Wasted Wilderness from Monterey County Weekly, 2007).

The article also reported trash heaps associated with areas that had been used to grow marijuana. The Ventana Wilderness Alliance in coordination with the Forest Service is pursuing clean-up efforts.

San Antonio Reservoir Water Quality

Temperature and Dissolved Oxygen

Thermal stratification may occur in San Antonio Reservoir during spring, summer and fall. During the stratification period, surface water temperatures may range between 68 degrees F and 81 degrees F, while at depths greater than about nine meters water temperature is typically between 55 and 63 degrees F. Temperature profiles show a pronounced thermocline between approximately 13-30 feet in depth. These temperatures would be suitable for trout and other cold-water species, except trout also need relatively high dissolved oxygen (DO) concentrations. During summer months, the DO falls to very low levels below the thermocline, negating the possibility of trout habitat (SVWP EIR, April 2002).

Constituents

The Monterey County Parks Department utilizes San Antonio Reservoir water for public use. One measure of overall water quality that has been collected (October 13, 1997, MCWRA) is electrical conductivity (EC). The measured levels of EC of San Antonio Reservoir water ranged from 100 to 400 µmhos/cm, with an average value of approximately 300 µmhos. According to the SVWP EIR, this translates into an approximate total dissolved solids (TDS) level of 210 mg/l. The TDS secondary drinking water quality standard upper limit is 1,000 mg/l. Manganese levels, reported at 210 to 470 micrograms/liter, exceeded the Secondary Drinking Water Standard, as established by U.S. EPA, which is 50 micrograms/liter. The highest nitrate reported by the MCWRA is 4 mg/L as NO3, which is below the drinking water MCL of 45 mg/L as NO3 (SVWP EIR, April 2002).

Nacimiento Reservoir Water Quality

The Nacitone Steering Committee elected to contract with Swanson Hydrology and Geomorphology to review information compiled in the WRI Analysis and water quality data collected by the San Luis Obispo County Public Works Water Quality Lab between October 1995 and 2007 at the log boom in Nacimiento Reservoir. The remainder of the Nacimiento Reservoir Water Quality section is excerpted from a technical memorandum produced by SH+G.

> *Analysis of the Water Quality Lab data is useful as a cursory screening of water quality trends in the reservoir and watershed. Because these data were only collected at the log boom, their applications to understanding water quality issues that affect human health are limited. A much more comprehensive and long-term sampling effort within the reservoir, especially within the various arms and inlets of the reservoir where recreational use is high, would be necessary to develop a more complete picture of water quality and its potential impact to beneficial uses and human health.*
>
> *In the summer months, Lake Nacimiento is thermally stratified. Thermal stratification results in two distinct zones within the reservoir that have implications on water quality, reservoir circulation, and biological productivity. The upper layer, referred to as the epilimnion is well mixed and interacts with the surface water. The lower layer, referred to as the hypolimnion tends to be cooler, is not well mixed, and tends to have lower dissolved oxygen due to lack of replenishment from the upper layer. The thermocline, a transitional layer between the epilimnion and hypolimnion, varies seasonally and with changes in wind and temperature patterns, but typically occurs at depths ranging from 20- 30 feet. Samples were collected by SLO County in both the epilimnion and hypolimnion of the reservoir. The SLO County data includes sampling and analysis for the following constituents:*
>
> • *Physical parameters including temperature, pH dissolved oxygen (DO) and turbidity;*
> • *Inorganics including various metals;*
> • *General mineral content including chloride, sulfate and sodium.*
> • *Nutrients including various forms of nitrogen and phosphorus*
> • *Organics including volatile organic compounds (VOCs), synthetic organic chemicals (SOCs) and Methyl tert-butyl ether (MTBE); and*
> • *Micro-organisms including total coliform and E. coli*

Selected constituents in the SLO County data, collected at the "log boom", were evaluated for trends throughout the period of record and individual measurements that exceed the water quality objectives listed in the Basin Plan for the Central Coast region (RWQCB, 1999). In general, the analysis of the existing water quality data focuses on the key beneficial uses that are of concern to the NWSC, although discussion is provide for other beneficial uses if the observed impact on water quality in notable. A general discussion of water quality as it relates to water supply is also provided.

Physical Parameters

Physical water quality parameters influence numerous beneficial uses including, but not limited to, wildlife habitat, cold and warm fresh water habitat, and fish spawning. Figure 18 shows the trend in physical water quality parameters for the period of record. Seasonal temperature fluctuations in the epilimnion are significant, varying approximately 15ºC annually; temperature flux in the in hypolimnion is less pronounced, though the data show it can be significant. The Regional Water Quality Control Board (RWQCB) has not established a temperature threshold for the "cold fresh water habitat" beneficial use, but 20ºC is often considered the maximum limit for salmon and trout habitat. Epilimnion temperatures in the late summer and early fall exceed this threshold, but the hypolimnion generally remains below 20ºC. In the hypolimnion, dissolved oxygen (DO) concentrations are a limiting factor for salmon and trout habitat; the stated water quality objective is e"7.0 mg/L, which is often not met (Figure 18). Dissolved oxygen is a measure of the amount of oxygen dissolved in water. This oxygen is absorbed by fish and other aquatic species through their gills.

The data show turbidity in the reservoir often spikes with the influx of sediment during large winter storms (Figure 18). The sediment settles out in the summer and turbidity is not thought to be a limiting factor for aquatic wildlife-related beneficial uses. Water pH was generally recorded in the range of the water quality objectives.

Inorganics

Inorganic constituents, which include heavy metals, can be toxic to aquatic organisms and wildlife. High concentrations of metals can degrade or limit wildlife-oriented and domestic beneficial uses. Heavy metals are of particular concern for wildlife species that are consumed by humans because they accumulate in the tissue of organisms higher in the food chain. Figure 19 shows the trend for selected inorganic water quality parameters for the period of record. There are no major exceedances of the established water quality objectives, nor are there any obvious trends that would suggest beneficial uses will be adversely impacted by inorganic constituents.

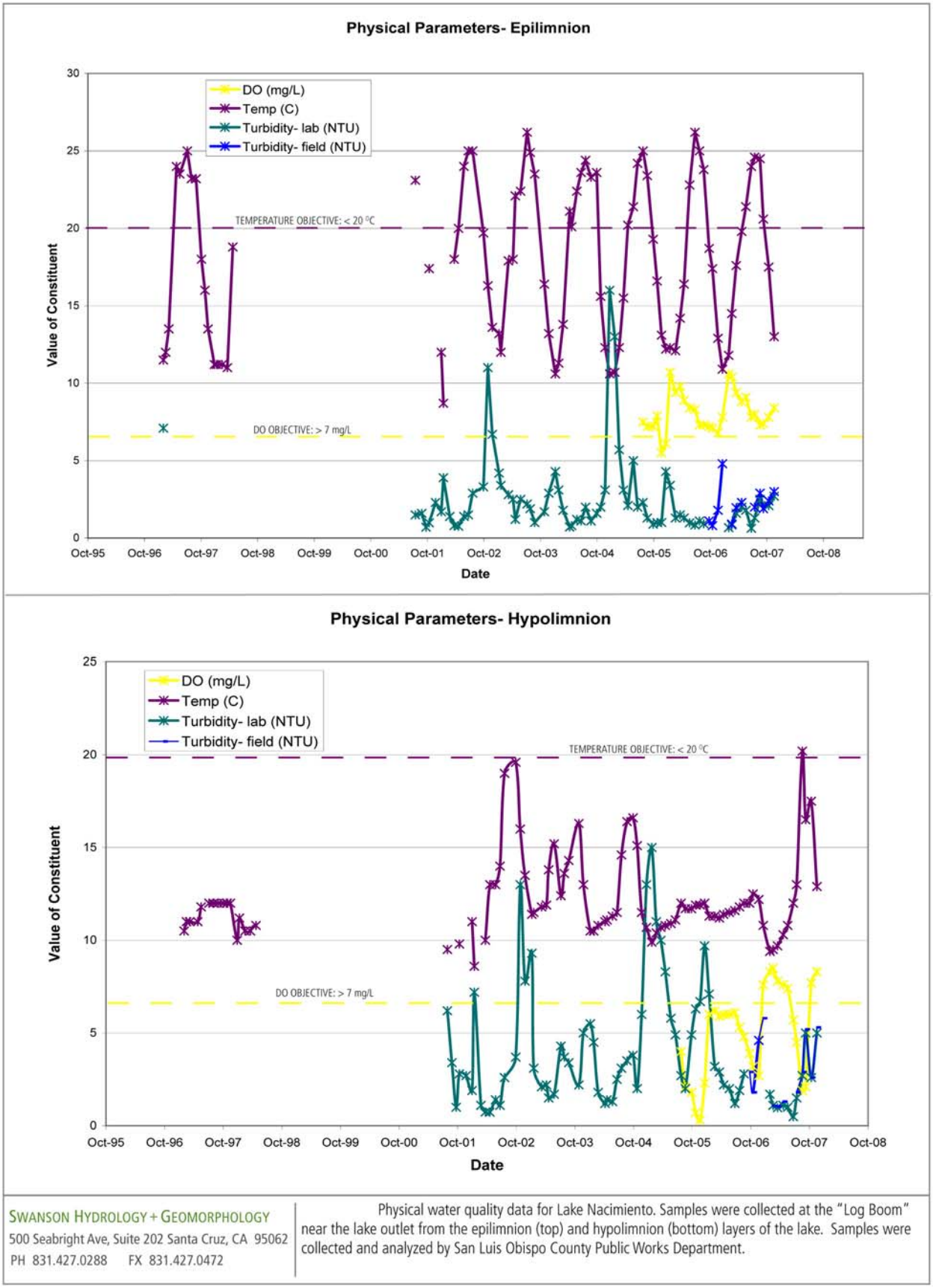

Figure 18. Physical Water Quality of Lake Nacimiento

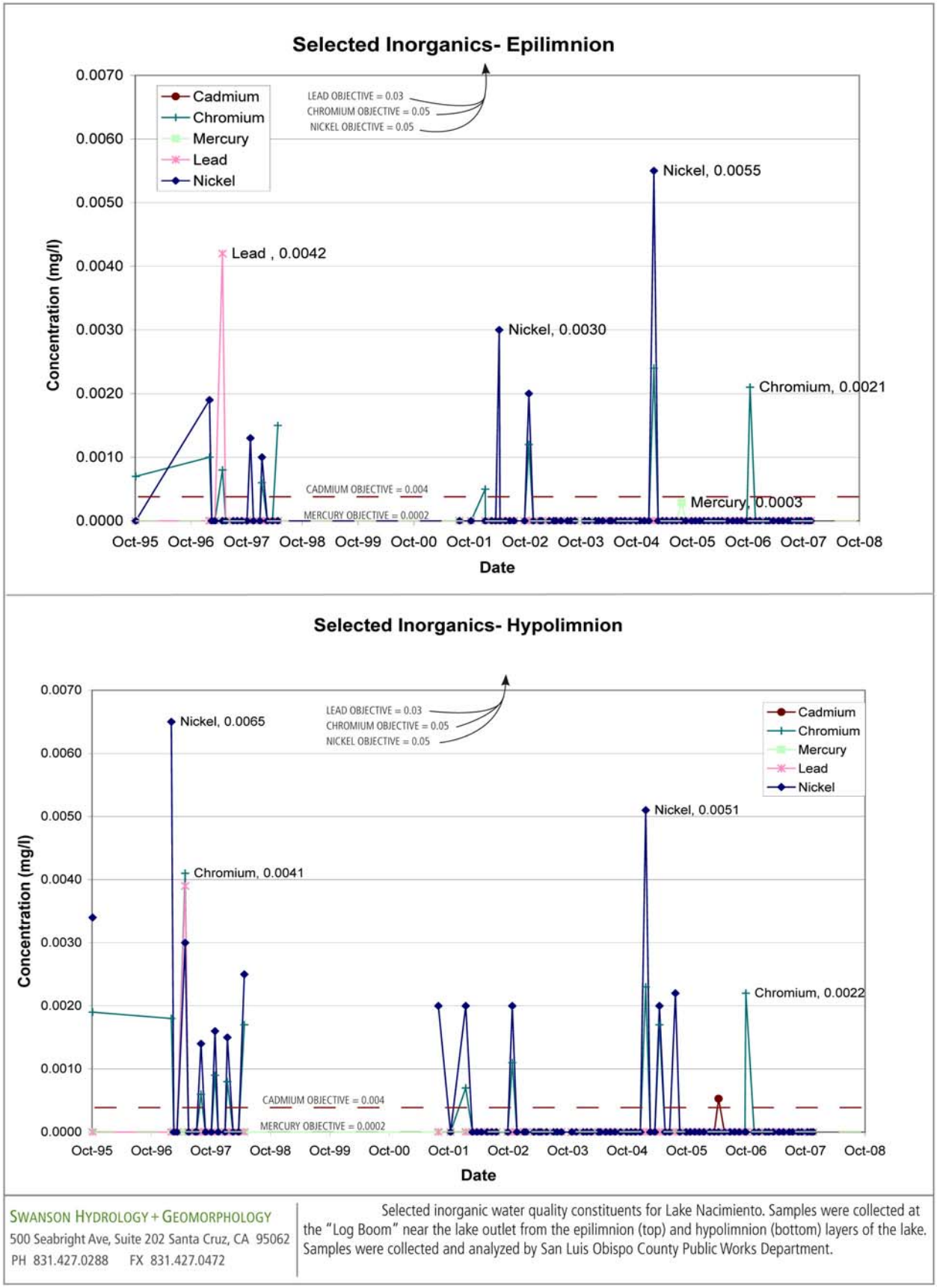

Figure 19. Selected Inorganic Water Quality Constituents from Lake Nacimiento

Mercury is a known contaminant of concern in the watershed. A sample collected from the epilimnion in August 2005 show mercury concentrations that exceed the established water quality objectives by 0.0001 mg/l (the water quality sample that recorded mercury levels above the detection limit represents 1 out of 118 samples collected at the log boom). Although mercury is toxic at low concentrations, this level of exceedance probably does not constitute a water quality concern. A more thorough analysis of mercury is being conducted by the Environmental Protection Agency (EPA) due to the presence of abandoned mercury mines in the Las Tablas watershed, a tributary of the Nacimiento River that directly enters Nacimiento Reservoir. EPA is preparing a wide variety of analyses as part of a Superfund Site (Remedial Investigation/Feasibility Study) *to evaluate the delivery and fate of the mercury from the mines. Because mercury binds to sediment and is transported downstream via erosion and sediment transport processes, it is difficult to trace the ultimate fate and amount of mercury that is directly reaching the reservoir.*

General Minerals

Minerals or salts dissolved in water contribute to the total dissolve solid (TDS) load. TDS is typically considered an important measure of water quality from a domestic or agricultural use standpoint. Specific water quality objectives have been established for the waters of the Nacimiento River for various mineral concentrations and TDS. Figure 20 presents the data for these parameters for the period of record, as measured at the "log boom". Overall, the individual constituents that contribute significantly to TDS are within the established water quality objectives. However, there appears to be a slight trend of increasing TDS concentration in Nacimiento Reservoir, especially in the epilimnion. Although it is difficult to determine the causes of an increase in TDS within the reservoir, one possibility to consider is the high evaporation rate off of the lake which may be increasing its long-term salinity as salts and other minerals accumulate in the reservoir. Prior to the reservoir being constructed, these minerals would be transported downstream and either discharge to the ocean or be deposited in floodplain areas. Following dam construction, the reservoir acts as a sink for these minerals and salts, which accumulate in the bottom sediments. A longer period of measurement is needed to determine if there truly is a trend of increasing TDS and what the potential causes may be. The possible trend observed in the existing data may be the result of year-to-year variations in reservoir inflow and seasonal variability.

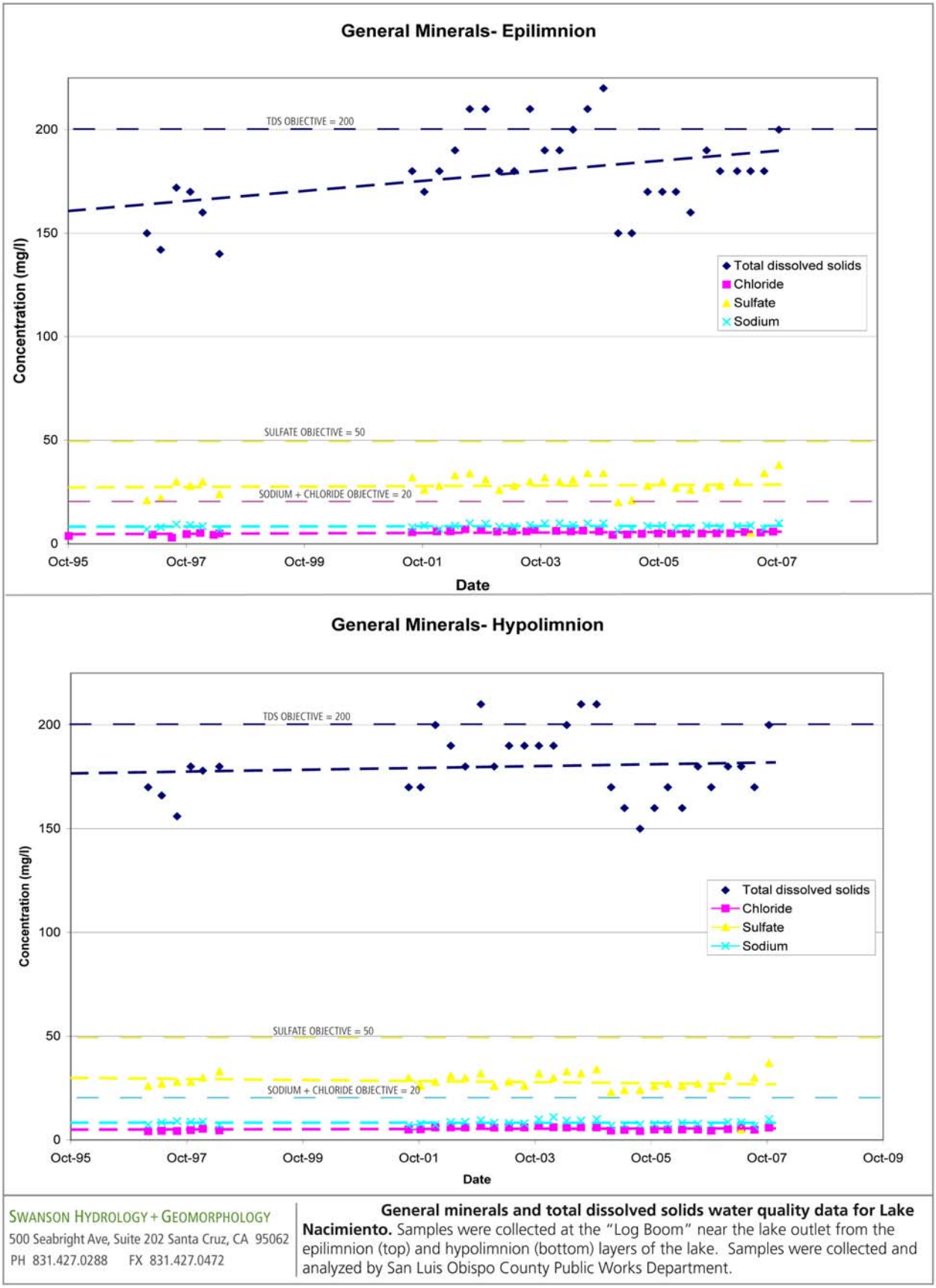

Figure 20. General Minerals and Total Dissolved Oxygen for Lake Nacimiento

Nutrients

High nutrient concentrations in water can degrade or limit nearly all beneficial uses, including aquatic and wildlife-oriented, domestic and agricultural beneficial uses. Figure 21 shows the nutrient data for these parameters for the period of record. There are no established water quality objectives in the Basin Plan for nutrients, but the levels detected in samples taken at the log boom are not likely to adversely impact the beneficial uses listed for the lake.

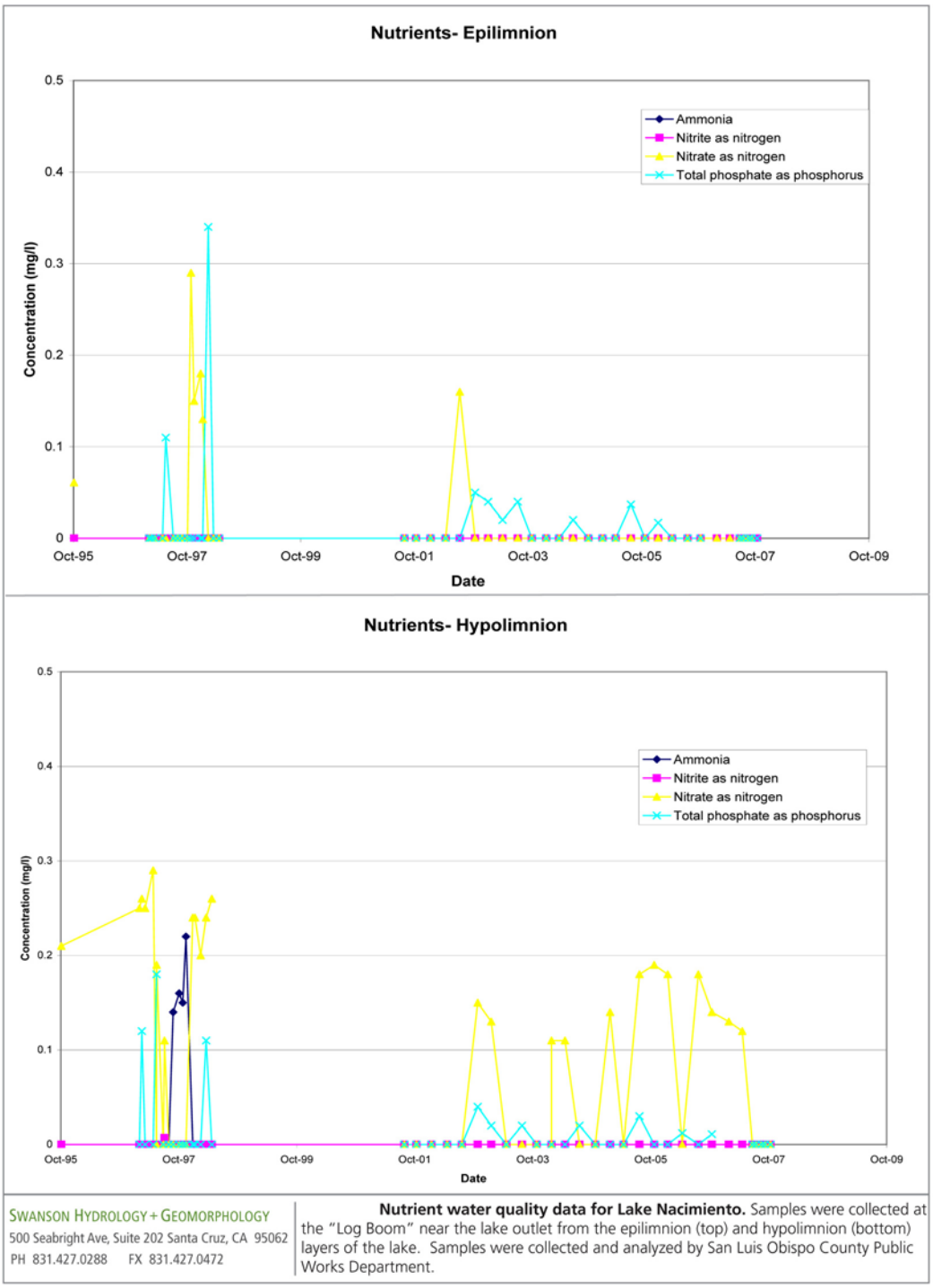

Figure 21. Nutrients for Lake Nacimiento

Anthropogenic Organics

The San Luis Obispo County sampling program tested samples, taken from the epilimnion, for atrazine (an herbicide), simazine (an algicide), MTBE, SOC's (e.g., pesticides, PCBs) and VOC's (volatile organic compounds). MTBE was detected during two sampling events in 2001, but has not been detected since. Bis(2-ethylhexyl)phthalate (DEHP) was detected during two sampling events in 2004, but has not been detected since. The MTBE was detected at relatively low concentrations (5.5 to 14 parts per billion- ppb); [DEHP was detected at 3.2 ug/L and 4/6 ug/L in late 2004. The Maximum Contaminant Level (MCL) for DEHP in finished drinking water is 6 ug/L; this is the highest level of a contaminant that is allowed in drinking water. Both values were below this MCL (Lisa Wallender, personal communication, 2008).] *The data suggest that there is no chronic MTBE or DEHP contamination at this sampling station.*

Microorganisms

The SLO County sampling program tests samples taken from the epilimnion and hypolimnion at the log Boom for microbial contamination including total coliform and E. coli concentrations. High coliform and E. coli counts in recreational water bodies can cause human health problems. Figure 22 shows the data for microbial contamination for the period of record. The data show that there are some spikes in total coliform count, but E. coli counts are relatively low.

SH+G indicated that a more robust data set is needed to evaluate the potential impact of microorganisms on the recreational use of Nacimiento Reservoir. They also indicated that sampling locations should be added to test high use swimming areas, especially in the summer months and within lake inlets where poor water circulation is likely.

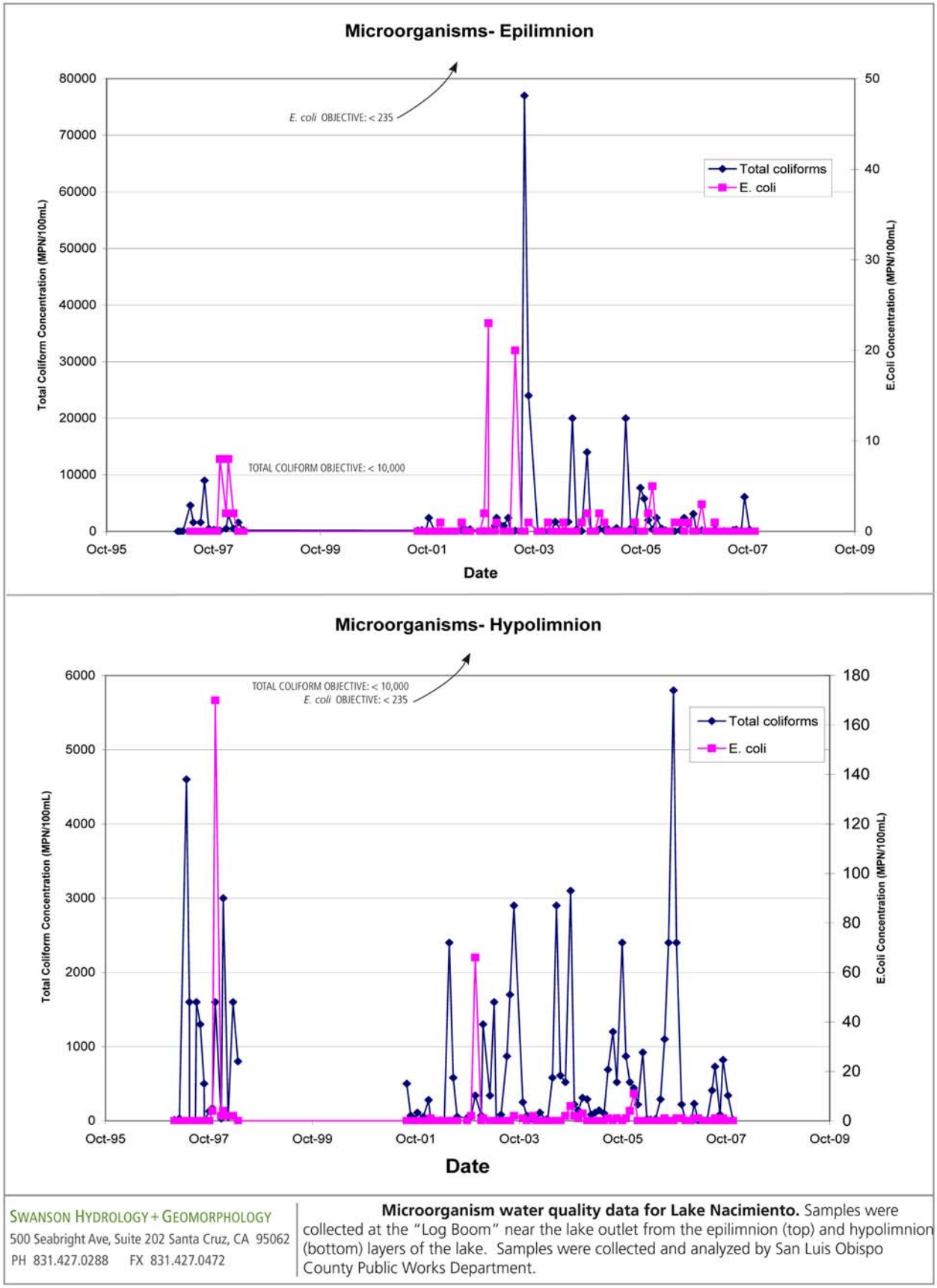

Figure 22. Microorganism Water Quality for Lake Nacimiento

Summary

The log boom data set provides a limited picture of water quality conditions within Lake Nacimiento. Given these limitations, the data suggests that the reservoir supports most of the designated beneficial uses. Temperature and DO concentrations limit the "cold fresh water habitat" beneficial use, but this is due to the physical structure of the lake and remediating this condition would be difficult, if not impossible. The data set collected at the log boom should be extended to other areas of the reservoir to provide a more comprehensive view of water quality conditions in Nacimiento that is both spatial and temporally relevant.

It is important to note that the data analyzed by Swanson Hydrology and Geomorphology was from samples taken at the log boom. Values for many constituents could be different for samples collected at other reservoir locations. An absence of problems in samples collected at the log boom does not necessarily mean there is an absence of problems in other areas of the reservoir.

Surface Water Monitoring Programs

The following is a synopsis of water quality monitoring programs that are either currently occurring or have occurred in the past.

San Antonio River watershed

The Monterey County Water Resources Agency (MCWRA) twice annually monitors reservoir surface water at the dam for dissolved oxygen (DO), temperature, nutrients and general minerals. Tributary surface water is also monitored for general mineral, nutrient, DO and metals (Conrad, 2001). Sampling for bacteria does not currently occur for San Antonio Reservoir.

Nacimiento River watershed

The MCWRA twice annually monitors reservoir surface water at the dam for dissolved oxygen (DO), temperature, nutrients and general minerals. Tributary surface water is also monitored for general mineral, nutrient, DO and metals (Conrad, 2001).

Heritage Ranch Community Services District

Testing for the presence of Methyl Tertiary-Butyl Ether (MTBE) at the Nacimiento River intake downstream of the dam has been part of the Heritage Ranch Community Service District's test protocol since 1996 for organic chemicals.

San Luis Obispo County Flood Control and Water Conservation District

The SLO County Flood Control and Water Conservation District (SLO District) through the Public Works Department Water Quality Lab monitors for physical parameters, general minerals, inorganics, volatile organic compounds (VOC),semi-volatile organic compounds (SOC), and other parameters at the log boom (about 1000 feet out from the dam).

Other Monitoring

Central Coast Regional Water Quality Control Board

The Central Coast Ambient Monitoring Program (CCAMP) is the Central Coast Regional Water Quality Control Board's (CCRWQCB) regionally scaled water quality monitoring and assessment program. Water quality data for the watersheds from CCAMP is available on the CCAMP web site (http://www.ccamp.org/ca300/3/3.htm). In addition, CCAMP staff is developing a multi metric "Health Index" that can be used to describe riparian and overall watershed health. Finally, the RWQCB groundwater clean-up program is ledged on Geotracker, which is a statewide environmental data information management system that tracks Leaking Underground Storage Tanks (LUST) sites.

Citizen Monitoring Programs

The Upper Salinas Watershed Coalition, the Coastal Watershed Council and the Ventana Wilderness Alliance are monitoring in surrounding subwatersheds according to the 2001 Salinas River Watershed: Status of Citizen Monitoring by the Coastal Watershed Council. (http://www.coastal-watershed.org/).

Central Coast Water Quality Data Synthesis Assessment and Management Project

The Monterey Bay National Marine Sanctuary is currently engaged in developing the Central Coast Water Quality Data Synthesis Assessment and Management Project (SAM). Implementation of the SAM project began on June 1, 2006, in order to facilitate region-wide water quality monitoring coordination, data dissemination, data management, and data analysis on the Central Coast of California. A 14-member Technical Advisory Committee (TAC) of water quality experts from around the state was formed to direct the activities of the SAM project. Water quality data was collected from 13 monitoring programs on the Central Coast and collated into a water quality relational water quality database with spatial fields that are coupled to a Geographic Information System (GIS). The database facilitates data dissemination and data analysis; including mapping and comparison with other spatially referenced data sets (Central Coast Water Quality Assessment, Conley, 2008). This program is listed here to alert those conducting water quality monitoring in the Nacitone watersheds so that they can consider collaborating with SAM to enter existing and future water quality data sets for the Nacimiento and San Antonio River watersheds.

Fort Hunter Liggett Water Quality Monitoring

Much of the Fort Hunter Liggett (FHL) installation boundary on the western side follows the coast ridge, so that virtually all rainfall to the installation is within the Nacimiento River or San Antonio River watersheds. Under the State Water Resources Control Board (SWRCB), Water Quality Order No. 97-03-DWQ, National Pollutant Discharge Elimination System (NPDES), General Stormwater Permit No. CAS000001, FHL monitors storm runoff for pH, specific conductivity (SC or EC), total organic carbon (TOC), total suspended solids (TSS), plus volatile and semi-volatile organic compounds, and heavy metals. This monitoring is in accordance with the Storm Water Monitoring Plan, U.S. Army, Fort Hunter Liggett, February 8, 1995 (FHL INRMP, 2004). Runoff is monitored at five points within the Cantonment area for petroleum, pH, volatile organic compounds, and total suspended solids. Points that are monitored for stormwater events are located on the San Antonio River at Nacimiento Road and at Sam Jones Road. Monitoring of total suspended solids, in particular, is important because it reflects erosion.

Surface water and groundwater quality has been measured to some extent since at least 1984 when the current hydrogeological study was completed (FHL INRMP, 2004). Water quality data prior to 1984 are intermittent and are not suitable for comparisons. Water samples obtained during the 1984 study, for several areas of the installation, may be used as a baseline. In order to infer whether water quality has changed since that study, we must focus on analytical parameters that were monitored during and subsequent to that baseline event.

Camp Roberts Water Quality Monitoring

As of a 2000 Camp Robert's Integrated Natural Resource Management Plan, eight monitoring sites at Camp Roberts were being monitored for pH, total suspended solids, specific conductance, oil and grease; one site was monitored for Total Kjeldahl nitrogen; one site was monitored for iron; and five sites were monitored for total and soluble lead. The annual report to the RWQCB was to be prepared and submitted by July 1 of each year. The report was to document the program results for the previous water year (July 1 through June 30). In addition, a water quality monitoring study is to be completed by Camp Roberts during their five-year planning period in concert with Stormwater monitoring program and aquatic habitat surveys.

Water quality was monitored by the USGS on the Salinas River (USGS 11150500 Salinas River near Bradley, California), 7.6 miles downstream of Bradley. Bradley is located near the northwestern corner of Camp Roberts at the confluence of the Salinas and San Antonio Rivers, both of which run through the training site. In general, water quality is acceptable for most uses. Nitrate levels range up to 5 mg/l as N. Calcium and sodium are the predominant cations. Levels of total dissolved solids and selenium are relatively high and approach the maximum acceptable levels determined by the Regional Water Quality Control Board and EPA. However, these constituents occur naturally in the Salinas and San Antonio Rivers. Intensive surveys of both rivers are needed (Camp Roberts Integrated Natural Resource Management Plan, 2000).

Groundwater Monitoring Programs

<u>San Antonio River watershed</u>

Monterey County Water Resources Agency, formerly known as the Monterey County Flood Control and Water Conservation District (MCFCWCD) collected data on a monthly basis for 10 wells in the Lockwood Valley area. General mineral water quality analyses were performed on two to three of these wells annually (Geotechnical Consultants, Inc., 1984).

The primary water type in the Lockwood groundwater basin is bicarbonate type with calcium and magnesium cations (DWR Bulletin 118, 2004 Update). The Monterey County General Plan (1982) describes the water in the area as being both good and plentiful, although the water is highly mineralized. The water is not contaminated by nitrates or tainted by sulfur.

<u>Nacimiento River watershed</u>

The 2003 San Luis Obispo General Plan Land Use Element/Circulation annual resource summary report indicated that the Paso Robles Basin groundwater quality is exhibiting increasing total dissolved solids (TDS) along the urbanized Salinas corridor, near San Miguel, and near the confluence of the Salinas River and Nacimiento Rivers. Increasing chlorides are also noted near the Salinas/Nacimiento River confluence. An understanding of whether upstream land uses are contributing to increasing chlorides would be useful.

Fort Hunter Liggett

According to the FHL INRMP, groundwater monitoring was reported for the period of 1997-2002 with a baseline established in 1984. Many chemical and physical parameters were analyzed for samples taken from shallow well 236 and provided in Table 9 of the INRMP.

> *For these general chemical and physical parameters, there has been no significant change in the shallow groundwater quality. Those compounds that have established Maximum Contaminant Levels (MCLs) for drinking water are present in concentrations far below those MCLs. Data for organic and metal compounds are not presented, due to the lack of baseline data. However, there are no known occurrences of organic compounds in the groundwater from Well 236 and only minor detections of normally occurring metals. This would indicate that military activities are not currently affecting groundwater quality.*

<u>The INRMP section on groundwater quality concludes that:</u>

> *Although military activities within the Cantonment and in field training areas have the potential to impact both surface and groundwater, data available to date suggest that water quality on FHL has not been impaired. Further data may be needed to define sediment and the nutrient loads in the headwaters (outside of FHL influence) of both the San Antonio and the Nacimiento rivers in order to assess effects of military activities for those parameters. Normal ongoing review and implementation of the Stormwater Monitoring Program will continue to identify and reduce possible contaminant sources of storm-water.*

Camp Roberts

Groundwater quality is generally considered to be acceptable for its designated uses (see designated beneficial uses for Camp Roberts below). No bacteria have been detected in water pumped from the wells at Camp Roberts; however, well water that is used for domestic purposes is treated with chlorine as a precaution. No other treatment has been necessary.

Calcium and sodium are the predominant cations found in the Camp Roberts training site's groundwater. Groundwater is also high in total dissolved solids (boron, calcium, sodium, magnesium, and iron).

Thirty groundwater monitoring wells are located at potential sources of contamination, such as the landfill and the Wastewater Treatment Plant. A number of these test wells are associated with remediation sites, such as a fuel facility, Building No. 936, where underground storage tanks have been removed. Most are monitored quarterly. Under regulations by the Regional Water Quality Control Board, wells to the north and south of the Wastewater Treatment Plant are tested monthly (CR INRMP, 2000).

Fish Tissue Monitoring

The California Department of Fish and Game sampled Nacimento Reservoir as part of the Statewide Lakes Study during the summer of 2008. The sampling consisted of one composite sample of carp tested for organochlorine pesticides, PCBs and PPDEs. Also collected were composite samples of small mouth bass and carp for mercury analysis. Final data will be available by the end of 2008 (Mary Adams (RWQCB), personal communications, 2008.)

D. Watershed Uses

General land use descriptions

In 1994, land use in the Nacimiento River watershed was cited as about 50% grazing, 47% open space, 1% housing, 1% camping and 1% inactive mines (Clean Lakes Assistance Program for Lake Nacimiento, 1994).

Agriculture is the primary land use in the watersheds with grazing and dry land farming as the primary agricultural land use. Vineyards and wineries are becoming increasingly economically vital. Residential suburban development is primarily located around Nacimiento Reservoir within the communities of Heritage Ranch and Oak Shores. Residential suburban development varies in density from low to high density with some areas of Heritage Ranch and Oak Shores having residential suburban zoning lots sizes as small as 10,000 or less square feet.

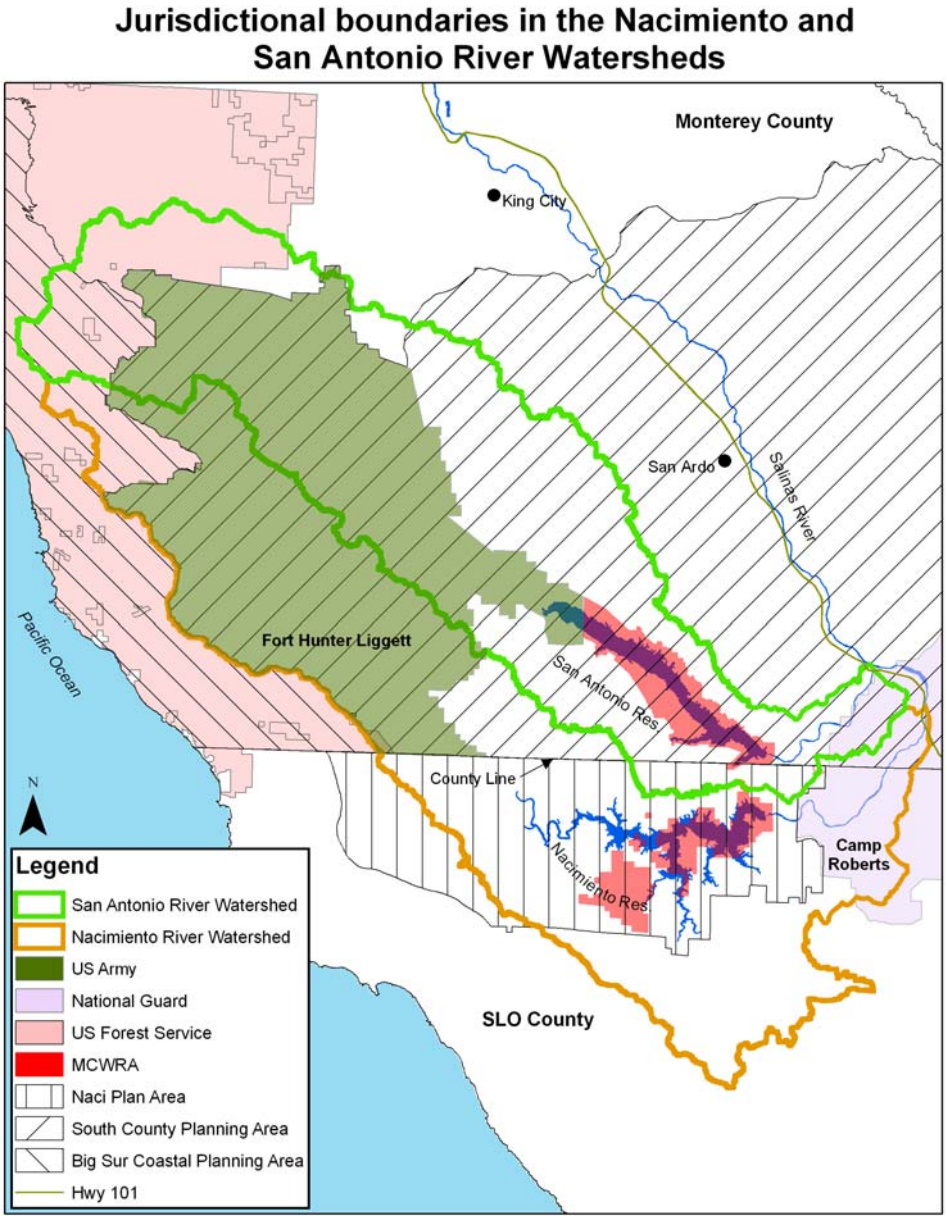

Figure 23. Planning areas in the Nacimiento and San Antonio River Watersheds

Despite the rugged terrain of most of the Nacimiento Planning Area and the concentration of recreational activities at the reservoir, the economy of the region surrounding Nacimiento Reservoir remains based upon agriculture. Grazing is the primary agricultural pursuit, though some dry farming occurs in limited areas as does raising horses and commercial hunting on private property (French, personal communication, 2008). Commercial activities around the reservoir are mostly visitor-serving, and oriented toward peak-use periods. While the role of recreational and visitor-serving commercial activities will experience gradually increasing importance in the planning area economy as development around the reservoir intensifies, the planning area is unlikely to develop a discrete employment base within the term of this plan (Nacimiento Area Plan, 2003).

Farming and Ranching

The San Antonio Valley and the Adelaide portion of the Nacimiento watershed are the primary cultivated agriculture areas of these watersheds. Rangeland used for animal grazing and in some areas hunting and fishing, covers approximately 50% of the land in these watersheds including military and MCWRA lands. This section describes the existing conditions of cultivated agriculture and rangeland management as they relate to water quality and watershed health. It is important to understand how this vital part of the local economy and environment operates in order to identify implementations or recommendations that might be effective to meet the goal of protecting water quality in these watersheds.

AGRICULTURAL CROP PRODUCTION

Agriculture in these watersheds continues to change just as it does statewide. However, rangeland comprises the majority of agricultural acres with grain crops, wine-grapes, and tree crops making up the bulk of the acres. Other crops are also grown with acreage varying depending on the year. These other crops can include: spring salad mix, spinach, tomatoes, cantaloupe, herbs, lettuce, strawberries, almonds, apples, apricots, artichokes, olives, pumpkins, and outdoor plants. Vineyard production in these watersheds has changed over the past 10 years. The San Antonio Valley wine appellation was established in 2007 with approximately 15 vintners (wine makers) and growers. Between the San Antonio reservoir dam and the Salinas River lies the Hames Valley with vineyards and several hundred acres of vegetable crops.

	Acres recorded by Monterey County Agricultural Commissioner	**Grains**	**Grapes**	**Rangeland**	**Tree crops**	**Acreage represented by these crops**
2006	**58,317**	1,556	1,283	45,957	79.5	
		2.67%	2.2%	78.8%	0.14%	**99.08%**

Source: Monterey County Agriculture Commissioner's office

Figure 24a. Acres of Top Agricultural Commodities in the San Antonio Valley, Monterey County

	Total Crop Acres	Grains	Wine grapes	Rangeland	Tree crops	Uncultivated/ non crop acres	Rotational	Pastureland
2006	8,926.92	1,686	1,010	3,507	954	650	820	210
2007	8,186.92	none recorded	1,040	none recorded	1,003	3,987*	1,906	210

* 3,147 of these acres are categorized as "undeclared"
Source: Crop report data provided by San Luis Obispo County Agricultural Commissioner's office

Figure 24b. Acres of Top Agricultural Commodities in the Nacimiento Watershed, San Luis Obispo County

Water quality regulation in place throughout the Central Coast applies to all commercially sold, irrigated agricultural crops. As of July 2004, operators of these croplands were responsible for enrolling into a Conditional Agriculture Waiver program and complying with conditions to prevent the cause, or contribution to, the degradation of water quality. Between 2001 and 2005, in both Monterey and San Luis Obispo counties approximately 90% of irrigated agricultural operators completed 15 hours of continuing education specifically focused on water quality protection practices across the following four management areas:

- Irrigation (management, efficiency)
- Fertilization (management, handling)
- Sediment (erosion control, soil health)
- Pesticides (integrated pest management, handling)

Under the Conditional Waiver Program, each irrigated agricultural operator is required to have a Farm Water Quality Plan and provide updated information to the Regional Water Quality Control Board on an annual or bi-annual basis. The Regional Board began conducting field visits to randomly selected program enrollees in 2007 and will subsequently focus on non-enrolled operators. Participants in the Conditional Agricultural Waiver also pay annually for monthly water quality data collection and interpretation conducted by a third party entity and submitted to the Regional Board. None of the current monitoring locations under this program are in the Nacitone watersheds since none of their waterways or water bodies are listed as impaired for agriculturally related pollutants. There is some irrigated agricultural land immediately adjacent to the San Antonio River below the dam. Farmers in the San Antonio Valley and Adelaide area have completed their Conditional Agricultural Waiver requirements and are actively engaged with their local Farm Bureau and Farm Centers to receive any additional information as it becomes available.

Williamson Act Agricultural Lands

The California Land Conservation Act of 1965, commonly referred to as the Williamson Act, enables local governments to enter into contracts with private landowners for restricting specific parcels of land to agricultural or related open space use. In return, landowners receive property tax assessments that are much lower than normal because they are based upon farming and open space uses as opposed to full market value. Nearly 16.9 million of the state's 29 million acres of farm and ranch land are currently protected under the Williamson Act. Land in Williamson Act protection for the Nacitone watersheds for which information was available is provided in Figure 25a.

Monterey County	Land Use	Acres
	Grazing	24,693
	Vineyards/Orchards	796
	Row Crops	1,032
	TOTAL	26,521
San Luis Obispo County	Conservation Acreage,	81.75
	Transfer of Development Credit (TDC) Program—	5,600
	Grizzly Bend to Monterey Co. line	8,000
	TOTAL	13,682

Sources: SLO County Land Conservancy, Ventana Wilderness Society

Figure 25a. Williamson Act Lands for the Nacitone Watersheds

GRAZING

Cattle, sheep and horse grazing began in the San Antonio Valley when Mission San Antonio de Padua was founded by Fray Junipero Serra in 1771; growing crops began at the same time. The cattle were raised for their hides and tallow which were shipped to Spain. The missions were secularized by the government of Mexico in 1831, and the mission lands were taken from the Franciscan friars and given to the church. Between 1834 and 1846 soldiers and friends of the Mexican government were given land grants. Three had the San Antonio River flowing through them: Milpitas (a milpa is a planted field, milpitas means little fields or gardens), Los Ojitos (little eyes or springs), was granted to Mariano Soberanes, and El Plieto (litigation or dispute). El Piojo (louse) and San Miguelito de Trinidad were near the Nacimiento River. These lands encompassed 115,000 acres of land, used for grazing. The "Californios" lived a colorful life, with vast herds of cattle roaming the rich grasslands. When the Americans took over California in 1848, the grants were open to litigation and some went to heirs of the Californios, some were bought up by rich outsiders. Some ranchos were bought piece by piece by William Pinkerton, James Bolton, William Earl, Faxon Atherton and others. A drought in the mid-1860's killed many cattle. Homesteaders arrived in the late 1870's and more land was devoted to crops. Descendants of homesteaders Ethelbert Sanders Harris, Jan Henry Martinus, Willlian Augustus Weferling, George Christian Heinsen, B. F. Patterson, Edward Gillett, Gottlieb Roth, John Park Hamilton Smith and others farm and ranch in the area today (Raycraft and Beckett, 2006 and Fisher, 1945).

Grazing now occurs on both private and public lands. The acreage of land use dedicated to grazing is approximately 50% of the Nacimiento and San Antonio watersheds including military and MCWRA ground (Coastal Resources Institute, 1994). Currently available data on cattle numbers, location and grazing and land management practices on private lands in these watersheds are spotty. More and better information is needed to maximize improved resource management benefits.

Grazing as a Management Tool

Grazing can be a beneficial tool for the management of invasive and native plant species, for fire management and for improving habitat for threatened and endangered species, all of which contributes to a healthy watershed.

According to a University of California Cooperative Extension (UCCE) article entitled "UC Cooperative Extension Helps Bring Cattle Grazing Back to Bay Area Grassland" (February 2007), farm advisor Sheila Barry, who has researched the modern evolution of California grasslands and low impact rangeland management techniques, discusses the benefits of grazing.

> *…a major benefit of grazing open grassland is fire fuel management, Barry said. However, she believes an even more important driver is improving the habitat for threatened and endangered species, such as the red-legged frog, the California tiger salamander, the Western burrowing owl and the golden eagle.*
>
> *Even insects profit from grazing. Barry considers the Bay Checkerspot Butterfly to be the "poster child of grazing benefits."*
>
> *"It's a classic story," she said. "The only remaining populations of this butterfly are on grazed lands. In areas that were specifically set up for conservation and where cattle grazing was eliminated, the butterfly populations have disappeared."*
>
> *Grazing is managed by controlling season of use and intensity, especially in sensitive areas. Livestock water, supplemental feed and salt are used to control grazing distribution. Barry has been collaborating on a USDA-funded research project with other advisors and UC range specialist Mel George to further understand the effectiveness of livestock distribution in working towards resource management objectives. The project, known as "Cows in Space," uses global positioning collars to monitor the location of livestock on rangeland pastures at the Sierra Foothill Research and Extension Center in Browns Valley, Yuba County.*
>
> *Barry credits ranchers' efforts over the years to implement conservation-minded management practices for illustrating the benefits of grazing to control vegetation and preserve wildlife habitat on public land. "These land management agencies are conscientious about the total ecosystem impact from grazing," Barry said, "just as ranchers have been for decades."*

According to nativehabitat.org, cattle stimulate plant growth and increase annual forage yield by grazing. Through their urine and feces, cattle recycle nitrogen, phosphorus, potassium and other plant nutrients and return them to the soil. By trampling plants that have grown too coarse and brittle to eat, cattle increase the amount of litter on the ground. (This reduces soil and water erosion and helps increase the amount of water that enters the ground and aquifers.) When properly managed cattle convert solar energy captured by native grasses into a sustainable source of meat, leather and other valuable products for human consumption.

According to an article entitled "Good Grazing? Advocates say free-range Cattle Can Have Environmental Benefits," in E: The Environmental Magazine (Nov-Dec 2002), and attributed to Steve Rich, a consultant with Higher Ground Associates in Salt Lake City, Utah which works to build bridges between ranchers and environmentalists,

> *"A hoof print is a hole and holes are wonderful things in nature. They collect water, seeds and nutrients. They are shadier and less windy and a heck of good place for seedlings to start. I have done thousands and thousands of samples and hoof prints make up more than 90% of seedling germination sites."*
>
> *This claim is backed by such evidence as a 1998 Colorado State University study that found biodiversity to be highest in moderately grazed lands and lower under heavy grazing, but lowest of all on ungrazed lands* (Proctor, 2002).

In addition to providing traditional products as meat, leather, tallow and more, well managed range lands and private ranch lands support healthy watersheds, recreational opportunities and wildlife habitat.

According to an article depicting a speech by R.L. Dahrymple at the Missouri Forage and Grassland Council 2000 Annual Meeting entitled "Fringe Benefits of Rotational Grazing",

> *Rotational grazing, with adequate recovery periods, increases forage production. Runoff water and water contained in streams and impoundments is clearer and presumably of higher quality for stock and human use.* (Dahrymple, 2000)

Local cattle ranchers in the Nacimiento and San Antonio who practice healthy rotational grazing would like to see more public entities implement and or expand rotational grazing programs, i.e. FHL, Camp Roberts, Monterey County and the U.S. Forestry.

Given the above information and in light of current conditions such as increased urbanization and a threatened food supply, ranchers and environmentalists will need to find a balanced perspective in order to sustain a healthy environment and safe and abundant food supply. The Nacitone watersheds provide an opportunity to develop positive collaborative resource management efforts among ranchers, environmental groups and public agencies.

Grazing in the Nacitone

The grazing areas for which information was reviewed for this Plan include the MCWRA leases around Nacimiento and San Antonio Reservoirs, FHL and Camp Roberts military installations, Los Padres National Forest and private land.

The table below was constructed to further understand the acreages involved with agriculture. For their "rangeland" category, the county Agricultural Commissioners include a mix of private and public ground and may not include all properties actively being grazed. From a total of approximately 451,386 acres in the two watersheds combined, 50% is entrusted to the listed public entities.

Grazed Acres in Both Watersheds					
	Total grazed and non-grazed acres (including acres not in these watersheds)	**Total grazed and non-grazed acres in watersheds**	**GRAZED acres in watersheds**	**GRAZED acres in Nacimiento river watershed**	**GRAZED acres in San Antonio river watershed**
Camp Roberts	42,615	22,975	22,975		
Los Padres	315,510	28,965	2,150	0	2,150
Fort Hunter Liggett	162,355	162,065	0	0	0
Monterey County Water Resources Agency (MCWRA)	23,617	23,617	16,692	8,865	7,827
SubTotal PUBLIC	**543,807**	**237,912**	**41,817**	**8,865**	**9,327**
PRIVATE LAND	NA	213,464 *	?	?	
Totals	NA	451,386			

Figure 25b. Grazed Acres in Both Watersheds

Sources: Geographic Information Systems calculations; information provided by Los Padres National Forest Monterey District (leaseholder).
An alternative source states that Camp Roberts has a total of 26,100 grazed acres which may include land outside of these watersheds.
* This number is the difference between the public acres in this table and total acres of both watersheds combined.

Monterey County Water Resources Agency

The MCWRA owns approximately 24,000 acres (38 square miles) or approximately 5 percent of the land in the Nacitone watersheds. 16,000 of these acres are located around the reservoirs and make up eight separate parcels leased out for cattle grazing since the land was purchased in the 1950's and 1960's. The remainder of the 24,000 acres is in recreational camping areas, grassland and oak forest (USLT RCD, 2008). In 2007, when the MCWRA renewed its grazing leases, they required all lessees to attend a *Ranch Water Quality Short Course* developed and administered by UC Cooperative Extension. The Short Course was conducted in November 2007 by UC Cooperative Extension and contributing partner entities such as the USLT RCD, the Natural Resources Conservation Service (NRCS), UC Davis researchers, the Ag Watershed Coalition of Northern SLO and Southern Santa Barbara counties, and the Nacitone Steering Committee. Current leases on MCWRA land will expire in 2010. The MCWRA Board of Directors may decide to incorporate new requirements into future lease agreements as recommended in a ***Grazing Lands Management Plan*** prepared by the *Upper Salinas Las Tablas Resource Conservation District* (USLT RCD) which is further described later in this section.

Currently, MCWRA grazing lease contracts contain the following Conservation Goals and Objectives:

1. Protect the water quality and quantity of reservoirs. A goal of the MCWRA is to eliminate access by cattle to reservoir waters as soon as possible.

2. Minimization of fire hazards through vegetative fuel management and responsible livestock management.

3. Preservation of open space for recreation, scenic beauty and education, and preservation of native plants and animals, and biotic communities. All or portions of the MCWRA land, including the Premises, may be made open to the public subject to reasonable restrictions determined by Landlord.

4. Maintenance of rich and productive grassland and oak woodland communities with healthy populations of rare, threatened or endangered vertebrates, significant native grasses, and for components and minimal exotic pest plants.

5. Restoration of degraded vegetation and wildlife habitat.

6. Maintenance of livestock distribution over the premises, to achieve uniform range utilization, reduce overall fire hazard, minimize sacrifice forage areas and meet conservation objectives.

7. A key requirement for any lease will be the completion of a ranch plan within one year of execution of a contract, which will lay out specific measures that will be used on each lease to protect the water quality and quantity of the reservoirs.

At both reservoirs, MCWRA owns four parcels, leased for grazing, located along the shores of the Nacimiento reservoir. There are also other privately held lands with a variety of uses around that reservoir. In contrast, the land around the San Antonio reservoir is owned by MCWRA except for a portion held by FHL, and is divided into another four separate parcels of leased land. Some existing fencing is located below the high water mark. During certain times of the year this means that range livestock and wildlife currently have access to shorelines of

both reservoirs and their tributary streams. Rugged terrain and arid climate make centralized feedlot areas infeasible (Nacimiento Water Supply Report on Recreational Use at Lake Nacimiento, 2002). Seasonal and release-related water level changes result in significant fluctuations in the amount of land available for grazing on these properties.

A ***Grazing Lands Management Plan*** was prepared for lands owned by the MCWRA by the Upper Salinas Las Tablas Resource Conservation District (USLTRCD), 2008 and is included in its entirety in Appendix C. The Plan was funded through the same grant that funded the Nacitone Watersheds Management Plan and is expected to help the MCWRA establish land management measures for rangeland health and water quality protection on their 16,000 acres of grazed lands located around both reservoirs.
The Grazing Lands Management Plan assesses current grazing and rangeland management practices on those lands and recommends a mix of existing and alternative practices. The Nacitone *Watershed Strategy* contains some of these recommendations that owners of private grazing lands may also find useful as they consider how best to protect downstream water quality and other watershed resources.

The ***Grazing Lands Management Plan*** recommends livestock grazing as the primary management tool for MCWRA land.

> *The Plan finds that cattle grazing, if conducted properly, can have the following benefits:*
>
> - *Reduces fuel load for potential fires,*
> - *Improves grass regeneration,*
> - *Improves habitat for many animal and plant species,*
> - *Reduces encroachment of noxious weedy species, and undesirable types of plants, and improved maintenance of grasslands and oak woodland diversity.*
>
> (Grazing Lands Management Plan, USLT RCD, page 2)

Fort Hunter Liggett

Grazing has been a significant land use for more than 200 years, since settlement during the Mission Era. Grazing continued on the Hunter Liggett Military Reservation beginning in 1942 with the issuance of leases that did not specify management or conservation practices. The first land management plan was developed in 1948 and periodically revised from 1948 to 1972. Grazing was discontinued in 1991 after a prolonged drought and over-use that resulted in significant resource damage to herbaceous vegetation (Stechman, 1995). In October 1993, land management responsibility for FHL was transferred from Fort Ord to Fort Lewis, Washington. Early in 1994, FHL and Fort Lewis contracted with The Nature Conservancy to produce a comprehensive grazing assessment with recommendations for grazing management consistent with an overall natural resources management plan (Stechman, 1995 and FHL INRMP, 2004). In 2003, a plan for livestock grazing was developed for FHL (Bartolome et al. 2002, 2003). This document was not reviewed by the Nacitone Steering Committee.

The ***Integrated Natural Resources Management Plan*** prepared for FHL in 2004 and amended in April 2007 describes current challenges with re-establishing grazing on FHL.

> *Livestock grazing was discontinued on FHL in 1991 due to resource degradation from over stocking and utilization combined with six years of extreme drought conditions from 1984 through 1990. Livestock grazing has*

not been allowed since that time because a clear livestock grazing strategy had not been developed that would prevent resource degradation from re-occurring.

Additional complicating issues have emerged which pose significant resource management conflicts, especially with endangered species management and associated critical habitat designations and proposals. Cultural resource protection issues are also present. Additions and rebuilding of existing fence is likely to cause conflicts with the military training mission. Additional staff will be required to adequately plan, conduct, and monitor a grazing program. Funding of a livestock grazing program through lease agreements may be problematic because out-lease revenues are deposited in a Department of Army account and are not dedicated to the installation where the revenue is generated. ***(INRMP, 2007, page 136).***

Fort Hunter Liggett (FHL) is a military installation with a primary mission to train military personnel to fight war. Training is conducted in an individual and collective environment. The Installation mission has significantly changed and grown since commercial livestock grazing was last allowed in the early 1990's. Training activity has increased from an average of 150,000 training days in the early 1990's to approximately 700,000 training days in training year 2008 (October 2007- September 2008). Training levels have spread out throughout the entire year to all parts of the installation and are projected to exceed 1.2 million training days in FY10 and beyond (an 800% increase since 1992).

"The Army's environmental mission is to sustain the environment to enable and support the Army mission and secure the future." Environmental stewardship is conducted through the Integrated Natural Resource Management Plan (INRMP) conservation programs which are coordinated with the Director of Plans Training, Mobilization and Security (DPTMS) to determine optimal mission landscape requirements for supporting mission purposes (AR 200-1). Conservation reimbursable agricultural/grazing out-lease programs are to be compatible with mission requirements and provide a direct benefit to mission and environmental goals.

As the FHL mission continues to expand it is expected that commercial livestock grazing or similar activities would pose unacceptable conflicts with training activities for the foreseeable future. Based on the FHL senior staff's evaluation of the 2004 INRMP goals and objectives and the current/forecasted FHL training mission, commercial livestock grazing is incompatible with that mission. The FHL Command will not pursue further evaluation of a commercial livestock grazing program on FHL during the next INRMP cycle 2009-2013.

Camp Roberts

Livestock grazing has been an important component of the multiple land uses on Camp Roberts for many years. Cattle and sheep have grazed much of the acreage since the military's resumption of livestock grazing in 1942. Livestock grazing has been known to occur on the property for at least 200 years prior to the military's acquisition.

Agricultural lands just east of Camp Roberts are in Conservation Reserve Program contracts with the USDA. These contracts are used to control erosion on highly erodible lands.

Approximately 20,500 acres on the Main Garrison, with a carrying capacity of 5,400 AUM's* each lease year, will be available for sheep grazing for a six-month period between January 1

and June 30. Approximately 5,600 acres on the East Garrison, with a carrying capacity of 2,000 AUM's each lease year, will be available for cattle grazing for a five-month period between January 1 and May 31.

Recent changes to the grazing program have removed 1,500 acres of riparian areas and the river terrace between East Bradley Road and the Salinas River, which contains sensitive cultural sites within the East Garrison, and 6,320 acres of land from the high country along the southwest border of the Main Garrison from grazing. An additional 4,700 acres (Training Area O, north of the Nacimiento River, portions of TA's P and L between the rivers and the impact area, and portions of the cantonment area were formally incorporated into the Main Garrison sheep lease) were added to the lease.

Grazing Restrictions on Camp Roberts

In many areas, banks along the Nacimiento River are steep and unstable. The Nacimiento River riparian ecosystem also contains numerous cultural resource sites. To preserve and protect the integrity of cultural resource sites and riverbanks from degradation, maintain water quality, and preserve native species biodiversity, sheep grazing will not be permitted in the Nacimiento River or in adjacent riparian habitat. Sheep will cross the Nacimiento River only by using the Low Water Bridge. Soils in these locations are steep, rocky and erosive, lack adequate forage, and are not suitable as sheep bedding sites. The majority of known sensitive plant locations on Camp Roberts are located in this region.

Rotational grazing will continue to be practiced on the Main Garrison by limiting sheep pens and shepherd trailers to a 3-day maximum stay in any one location. Rotational grazing distributes grazing more evenly throughout the Main Garrison and prevents overgrazing or overuse of specific areas.

Revenue generated through the grazing leases is reinvested on the installation, usually through maintenance of firebreaks, repair/replacement of fencing, cattle guards, water appurtenances, etc. Supplemental agreements for projects or work to be done are drafted up and made part of the grazing lease, and work is accomplished by the lessee in partial lieu of rent. Grazing revenue collected covers administrative costs of the program, and the program will adhere to appropriate Army Regulations (CR INRNP, 2000)

Camp Roberts Grazing BMPs

- Implement rest-rotation grazing strategies on both garrisons.
- Change livestock entry date to January 1 of each lease year.
- Limit number of animal unit months (AUM's) available.
- Define an AUM equivalent as follows: 1 ovine ewe, ram or weaned lamb = 0.2 AU (un-weaned lambs are not counted); 1 weaned calf to yearling = 0.65 AU; 1 yearling steer or heifer (1-2 years old) = 1.0 AU; 1 cow with (or without) un-weaned calf, heifer > 2years old = 1.0 AU; 1 bull > 2 years old = 1.5 AU.
- Use herding techniques (herders, range riders) to improve animal distribution and use of forage.
- Place salt blocks and feed supplements less than ¼ mile from watering sources and surfaced roads.
- Remove and dispose of dead livestock near watering sources immediately.
- Exclude or intensively manage grazing in sensitive areas (riparian zones, reservoirs, and fairy shrimp plots) and steep and highly erodible areas.

- Maintain intact boundary fences and remove trespassing livestock immediately upon discovery.
- Prohibit cattle and sheep access to Camp Roberts rivers and riparian areas except at designated crossing sites. Provide/develop watering sites away from these areas.
- Maintain adequate plant and ground cover at all times (maintain 75% cover and a minimum of 1000-1200 lbs. Per acre of residual dry matter).

Camp Roberts Rangeland Improvements

Rangeland improvements on the Main Garrison include cool prescribed burn areas for thistle in the southwesterly and Nacimiento River drainage areas. "Cool" burns are preferred for rangeland improvement. Using fire as a tool at Camp Roberts on rangeland should neither take acreage out of forage production nor defer the grazing season and the Camp Roberts Fire Department supports it.

"Cool fire" burns are executed on cooler days with higher levels of humidity and the area burned is done so without a contiguous effect, thereby creating a patchwork appearance between burned and non-burned areas. In a cool burn, the effects of the fire allow for faster recovery of plant populations, less damage is done to seed banks, and the same desired affect of biomass and species composition control can be achieved. Rebuilding of soil mulching and plant cover is improved and takes fewer seasons than with conventional control fires or accidental burns.

Los Padres National Forest

Grazing is also permitted in the Los Padres National Forest including in the Ventana Wilderness in the upper San Antonio River watershed. According to the Assistant Resource Officer for the Monterey District of the United States Forest Service (USFS) and documented in USFS Grazing Permits Parts 1 and 2 on file with the District, there is one active permitted grazing allotment in the San Antonio River watershed and some vacant allotments on the books. The active allotment is referred to as the Upper Milpitas Allotment., It contains two pastures, the Milpitas Pasture and the Wagon Caves Pasture. This allotment includes approximately 2,150 acres. The maximum head as of September 7, 2007 was 90 cows, 90 calves and 6 bulls, with stock on the land seasonally, typically from February to May. The permit for the allotment is effective until September 2017.

There is an Allotment Management Plan that is 40 or more years old. The District utilizes Forest Plan Standards for residual dry matter (RDM) to monitor range conditions and generates allotment-monitoring reports. There is also approximately 10 head of livestock on the Merle Ranch, which is operated by the Forest Service.

Mining

Mining in the watersheds has a long history. The Clean Lake Assistance Report (Coastal Resources Institute, 1994) includes detail of historical districts for mining. The MCWRA has produced a map using a Geographic Information System (GIS) showing mine locations in both watersheds and is included in electronic format in Appendix J (maps). Currently operating mines are limited to the Lime Mountain Quarry. This is an open pit mine located at the top of Lime Mountain in the Nacimiento River watershed. The mine produces high quality limestone and is permitted to mine up to 200,000 tones per year. Williams Hill Mine produces sandstone and shale for decorative rock and is located in the San Antonio River watershed. As mentioned above in the Water Quality section, the Buena Vista and Klau mercury mines are no longer in operation and will require lengthy remediation by the U.S. EPA.

Recreation

Both Nacimiento and San Antonio reservoirs are used for recreational purposes, including fishing, motorized and sail boating, camping, hiking and water skiing/wakeboarding, swimming, wading, and day use (picnics). The Lake Nacimiento Resort, which is owned by Monterey County Water Resources Agency, is zoned recreational.

Nacimiento Reservoir has 165 miles of shoreline that provide a variety of opportunities for day and overnight recreational activities. Although the peak recreational season at the reservoir is between Memorial Day and Labor Day, year-round activities include picnicking, camping, fishing, hiking, swimming, boating, sailing, water-skiing, jet-skiing, and sunbathing. There are several developed recreational areas, both private and public, along the shoreline. The Monterey County Parks Department provides law enforcement and regulation of boating activities. The Parks Department also manages in-lake facilities such as buoys, shallow markers, and floating restrooms. The largest public recreational facility at Nacimiento is the Lake Nacimiento Resort (SVWP EIR, April 2002).

Current facilities managed by the Monterey Parks Department and a private management company at Nacimiento Lake Resort include: a full-service marina, 21 lake shore lodges, 360 improved campsites, a playground, swimming pool, restaurant, hiking trails, hot tubs, country store, picnic area, and boat moorage facilities with approximately 120 marina slips.

There are also privately managed facilities along Nacimiento Reservoir's shoreline. The two largest are the Heritage Ranch and Oak Shores developments, each providing 50 campsites and marinas with approximately 100 boat slips. The facilities are available only to property owners and their guests. In addition to these two developments, a total of approximately 300 additional private docks are provided by the following: Running Deer Ranch, Tri-Counties Boat and Ski Club, Cal-Shasta Boat and Ski Club, South Shore Village, North Shore Boat and Ski Club, and several private individual lakeshore property owners (SVWP EIR, April 2002).

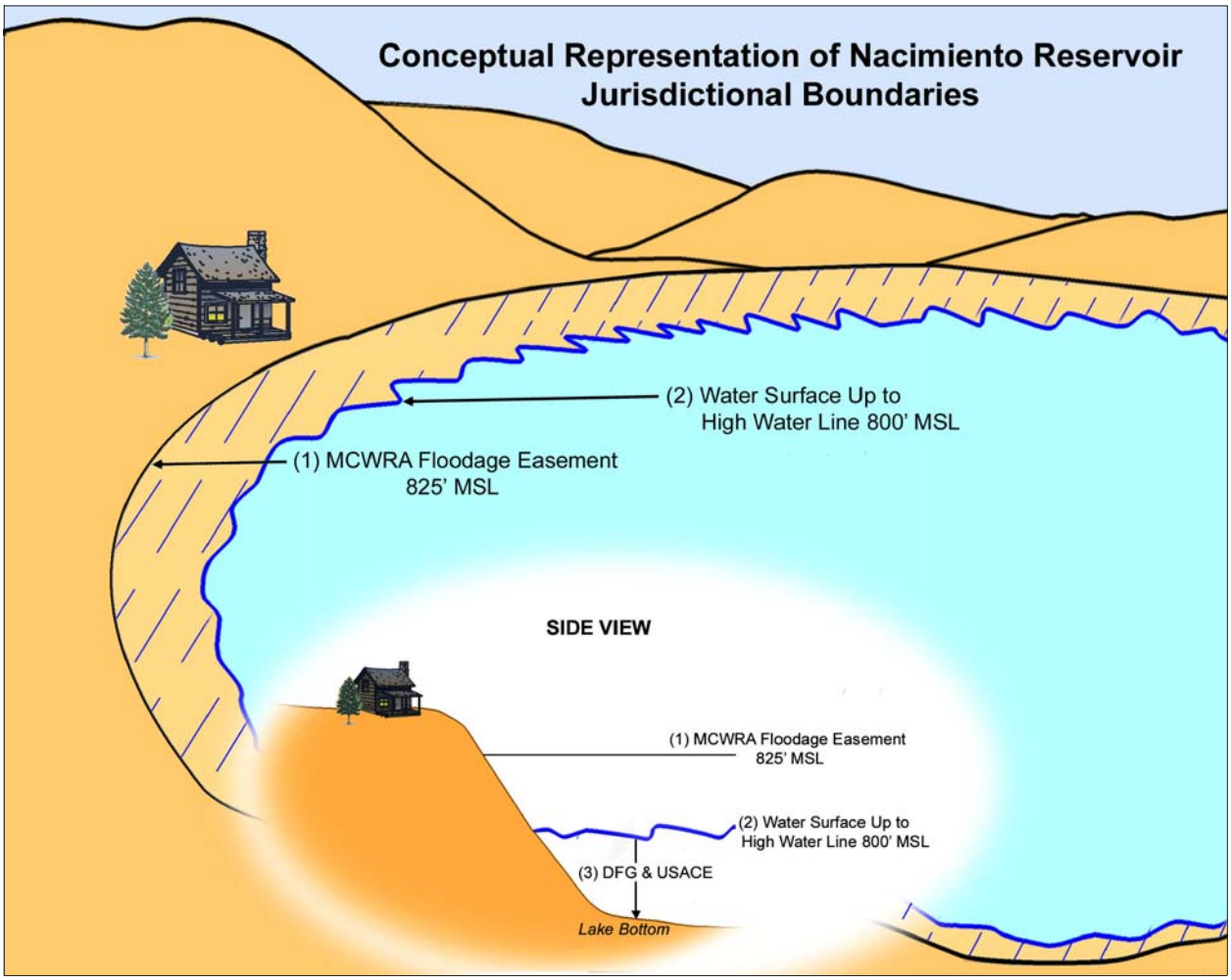

Figure 26. Nacimiento Reservoir Jurisdictional Boundaries

(1) MCWRA owns easement to flood all properties up to 825'Mean Sea Level (MSL) around Nacimiento Reservoir.
(2) Water Surface and on MCWRA land – Monterey Co Parks has law enforcement powers.
(3) State Dept of Fish and Game and U.S. Army Corps of Engineers have permit authority for all work below 800' MSL.

SLO Sheriff Dept has law enforcement powers at all elevations.
SLO Planning Dept has permit authority at all elevations.

Note: Throughout the state the State Water Resources Control Board is charged with preventing water pollution including silt originating at any elevation.

Disclaimer- this diagram is a simplified representation of overlapping jurisdictions which apply to private property located around the Nacimiento Reservoir and is not intended to present a definitive legal opinion.

Private property owners immediately adjacent to Nacimiento Reservoir are subject to a confusing set of multiple jurisdictional boundaries, additional responsibilities, regulations, and reduced property rights. MCWRA owns a floodage easement up to and including the 825′ MSL elevation on all lands around the Nacimiento reservoir. Because the property is located in San Luis Obispo County, law enforcement, health, building and planning regulation falls under that County's jurisdiction. Because the reservoir is designated as "waters of the United Sates", lands around them are subject to California Department of Fish and Game and U.S. Army Corps of Engineers regulation. Disturbance of reservoir bottom or construction below the high-water mark (800′ elevation) requires a consultation with California Department of Fish and Game and might require a permit. Structures, which could impinge on flows of water, may require a U.S. Army Corps of Engineer's permit. It is important to remember that all properties in these watersheds, as well as all lands in the state, are subject to state regulation through the State Water Resources Control Board and the Regional Water Quality Control Board in regards to the protection of water quality. Federal Clean Water Act and various state regulations prohibit the discharge of any pollutant (including silt) into any body of water designated to be "waters of the United States".

Although the landowner does own their entire parcel, some of their property rights were purchased in the 1950's by the Monterey County Water Conservation and Flood Control District (now MCWRA), so that the reservoir could be constructed. The property right held by MCWRA precludes the construction of any development in the easement which would prevent that land from being inundated by reservoir waters. Property owners must allow MCWRA staff entry to the floodage easement located on their property so that they can conduct reservoir maintenance.

San Antonio Reservoir and its 65 miles of shoreline offer year-round recreational activities for the public. Activities at the reservoir include: picnicking, camping, nature study, games at open playfields, fishing, and baseball, horse shoes, hiking, swimming, rafting, boating, sailing, waterskiing, jet-skiing, and sunbathing. Monterey County Parks Department also conducts special events such as the Wildflower Festival and Triathalons, and eagle watch boat tours (January through February).

Recreational facilities at San Antonio's south shore include 3 campground complexes that provide over 500 campsites. A museum, visitor center, park administration office, the Oak Room Group Building and Barbecue area, and over 26 miles of hiking and mountain bike trails can also be found in the south shore area. The South Shore Marina has boats, boat motors, jet skis, and houseboat rentals, as well as bait, tackle and ski accessories. A full service resort at the reservoir has cabin rentals, a store, restaurant, gas station, and marina with boat launch ramps, fish cleaning facilities, and docks. San Antonio's north shore provides opportunities associated with shoreline camping (over 4 miles), the McCandless activity area and outdoor amphitheater, and equestrian activities. The Monterey County Parks Department manages the boating and camping facilities along the lakefront, and a private management company manages the South Shore resort cabins, marina, boat rental, and snack bar facilities.

Los Padres National Forest lands are suitable for a variety of uses. General outdoor recreation activities available in the Nacitone watersheds component of Los Padres Unit includes: hunting, fishing, hiking and camping. Campgrounds with the Nacimiento River watershed include Nacimiento Camp, Ponderosa Camp, ABC and Redwood Spring. San Antonio River watershed campgrounds include Fresno and Carrizo Springs. These campgrounds have primitive facilities including vault toilets, picnic tables, fire rings and barbeque grills. The trail system within the Monterey District of the National Forest is extensive. Portions of the Forest within the Monterey District are designated Wilderness (Ventana Wilderness Area). Motorized vehicles and mountain

biking are not permitted in Wilderness. Additional uses within National Forest lands within the watersheds include watershed function, livestock grazing, and conservation education and stewardship (Part 1 Draft Land Management Plan, USFS, 2004).

During the 1990s, the Army delineated areas within FHL that were excess and deemed surplus. The National Park Service undertook a study to determine the suitability of those lands for inclusion in the National Park System. Though the Army rescinded the order delineating the excess land and subsequent action was not taken for determining National Park status, recent legislation gives the Department of Agriculture (US Forest Service) the right of first refusal on any properties that are determined to be excess to the Army's needs at any time in the future. Thus management for public use and recreation could occur in the future if FHL land is not needed for military use (FHL Special Resource Study, 2006).

The Nacimiento Fergusson Road makes the Nacimiento River one of the few streams in the mountain range easily accessible for recreation, including scenic driving, hiking, swimming, angling and camping. Two roadside Forest Service campgrounds provide good opportunities to explore the river.

Natural and Cultural Attributes

Because their upper watersheds are largely undisturbed, the Nacimiento and San Antonio Rivers are an important source of clean water for Monterey and San Luis Obispo residents, farmers and industries. Their highly productive ecology includes rich riparian habitat, the state's southernmost redwood forests, and the rare Santa Lucia fir (Cone Peak Research Natural Area). Much of the Santa Lucia Range is protected as wilderness which prohibits roads, mechanical/ motorized use and resource extraction. It also requires federal managers to actively preserve the free-flowing nature of the rivers and their unique qualities. There has been a call for additional protection provided by the National Wild and Scenic Rivers System (Ventana Wilderness Alliance, 2007).

The importance of preserving watershed function as source of clean water is further identified in *The Role of Headwater Streams in Downstream Water Quality.*

> *"The results reported here are consistent with the notion that pollutant sources and hydrological and biogeochemical processes in headwaters are physically and bio-chemically connected to the water-quality conditions in downstream waters of widely varying sizes, including navigable waters and their tributaries".*
>
> Alexander, et. al., 2007

Mission San Antonio de Padua, which was founded in 1771 by Father Junipero Serra, is one of the most significant cultural resources in the watersheds. (http://missiontour.org/sanantonio/index.htm) W. R. Hearst's ranch headquarters, the Milpitas Hacienda, situated on a 21-acre site known as "Hacienda Hill" is another significant cultural resource in the area. The architect was Julia Morgan, who designed Hearst Castle. It is located within FHL within walking distance of the Mission San Antonio (FHL Special Resource Study, 2006).

According to the Ventana Wilderness Alliance (VWA) and Friends of the River (FOR), approximately 8.6 miles of the San Antonio River and 9.0 miles of the Nacimiento River are considered suitable for designation as a Wild, Scenic or Recreational River as described in their 2007 pamphlet prepared for the Nacitone Watershed Committee based on heritage and cultural

resource values listed by the US Forest Service (Part 2 USFS, 2004). The VWA and the FOR are actively campaigning for their Ventana Wild and Scenic Rivers Proposal to be introduced into Congress. The Nacimiento and San Antonio Rivers are included in the proposal. Values considered on the Nacimiento River include recreation, wildlife and botanical. Cultural resources, scenery, wildlife, geology and ecology are identified values on the San Antonio. The Forest Service has analyzed these rivers for Wild and Scenic status. They were not recommended as they did not qualify for Wild and Scenic status based on USFS evaluation criteria (FEIS Los Padres National Forest Land and Resource Management Plan, 2005).

The Los Padres Forest Plan established the Milpitas Special Interest Area (SIA), which encompasses 9,948 acres of the upper San Antonio River watershed including both the main stem and North Fork and several tributaries. The area was designated due to its pre-historic and historic cultural resources and ethno-graphic landscape.

The Valley Oak Research Natural Area (108 acres) was also proposed and is within the boundaries of the SIA. It is one of the last remaining stands of Valley Oak savannah on public lands in California. The U.S. Forest Service and the Ventana Wilderness Alliance are collaborating in the development of management plans for these areas.

FHL Land Use

FHL is evenly split between the two watersheds with each comprising approximately 50% of the installation area. Approximately 36% of the watersheds, as measured from headwaters to the confluence of the Salinas River, lie on Fort Hunter Liggett (Ken Ekelund, personal communication, 2007).

Fort Hunter Liggett is an Army Reserve installation and has approximately 150,000 acres of maneuver area suited for vehicle and non-vehicular military training. Fort Hunter Liggett hosts training by all types of Army units as well as units from the Navy, Marines and Air Force and has been designated as a Combat Support Training Center (CSTC). Fort Hunter Liggett has a wide variety of training land available, and includes shrub lands, grasslands, and forests in plains and mountainous settings (DP EIS, 2007).

FHL is currently under federal ownership, managed as part of the Western Training Center for the US Army Reserve. Military bases are included in the Public/Quasi-public land use category in the Monterey County General Plan (Monterey County 1995 and 2004). As federal land, FHL is not subject to local zoning (FHL Special Resource Study, 2006).

The installation provides large expanses of land required for military training. Some other land uses may be allowed if they do not conflict with the designated and primary land use of military training and are compatible with responsible natural resource stewardship. The many vegetation communities and water resources on FHL are managed to sustain current and future military training through responsible land stewardship and environmental compliance with federal laws such as the Sikes Act, Endangered Species Act, Bald and Golden Eagle Protection Act, Migratory Bird Protection Act and the National Environmental Policy Act. Army Regulation 200-1 guides the implementation of land stewardship and environmental compliance with all mission related activities on the installation. Fort Hunter Liggett Regulation 200-3 requires environmental review of all activities that may affect natural and cultural resources (2007 Annual Report, February 2008).

Military training on FHL that relates to natural resources includes live-fire exercises, field maneuvers, fixed-range firing, aviation, weapons testing, and use of the tank trail that runs

between FHL and Camp Roberts. Operations and maintenance activities that relate to natural resources include road maintenance, fire protection and prescribed burning, pest control, and new construction and ranges (2007 Annual Report, February 2008).

Developed areas of FHL include about 152 ha (H" 376 acres; 0.23%) of the FHL land area. Historic disturbances from training, FHL activities, and pre-military activities are evident in some areas and include the following:

- Presence of roads, facilities, and water developments and impoundments;
- Remnants of historic established bivouac sites and associated use;
- Erosion primarily associated with roads;
- Historically cultivated areas that may alter plant composition;
- Intentional reduction in oak stands in isolated areas during the 1950s;
- Unintentional loss of oak trees in isolated areas, primarily from fires;
- Wetlands created by excavations conducted for concealment (*i.e.* tank hull-down positions);
- Evidence of compacted soils at the Multi-Purpose Range Complex as well as in training areas 2, 3, 12, 15, and 20;
- Evidence of military maneuvers in the Nacimiento River Valley;
- Presence and spread of the noxious weed yellow star-thistle; and
- Conversion of chaparral to grassland and scrub in isolated areas from repeated burning. (FHL INRMP, 2004)

In August 2007, the Army released the Draft Programmatic Environmental Impact Statement (DP EIS) for Army Growth and Force Structure Realignment. A growth scenario for FHL, which may have also affected Camp Roberts, was analyzed for impacts to the environment. Pertinent concerns to this planning effort included water quality, water supply, point and nonpoint sources of pollution, population, and vegetation and habitat. At this writing in September 2008, the Army has elected not to move forward with large-scale FHL expansion but may instead expand on a smaller scale.

There are several non-military in-holdings within the installation: property within the old town of Jolon and the Mission San Antonio de Padua. In-holdings at Jolon include the Tidball Store structure, Saint Luke's Episcopal Church, and Saint Luke's Cemetery. The Tidball Store structure is owned by Monterey County Parks Department, but approximately 1 acre of land under and adjacent to the store is presently owned by the Army and was part of the former excess BRAC property. Mission San Antonio de Padua is on the north side of the cantonment area (which supports urban and administrative functions). The site occupies approximately 85 acres and includes the Mission, residences for clergy, a cemetery, and outbuildings. The Monterey Diocese of the Catholic Church owns the Mission (FHL Special Resource Study, 2006).

Non-military uses on military land include hunting and fishing, non-military housing rentals, and visitation to the non-military in-holdings. FHL is rich in cultural resources including recorded archeological sites, which is on the National Register, and the historic trails of the early Spanish explorers, Portola, Serra and De Anza.

E. Reservoir Features and Management

The MCWRA has licenses, permits and orders from the State Water Resources Control Board to store and/or divert water from the Nacimiento, San Antonio and Salinas Rivers. Those

rights recognize dam storage capacities of 377,900 and 350,000 acre-feet respectively in Nacimiento and San Antonio Reservoirs. Those rights also recognize the agreement between MCWRA and the San Luis Obispo District giving the latter the right to use 17,500 acre-feet annually from Nacimiento Reservoir, less than five percent of that reservoir's storage capacity. A total of 1,750 acre-feet annually is allocated by San Luis Obispo County for use around the reservoir. Additionally, MCWRA has an agreement with the Nacimiento Water Company to allow the Company to use up to 600 acre-feet annually. The Nacimiento Water Project will utilize the balance of the County's allocation in the near future.

San Antonio Reservoir

The San Antonio Reservoir, located in southern Monterey County on the San Antonio River, began operations in 1967. San Antonio Dam is five miles west of Bradley and three miles north of Nacimiento Dam. At full pool, the reservoir has a volume of 335,000 acre-feet, surface elevation of 780 feet, and a maximum depth of 180 feet. There is 65 miles of shoreline. San Antonio Reservoir yields on average about 13% of the total water in the Salinas River System. Average annual release is about 63,000 acre-feet but has been as high as 310,000 acre-feet (SVWP EIR, April 2002).

San Antonio Dam

This earth-fill dam has a height of 201 feet above the streambed and a crest length of 1,433 feet. The crest of the dam is 802 feet above mean sea level (msl) with a spillway crest elevation of 780 feet; the spillway has the capacity to pass a maximum flow of 35,400 cfs. The dam has an outlet works consisting of an 84-inch diameter, 1,085 foot- long steel conduit located near the center of the Dam. The conduit leads through the dam embankment from a small intake structure to an outlet structure, which contains a Howell-Bunger type valve enclosed in a concrete house. The outlet has a maximum capacity of 2,200 cfs when the reservoir elevation is 780 feet. The log boom on the San Antonio Reservoir is intended to prevent boats and debris from becoming trapped in the dam spillway; it is approximately 250 feet in length.

San Antonio Release Information

The MCWRA reports that variable releases from San Antonio Reservoir are made to augment releases made from Nacimiento Reservoir. Together, those releases provide river flow to the Agency's Target Area for end of flow, at approximately River Mile 17 to River Mile 13. Since its construction, the water level in San Antonio Reservoir has only reached the spillway once, in 2006.

Nacimiento Reservoir

Nacimiento Reservoir is located on the Nacimiento River about 18 miles northwest of Paso Robles in San Luis Obispo County. It was created by the construction of the Nacimiento Dam, completed in 1957. The reservoir's irregular shoreline when full comprises about 165 miles. At maximum pool, the reservoir's storage capacity is 377,900 acre-feet with a surface elevation of 800 feet and a surface area of 5,400 acres. The maximum depth of the reservoir is 175 feet, with annual water surface elevations usually ranging from 30 to 70 feet. Nacimiento Reservoir yields on average about 62% of the total water in the Salinas River System.

The key elevations of Nacimiento Reservoir, depicted in the chart below, were compiled by the Monterey County Water Resources Agency and provided to attendees of the Public Advisory Meeting on September 19, 2007. The information provides specific operational components of the reservoir and dam that can occur at various water elevations. There is no corresponding key elevation chart for San Antonio Reservoir.

ELEVATION (feet)	STORAGE (acre-feet)	DESCRIPTION
670.0	10,300	Minimum elevation water can be released from the Low Level Outlet Works, physical minimum pool; lowest possible reservoir elevation water can flow from by gravity.
687.8	22,300	Minimum pool, lowest reservoir elevation at which water is available to the MCWRA for release. The balance remaining up to a maximum of 17,500 acre-feet is reserved for use by the San Luis Obispo County Flood Control and Water Conservation District pursuant to its agreement with MCWRA.
730.0	92,150	Elevation above which most boat ramps around the reservoir are operational
748.0	144,200	Elevation defined in Memorandum of Agreement (MOA) with Fish & Game, below which drought conditions are defined to exist, and the minimum release can be reduced from 25 cfs to 10 cfs
755.0	168,350	Minimum elevation at which water can be released from the High Level Gates
766.5	212,700	Both launch ramps at Nacimiento Reservoir are operational in a range of two to three feet above this elevation
777.3	260,000	Top of the Water Conservation Pool, bottom of the MCWRA Flood Pool
782.5	285,050	Bottom of the Federal Energy Regulatory Commission (FERC) Flood Pool, minimum water surface elevation during January and February without maximum releases being made for post spill way modification construction 2008/2009.
800.0	377,900	Elevation at which Nacimiento Reservoir is considered full, top of spillway, maximum physical permanent water elevation

Figure 27. Key Elevations of Nacimiento Reservoir

Reservoir Infrastructure

(Sources include NACIMIENTO DAM OPERATION POLICY and SAN ANTONIO DAM OPERATION POLICY and "Survey of the San Antonio and Nacimiento Dams and Reservoirs" Prepared by Thomas L. Perry, May 10, 2001 for the Monterey County Water Resources Agency Board of Directors)

Nacimiento Dam

Completed in 1957, this earth-fill dam has a height of 215 feet above the streambed and a crest length of 1,650 feet. The crest length is defined as the length along the top of a dam. The crest elevation is 825′ above mean sea level (msl) with a spillway elevation of 800′. The spillway has the capacity to pass flows up to 70,000 cfs. The High Level Outlet Works (HLOW) is composed of twin 8′ x 8′ square steel slide gates and cast concrete tunnels located under the center of the spillway at an elevation of 755′ (NGVD 1929 datum for all elevations based on this datum).

The HLOW has a maximum capacity of 5,500 cfs when the reservoir elevation is 800′. The Low Level Outlet Works (LLOW) is a 53" diameter pipe located near the southern side of the Dam. The inlet to the LLOW consists of three 42" butterfly valves set in a concrete structure at an elevation of 670′. Releases from the LLOW can be made from either a manifold of six 24" manually operated valves or the Hydroelectric Power Plant. The LLOW has a maximum capacity of 460 cfs when the reservoir elevation is 800′.

An existing 1,900-foot Log Boom on the Nacimiento Reservoir is intended to prevent boats and debris from becoming trapped in the intakes or the spillway. A new log boom, 2413 feet in length, will be installed in 2008 to accommodate a slightly larger exclusion area that will also include the Nacimiento Water Project intake structure.

Floodage Easement

MCWRA holds a "Floodage Easement" on those portions of all private land around the Nacimiento Reservoir, therefore MCWRA has an easement to flood up to 825′ mean sea level and provide MCWRA staff access to private property to perform routine reservoir maintenance.

Nacimiento Release Information

Releases at present range between 120,000-acre-feet and 180,000-acre-feet per year. Releases are utilized for groundwater recharge, reduction of seawater intrusion, and steelhead habitat enhancement. The actual amount released varies with weather conditions groundwater elevations, pumping, system hydrology, and other factors.. Whenever the reservoir level rises above 782.5, the high level gates located on the spillway have been used to release water.

The low level outlet is the primary outlet for releases. The capacity of the outlet is approximately 400 cubic feet per second (cfs), when releases flow through the hydroelectric power plant. At water surface elevation 800 feet, maximum capacity is about 460 cfs and at elevation 700 feet, maximum capacity is about 390 cfs.

When the need for releases exceeds the 400 cfs capacity of the low level outlet, releases are made from the high level gates. When the elevation is below 755 feet, releases are not possible from the high level gates and releases are then made from San Antonio Reservoir, if possible and necessary.

Combined Reservoir Features

Nacimiento and San Antonio Reservoirs have water conservation pools that are relatively similar in size: Nacimiento – 245,000 acre-feet (AF) and San Antonio – 282,000 AF. While they are similar in storage capacity, the rate at which they fill is very different. The fill rate, or inflow into the respective reservoir depends on a number of variables, including but not limited to orientation of watershed, amount of rainfall, geology, and weather. Nacimiento Reservoir receives a greater amount of inflow than San Antonio, therefore in an average year; more water is released from Nacimiento than San Antonio. This way, there is room in Nacimiento for the next year's storms. In addition, because there is a power plant below Nacimiento Dam, there are federal limits on how much water can be stored behind the dam (this maximum elevation changes throughout the year, depending on the month). This maximum elevation, or Rule Curve, is in place for the protection of the dam itself, as well as the power plant below, and through application, minimizes the occurrences of reservoir spill, thus saving the captured

water for other beneficial uses. The minimum storage levels or minimum pools of the reservoirs are 22,300 AF for Nacimiento and 23,000 AF for San Antonio. The difference between full capacity and the conservation and minimum pools on each reservoir is called the flood pool, which is 110,600 AF for Nacimiento and 30,000 AF for San Antonio (Rob Johnson, 2008).

Reservoir Management

The Reservoir Release Schedule is a guide to assist the MCWRA in making water conservation releases from both Nacimiento and San Antonio Dams. Prior to cessation of natural flow in the Salinas River each year, MCWRA staff drafts a Preliminary Reservoir Release Schedule which considers various factors contained in the Dams' Operations Policies. The schedule considers the following priorities: 1) provide maximum groundwater recharge for the entire Salinas Valley, 2) operate the reservoirs to provide recreation benefits, 3) provide for the needs of fish and wildlife, and 4) waste as little water as possible to evaporation or to the ocean. Each spring, usually at its annual April meeting, the Reservoir Operations Committee reviews the Preliminary Release Schedule and recommends a Proposed Release Schedule to the Board of Directors for adoption. The Reservoir Operations Committee reviews the adopted Release Schedule monthly and makes recommendations or changes as needed.

Sediment Supply and Transport

SH+G conducted a preliminary sediment budget for the watersheds to provide insight into the mechanisms and rates for sediment delivery to the reservoirs. This can, in turn, provide watershed stakeholders with information to assist future management scenarios regarding sediment delivery and runoff and for the MCWRA to consider the life spans of the reservoirs. The technical content of the sediment budget is contained in the SH+G technical memorandum (Appendix D). The following are the observations SH+G made regarding the sediment budget.

> *The difference in rates of sediment transport between the two watersheds is striking. San Antonio was estimated to have twice the rate, per unit area, of sediment transport than Nacimiento. Although a complete assessment of sources of sediment in the watershed and a complete accounting of sediment delivery through the use of a sediment budget is out of the scope of this project, some preliminary observation were made using aerial photos and a general understanding of the geology and geomorphology of the watersheds.*
>
> *Landscape Morphology: The morphology of the two watersheds are completely different. The Nacimiento watershed abuts the divide between the Big Sur Coast and the Salinas Valley, reaches higher elevations in the upper watershed, and generally has higher precipitation. Consequently, the Nacimiento watershed has a more dense vegetation canopy dominated by oak. The lowland valleys are generally narrow and more confined. Conversely, the San Antonio Creek watershed is dryer, and has less vegetation. The lowland areas are dominated by a large alluvial plain known as Lockwood Valley and the San Antonio River valley is less confined.*
>
> *Sediment Supply: The quantity of sediment passing a particular point in the watershed is dependent upon the supply of sediment from the adjacent landscape to the channel. In the case of San Antonio, the readily available supply of sediment on the adjacent landscape far exceeds the quantity of sediment that is available in Nacimiento. Most of the sediment available for erosion in Nacimiento consists of recently weather colluvial*

material and a narrow band of alluvial material within the river valleys. In San Antonio, Lockwood Valley provides a huge source of highly erodible material that consists of unconsolidated alluvial fan deposits emanating from the mountains from the north and east. In addition, there are extensive, recent alluvial deposits within the San Antonio River floodplain that are easily reactivated during a high flow event or as a result of bank erosion.

Land Use: Land uses in the San Antonio watershed tend to be higher intensity and more prone to create conditions that increase sediment supply to channels. Agriculture, grazing, and residential development within Lockwood Valley all provide a mechanism for sediment delivery that isn't as prevalent in the Nacimiento watershed.

Under natural conditions, assuming anthropogenic inputs were not a factor; the San Antonio River would have a higher sediment load than the Nacimiento River. The geologic differences, morphology of the basin, and a good supply of highly erodible material make the watershed more productive for sediment. The most significant sources of sediment within both watersheds appear to be reactivation of previously deposited alluvial materials and fire-dependent influxes of sediment from the upper watershed. San Antonio also has a significant land use component that adds additional sediment to the channels, although calculating the exact contribution from these sources would require a thorough evaluation.

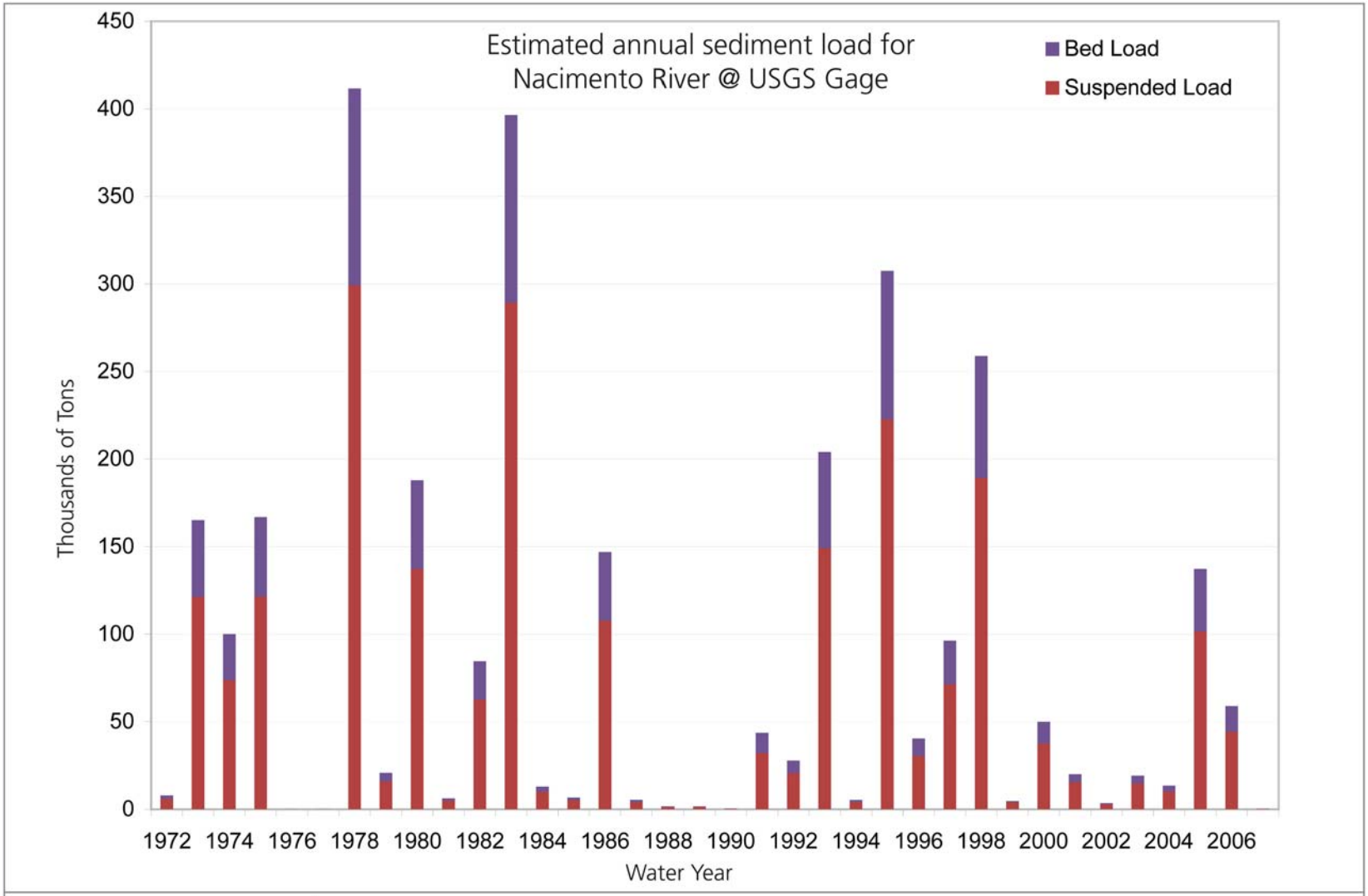

SWANSON HYDROLOGY + GEOMORPHOLOGY
500 Seabright Ave, Suite 202 Santa Cruz, CA 95062
PH 831.427.0288 FX 831.427.0472

Estimated annual suspended sediment and bed load for the Nacimiento River. Annual sediment loads were determined by applying the suspended and bed load rating curves to the mean daily flow data for gage 11148900. Consequently, these results may underestimate total sediment load since they do not account for peak discharges.

Figure 28. Estimated Annual Sediment Load for Nacimiento and San Antonio Rivers

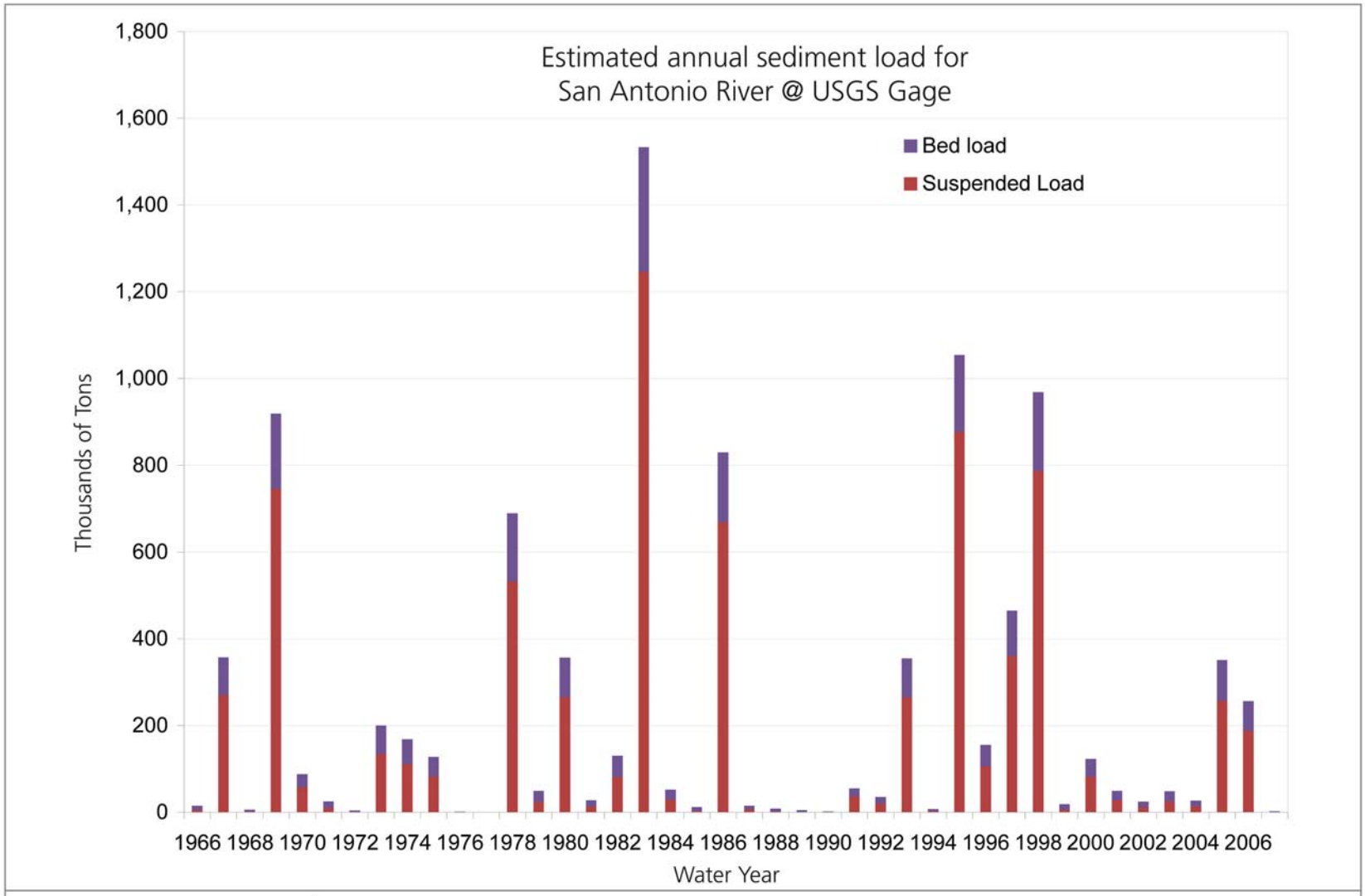

SWANSON HYDROLOGY + GEOMORPHOLOGY
500 Seabright Ave, Suite 202 Santa Cruz, CA 95062
PH 831.427.0288 FX 831.427.0472

Estimated annual suspended sediment and bed load for the San Antonio River. Annual sediment loads were determined by applying the suspended and bed load rating curves to the mean daily flow data for gage 11149900. Consequently, these results may underestimate total sediment load since they do not account for peak discharges.

Figure 28. Estimated Annual Sediment Load for Nacimiento and San Antonio Rivers

F. Demographics

The primary population centers in the watersheds are Heritage Ranch and Oak Shores, Lockwood and the military installations. Prior to the creation of Nacimiento Reservoir, the population of the planning area was widely dispersed, with most residing and employed on farms and ranches. However, a special census in 1976 indicated that less than 1% of household heads in the Nacimiento Planning Area were employed in agriculture. The permanent population of the planning area was 271 in 1976, while housing units totaled 632 (based on pre-1990 planning area boundaries). Though future residential development is anticipated to continue to be oriented primarily toward second homes, a modest continuing increase is expected in permanent residents; primarily the retired. Use of homes in the area for leisure activity is reflected in the 80% residential vacancy rate during the winter months (Nacimiento Area Plan, 2003). However, this demographic is likely outdated given that it was originally cited in the 1973 version of the Nacimiento Area Plan. The Steering Committee has elected to collect updated information via the Heritage Ranch and Oak Shores Homeowner's Association as well as CSD water delivery records.

San Antonio River Watershed

The population of South County has increased significantly since 1960, when the population was only 1,702. The population had grown to 2,989 by 1970, an increase of 75.6%. In 1980 the number of South County residents was 3,597, an increase of 20.3% in ten years. The Planning Area's 20% increase in population ranks seventh among Monterey County's eight planning areas (South County Area Plan of the Monterey County General Plan, 1987 with updates). The Nacitone Watersheds comprise 33% of the South County Planning Area. This planning area includes the communities of Lockwood, Bradley, Parkfield and San Ardo; although only Lockwood is located inside the Nacitone area.

Population Change, 1960 – 1980

Location	1960 Population	1970 Population	% Change 1960-1970	1980 Population	% Change 1970-1980
South County Planning Area	1,702	2,989	75.6	3,597	20.3
Monterey County	198,351	247,450	24.8	290,444	17.4

Sources: 1960, 1970 and 1980 U.S. Census of Population

Figure 28a. 20-Year Population Changes

South County is the largest planning area in Monterey County and has the lowest population density – 2.8 persons per square mile in 1980, compared with 87 persons per square mile countywide. It should be noted that 68% of the South County Planning Area is devoted to agriculture and 28% of the Planning Area is under public land ownership. Thus, the density throughout South County is not uniform. South County's ethnic composition is very close to that countywide. South County has a slightly higher proportion of Caucasians and persons of Spanish origin and a lower proportion of Asians. South County has a higher percentage of teens and young adults between 15 and 24 years of age and a lower percentage of children, adults, and elderly. The age structure reflects the presence of Fort Hunter Liggett, where 60% of the population is between the ages of 18 and 24. Without Fort Hunter Liggett, South County's age composition is very close to that of the County. The South County Planning area encompasses almost 40% of the area of the entire county.

TABLE A POPULATION PROJECTIONS NACIMIENTO PLANNING AREA		
Year	Population of Planning Area	Percentage of Total County Population
1989	1,918	.90
1990	2,076	.93
1995	2,618	1.00
2000	3,186	1.07

Source: Nacimiento Area Plan (2003)

Figure 29. Population Projections for the Nacimiento Planning Area 1989-2000

Figure 29 (Table A) contains population projections for the Nacimiento Planning Area. Due to the small number of people and the seasonal nature of the population, individual population projections were not included in the 2003 update of the Nacimiento Area Plan for either the Oak Shores or Heritage Village areas. For comparison, Figure 30 Table B contains the projected population absorption capacity which is the potential planning area population resulting from unconstrained growth and fully-occupied development to the maximum permitted in each land use category.

It is not possible to accurately project future population growth for the Nacimiento Planning Area because of its small population and the seasonal or recreational nature of the population. Future growth in the area is based primarily on migration, which bears little relationship to current local economic conditions. Figure 33 contains population projections based on 4%, 8% and 10% annual growth rates. The 4% projection is a simple extrapolation of the 1970-1979 average growth rates. This is nearly double the total growth projection of 2% for the entire county between 1980 and 1985. The 10% growth rate is a high figure based on sustained growth patterns similar to the late 1979's. The absorption capacity figures in Table B are estimates based on permanent occupancy of the residential units in the planning area. However, since the planning area is also a major recreational attraction, the absorption capacity could be increased by as many as 30,000 under peak weekend conditions (estimate from previous Lake Nacimiento-San Antonio General Plan). This could result in as many as 55,000 to 60,000 people being in the planning area under maximum peak conditions.

TABLE B ABSORBTION CAPACITY NACIMIENTO PLANNING AREA				
Land Use Categories	Rural Area	Heritage Village	Oak Shores	Total
Agriculture	1,036	-	-	1,036
Rural Lands	900		-	900
Residential Rural	1,087	705	-	1,792
Residential Suburban	-	-	-	
Residential Single Family	-	16,477	5,810	22,287
Residential Multi Family	-	11,213	576	11,798
ABSORPTION CAPACITY	3,023	28,395	6,386	37,813
Existing Population 1989	*	*	*	1,918
POTENTIAL ADDED POPULATION	-	-	-	35,895

Source: Nacimiento Area Plan, (2003)

Figure 30. Absorption Capacity of the Nacimiento Planning Area

	1990	2005	New Units	% increase	Average Annual % increase
Heritage Ranch	1047	1425	378	36.10	2.08
Rural Nacimiento	761	861	100	13.14	0.83

Source: Annual Resource Summary Report, SLO County, 2006

Figure 31. Dwelling units in Nacimiento Planning Area

Population in households							
Year	2000	2005	2010	2015	2020	2025	2030
Nacimiento Planning area	2778	3147	3357	3563	3782	4015	4261

Source: 2005 Urban Water Management Plan Central Coast Water Authority

Figure 32. Projection of population in households within Nacimiento Planning Area

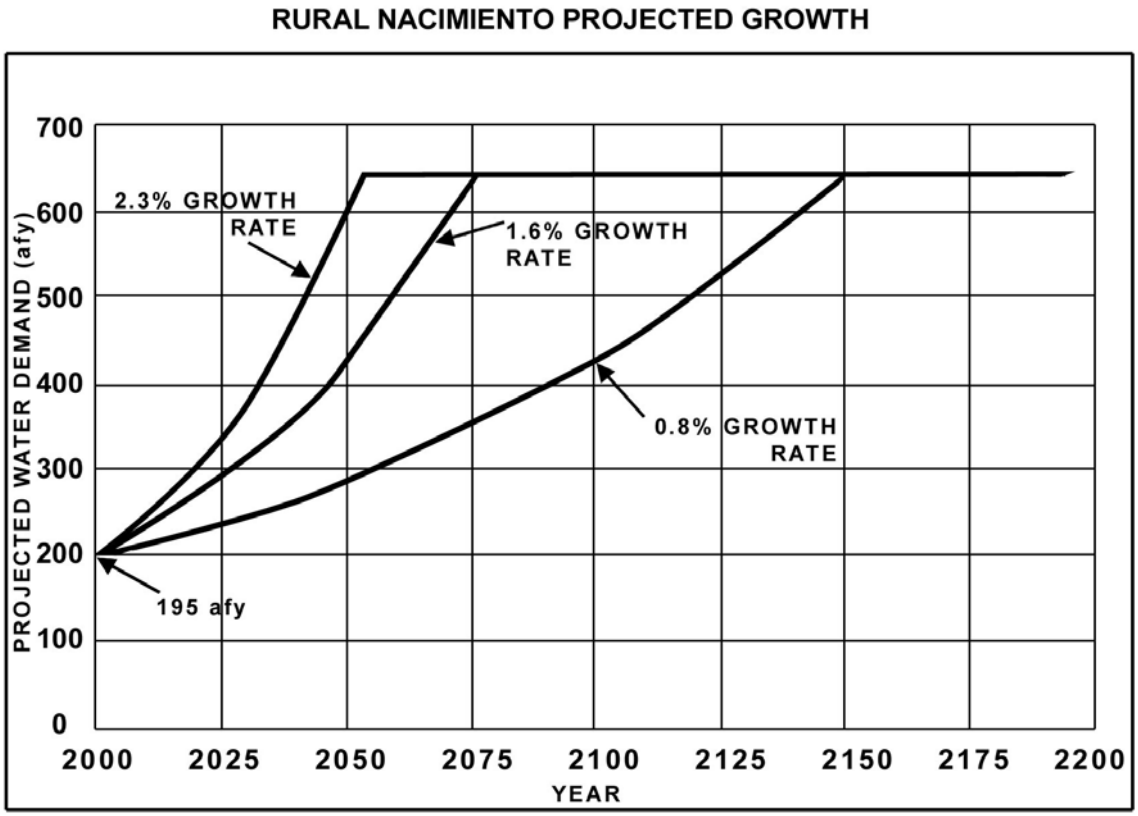

Source: Nacimiento Lake Lakeside User Set Aside, 2004

Figure 33. Projected Growth for Rural Nacimiento 2000-2200

Oak Shores Population

The current County Service Area 7A (CSA-7) includes the community of Oak Shores which is located on the north shore of Nacimiento Reservoir within the Nacimiento Planning Area. The County Land Use Element, the Nacimiento Area Plan, and the standards in Chapter 22.102 serve as the specific plan for the development of Oak Shores. The 1974 Oak Shores Specific Plan originally provided for 4,000 units for the entire community. Since then, the Land Use Element has significantly reduced anticipated land uses. The reductions in development potential are primarily adjustments in the village boundary to exclude northern portions of the Lynch

Flat area. The resultant maximum allowable number of dwelling units within the Oak Shores village reserve line is 1,786, including RV sites. The village is 1,576 acres in area. Just to the north of the village reserve line is the Tierra Redonda Mountain sensitive resource area (SRA) which encompasses approximately 1,300 acres with 320 acres under Bureau of Land Management ownership. Oak Shores has been envisioned as a resort community of vacation and retirement homes with various recreational uses (Oak Shores EIR, 2007).

Development Entity	Number of Units	Cumulative Units
Existing CSA-7A Dwellings*	583	583
Future CSA-7A Dwellings	269	852
Davis/King Tract 2162 Phase 1	60	912
Davis/King Tract 2162 Phase 2-6	285	**1197**
Bean/Lynch Canyon Properties (Hughes) Tract 2520	307	1504
Munari	134	1638
Vaughn/Taylor/Crawford	25	1663
Lynch Canyon Properties (Hughes)	50	**1713**

* *taken from Garing Taylor & Assoc. as of 2005*

Source: Oak Shores EIR, 2007

Figure 34. Proposed Oak Shores Development

Both Watersheds

The following visitor numbers do not reflect people entering the reservoirs through private communities.

Visitor Numbers for San Antonio Reservoir

Based on County attendance data for San Antonio Reservoir, the following counties account for nearly 70% of the visitation to the reservoir: Monterey, San Luis Obispo, San Benito, and Santa Barbara Counties. The population of the market area as of 2006 was 1.1 million people. Total annual visitation is estimated to be about 380,000 persons (visitor days) (RFI #11047 Concessionaire Lake San Antonio and Lake Nacimiento, 2007).

Visitor Numbers for North Shore San Antonio

Peak visitor months on the reservoir are June, July and August with visitor numbers for 2006/2007 ranging from a high on July 4th of around 100,000 to a low of 35,000 at the beginning and end of the summer season. Peak visitor days are July 4th, Labor Day and Memorial Day with July 4th and Memorial Day often having 100,000 to 140,000 visitors. Over the course of the last three years visitor attendance has increased with the year 2006/2007 seeing a total of approximately 2,708,000 visitors.

Visitor Numbers for Nacimiento Reservoir

Based on records of the most recent lessee, Lake Nacimiento Resorts, annual attendance at Nacimiento Reservoir was estimated at approximately 180,000 persons. The market area for the reservoir that accounts for about 70% of visitation includes the trade area for San Antonio Reservoir and the counties of Fresno, Kings, Tulare, Kern, Los Angeles (may account for approximately 30%) and Ventura.

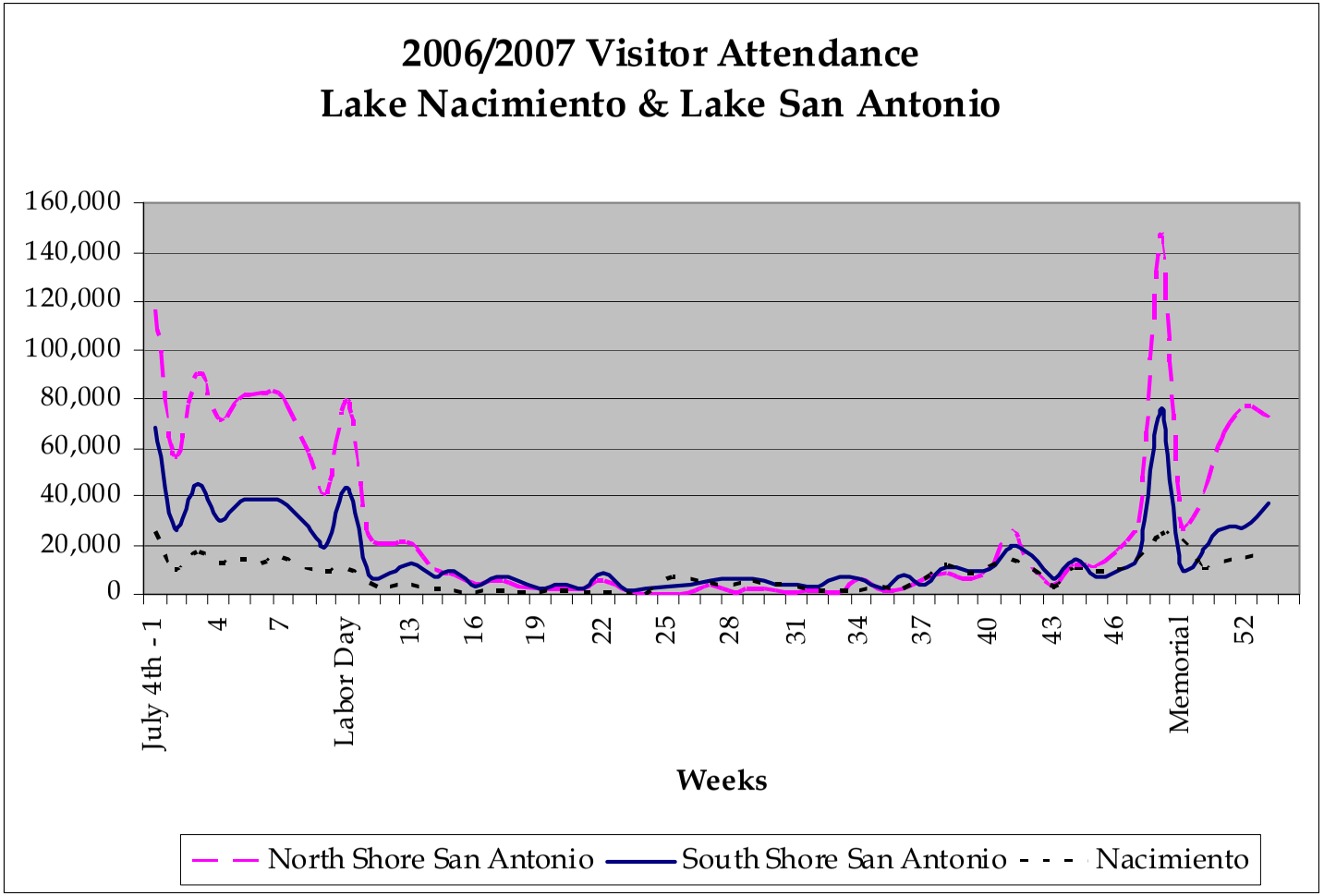

Figure 35. 2006/2007 Visitor Attendance to Nacimiento and San Antonio Reservoirs

(This page intentionally left blank)

PART 3
Watershed Strategy

A. From Issues to Recommendations:

The issue statements developed by the Steering Committee emerged over a series of discussions and activities progressing from one-word statements of a concern to complex, underlying issues and ultimately into reasoned statements of the core issues as they relate to these watersheds. These issue statements in turn enabled the Steering Committee to set goals, objectives and implementation measures that reflect upon the issues. The issues are not presented in priority order.

ISSUE 1 – Recreation
ISSUE 2 – Gaps in Knowledge: Monitoring and Information Needs
ISSUE 3 – Preventing Pollution from Point and Nonpoint Sources
ISSUE 4 – The Role of Agriculture
ISSUE 5 – Fire in the Watersheds
ISSUE 6 – Taking Enforcement Action
ISSUE 7 – Communication & Coordination
ISSUE 8 – Watershed Health: Plants & Animals
ISSUE 9 – Roads and Culverts
ISSUE 10 – Education and Outreach Needs
ISSUE 11 – Invasive Species

As Steering Committee members learned more about their watersheds and read through the inventory of source documents compiled into the Watershed Resources Inventory (WRI) they began to realize that there are few documented water quality problems in these watersheds. Some Steering Committee members think that recommendations need to be based upon data documenting existing problems in these watersheds. Others think that problems may exist that have not been documented and that potential problems should be addressed in the recommendations of this Plan.

This discussion led to an agreement that baseline information is needed to improve our ability to understand current water quality and prevent problems.

Recommendations (implementations) you will find in this part of the Nacitone Watersheds Management Plan are designed to protect water quality and watershed uses by:

A. Sharing and coordinating the use of existing information

B. Engaging watershed residents, project proponents, private contractors, environmental groups, appropriate agencies, and others to learn about and protect watershed uses on a voluntary basis and in light of existing laws.

C. Gathering, sharing, and coordinating additional information and set water quality baselines to track change over time where possible.

An over-arching recommendation of the Plan is to seek funding for and contract with a watershed coordinator/grant writer who would develop grant proposals to conduct some of the implementations in the Plan and act as staff for the Nacitone Steering Commmittee.

IMPORTANT NOTE:

The remainder of this Chapter is broken into ISSUES each starting with a statement. The issue statements are not all science-based but were identified and described by stakeholders and refined by the Steering Committee. The issue statements reflect the opinions of watershed users and are a result of multiple community meetings, Steering Committee discussions, and learning about the watersheds.

The basis of all issue statements is the use of sound reasoning to promote voluntary protection of water quality and watershed uses in accordance with the Vision Statement adopted by the Steering Committee.

For each ISSUE, background information is provided under STATUS AND REFERENCES where there are references to the *Watershed Resources Inventory* and the *Analysis and Appendices.* These documents can be found at www.Nacitonewater.org website or upon request. *Goals, Objectives, and Implementations* are then described for each ISSUE.

Many of the recommendations (implementations) in this chapter are meant to provide support for future potential funding should a group or entity desire to carry out the recommendation. There is no intention to create additional costs for watershed residents or others. Potential partners for implementations are suggestions only and intended to supply ideas for future groups to consider in carrying out recommendations.

The implementation recommendations will need to be tracked and updated, beyond the timeframe of developing the Final Plan (October 2008), as new information is made available. There may be success stories to tell and lessons learned from attempting some of these implementation measures. There may also be new measures recommended or reasons for a shift in the order of priorities. A table of the recommendation and indicators of progress toward fulfilling the recommendations is included in Appendix I.

B. Prioritizing Recommendations

The ranking criteria below were used by the Steering Committee and Technical Advisory Committee to prioritize recommended implementation actions.

Ranking criteria are designed to address recommendations that are not science-based but reflect a community observation or concern. The word "project" used below is for simplicity although many of our recommendations are not actual, on-the-ground projects. This list is not in any specific order.

1. Cost / Benefit Analysis: projects that are the least costly way to provide benefits are preferred under this criterion.

2. Types of Benefits: projects that provide these benefits are preferred under this criterion.

- Direct water quality benefit: (directly reduces the amount of a pollutant entering waterways)
- Community economic benefit: (protects property values, protects livelihood within the watershed,
- Social capital benefit: (Builds trust, Develops partnerships, Improves communication/coordination, Engages and educates watershed users)
- Environmental / Watershed function benefit: (erosion control, fire prevention/ management, flood control, water quality protection / improvement)

3. Long-lasting Benefits: projects with the ability to protect and ensure benefits over a long term are preferred under this criterion.

4. Likelihood of Success: projects that have less risk or uncertainty (i.e.: political, technical) are preferred under this criterion.
This criterion considers factors affecting the likely success of a project.
Among the criteria to consider is the ability to monitor and evaluate any proposed project's success as well as the ability to correct problems that arise during implementation and the qualifications of companies or individuals expected to implement the project. Also under this criterion could be readiness timing, landowner willingness, access and engineering.

5. Technical or Scientific basis: projects based on solid, scientific evidence are preferred under this criterion. This criterion assesses the type of information upon which the project proposal is based. **(NOTE: scientific evidence can include 1) studies conducted in other places which provide lessons learned, mistakes, successes, and 2) measures or "indicators" other than water quality data.)**

6. Addressing Watershed Issues: projects that address an identified watershed issue are preferred under this criterion.
As the critical issues have not been ranked in terms of priority in the plan, this criterion must consider the extent to which an implementation measure or project resolves or addresses the issue.

7. Strengthens existing efforts: projects linked to existing efforts in a positive way, giving them strength and potentially a higher likelihood of success is preferred under this criterion.

8. Knowledge gap: projects that will fill an identified gap in knowledge for these watersheds are preferred under this criterion.

9. Opportunities for cost sharing: projects for which there are good opportunities for partnerships across entities that could leverage the resources needed and/or to solicit funds (grant writing etc.) to conduct the project.

Prioritization of Plan implementations (recommended actions)

Top priorities that emerged from the stakeholder process :	
Short term (1-2 years)	**Long term (5-10 years)**
Continue the Nacitone Watersheds Steering Committee by seeking funding and contracting with a watershed coordinator/grant writer.	
Support the development and maintenance of Round Tables with an Inter-county Task Force on land use and water resources planning as the top priority Round Table (Issue 7)	
Monterey County, San Luis Obispo County and resident associations should work together to develop and implement programs to control invasive species. (Issue 11, Implementations 1C)	
Water quality monitoring, interpretation, and coordination across multiple entities. Continue existing water quality monitoring. In addition, establish a comprehensive water quality monitoring program with uniform collection, analysis and reporting protocols across pertinent jurisdictions for technical and public sector use. As part of this information gathering, encourage EPA to conduct a lake bottom sediment study of Nacimiento reservoir to better understand mercury contamination.	Support for SLO County to eliminate the risk to water quality of the Oak Shores Interceptor line at Nacimiento reservoir.
Support the work of existing Local Fire Safe Councils (Issue 5, Implementation 1B)	
Conduct road system survey to prioritize needs for erosion control. Include a focused survey on the Tank Road in coordination with military, etc. (Issue 9, Implementations 1B and 2B)	Implement proposed upgrades to the Tank Road and others within these watersheds in coordination with others. (Issue 9, Implementation 2B)
Collaborate on the design and implementation of educational stewardship campaigns targeting watershed residents and visitors with customized messages such as “Be A Watershed Citizen.”	

C. Watershed Issues, Goals and recommendations

ISSUE 1 – Recreation

ISSUE:

As a land use, recreation has, for many years, been an important factor in the watersheds. Recreation contributes to property values, community economics, and allows residents, as well as thousands of visitors each year, to enjoy the varied beauty of the watersheds. Nacimiento and San Antonio Reservoirs offer a variety of water activities including boating, swimming, fishing, waterskiing, and wakeboarding. In addition, the Los Padres National Forest and Fort Hunter Liggett within the watershed provide camping, hiking, swimming, hunting, fishing, equestrian, and wilderness experiences. These areas of the watersheds also provide for interpretation and study of archeological and historic sites, nature study and enjoyment, and artistic and esthetic appreciation of a natural landscape. Unfortunately, recreation also presents the opportunity for harm to the watershed due to trash, vandalism, point and nonpoint pollution, damage to public and private property, crime and other inhibitors to water quality. The continuation of recreational opportunities and the community economic benefits they provide is a high priority for these watersheds while preventing any negative impacts from those activities.

STATUS and REFERENCES:

Much of the recreation in these watersheds occurs in the mid-watershed area in and around the two reservoirs. Many people have purchased property around the reservoirs because of the recreational uses available and rely on those uses to maintain their property values. The following is excerpted from the Salinas Valley Water Project EIR to provide insight into the economic benefit derived thereof.

> *The Monterey County Department of Parks quantifies and tracks use of the reservoir through "units." A unit constitutes any of the following: 1 camping fee, 1 day use fee for a vehicle or boat, yearly boat permits, or a set dollar amount of concession intakes. Units are different than visitor-days, but it can be assumed that an increase in units is equivalent to an increase in visitation, and vice versa. Although there appears to be a general relationship between lake levels and the number of units bought, historical data shows that there is not always a direct correlation. For example, Table 5.9-2 shows that in 1987 the average surface elevation at Nacimiento was 754 feet with 28,137 units bought. In 1992 the average elevation was substantially lower (696 feet) and more units were purchased (30,538). Still, there is a general trend that suggests visitation increases as lake levels increase.*
>
> *An average of 23,452 units per year is sold at Nacimiento, based on years 1985 through 1994. The range in annual units sold for this period was between 9,885 in 1989 and 32,896 in 1993. At San Antonio Reservoir during the same period of time, 99,660 units were sold on average per year, with very large fluctuations. The annual high and low sales points during this period were 25,983 units in 1990 and 185,751 units in 1987 (the north shore of San Antonio Reservoir was closed 6 months in 1990, all of 1991, and for 6 months in 1992, which likely affected units purchased). Table 5.9-4 shows combined number of units sold for the two reservoirs. As described above and shown in Tables 5.9-2 and 5.9-3* [tables are within SVWP EIR], *although there appears to be some correlation between unit sales and lake levels, this relationship is not linear and only reflects a general relationship. There may be many factors influencing recreational use, including among other things, facilities availability, weather conditions, and trends in rainfall over a several year period, etc.*

An increase in year-round and visitor populations around both reservoirs and the surrounding areas may have increased recreational pressures in the watersheds. The infrastructure of the watersheds, specifically during the periods of heavy recreational use, may not have kept up with the increase in population. Additionally, increased usage and development may impact the rural character of the watershed. Prevention of negative impacts from recreational uses is a high priority for these watersheds. The large numbers of people during the height of summer can, and often does, result in an increase of illegal activity including pollution of reservoirs, trespass on private property, vandalism and theft.

Specific concerns for water quality related to recreational use include: a wide variety of trash and debris in the reservoir and inlets, increased use of toilet facilities, vandalizing of toilet facilities, improper disposal of camper waste, unsafe boat speeds exacerbating erosion along the shoreline, petroleum leaks from boat engines, overcrowding of Nacimiento Resort parking areas at the 'Point' and launch ramp marina, and vandalizing of boat docks. While there is little data available, there are concerns that aging or inadequate onsite wastewater systems could contribute negatively to water quality. Nutrient loading which can lead to algal blooms and pathogen loading has serious impacts on water quality. There is significant documentation of these impacts from other watersheds. While there is insufficient water quality data for these watersheds, it will be important to assess and document the extent to which there are existing water quality problems or potential problems that can be prevented, These types of pollutants can make water unsuitable for recreational and other watershed uses. All of these concerns and others as well, are greatly exacerbated when recreational use is heavy.

Hiking, camping, hunting, fishing, equestrian, and other wilderness experiences within the Los Padres National Forest, Fort Hunter Liggett and the Ventana Wilderness Area can be impacted due to problems such as trash, trespassing, vandalism, improper disposal of camper waste, erosion from unclassified/unauthorized (non-system) roads utilized for camping/hiking, intentional and un-intentional damage to archaeological resources, etc.

GOAL: Ensure the continuation of the economic benefits and attractive and enjoyable recreational experiences available to residents and visitors with a focus on water quality and watershed protection.

OBJECTIVE 1: Focus recreational uses in existing public areas where there is supportive infrastructure. Reduce/eliminate trespass on private property within the watersheds.

Implementation 1A: Support the use of passive and active deterrents to trespass on private property as well as public property not designed for public use. Passive deterrents should include but not be limited to: signs, education and outreach. Active deterrents should include but not be limited to: fencing and log booms where these would effectively protect the public resource.

Implementation 1B: Support the efforts of Monterey County Parks Dept., the Monterey County Water Resources Agency, and the Sheriff's Departments in both counties in efforts to deter and punish illegal activities that affect watershed health.

OBJECTIVE 2: Minimize soil disturbance and threats of erosion (campgrounds, parking lots, boat ramp areas, non-system roads etc.) in public areas and on public lands.

Implementation 2A: Provide informational signs and support efforts of recreational clubs to inform the public of erosion problems, their related impacts and erosion prevention measures.

Implementation 2B: During the summer season (May through September), minimize soil disturbance from vehicles in unpaved areas by posting signs, patrolling, and providing information to visitors about erosion and water quality.

Implementation 2C: During the off-season (October through April) restrict vehicle access in unpaved areas by posting signs and patrolling the area. (Possible Sign Examples: "Access to marina only", "No overnight camping")

Implementation 2D: Ensure that future, or expanded, recreational areas are carefully planned to protect watershed resources (water quality, habitat, etc.)

OBJECTIVE 3: Promote protection of water quality and respect for the watersheds by visitors and residents in recreational areas. Examples include but are not limited to: reducing incidents of parking in un-marked areas, littering, camping in non-camping areas, and improperly disposing of waste.

Implementation 3A: Work with multiple community groups and agencies to promote campaigns that are customized to the target audience such as: "Be a Watershed Citizen", "Welcome to our Watershed", "Party On: Keep Your Lake Clean", "Keep Nacimiento/San Antonio Blue" and others.

Implementation 3B: Encourage enforcement of existing ordinances prohibiting overnight camping on land not designated for overnight camping by the appropriate county's Sheriff's Department or Monterey County Parks Rangers.

Implementation 3C: Encourage SLO and Monterey counties to review existing ordinances and to adopt severe fines for littering, dumping, or polluting in the watersheds. These ordinances would need to be enforced by the appropriate entity for either land or water activities.

Implementation 3D: Encourage Monterey County Water Resources Agency and Monterey County Parks Department to provide an increased number of parking, restroom, and trash facilities at strategic public recreation sites. Homeowners associations should be encouraged to provide additional facilities for their own, private users. New or improved parking areas should be designed as permeable surfaces to minimize runoff potential.

Implementation 3E: Promote a campaign to report vandalism of restroom facilities, boat docks, and other private or public facilities.

Implementation 3F: Consider raising funds to support the development of a comprehensive recreational guidebook and map of both watersheds that includes a foldout map with details of recreational activities and facilities that exist within the reservoir area and that exist outside of the reservoir areas, and lists rules and regulations in place to protect the natural resources for current and future use. Utilize existing guidebooks to ensure this product is unique and valuable.
Implementation 3G: Work with County Parks on the possibility of posting "Lake Watch" signs at boat docks and floating toilets in a "Neighborhood Watch" attempt to deter negative behavior.

Implementation 3H: Encourage the US Forest Service to promote dispersed car camping in already impacted areas rather than creating new camp-sites in pristine areas of the Los Padres National Forest.

Figure 36. Recreation at the San Antonio Reservoir
(Source: Monterey County Parks, 2007)

ISSUE 2 – Gaps In Knowledge: Monitoring & Information Needs

ISSUE:

Protecting the water quality of these streams and reservoirs is a high priority for all watershed uses. However, there are few documented water quality problems in these watersheds. This may mean there are not water quality problem or that we are currently not aware of existing problems or potential problems. Establishing a baseline of water quality from which to track change over time is a priority for these watersheds.

STATUS and REFERENCES:

Water quality concerns of the Regional Water Quality Control Board for these watersheds are:

Nacimiento reservoir – Mercury in fish tissue;
Las Tablas Creek – Excessive mercury, sedimentation, total dissolved solids (TDS), electrical conductivity (EC), sulfate, and nickel.

A Total Maximum Daily Load (TMDL) clean up plan was developed by the Regional Water Quality Control Board for mercury from mine runoff in Las Tablas Creek (which drains into the Nacimiento Reservoir). In addition, the U.S. Environmental Protection Agency (USEPA) has listed the mines on the National Priority List of Superfund Sites which triggered Federal clean up measures superseding the TMDL. The Klau/Buena Vista mines are non-operational and are considered to be significant sources of mercury entering downstream waterways.

Below is a brief summary of water quality findings that are more thoroughly described in the **Existing Conditions** section of this Plan. Most of the statements below are based on very little data and do not signify water quality problems. Rather, they are areas to consider in the establishment of baseline monitoring data. Establishing baseline conditions of local water quality may be important to maintaining good water quality over time.

Information Source	San Antonio River Watershed :
Camp Roberts INRMP, 2000	Camp Roberts found total dissolved solids (TDS) and selenium **at levels that occur naturally in the river**.
LOW	Monterey County Water Resources Agency found nitrate levels in the reservoir that are **below the maximum allowable for drinking water**.
Jenks and Adamson, 1970	Monterey County Parks has had reservoir samples with **high levels** of manganese.
Camp Roberts INRMP, 2000	Camp Roberts' monitoring found a **potential problem** with cadmium in the San Antonio river.
Logan, 1987	Monterey County Flood Control and Water Conservation District found **high level** of nitrates in a Lockwood well
	Nacimiento River Watershed:
Heritage Ranch Sanitary Survey Update, 2005	The source water for the Heritage Ranch CSD wells is the Nacimiento River. The water quality in these wells, located in the Nacimiento River one mile downstream of the dam, **meets primary drinking water standards** and except for occasional detection of high iron and manganese levels also **meets secondary drinking water standards**.
Appendix E **of WRI Analysis**: Report by SLO County Public Works, Water Quality lab report summarizing history and results of the Nacimiento Water Project (NWP) water quality monitoring program	San Luis Obispo County Public Works Department has collected some data at the intake location for the Nacimiento Water Project. Results vary, and can be a function of different factors. Most notable are **high values** found for total coliforms, algae, turbidity, aluminum, iron, and manganese. The monitoring program was initially designed to provide information for water treatment plant design, and will be revised to meet ongoing operational needs. Concerns for ongoing operations include invasive species, runoff, pathogen loading, nutrient loading, carbon loading, suspended solids and metals deriving from various watershed uses, to name a few.
Regional Water Quality Control Board, WMI, 2002	Nacimiento Reservoir is **listed as impaired** for mercury in fish tissue
	Las Tablas Creek: (in the mid 1990's)
Salinas Valley Water Project, EIR, 1998	Low nitrate levels
Salinas Valley Water Project, EIR, 1998	High aluminum and iron levels

These sources are found in the WRI and WRI Analysis, Nacitone 2008.

Figure 37. Possible Water Quality Concerns

It will be important to determine the best way to assess and document the extent to which these are existing water quality problems or potential problems that can be prevented. For example, one water quality concern voiced often by several Steering Committee members is that of trash in streams, creeks, and reservoirs. Although there is anecdotal information from watershed residents, there are no data available to consider this issue. It may be possible to detect such a problem by establishing an indicator or monitoring for toxins created by degrading plastic, metals, or volatile organic compounds that might be residuals from trash and debris.

GOAL: Maintain and protect the quality of surface water and groundwater found in these watersheds.

OBJECTIVE 1: Establish baseline water quality data of relevant constituents for water bodies in these watersheds to ensure water quality is protected, that early detection to prevent problems is possible, and to track changes in water quality over time.

Implementation 1A: Continue to compile a list of other entities conducting water quality and invasive species monitoring in these watersheds and determine: constituents monitored, frequency, locations, and purpose of the monitoring.

Implementation 1B: Support the coordination of water quality monitoring and interpretation in these watersheds through use of mechanisms such as compatible Quality Assurance Project Plans (QAPP), database formats, and facilitation of roundtable discussions to understand the data.

Implementation 1C: Encourage responsible agencies to work together to provide funding for establishing a comprehensive monitoring program that will provide data to all agencies, and eliminate redundancies. This data could then be used to identify problems and recommend corrective actions.

Implementation 1D: Partner with the water purveyors, Resource Conservation Districts, Natural Resources Conservation Service, Cal Poly, and others to monitor the effectiveness of voluntary management practices for protecting water quality; ensure that data is kept confidential and summaries of the information do not identify any landowner.

Implementation 1E: Support the initiation of a volunteer water quality monitoring program including monitoring at the confluences of creek to main stem and creeks to reservoirs.

Implementation 1F: Encourage EPA to conduct a reservoir bottom sediment study of Nacimiento Reservoir to better understand mercury contamination.

OBJECTIVE 2: Identify potential contaminant sources, magnitude of threat to water quality, possible preventive or mitigation measures, and gaps in knowledge**.**

Implementation 2A: Develop a thorough, comprehensive, quantitative as well as qualitative, description of all current and projected watershed uses that can harm water quality. Evaluate these uses for potential to degrade water quality. Identify remaining gaps in knowledge and develop mechanisms to address these.

Implementation 2B: Working with watershed users, identify possible preventive or mitigation measures for problems or potential problems identified in the study described above.

Implementation 2C: Collaborate with entities required to conduct sanitary surveys including SLO County Public Works Department Water Quality Lab, and Heritage Ranch Community Service District.

(This page intentionally left blank)

ISSUE 3 – Preventing Pollution from Point and Nonpoint Sources

ISSUE:

Making all watershed users aware of point and nonpoint sources of pollution and how to recognize and prevent them is a high priority for these watersheds.

STATUS and REFERENCES:

Point and nonpoint source pollution negatively affect water quality measured by the ability of the water body to support state designated beneficial uses. See a detailed discussion of beneficial uses in the **Existing Conditions** section of this Plan.

Point source pollution results when water conveys pollutants into a waterway from a discrete, potentially identifiable source. Point sources such as domestic wastewater and commercial / industrial waste discharges can be identified and controlled and are regulated with discharge permits. Existing point sources in these watersheds are allowed to discharge regulated amounts of: wastewater, solid waste, and processed water. There is a complete list of point sources permitted to discharge in these watersheds in the **Existing Conditions** section of this Plan.

Nonpoint sources of pollution are difficult to see, measure, or regulate. They result when water (including stormwater and non-stormwater) moves across the landscape and picks up pollutants such as nutrients, sediment, chemicals, oil and grease, bacteria, etc. and conveys them into water bodies (rivers, streams, reservoirs, and groundwater). Nonpoint sources may occur at many different locations spread over a large area and are regulated by waste discharge requirements, conditional waivers in the public interest, or prohibitions (2004 Nonpoint Source Implementation and Enforcement Policy, State Water Resources Control Board; webpage: http://www.waterboards.ca.gov/water_issues/programs/nps/#programs).

Potential nonpoint sources of pollution relevant to land uses in these watersheds:

- **Fertilizers and pesticides from careless application or improper disposal;**
- **Bacteria and nutrients from malfunctioning septic systems; human and animal feces;**
- **Sediment from erosion due to poorly designed or maintained roads and construction sites, streambank, shoreline, and rangeland erosion, abandoned mines, off-road vehicles, recreational trails, burned areas;**
- **Stormwater conveyance of grease, oil, metals, nitrogen/phosphorus-based fire suppression chemicals; nutrients, organic carbon, sediment, chemicals, and trash. Sources of these materials may be legal activities, or they may be from illegal activities such as unpermitted grading, methamphetamine labs and marijuana growing areas.**

It may be possible to determine which of these are causing water quality problems, or pose potential problems that can be prevented. However, an effective watershed-wide approach, emphasizing cooperative solutions, increased education, and development of partnerships, will be more likely to reduce all types of nonpoint source pollution in these watersheds.

Oak Shores Interceptor line:

A specific example of a known, potential source of pollution is the Oak Shores Interceptor line. The sewage collection system for this Nacimiento Reservoir community consists of nearly 10,000 feet of pipeline and several manholes located up to approximately 40 feet below the high water line of the reservoir. Exposed lateral pipelines coming from houses to the interceptor line may be vulnerable to breakage and vandalism. The sewage from residences could then flow into the reservoir. There are also challenges for maintenance and repair staff to gain access to the interceptor line when the line is under water. There is a program in place to ensure that no annexed parcels will be allowed to connect to the Interceptor line. Refer to existing conditions discussion for more examples of potential sources of point and/or nonpoint pollution.

GOAL : Reduce point and nonpoint source pollution in support of designated beneficial uses of local water bodies.

Objective 1: Encourage and provide incentives and information for public and private landowners and homeowners to protect ground and surface water while protecting both property and water rights.

Implementation 1A: Offer homeowner and small business owners water quality protection workshops regularly that detail safe pesticide product use and disposal; septic system maintenance; preventing pollutants from paved and unpaved roads from entering waterways, and generally increase the awareness about the potential impacts of residential areas on surface and groundwater quality.

Implementation 1B: Obtain or develop a flyer and distribute to all watershed residents detailing how we all have a role in protecting water quality and watershed uses.

Implementation 1C: Sponsor educational programs for farmers and ranchers specific to issues in these watersheds at which participants can earn continuing education units. Continue to sponsor Ranch Water Quality short courses.

Implementation 1D: Develop interpretive signage in strategic locations around the watersheds describing how each person has a role in protecting water quality. This could include explaining that Nacimiento Reservoir is a source of raw water that will be treated for drinking water and should be cared for.

Implementation 1E: Educate the public on the watershed and water quality impacts of illegal drug production such as marijuana farming on public lands and meth labs in our communities.

Objective 2: Reduce mercury sedimentation and acid mine drainage in the Nacimiento River watershed**.**

Implementation 2A: Continue to provide community support to US Environmental Protection Agency (EPA) for remediation of the Klau/Buena Vista Superfund Site through participation in the Community Advisory Group and public review and comment throughout the Superfund remediation process. Community support and support from our elected officials is critical to ensure that Congress allocates adequate federal funds to complete the project once the Superfund remediation assessment and design phases are complete.

Implementation 2B: Encourage the MCWRA to request that EPA conduct a comprehensive reservoir bottom sediment study of Nacimiento Reservoir to provide detail to decision makers about future management decisions to include the extent of contamination and the timeframe involved that would reduce mercury level in fish tissue to acceptable levels.

Objective 3: Improve erosion and sediment control for new development and redevelopment in both counties and support the use of Low Impact Development (LID) (integrated management measures that mimic the natural hydrology of the watershed) for stormwater management and road design in urbanized area.

Implementation 3A: Conduct community outreach in the Nacimiento River watershed of San Luis Obispo County to increase awareness about the County's Stormwater Management Programs including informing the public that there will be more frequent, comprehensive grading/stormwater inspections and enhanced enforcement of violations. The new inspection programs, provided for in the revised San Luis Obispo County ordinances, are scheduled to be implemented between 2010 and 2011.

Implementation 3B: Community road associations or other local entities could partner with county departments in the relevant county, Resource Conservation Districts, water purveyors, and other entities to provide annual trainings for private contractors and county maintenance and road crews that would include instruction on the use of management practices that minimize pollutant runoff and erosion damage caused by roads and construction projects.

Implementation 3C: Encourage SLO County Planning and Building through existing regulation to adequately condition new development to ensure infrastructure keeps pace with increased recreational use which may impact shoreline erosion and to determine cumulative impacts of operational launch ramps when water is below High Water Mark.

Implementation 3D: Provide community support for LID methods to reduce the volume and velocity of urban stormwater runoff to downstream lakes and streams by commenting on draft county ordinances as required by the County Stormwater Management Programs.

Goal: Reduce the potential for contamination of the reservoirs by domestic wastewater.

Objective 1: Reduce the potential for sewage leaks from the Oak Shores 'Interceptor line' into the Nacimiento Reservoir.

Implementation 1A: Encourage SLO County (County Service Area 7A) to continue monitoring for leaks and explore other options to fund project which would eliminate this risk to water quality. Institute recommendations #2 through #5 from the 2004 Interceptor Bypass Study.

Implementation 1B: Design and build modified collection system to minimize chance of leakage into the reservoir and to facilitate maintenance and repairs. Ensure that all laterals as well as the collection line are buried and are not vulnerable to vandalism.

Objective 2: Reduce the potential for sewage contamination from public areas to both reservoirs.

Implementation 2A:
Ensure that floating toilets and any other non-plumbed public toilets are routinely pumped and kept clean. Ensure that spills are cleaned up immediately.

Implementation 2B:
Ensure that public, plumbed toilets are properly operating and kept clean. Ensure that spills are cleaned up immediately (Steering Committee requested more detail here).

Implementation 2C: Ensure that public toilet facility capacity matches usage needs.

Objective 3: Reduce the possibility of contamination from septic tanks to both reservoirs.

Implementation 3: Encourage homeowners and residents in these watersheds to do regular septic system maintenance and educate them about "septic safe" practices and cleaning products.

Objective 4: Reduce the possibility of contamination from residential and commercial sewage collection infrastructure to both reservoirs.

Implementation 4A: Ensure that home owners and business owners know who to call for immediate repair of broken, leaking or backed up sewage lines.

Implementation 4B: Ensure that home owners and business owners know who to call if they observe a leaking sewage line that has not been repaired in a timely manner.

Objective 5: Ensure that wastewater treatment facilities operate pursuant to their waste discharge permit.

Implementation 5: Properly design, site, and maintain wastewater treatment facilities and all associated infrastructure.

Figure 38. Impacts of culvert on the Tank Road
(Source: US-LT RCD, 2007)

ISSUE 4 – The Role of Agriculture

ISSUE:

Agriculture in these watersheds is an important contributor to the local economy and is the base of livelihood for many multi-generational families and emerging businesses. Consistent private property rights, and the ability to make decisions internally rather than by an external entity, are what make agricultural endeavors viable in these watersheds. Stewardship of agricultural lands and watershed functions is also crucial to the viability of agricultural operations.

STATUS and REFERENCES:

Agriculture is desired in these communities for many reasons. Farming and ranching operations in these watersheds bring dollars to the local and state economy through the production and marketing of vegetable row crops, fruit and nut orchards, wine and table grapes, cow-calf operations, and contract grazing. These operations also create jobs such as crop care consultants, ranch managers, field foreman and crews, equipment and supply vendors. Beyond these direct, economic benefits, it has been said that, "if you eat food and wear clothes, you are involved in agriculture."

Farming and ranching in these watersheds is also the backbone of property values based upon the rural character and aesthetic views that exist here. More and more Californians and others seek places with a rural feel that are far from urban activity. For many, a move to places like these watersheds symbolizes a personal success in having escaped the hussle and bussle of urban living. Although they come to enjoy this rural paradise, some who move here do not anticipate but discover a vibrant, working landscape of farming and ranching businesses. They discover large, slow-moving farm implements and livestock carriers on roads; wild pig and deer hazards on the roads; dust; noise; and wine tasting and leisure traffic all due to the rural character they sought. This influx of urbanites can cause misunderstandings or accusations about how agriculture impacts the watersheds. There is a need to establish and maintain neighborly communication and information sharing.

Well managed agriculture can provide specific water quality benefits compared to some other land uses. The ground required for raising crops or livestock allows rainwater to saturate the soil keeping organic matter alive, and providing recharge areas to ground water. The soil and vegetation that agriculture requires protects surface water quality by filtering out excess nutrients or other pollutants as water crosses the land. Well managed agricultural operations can do a better job of preventing erosion than some other land uses. In addition, some wildlife species can benefit from agricultural operations and the open spaces provided.

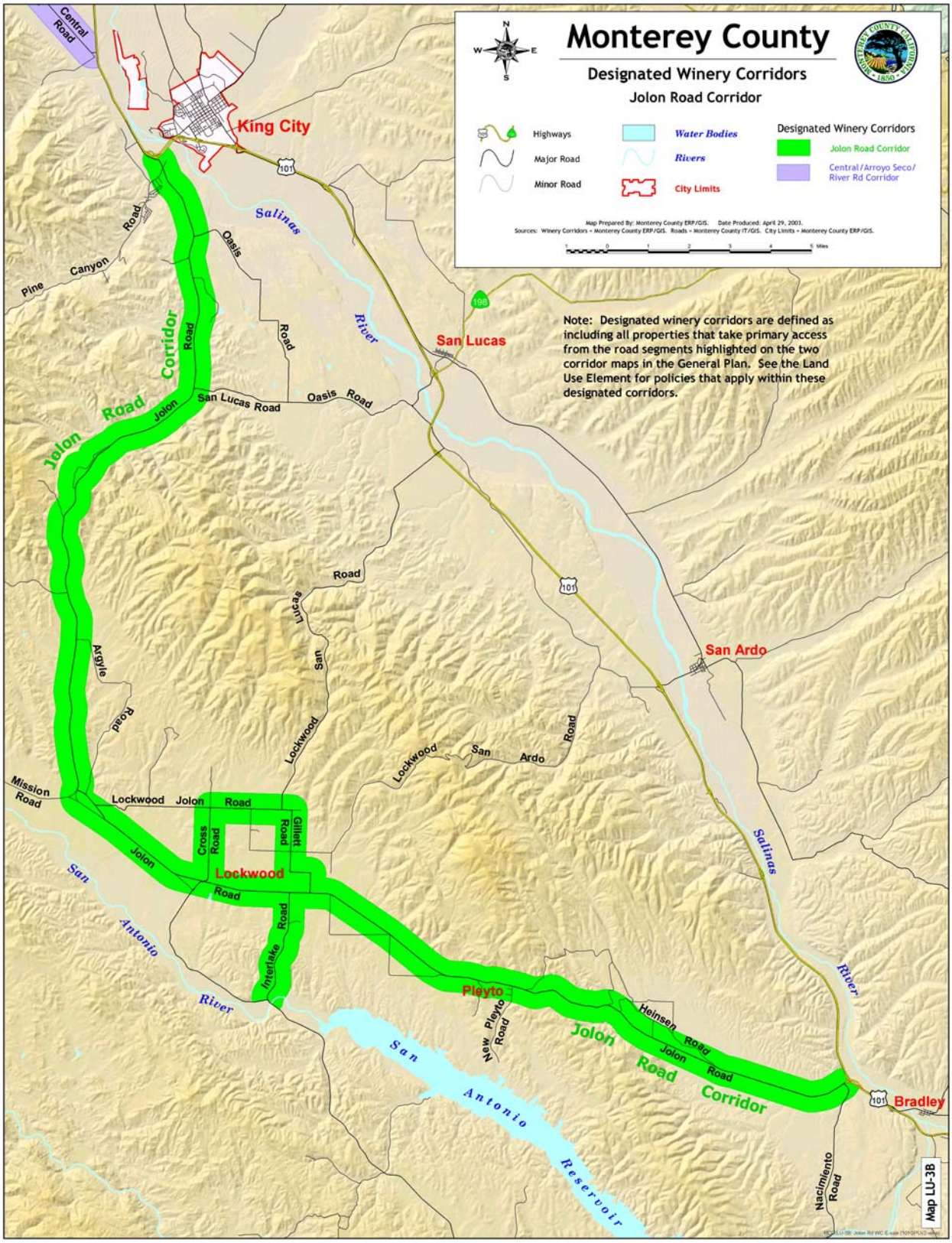

Figure 39. Designated Winery Corridor

GOAL: Ensure that agriculture (farming and ranching) remains a vibrant and economically viable part of these watersheds.

OBJECTIVE 1: Encourage and support the efforts of landowners, farmers, and ranchers to protect soil, water, and air resources critical for keeping agricultural operations a productive part of the economy through the promotion of research, education, and outreach.

Implementation 1A: Monterey County Water Resources Agency (MCWRA) should work with UC Cooperative Extension, Resource Conservation Districts, Farm Bureaus and others to offer the "Ranch Water Quality Short Course" periodically to existing leaseholders on MCWRA land and to other, local rangeland owners / operators. Prepare and distribute DVDs of the November 2007 course conducted in the San Antonio watershed.

Implementation 1B: The Monterey and San Luis Obispo County Farm Bureaus should work with UC Cooperative Extension, Resource Conservation Districts, County departments, water agencies and others to offer water quality protection trainings and workshops to farmers and ranchers in these watersheds on a regular basis. Both implementation 1A and 1B should include bringing in innovative researchers and land managers to share their knowledge and experience with local farmers and ranchers.

Implementation 1C: Encourage watershed specific research through collaborative efforts with private and public landowners to develop strategies to protect natural resources as part of profitable agricultural operations.

Implementation 1D: Assist the Natural Resources Conservation Service (NRCS), Resource Conservation Districts and others with outreach to ensure information on conservation incentive programs through the Farm Bill and other mechanisms are well known to local landowners, farmers, and ranchers.

Implementation 1E: Utilize the Resource Conservation District of Monterey County's Livestock and Lands program to provide educational workshops, materials, and planning assistance for qualified livestock owners in these watersheds.

Implementation 1F: Utilize the general strategies (those not specific to the lands owned by the MCWRA) contained in the Grazing Management Plan as an example for management of grazing in the two watersheds.

Implementation 1G: Create an open dialog about the use of grazing for controlling noxious weeds, improving habitat and improving the health of the grasslands of the Nacitone watersheds.

Objective 2: Educate the public about agricultural operations, its role in the local economy and efforts in environmental protection.

Implementation 2A: Develop an agricultural speaker's bureau through local chambers of commerce, Farm Bureau and farm centers to provide presentations and farm/ranch tours upon request.

Implementation 2B: Encourage local farmers and ranchers to offer their perspective and experience as part of AgKnowledge, an emerging program to educate community leaders about the role agriculture in our communities. The program began in 2007 as part of a joint effort by Monterey County Ag Education and the Grower-Shipper Foundation.

Implementation 2C: Encourage and support local communities to pass to younger generations the importance of protecting watershed uses and watershed resource through schools, farm days and 4H.

Objective 3: Improve coordination and communication among regulatory entities, private, and public entities to manage land and water resources in an effective and environmentally conscious manner.

Implementation 3: Consider creating a Grazing Advisory Committee made up of members of the ranching community, RCD, NRCS and UC Cooperative Extension that would meet periodically to advise public agencies on their grazing programs.

Objective 4: Encourage ranch managers to monitor grazing land on a continuing basis.

Implementation 4A: In order to evaluate effectiveness of management strategies on grazed land, it is recommended that the Residual Dry Matter (RDM) is monitored each fall to ensure that grazing lands and facilities are in good order. Seasonal variations and rainfall should be considered in the RDM evaluation.

Implementation 4B: Encourage ranchers to attend periodic Ranch Water Quality Short Courses.

Implementation 4C: Support private landowners to prepare and implement with assistance from CAL Fire and the local fire districts, an integrated fire plan that addresses the use of managed fires and grazing to accomplish objectives of reducing understory and the potential for hotter, more destructive wildland fires.

ISSUE 5 – Fire in the Watersheds

ISSUE:

The risk of large, unplanned fires in these watersheds is very high due to an abundant fuel load.

> *Far from being the disasters that the media frequently portray them to be, fires in California are essential in maintaining the state's spectacular biodiversity. Not only do fires engender the diversity of California's ecosystems, they directly and indirectly affect the services and products these ecosystems provide to the state's human residents; these include clean water, timber, and recreation opportunities. This is not to say that all fires are beneficial or that they now burn as they did historically. Some fires may be disasters from both an ecological and a social perspective (California Watershed Assessment Manual, 2005).*

The risk to loss of life and property from wildfires has been substantially increased because of the encroachment of residential uses within and adjacent to fire-prone woodlands. Alterations of the period an area burns due to fire suppression and other changes in the natural fire cycle as well as changes in climate on fire behavior are just starting to be understood. Managed burns (often called prescribed burns) and mechanical thinning can be used to safely reduce fuel load and also to manage invasive vegetation. Only Fort Hunter Liggett currently uses prescribed burns in these watersheds as a regular tool. Judicious grazing can also reduce vegetation fuel load. Educating the public, preventing catastrophic wildfires, and safely utilizing fire to conduct land management are priorities for these watersheds.

Fire management is important to preventing negative water quality impacts though not all of these impacts can be avoided. Loss of vegetative ground cover after a fire increases runoff sending eroded soil and nutrients, and other pollutants into the water. Included in this runoff can also be the nitrogen –phosphorus based fire suppression chemicals used by the Cal Fire (also known as the California Department of Forestry and Fire Protection) and other fire agencies. One of the most common of these fire chemicals is Phos-Chek which is dropped as a fire retardant from aircraft.

STATUS and REFERENCES:

There have been several major fires in the upper watersheds since this area was first settled. Significant watershed impacts occur including very large amounts of sediments which caused significant problems. The 1977 Marble cone fire was in part the result of a heavy "sticky snow" which fell in winters just prior to the fire which broke so many trees and large shrubs that fuel load increased by 80%. Similar conditions have occurred in the winter just prior to the 2008 Indians Fire which could have played a large part in the severity of the burn. Most large fires in these watersheds are lightning caused. However, fires may also be caused by people where sufficient fuel load and oxygen are available. Therefore, an educational approach to fire will be the most effective in preventing catastrophic events.

While this plan was being completed, two large fires called the Basin/Indian Complex and the Chalk Fire occurred in June/July 2008 and September/October 2008 respectively. The Indians Fire burned over 30,000 acres (approximately 14% of the entire San Antonio River watershed).

Final numbers for the Chalk Fire were not available before this plan went to press. The portion of the Indians Fire that burned in the San Antonio River watershed occurred in the upper watershed area primarily on the Los Padres National Forest and FHL land. Final Findings of facts and specific recommended treatments of the fire impacts were developed too late in the process to be used in this plan; however, the following is a summary of major initial findings. USFS analysis indicates that the "south side of the Indians Fire contains a large portion of high soil burn severity". More than 75% of the area that burned in the San Antonio watershed was classified as moderate to high severity; compared to the overall proportion of moderate to high severity in the entire Basin/Indians Fire which was approximately 60%. The hot nature of the fire is expected to create significantly increased runoff rates that could result in a doubling of the runoff that would have normally occurred from a storm of the same magnitude. Hazards are expected to be primarily related to flooding and debris flows. The fire was most severe in the Bear Canyon and Coleman Canyon (Mission Creek) sub-watersheds. Lessons learned from this fire should be incorporated in future updates to this plan. (USFS Draft BAER report August 2008, MCWRA 2008)

Following the Basin/Complex fire that occurred during the development of this Watersheds Management Plan, an interesting observation was made by a member of the Steering Committee. Understory had burned so hot as to damage mature oak woodlands in some parts of the burned area. However, on the Los Padres National Forest grazing allotment which has been nearly continuously grazed for 40 years, Valley Oaks emerged unscathed. It was suggested that this area could be monitored over time to better understand grazing for fire management.

Causes of California Fires 2000 - 2005	
Lightning	5%
Arson	7%
Debris burning	10%
Miscellaneous	13%
Undetermined	14%
Vehicles	14%
Campfire	3%
Equipment Use	27%
Power Line	3%
Playing with fire	2%
Smoking	2%

Source: www.cdfdata.fire.ca.gov/incidents/incidents_statsevents

Figure 40. Causes of California Fires 2000 - 2005

A fire policy of suppression in these watersheds has allowed substantial increase in fuel loads and can have significant economic costs. Statewide fire suppression expenditures for 2005-06 were approximately $105 million (3/2006 www.fire.ca.gov). If fire frequencies increased, fire intensity and damage would be expected to decrease. Fire suppression is a strategy that only temporarily avoids severe wildfires that endanger human life and property as well as water quality and watershed health. The following paragraph clearly states the importance of local involvement in fire management and is relevant for these watersheds:

> *"Californians need to embrace a different model of how to view fires on these landscapes. Our response needs to be tempered by the realization that these are natural events that cannot be eliminated from (Southern) California. In this respect we can learn much from the science of earthquake or other natural disaster management. No one pretends they can stop them, rather they engineer infrastructure to minimize impacts, and in this respect there is much that can be done at the local level".* Jon E. Keeley in *Fremontia.*

In addition, consideration of differential suppression in different habitats is warranted as depicted by Zeke Lunder, Chief Fire Planner/Fire Management/GIS Planner for North Tree Fire International.

> *Suppression damage is not equal across the landscape. Some areas are more susceptible to damage than others. Some pastureland and chaparral areas recover quickly from bulldozer impacts while others do not.*

Mr. Lunder also suggests that suppression using dozer lines and other disturbances could be avoided in areas of serpentine soils in the watersheds which are rich in endemic species. Further Mr. Lunder suggests that a holistic approach for determining suppression techniques is needed to address the best suppression methods for specific situations. For example, while mechanized fuel treatment is to be avoided in erosion prone areas, this same treatment may inadvertently act to spread invasives species when used elsewhere in the watersheds.

A discussion of fire suppression, fire management strategies, and water quality concerns caused by fires should be part of the improved communication and coordination effort suggested below as a recommendation of this Plan.

GOAL: Reduce the risk associated with catastrophic wildfire impacts on life, property, and natural resources through increased public awareness and understanding of what causes these events.

OBJECTIVE 1: Work with California Department of Forestry and Fire Protection, US Forest Service, Camp Roberts, Fort Hunter Liggett, Bureau of Land Management, Fire Safe Councils and other appropriate parties to address fire protection and fuel load reduction while enhancing watershed health.

Implementation 1A: Encourage all agencies and landowners to reduce fuel loads using a diverse set of vegetation management tools such as grazing, prescribed burning, and mechanical equipment where erosion hazard is not severe. This would reduce the cost and losses in the residential interface zones caused by devastating wildfires.

Implementation 1B: Support Local Fire Safe Councils to include, but not be limited to, the following activities:
a) provide a forum for the community to give input and provide local knowledge to policy makers.
b) organize workshops on fire safe topics such as creating a defensible space and providing defensible space rebates
c) review, discuss, distribute and comment on Cal Fire's plan for the watersheds with particular attention to the following:

- Conditions of burn permits
- Roadside fuel reduction
- Coordination of public and private fuel breaks
- Community evacuation plans
- Effect on streams and riparian habitat

Implementation 1C: Gather information among all parties on methods available for managing risks for preventing destructive wildfires in the watersheds and distribute this information to appropriate watershed users.

Implementation 1D: Encourage wildland firefighting agencies to develop appropriate mitigation for the impact of fire suppression materials.

Implementation 1E: Obtain flyers for local distribution and plan educational workshops for watershed residents on topics such as :

Maintaining a defensible space,
Ensuring a sufficient water source for fire prevention
Landscape with fire resistant trees and shrubs
Other fire prevention landscaping techniques
Safety and emergency protocol development for the home
Evacuation plans for humans and animals

Implementation 1F: Develop and use GIS and other mapping technologies to establish prioritized sensitive areas to target appropriate fire suppression techniques and treatments.

Objective 2: Work with all agencies within the watersheds to consider elements of future development that would recognize the inevitability of fire and protect infrastructure property and vital watershed cover.

Implementation 2A: Encourage participation by residents in both watersheds to provide comments to future planning documents related to fire and fire management for carefully planned development away from forested areas and to ensure adequate defensible space is incorporated. This can be done on an individual basis or through existing or newly established Fire Safe Councils or other community associations.

Implementation 2B: Work with county and fire management entities to carefully plan any future development near or adjacent to areas of high fire potential and in areas that are difficult to provide fire protection. Support and/or conduct documentation of the increased damage that occurs when housing/other buildings are in proximity to forests and work with county planning departments to incorporate guidelines.

Implementation 2C: Encourage the Monterey District of the Los Padres National Forest to develop a Wilderness Areas Fire Management Plan for the Monterey District.

Implementation 2D: Encourage the cooperation of the fire departments and air pollution control districts in allowing controlled fire as a management tool on agricultural and rural lands in the watersheds. Work with agricultural land owners to permit the use of controlled burns to address excessive and overgrown underbrush.

Objective 3: Work with CalFire and US Forest Service (in light of the Basin and Indians fires) to include the community in rehabilitation of burned areas and to work toward increased preparedness for post-fire work.

Implementation 3A: Encourage fire agencies to include knowledgeable watershed residents in the planning of rehabilitation of burned areas. Encourage these agencies to work with watershed residents to prevent the premature mandatory evacuation of individuals who have the local knowledge needed by fire agencies to protect watershed residents and resources.

Implementation 3B: Encourage watershed residents to actively participate in Fire Safe Council and ensure information is passed to residents of the watershed to help them prepare for future fires.

Implementation 3C: Encourage Fire Safe Councils, fire agencies and residents to be prepared to contend with post-fire water quality issues that are as inevitable as the fire themselves.

Figure 41. CALFire aircraft dropping flame retardent
(Source: CALFire, 2008)

(This page intentionally left blank)

ISSUE 6 – Taking Enforcement Action

ISSUE:

Inadequately enforced regulations result in negligent practices and illegal activities that can negatively impact water quality and watershed uses.

STATUS and REFERENCES:

In some cases, the most efficient and cost effective method for protecting water quality from point and nonpoint sources of pollution is to enforce existing regulations. Lack of adequate enforcement can lead to the following types of activities that may cause harm to water quality.

- grading without a permit causing erosion, sedimentation and transport of other pollutants
- littering and dumping of trash
- abandoned methamphetamine labs and hillside marijuana gardens
- vandalized public toilet facilities
- careless boat operation causing fuel leaks or shoreline erosion
- vandalized boat docks spreading Styrofoam and other debris in the reservoir

Activities that do not necessarily affect water quality, but that are priorities to prevent in these watersheds include:

- removal of oak trees under certain conditions and in specific locations
- disturbance or destruction of cultural resources

GOAL: Enforce existing regulations, laws and ordinances that will help protect water quality and watershed health.

Objective 1: Support jurisdictional entities to use their existing authority rather than develop new regulations.

Implementation 1A: Encourage cross-jurisdictional communication to identify barriers to and potential improvement of enforcement.

Implementation 1B: Communicate boating regulations and watershed protection measures at each entrance to the reservoirs through handouts, signage, etc.

Implementation 1C: Encourage MCWRA and San Luis Obispo county to work together with local groups to develop materials (pamphlet, brochure) explaining existing regulations, jurisdictional areas, and available services and resources for use by residents and visitors.

Implementation 1D: Encourage San Luis Obispo County to do more to educate homeowners about existing grading and erosion control regulations and to better enforce those regulations.

Implementation 1E: Support the development of a management plan that involves community input and participation as required for the Milipitas Special Interest Area. This Area was designated by the US Forest Service in the Los Padres National Forest Plan in order to protect cultural resources and cultural landscape of the upper watershed.

Implementation 1F: Encourage landowners to consult with UC Cooperative Extension, Resource Conservation Districts, Farm Bureaus and others for erosion and sediment control programs.

Objective 2: Encourage the public to become familiar with and utilize Cal Fire Standards for protecting homes and properties.

Implementation 2: Include Cal Fire Standards 1 – 8 (methods for defending residential properties against fires) in a 'Watershed Citizens' guide which is recommended under other Goals in this Chapter. These standards include: maintaining a defensible space, ensuring a sufficient water source for fire prevention, landscape with fire resistant trees and shrubs, other fire prevention landscaping techniques, safety and emergency protocol development for the home, evacuation plans for humans and animals.

Objective 3: Encourage the public and all jurisdictional entities to become familiar with existing laws that protect cultural resources such as California Environmental Protection Act (CEQA) for local and state projects and the National Environmental Protection Act (NEPA) for federal projects or projects on federal lands. Cultural resources can include archaeological sites, historic sites, actual locations, landscape features, and specific plants.

Implementation 3A: Recommend funding for a CEQA workshop to be made available to local county staff, landowners, and private consultants working on both private and public projects to cover all aspects of the law and implementation, not just the cultural resource aspects.

Implementation 4A: Because of the prevalence of archaeological and historic sites in these watersheds, develop a user friendly manual on how to comply with CEQA when cultural resources may exist in a project area and how to handle burial sites if found with reference to the governing laws.

The following two Objectives are specific to the enforcement of the San Luis Obispo County Stormwater Management Programs and Ordinances:

Stormwater Management Objective 1: Improve erosion and sediment control for new development and redevelopment as part of County Stormwater Management Programs.

Implementation 1: Conduct community outreach regarding new County Stormwater Management Program requirements that include more frequent, comprehensive grading/ stormwater inspections and enhanced enforcement of violations as provided for in new County ordinances and new inspection programs scheduled to be implemented between 2010 and 2011.

Stormwater Management Objective 2: Detect and eliminate illicit discharges within urban areas according to the new County ordinance.

Implementation 2: Enforce the new County Stormwater Pollution Prevention and Discharge Control Ordinance. Agriculture is specifically exempted.

ISSUE 7 – Coordination & Communication

ISSUE:

Ineffective coordination and communication between and among counties, jurisdictional entities, regulatory entities, community groups and residents in the watersheds can negatively impact water quality and watershed uses.

STATUS and REFERENCES:

Lack of coordination and communication between large public land managers (such as the military, national forest, MCWRA) and local community's presents challenges in protecting water quality and watershed uses. Coordination and communication among agencies and communities can deter the spread of invasive species from one location to another (Yellow star thistle, Quagga mussels, certain algae species, white bass, other invasives) and pool resources and information to cooperatively manage resources (possible examples include: Tank Road use and impacts, grazing lands, fire management, water quality monitoring, clean up of marijuana growing sites in upper watersheds).

Increasing communication and coordination among the various parties in these watersheds can prevent the loss of watershed uses and ensure protection of water quality. Public agencies and governmental representatives such as County Supervisors should maintain a watershed-wide perspective and strive to be responsive to issues and conditions in smaller, sub-watersheds.

Members of Steering Committee, TAC and members of the public rank their top issues and concerns in the watersheds

Figure 42. (Source: MCWRA, 2007)

From the public agency perspective, cooperative partnerships are the most cost effective way to manage public resources with limited funding. These two watersheds are in two counties. In both watersheds there are large landowners whose actions can have a significant effect on the management of watershed resources. In both watersheds, private landowners are largely dependent on the Monterey County Water Resources Agency's water resources for the development and enhancement of their investments. Those water resources in turn, are dependent upon good stewardship of other lands in the watersheds. By working in a more coordinated and cooperative manner, the two counties can identify issues and develop solutions before a regulatory action is considered necessary by outside agencies.

An important tool that will enable counties and other entities to discuss and address issues that arise is an inventory of existing data sources and programs for these watersheds. The *Watershed Resources Inventory* (WRI) of this Plan located in Appendices A is a step in that direction with over 200 source references concerning water supply, water quality, extent and condition of natural resources. The MCWRA is the repository for the documents contained in the WRI where source materials will be maintained as a discrete collection so that it can be systematically added to with the additions tracked over time.

GOAL: Achieve coordinated efforts between and among jurisdictional entities, regulatory entities, community groups, residents, and other individuals in the watersheds to manage watershed resources in the most effective manner transcending political boundaries and protecting property rights.

OBJECTIVE 1: Bring regulatory and jurisdictional entities together in conversation with local watershed users through "roundtable" discussions to develop cooperative guidelines, achieve common goals and exchange perspectives for the management of watershed resources and protection of water quality.

OBJECTIVE 2: Achieve improved and effective working relationships by determine appropriate nexus for partnerships to obtain funding in support of these roundtables.

Implementation 2A: Function and Objectives of proposed Roundtables:
Each of the roundtables is proposed as an implementation measure and could integrate with others as cross-over of issues becomes important and individual liaisons are no longer adequate for collaboration. Roundtables could function to:

- Identify roles and responsibilities for managing the watersheds cooperatively, for the purpose of protecting water quality and watershed uses.
- Develop and implement cooperative guidelines that commit the agencies to a formal cooperation leading to a comprehensive public process.
- Ensure cooperative guidelines will achieve common goals using common terminology.
- Explain and understand regulatory mandates, jurisdictions of each entity, and existing laws
- Host community forums to gather concerns and explain cooperative guidelines
- Provide a forum for project proponents to explain projects and potential watershed and water quality impacts
- Develop liaison relationships with other roundtable groups to share information and coordinate as needed
- Conduct education and outreach to the community (Example: develop Watershed Stewardship Guide modules for use by all watershed users).
- Discuss methods for the cooperative management of watershed uses and resources and the prevention of point and nonpoint source pollution
- Review and incorporate technical information provided by scientists and engineers

Implementation 2B: Inter-County Task Force on land use and water resources planning:
Staff of appropriate county departments and elected officials work to identify opportunities for coordination and resolve existing or potential future conflicts related to watershed management, water quality protection, and water supply issues.

Develop goals, strategies and actions that each county can agree to by taking the following cooperative steps:

- Clearly identify roles and responsibilities for effective management of Nacimiento Reservoir and the surrounding lands.
- Each county lists their needs related to the watersheds;
- Overlay each county General and Specific Area Plans and Elements along with its land use and grading ordinances, Integrated Regional Water Management Plans and Stormwater Management Plans, etc for the watersheds. Identify operational gaps or unnecessary overlaps and discuss alternatives. Example: a cooperative effort to correlate land use designations between the two counties took place to develop the GIS data for this Nacitone plan.
- Discuss disagreements or miscommunications regarding each jurisdictional entity's role and responsibility

Topics that could be addressed by this group: Preventing nonpoint source pollution; design standards for roads and culverts in the watersheds proper marina and dam operations, etc.

Implementation 2C: Water Quality Monitoring & Information Exchange:
Increase opportunities for coordination among the various groups conducting water quality monitoring in the watersheds through development of common protocol and sharing of data. Compile an inventory of monitoring efforts noting frequency of sampling, parameters, and locations. *See the Water Quality Monitoring goals and objectives section for more specifics.*

Implementation 2D: Recreation roundtable:
Expand the existing information exchange between Monterey County Park Rangers and watershed residents on enforcement issues to include Monterey County Water Resources Agency (MCWRA) and the Nacimiento Regional Water Management Advisory Council (NRWMAC) to:

- Address invasive species threat and work with counties to coordinate prevention efforts
- Provide updates on the water projects (Salinas Valley Water Project and the Nacimiento Water Project);
- Provide more timely reservoir release schedule information;
- Update county entities on study of alternative release scenarios;
- Keep county informed on issues or conditions related to recreational use of the reservoirs.
- Address water quality impacts of recreational activities

Implementation 2E: Livestock grazing roundtable
Bring together private and public owners/operators of grazing lands to discuss their various livestock grazing goals and develop options consistent with common goals for water quality protection. Encourage involvement of other interested parties. A first step might be to evaluate the possibility of developing a coordinated grazing program for both watersheds in order to stimulate positive, working relationships with local land and livestock owners. Possible steps are:

- Develop livestock grazing options consistent with common goals
- Inventory the available grazing acreage and steps that would need to be taken to expand that acreage.

- Evaluate the options
- Implement the options in a cooperative agreement committing agencies to an open public process.

Implementation 2F: Neighborhood Road Associations

Groups of residents along county or non-county roads meet to determine short and long-term goals and objectives and take cooperative actions such as periodic clean-ups. Support to these groups could be provided through Resource Conservation District and/or Natural Resources Conservation Service programs. These groups could provide community support to RCDs/NRCS or county departments in seeking funds to conduct road improvement projects. These associations could also be community forums for learning about other issues such as fire management, water quality protection practices, etc.

- **Review county design standards for roads and culverts**
- **Review Low Impact Development methods for roads and proper installation and maintenance of culverts**
- **Identify and plan for the management of roadside vegetation where needed**
- **Conduct roadside clean-ups**

Implementation 2G: Invasive Species Roundtable

Aquatic: This would be a formalization of the existing cooperative efforts taking place between the two counties and with the Department of Fish & Game, residents, and visitors to prevent the invasion of Quagga/Zebra mussels into Nacimiento and San Antonio Reservoirs.

Terrestrial: This group would work in conjunction with the county Weed Management Areas to coordinate activities and funding to eradicate invasive plant species and animal species as needed.

OBJECTIVE 3: Continue the Nacitone Watersheds Steering Committee by seeking funding and contracting with a watershed coordinator/grant writer.

ISSUE 8 – Watershed Health: Plants & Animals

ISSUE:

The ecological interactions among plants, animals and the physical environment are integral to the maintenance of water quality and watershed uses. As the watersheds experience changes through development, ecological interactions may be impaired as habitats are altered. Woodlands for example provide important soil production and water retention services vital to the recharge capability of the local hydrology. They also provide important habitats for possible threatened species dependent upon them. The available documentation on the biota of the watersheds is almost entirely from federal lands. There is a need to inventory and track cumulative impacts to the watershed to ensure that water quality and watershed uses are not impaired.

STATUS and REFERENCES:

According to several studies between 1991 and 1997 (Pavlik et al.) the presence of oak trees increases soil productivity and may enhance water quality, forage quality, species diversity, and wildlife habitat. Both Monterey and San Luis Obispo counties have existing ordinances to protect oak trees. The US Forest Service has designated an area in the upper San Antonio watershed as the Valley Oak Research Natural Area since it contains the last stand of Valley Oak savannah on National Forest land. This area is open for scientific study on a multitude of topics including why there has been poor oak tree regeneration. The designation of this research area does not change any uses of the land.

The Blue Oak Woodland habitat of FHL comprises about 32% of the installation. It occurs in pure stands and in open savanna communities. Blue oak is the most frequently recorded and dominant species in all three types of blue oak communities.

The Nacimiento Reservoir is home to at least three of multiple active bald eagle nesting sites on the Central Coast. It also has a viable large and smallmouth bass population and is the only reservoir in California stocked with white bass. The Nacimiento River watershed has habitat that is capable of supporting the California Tiger Salamander. The Nacimiento River below the dam is listed as a steelhead river.

The San Antonio reservoir is one of the largest eagle winter habitats in Central California. Over 60 eagles, both bald and golden, have been counted around the reservoir. The upper San Antonio watershed is a nesting site of the protected California condor with a range from the Pacific Ocean to the Pinnacles National Monument. The Department of Fish and Game is responsible for enforcing a current no-lead bullet law within Condor habitat pursuant to Assembly Bill 821 enacted into law in 2007 establishing section 3004.5 of the Fish and Game Code relating to Ammunition Certification for big game and nongame bird and nongame mammal hunting in Condor Range. The ultimate purpose of using ammunition and projectiles certified to contain no lead is to ensure that hunters are not exposing condors to secondary lead poisoning.

San Antonio reservoir has a variety of fish species with catfish and largemouth bass being two of the most popular amongst fishermen. The San Antonio watershed provides habitat for several species designated as either threatened or endangered by the U.S. Fish and Wildlife

Service including the endangered Arroyo Toad, San Joaquin Kit Fox and the threatened California Tiger Salamander.

Vernal pools, which are seasonal wetlands, are also found in the San Antonio watershed and provide habitat for species like the California Tiger Salamander. Statewide, over 90% of these small, valuable and threatened vernal pool ecosystems have already been lost. The San Antonio Valley contains 84 mapped pools in areas with vehicle and ground disturbance limitations or they are located in Fort Hunter Liggett Sensitive Resource Protection Areas (SRPs). (Additional information about resource protections in place is contained in Part 4: Jurisdictional and Existing Regulatory Framework).

Goal: Maintain ecological and watershed functions that support water quality by increasing awareness of all stakeholders

Objective 1: Establish scientific basis for recognizing cumulative impacts to watershed health.

Coordinate with private and public land owners/managers, Camp Roberts, Fort Hunter Liggett, Los Padres National Forest, RCDs, county planning staff, county Agricultural Commissioners' Weed Management Area efforts to do the following:

Implementation 1A: Identify suitable models for tracking and calculating cumulative impacts of human activity and natural changes upon plant and animal communities.

Implementation 1B: Develop and maintain an inventory of plants and animals in these watersheds.

Implementation 1C: Provide biological surveys on lands owned by parties interested in scientifically documenting the present status as part of the above-mentioned inventory.

Implementation 1D: Recognize the effectiveness of Monterey County's oak tree ordinance and work with San Luis Obispo county landowners and planners to determine possible protection needs in Nacitone watersheds in that county.

Objective 2: Establish outreach and education programs to protect watershed health.

Implementation 2A: Support entities responsible for enforcing the use of non-lead bullets for hunting in the watersheds by distributing information on the law and the effects of lead bullets on wildlife, especially California condors, and upon people if animals shot with lead bullets are consumed.

Implementation 2B: Develop and provide, to interested landowners, balanced information about the Williamson Act, conservation easements and projects proposed by land trusts. This information would hi-light the legal commitment on the part of the landowner; types of conservation easements; and options for negotiating allowable activities on any contemplated conservation easement.

Implementation 2C: Foster and support a stewardship ethic among watershed users by incorporating information on all of the above into a "Watershed Stewardship Guide" module within a series of guides. This module might be named for the title of this section, *Watershed Health: Plants & Animals* and would be developed in coordination with Monterey County Parks and other appropriate entities.

Implementation 2D: Encourage and support local communities to pass to younger generations the importance of protecting watershed uses and watershed resources.

Implementation 2E: Provide factual information to make the public aware of how a "wild and scenic" designation under the federal Wild and Scenic Rivers Act affects public and private lands along the north and south fork of the San Antonio River through the Ventana Wild and Scenic Rivers Proposal and the Final Environmental Impact Statement for the Southern California Forest Plan Revisions.

Figure 43. Oak Woodlands on USFS grazing alottment in San Antonio Valley

(This page intentionally left blank)

ISSUE 9 – Roads & Culverts

ISSUE:

Roads have been identified as a major source of water pollution in watersheds throughout the United States. In addition to water quality impacts, poorly built roads result in higher maintenance costs to landowners, can cause significant property damage and can be less safe than properly built roads. Some roads and culverts in these watersheds were built or designed to handle less runoff than they are receiving and are therefore in need of re-design and/or more regular maintenance.

STATUS and REFERENCES:

Erosion and resulting sedimentation is a natural process often accelerated by human activities. Excessive sedimentation clouds water, which reduces the amount of sunlight reaching aquatic plants; covers fish spawning areas and food supplies; and clogs the gills of fish. In addition, other pollutants such as phosphorus, pathogens and heavy metals are often attached to the soil particles and end up in downstream water bodies.

A significant but manageable source of erosion and sedimentation in most watersheds is roads. Paved and unpaved roads exist throughout the upper, mid and lower Nacitone watersheds both on private and public land. Road and culvert design, construction, and maintenance practices, if not well planned, can concentrate water, causing accelerated erosion and possibly road washouts sending sediment downstream.

Unpaved roads can generate more sediment than paved roads and are higher priorities for design, construction and maintenance to minimize erosion. There are unpaved roads in all portions of these watersheds. The largest amount of unpaved roads occurs on the two military installations. However, there are areas throughout the two watersheds on both private and public lands with higher road densities than the averages listed in figure 40. In a 2001 study of erosion sources, Lewis Et. Al (California Agriculture 55(4):32-8) found that roads were a larger sediment source on ranches than grazing.

A brief assessment of roads was conducted by the MCWRA for this watersheds plan. The assessment consisted of two parts. The roads of both watersheds were assessed using GIS and roads on MCWRA land were assessed by the US-LS RCD.

The GIS assessment found many old roads and firebreaks that do not appear to have been used for many years, and appear to be possible sources of sediment to stream channels in both watersheds. Data sets were created to calculate the number of linear miles of roads. Road surface material and ownership classification as either public agency or private roads was also collected. Ground truthing was limited and was only done on a few easily accessible roads. The two watersheds contain a little over 2,300 linear miles of roads. There are 315.3 miles of paved roads and 1,985.8 miles of dirt roads and fire breaks that exist in these two watersheds. Given a watershed area of 705.3 square miles, this yields a road density (linear miles of road per square mile of area) of 3.26.

In addition to MCWRA analysis of roads, the US-LT RCD visited the eight agency leases and did a quick assessment of road impacts. The RCD determined that the Tank Road (or "Tank Trail") and ranch roads on MCWRA parcels around both reservoirs are potentially significant sources of erosion and sedimentation into the reservoirs that could have negative water quality impacts. Both military facilities in the Nacitone have easements to use the Tank Road which is owned by MCWRA and is an important route between the two facilities.

Existing Road Infrastructure

	Total (linear miles)	Paved Roads (miles)	Dirt Roads & Fire Breaks (miles)	Road Density (square miles)
Both Watersheds	**2,301.2**	**315.3**	**1,985.8**	**3.26**
San Antonio River Watershed	1,272.3	183.5	1,088.8	3.70
Nacimiento River Watershed	1,028.9	131.8	897.1	2.84

Source: MCWRA, 2008

Figure 44. Existing Road Infrastructure

culverts and developing a plan to reduce their negative impacts. Such surveys have been done in many other watersheds using aerial maps and field work to ground truth locations of highly erodible soils, steep slopes, and other conditions to prioritize roads for upgrade, maintenance, or re-routing.

GOAL: Maintain or enhance water quality and watershed health by minimizing accelerated erosion resulting from roads and culverts in these watersheds.

Objective 1: Fund the development of a roads survey through a coordinated effort among the two counties, military, and forest service staff and willing private landowners. Include in this project the development of a watershed-specific guidebook and workshop for private contractors, landowners, and staff of public entities.

Implementation 1A: Request that the two counties evaluate current design standards for roads and drainage structures to ensure they are sufficient to protect water quality in these watersheds and that these standards are provided to contractors, developers, and landowners in a clear and understandable format.

Implementation 1B: Seek funding to conduct road system surveys, prioritize potential problem areas, and prepare projects to be "ready for implementation" as funding becomes available.

Objective 2: Rebuild, properly maintain, and repair existing roads and prudently develop and build any new roads.

Implementation 2A : Provide road and culvert design, construction and maintenance educational materials and/or workshops for private contractors and landowners / land managers using already developed materials such as the "Handbook for Forest and Ranch Roads" by Pacific Watershed Associates for private roads.

Implementation 2B: Seek funding to conduct a focused survey on the Tank Road which runs from Fort Hunter Liggett to Camp Roberts and passes over MCWRA land on the north shore of the San Antonio reservoir. The survey and proposed upgrades to the road should be developed in a coordinated effort among the MCWRA, the RCD, the U.S. ARMY and the California National Guard at Camp Roberts.

Implementation 2C: Encourage landowners to seek technical assistance from various agencies, private consultants, or groups such as the Natural Resources Conservation Service (NRCS) and the Resource Conservation Districts (RCDs) to minimize accelerated erosion resulting from roads and culverts on their private lands. Ensure landowners are aware of cost-share, incentive programs that may be available for road improvement projects.

Implementation 2D: Encourage the US Forest Service to develop a management plan for the Milpitas Special Interest Area that addresses unauthorized/unclassified (non-system) roads on their lands in that area. (A map of these roads is included in Appendix J).

Figure 45. Dirt road on MCWRA property
(Source: MCWRA, 2006)

(This page intentionally left blank)

ISSUE 10 – Education & Outreach

ISSUE:

Information about existing conditions within these watersheds, watershed functions, how human uses can affect water quality and how we can protect the watersheds are important for everyone living in, working in, and visiting these watersheds.

GOAL: Increase the awareness and understanding of water quality, watershed uses, and watershed functions by those living in, working in, and enjoying the watersheds.

Objective 1: Work with other entities and their existing publications to ensure there are effective materials and programs made available to all watershed users.

Implementation 1A: Develop a catalogue of existing printed material and websites that are available for watershed residents and visitors with information on the following: (this list is not intended to be exhaustive and will be added to over time).

- How to identify methamphetamine labs, marijuana growing sites and who to contact or what to do about them
- Invasive, exotic plant species and plant disease hit list and control measures
- Invasive, exotic insect / animal species hit list and transfer prevention measures
- Shoreline erosion processes – how you can prevent it
- Boat and boating laws
- Information on the prosecution of vandals
- Fire prevention – Cal Fire standards for defensible homes
- The water projects : what, where, why, and how for the Salinas Valley Water Project and the Nacimiento Water Project
- Water conservation measures and new technologies for homeowners and farmers
- Cultural resources – why they are important and how to appreciate them
- Historic resources – biking map with narratives on adobes, classic views, streams, the mission, wineries, etc.
- Plants & Animals of the watersheds
- What is "wild and scenic" and what could it mean to you?
- Ecological diversity and cattle grazing
- Mercury: why should you care? (water, soil, fish tissue, air)
- Trash in streams/lakes: life cycle of a Styrofoam cup
- How to keep petroleum and other pollutants out of streams/lakes
- Septic Safe education – how to use septic-safe household chemicals and soap; doing your own regular inspections
- Stormwater pollution prevention
- Low Impact Development measures for new and significant re-development projects
- Homeowners guide to preventing nonpoint source pollution
- Wildfire prevention
- Fire evacuation plans for humans and animals
- Low Impact or Zero Impact Camping

Implementation 1B: Encourage and support local communities to pass to younger generations the importance of protecting watershed uses and watershed resource through schools, farm days and 4H. *(**Note:** Annual "Farm Day Experience" events have occurred in King City for approximately the past 10 years. This event hosts 1,000s of third graders to learn about farming, ranching, and the resources they depend upon).*

Implementation 1C: Periodically offer Grazing and Irrigated Ag Water Quality Short Course as a cooperative program of the UC Cooperative Extension Services, Farm Bureau, RCDs, NRCS and the MCWRA.

ISSUE 11 – Invasive Species

ISSUE:

Non-native exotic species have historically entered these watersheds. Some exotics are invasive as they rapidly out-compete native species for habitat and can degrade watershed uses. Invasive species threaten the diversity or abundance of native species through competition for resources, predation, and parasitism, interbreeding with native populations, transmitting diseases, or causing physical or chemical changes to the invaded habitat. Through their impacts on natural ecosystems, agricultural and other developed lands, water delivery and flood protection systems, invasive species may also negatively affect human health and/or the economy. Examples of direct impact to human activities include the clogging of navigable waterways and water delivery systems, weakening flood control structures, damaging crops, introducing diseases to animals that are raised or harvested commercially, and diminishing sport fish populations. Management of invasive plants and animals through grazing, cultivation techniques, and physical/chemical eradication methods often occurs in an independent and uncoordinated manner by individual landowners or by land managers within differing jurisdictions.

GOAL: Maintain or enhance water quality and watershed health by increasing cooperative efforts among landowners and managers regarding invasive exotic plants and animals.

Objective 1: Prevent the introduction of invasive species and diseases into the watersheds including the reservoirs (examples: sudden oak death, Quagga/Zebra mussels, giant bamboo, tamarisk, etc.)

Implementation 1A: Encourage interagency cooperation on measures required to prevent the introduction of invasive species.

Implementation 1B: State and local agencies, and resident associations should continue to provide information through informational brochures and signage to incoming boaters and other watercraft users or other recreationalists on the problems associated with specific invasive species, the potential consequences, and how they can help prevent the introduction of these species.

Implementation 1C: Monterey County, San Luis Obispo County and resident associations should work together to develop and implement programs to control invasive species.

Implementation 1D: Provide factual, educational materials about the potential to spread Sudden Oak Death by transporting firewood from areas where the disease occurs, i.e. along the Big Sur coastline.

Implementation 1E: Prevent the entry and spread of exotic and invasive species.

Objective 2: Control the spread of invasive species in the watersheds including the reservoirs (example: yellow star thistle).

Implementation 2A: Encourage landowners and homeowners to control the spread of exotic and invasive plant and animal species.

Implementation 2B: Work with each county's weed management area and the California Department of Fish and Game's Invasive Species Program.

Implementation 2C: Create an open dialog about the use of mechanical and chemical means as well as burning and grazing for controlling noxious weeds, improving habitat and improving the health of the grasslands of the Nacitone watersheds.

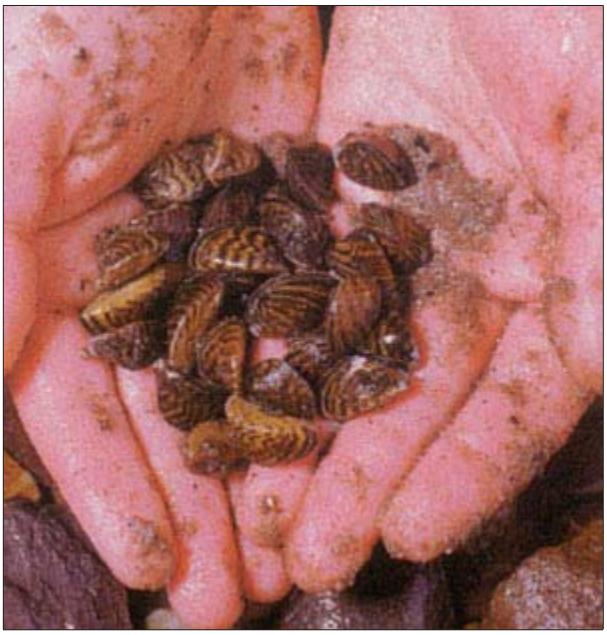

Figure 46. Zebra mussels
(Source: CA Dept. Fish and Game)

E. From recommendation to Action: A Living Plan

The Nacitone Watersheds Management Plan represents a written plan demonstrating an accumulation of facts, figures, and implementation recommendations. Less evident are the myriad relationships that have grown out of the process of stakeholder meetings. The interactivity and relationship building that has occurred will be a critical component of the success and longevity of the plan.

As the Steering Committee reflects on the efforts thus far extended to produce the plan, it has considered the following methods for better ensuring the plans contents are utilized to the fullest extent possible.

Immediate Steering Committee Actions

The Steering Committee has agreed to begin setting into motion the following tasks:

1. Presenting the plan to both County's Boards of Supervisors
2. Identifying subsequent grant opportunities to capitalize on implementation recommendations
3. Configuring a Watersheds Advisory Committee (WAC) which would shepherd the plan forward until such time as a staff position is identified and funded to work with the WAC to support water protection efforts in the Nacitone watersheds.
4. Distributing this plan in coordination with the Monterey County Water Resources Agency
5. Consideration of a user-friendly format for the plan to encourage wider public appeal
6. Facilitating the prioritization and forward momentum of implementation actions. Determining which of the implementations to facilitate and/or implement.
7. Choose a date for the next stakeholders meeting to be convened by the WAC

Method for Plan Distribution

<u>Public Outreach</u>

To the extent possible, Steering Committee members may 'shop the plan around' to groups and associations whose missions have a nexus with the plan. The Steering Committee has been contacting those identified as potential partners for implementation recommendation and will continue to solicit participation in the form of idea exchange and generation of next steps to kick off implementation recommendations.

<u>Targeted Entities</u>

The following groups will receive copies of the plan.

- Technical Advisory Committee members representing jurisdictional agencies in the watersheds
- Representatives of jurisdictional agencies identified in the jurisdictional section of the plan
- Chairpersons of each County Board of Supervisors

- Specific staff members of each County such as Public Works Directors, Planning and Building Department Directors, Reservoir Operations Committee of MCWRA
- People providing public comment
- Steering Committee members
- Members of the public upon request

In addition, the following electronic venues will be used to distribute the plan.

- Nacitone Watershed Group website
- Monterey County Water Resources Agency web site
- Request links on jurisdictional web sites

Strategic Planning

The goals and objectives of this plan may be beneficial starting places for both Counties when they pursue up-dates of General Plan elements relative to these watersheds. Future groups should refer to County General Plans for policies that may support or prevent implementing the Plan's goals and objectives.

Future of the Nacitone Watershed Group Funding

The following is a list of potential strategies for consideration.

1. MCWRA and SLO County Public Works to collaborate on a grant to fund a watershed coordinator.
2. Current watershed group to draft a Memorandum of Agreement (MOA) of potentially involved parties and identify roles and responsibilities of involvement. MOA could be structured to include public agency, local non-governmental organization (NGO), and local sponsoring agency (existing water quality interests) for each county. MOA could be structured to include local, regional, state and federal organizations and agencies that hold a stake in the health of the watersheds. MOA could be structured with signatories' agreement to financially contribute to support a scope of work derived from the MOA.
3. Pursue Supplemental Environmental Projects arising out of RWQCB or other agency violations. For example, Tract 1990 has been levied a fine, some portion of which could be assigned to projects arising out of the NWMP.

Future Plan Updates

As new information on the condition of the watersheds becomes available and new actions to protect and enhance watershed health are agreed upon by stakeholders, the plan could be updated based upon the guidance and direction of the WAC. This plan is not intended to be modified or revised by entities other than a stakeholder or similar group. In addition, as implementation recommendations are acted upon, successes will be accumulated. There will be a need to track the outcomes of the recommendations, monitoring for water quality improvements over the long term.

F. Pending Changes to the Watershed

At this time, the Nacimiento and Salinas Valley Water Projects are being built and will be operational by 2010. A synopsis of both projects is provided below.

Salinas Valley Water Project (SVWP)

The SVWP has several components. Only part of Phase1 would be included in the infrastructure of the Nacitone Watersheds, including spillway modifications to the Nacimiento Dam and re-operation of the reservoirs. Modification of the spillway will increase the capacity of the spillway so it would be able to pass the probable maximum flood (PMF) event. Construction of the Nacimiento Dam spillway modifications include lowering the existing spillway crest approximately twelve feet to an elevation of 788 feet, installing a twelve and a quarter-foot high inflatable rubber dam and raising and strengthening the side walls of the existing spillway chute. Although the maximum capacity of the reservoir would not be altered, larger storm flows can be passed by the spillway. The spillway modification at Nacimiento would allow the MCWRA to're-operate' the reservoir to increase the amount of water stored during the winter and released during the spring and summer months for conservation (i.e., groundwater recharge through the Salinas River bed) and, ultimately, for downstream diversion. The MCWRA currently operates both reservoirs, and although no physical modifications at San Antonio would occur, both reservoirs are operated as a system such that more water would be available for release (SVWP EIR, 2002; SVWP 100% Design Submittal, Boyle Engineering, Feb 2007).

The following significant impacts were found to be unavoidable regarding the SVWP: potential effects on largemouth bass spawning in Nacimiento Reservoir; a reduction in aesthetic values and recreation at the reservoirs; and short-term, construction-related air emissions. The MCWRA Board of Supervisors determined that the benefits of the project overrode the need to avoid those impacts. Therefore, on June 4, 2002, the Board of Supervisors issued a Statement of Overriding Considerations as provided in CEQA Guidelines section 15093 (SWRCB Notice of Petition to Change the Place of Use and Add Points of Diversion 2004).

Nacimiento Water Project

In 1959, San Luis Obispo County Flood Control and Water Conservation District obtained entitlement to 17,500 acre-feet of water per year from Nacimiento Reservoir by an agreement with the Monterey County Water Resources Agency. The project to convey raw water from the reservoir to contracting entities involves a 45-mile pipeline, three tanks, and a multi-port intake facility at the reservoir. Only the intake structure and a small portion of the pipeline lie in the watershed study area. The project is intended to supplement the San Luis Obispo County water supply (SLO County Public Works brochure, 2007). Contracting communities include Paso Robles, Templeton, Atascadero, San Luis Obispo, and County Service Area 10, Benefit Zone A.

(This page intentionally left blank)

Part 4
Jurisdictional and Existing Regulatory Framework

The NACITONE watershed falls under the jurisdiction of many local, state and federal government agencies. In addition, there are numerous non-regulatory entities that exist and have various missions and functions. A first step toward cooperative management of these watersheds across regulatory and non-regulatory entities is to understand the jurisdictions, roles and responsibilities of these entities. The following section gives a brief overview of regulatory agencies and non-regulatory entities that function in one or both of these watersheds.

A. Regulatory Agencies

Regulatory refers to policies that are forms of legal restrictions that are carried out by the government. The following lists regulatory agencies that have jurisdiction within the NACITONE Watershed and which have a substantial regulatory presence.

Federal Agencies

Federal Energy Regulatory Commission (FERC)

Mission: The Federal Energy Regulatory Commission regulates and oversees energy industries in the economic, environmental, and safety interests of the American public.

Authority: The Federal Energy Regulatory Commission is an independent agency that regulates the interstate transmission of natural gas, oil, and electricity, as well as natural gas and hydropower projects. FERC is responsible for licensing and inspecting private, municipal, and state hydroelectric projects. FERC also oversees environmental matters related to natural gas and hydroelectricity projects and major electricity policy initiatives. The Energy Policy Act of 2005 gave FERC additional responsibilities as outlined in FERC's Top Priorities and updated Strategic Plan.

Guiding Document: FERC Strategic Plan

FERC is responsible for all regulations related to dam/spillway safety requirements at Nacimiento Reservoir. The FERC is headquartered in Washington, DC and also has a regional office in San Francisco.

Relevant websites: http://www.ferc.gov/about/about.asp and http://www.ferc.gov/industries/hydropower/safety.asp

National Oceanic and Atmospheric Administration (NOAA) National Marine Fisheries Service

NOAA Fisheries is a division of the National Oceanic and Atmospheric Administration (NOAA).

Mission: Stewardship of living marine resources through science-based conservation and management and the promotion of healthy ecosystems

Authority: Several major statutes or laws form the legal basis for the programs of the National Oceanic and Atmospheric Administration; Coastal Zone Management Act, Endangered Species Act, Magnuson-Stevens Fishery and Management Act, Marine Mammal Protection Act, National Marine Sanctuaries Act.

Enforcement activities are carried out in cooperation with other State and Federal agencies in the Southwest Region to ensure compliance with various federal regulations relating to stewardship of fishery and protected species resources. For example, NOAA Fisheries works locally with the Army Corps permitting process by providing "Biological Opinions" on proposed projects. These opinions describe potential impacts to protected species and contain restrictions and appropriate mitigations that assure protection of these species during project implementation. Private land owners can work with NOAA Fisheries to develop Habitat Conservation Plans in order to obtain incidental take permits under the Endangered Species Act.

Guiding Document: The NOAA Fisheries Strategic Plan contains three goals: rebuilding and maintaining sustainable fisheries, promoting the recovery of protected species, and protecting and maintaining the health of coastal marine habitats.

The NACITONE Watershed is located in the NOAA Fisheries' Southwest Region which includes California, Hawaii, and the Pacific Trust Territories; the headquarters are located in Long Beach, California. The region is responsible for managing fisheries off the coast of California for salmon, ground fish, and anchovies; and/or conducting enforcement, marine mammal and habitat programs to protect fishes, marine mammals and endangered species within the region. The Southwest Region Field Office is located in Santa Rosa, California. The field office's primary purpose is the administration of the Endangered Species Act, particularly the protection of listed salmonids including Coho, Chinook Salmon, and Steelhead Trout. NOAA Fisheries is also responsible for administering the Clean Water Act, Federal Power Act, Fish and Wildlife coordination Act and the Magnuson-Stevens Act.

Relevant websites: http://swr.nmfs.noaa.gov/ and http://www.lib.noaa.gov/noaainfo/heritage/heritage.html

United States Army Corps of Engineers (ACOE)

Mission: The Army Corps of Engineers' missions include five broad areas of water resources, environment, infrastructure, homeland security and warfighting. The water resource mission is 'in support of Nation's interests, build broad-based relationships and alliances to collaboratively provide comprehensive, systems-based, sustainable and integrated solutions to water resources national and international challenges'. The Corps environmental mission has two major focus areas: restoration and stewardship. Efforts in both areas are guided by the Corps environmental operating principles, which to balance economic and environmental concerns.

Authority: The legislative origins of the program are in the Rivers and Harbors Acts of 1890 (superseded) and 1899 (33 U.S.C. 401, et seq.). The Congress of the United States has assigned the U.S. Army Corps of Engineers the responsibility for regulation and construction and other works in the waters of the United States. The Corps is charged with protecting our nation's harbors and navigation channels from destruction and encroachment, and with restoring and maintaining environmental quality. The principal regulatory mechanisms of the Army Corps that relate to watershed enhancement are the Clean Water Act, Section 404(b)(1) Guideline;

Marine Protection; Research and Sanctuaries Act; Endangered Species Act; National Historic Preservation Act; Coastal Zone Management Act; National Environmental Protection Act; and others as they relate to the regulatory actions of the District. Army Corps of Engineers permits are needed for any work done below the ordinary high water mark of a freshwater entity, discussion with an Army Corps of Engineers representative must be done prior to applying for a permit. According to the Army Corps of Engineers website, responsibilities are accomplished by regulating activities in three areas (1) discharge of fill or dredged materials in coastal and inland waters and wetlands; (2) construction and dredging in navigable waters of the United States; and (3) transport of dredged materials for dumping into ocean waters. The Army Corps of Engineers defines Navigable Waters on their website as the following "those waters that are subject to the ebb and flow of the tide and/or are presently used, or have been used in the past, or may be susceptible for use to transport interstate or foreign commerce. A determination of navigability, once made, applies laterally over the entire surface of the waterbody, and is not extinguished by later actions or events which impede or destroy navigable capacity".

Guiding Document: Civil Works Strategic Plan

The NACITONE Watersheds lies within the San Francisco District of the South Pacific Division of the Army Corps of Engineers. The local Army Corps of Engineers office is located in San Francisco, California.

Relevant websites: http://www.spn.usace.army.mil/ and http://www.iwr.usace.army.mil/

United States Bureau of Land Management (BLM)

Mission: The mission of BLM is to "sustain the health, diversity, and productivity of public lands for the use and enjoyment of present and future generations"

Authority: The Bureau of Land Management is responsible for managing all federal lands in the public domain. (http://www.blm.gov/wo/st/en/info/About_BLM.html). BLM was given the charge of multiple-use management by Congress, which is defined as management of public lands and their various resource values so that they are utilized in the combination that will best meet the present and future needs of the American people. There are numerous legislative acts and regulations which apply to BLM lands and can be found at http://www.blm.gov/wo/st/en/info/regulations.html.

Guiding Document: BLM Manual

BLM operates at both the federal and state levels. The following are BLM lands within the Nacimiento and San Antonio River watersheds: Redonda Mountain Sensitive Resource Area, Rocky Butte Botanical Area, Tierra Redonda, and Waterdog Creek. Any action affecting the above stated lands must be reviewed by an interdisciplinary team to determine if they are in conformance with the existing planning base, this includes all current BLM law, executive order, regulation, policy and land use plans. The NACITONE Watershed falls under the jurisdiction of the Bakersfield Field Office.

Relevant websites: http://www.blm.gov/ca/st/en/fo/bakersfield.html

United States Environmental Protection Agency (EPA)

Mission: The EPA gives the following mission statement on its website, "research, standard setting, monitoring and enforcement with regard to five environmental hazards: air and water pollution, solid waste disposal, radiation, and pesticides". Founded in 1970 as an independent agency, the Environmental Protection Agency is generally responsible for protecting human health and safeguarding the natural environment in the United States. While presiding over the entire country, the EPA also coordinates and supports research and pollution mitigation activities by state and local governments as well as private and public groups, individuals and educational institutions.

Authority: The California Environmental Protection Agency is responsible for implementing Federal Acts, such as the Clean Air Act and the Clean Water Act, that align with corresponding State Laws in an effort to streamline the agency's tasks.

Guiding Document: The Pacific Southwest's Strategic Plan (Plan) sets out the Region's goals for the next five years and describes how the EPA intends to achieve a cleaner, healthier environment.

The NACITONE Watershed lies in the US EPA's Southwest Region (Region 9). This region contains Arizona, California, Hawaii, Nevada, and the Pacific Islands and the headquarters are in San Francisco.

Relevant websites: http://www.epa.gov/region09/ and http://www.epa.gov/cfo/plan/plan.htm

United States Fish and Wildlife Service (USFWS)

Mission: The U.S. Fish and Wildlife Service is the principal federal agency for conserving, protecting, and enhancing fish, wildlife, plants, and their habitats for the continuing benefit of the public.

Authority: The Service enforces federal wildlife protection laws such as the Endangered Species Act, and works in consultation with the Army Corps of Engineers to ensure that permitted projects protect fish and wildlife. The Service evaluates impacts and appropriate mitigations for endangered species that may be impacted by proposed projects. When protected species are involved, the Service prepares "Biological Opinions" on the project to assess the potential impacts and restrict potentially harmful activities and also is responsible for issuing any incidental take permits under the Federal Endangered Species Act. In order for an incidental take permit to be issued a habitat conservation plan is required. The issuance of these permits is contingent on the applicant obtaining a State permit.

Fish and Wildlife Service receives authority to engage applicants early in the project planning process and to make any necessary changes to the project, from the Fish and Wildlife Coordination Act, National Environmental Policy Act, and Endangered Species Act. In regards to Military Lands, the Service reviews the specific entity's management of natural resources and provides guidance on endangered species and the management of their critical habitat.

The NACITONE Watershed lies in the Service's Pacific Region (Region #1). This region headquarters is located in Portland, OR and the region contains the states of Washington, Oregon, California, Idaho, Nevada, Hawaii, and the Pacific Islands.

Relevant websites: http://www.fws.gov/pacific/ and http://www.fws.gov/policy/.

United States Forest Service (USFS)

The U.S. Department of Agriculture Forest Service is a Federal agency that manages public lands in national forests and grasslands. The agency was established by Congress in 1905 to provide quality water and timber for the Nation.

Mission: The mission of the USDA Forest Service is to sustain the health, diversity, and productivity of the Nation's forests and grasslands to meet the needs of present and future generations. The Forest Service strives to manage resources under the best combination of uses to benefit the American people while ensuring the productivity of the land and protecting the quality of the environment.

The agency accomplishes its mission through five main activities:

- Protection and management of natural resources on National Forest System lands.
- Research on all aspects of forestry, rangeland management, and forest resource utilization.
- Community assistance and cooperation with State and local governments, forest industries, and private landowners to help protect and manage non-Federal forest and associated range and watershed lands to improve conditions in rural areas.
- Achieving and supporting an effective workforce that reflects the full range of diversity of the American people.
- International assistance in formulating policy and coordinating U.S. support for the protection and sound management of the world's forest resources.

Authority: The Forest Service is responsible for managing national forests for multiple uses and benefits and for the sustained yield of renewable resources such as water, forage, wildlife, wood, and recreation.

Guiding Document: The Forest Service Directive System consists of the Forest Service Manual and Handbooks, which codify the agency's policy, practice, and procedure. The system serves as the primary basis for the internal management and control of all programs and the primary source of administrative direction to Forest Service employees.

The Forest Service is organized into National Forests in ten different regions. The NACITONE Watershed is located within Region 5, Pacific Southwest Region, Los Padres National Forest.

Relevant websites: http://www.fs.fed.us/r5/ and http://www.fs.fed.us/publications/

United States Department of Defense (DoD)

Mission: U.S. Pacific Command, in concert with other U.S. government agencies and regional military partners, promotes security and peaceful development in the Asia-Pacific region by deterring aggression, advancing regional security cooperation, responding to crises, and fighting to win.

The NACITONE watersheds are in the Pacific Command of the DoD.

Relevant websites: http://www.pacom.mil/about/mvp-statements.shtml

State Agencies

State Resources Agency

Mission: To restore, protect and manage the state's natural, historical and cultural resources for current and future generations using creative approaches and solutions based on science, collaboration and respect for all the communities and interests involved.

The Department of Fish and Game, the Department of Forestry and Fire Protection, the Department of Water Resources, and the Department of Boating and Waterways all fall under the direction of the State Resources Agency.

California Department of Fish and Game (CDFG)

Mission: The Department of Fish and Game mission is to manage California's diverse fish, wildlife, and plant resources, and the habitats upon which they depend, for their ecological values and for their use and enjoyment by the public.

Authority: To meet this responsibility, the law requires any person, state or local government agency, or public utility proposing a project that may impact a river, stream, or lake to notify the CDFG before beginning the project. If the CDFG determines that the project may adversely affect fish and wildlife resources, a Lake or Streambed Alteration Agreement (1602 Agreement) is required. The principal enforcement mechanism for the CDFG is the California Fish and Game Code, Section 1602. Exclusions include projects conducted by a governmental agency and permit requirements from the Army Corps of Engineers.

The CDFG is responsible for reviewing the management of natural resources on military lands and provides guidance on federally listed species and the management of their critical habitat. The CDFG currently owns two land allotments adjacent to Camp Roberts which comprise the Big Sandy Wildlife Area which totals 865 acres. The CDFG is responsible for riparian habitats located within both watersheds and with support of USFWS adopted a no-net-loss policy for California riparian habitats.

Guiding Documents: The Fish and Game Strategic Plan emphasizes the directions CDFG needs to establish and follow to meet future challenges. It does not describe all of the things the Department currently does. The Fish and Game code identifies the agency's enforcement and regulation purview.

The NACITONE Watershed is located within CDFG's Central Region, a region that includes Fresno, Kern, Kings, Madera, Mariposa, Merced, Monterey, San Benito, San Luis Obispo, Stanislaus, Tulare and Tuolumne counties. The region's main office is located in Fresno, California and there is a local office in San Luis Obispo.

Relevant websites: http://www.dfg.ca.gov/regions/4/ , http://www.dfg.ca.gov/about/resource-mgmt.html and http://www.dfg.ca.gov/habcon/1600/

California Department of Forestry and Fire Protection (CAL FIRE)

Mission: The Department of Forestry and Fire Protection "protects the people of California from fires, responds to emergencies, and protects and enhances forest, range, and watershed values providing social, economic, and environmental benefits to rural and urban citizens" (http://www.fire.ca.gov/). A majority of the CAL FIRE workforce responds to all types of emergencies.

Authority: CAL FIRE crews and equipment are responsible for the protection of over 31 million acres of California's privately-owned wildlands. In addition, they provide emergency services of all kinds within 36 of California's 58 counties through local government contracts (http://www.fire.ca.gov/).

CAL FIRE's Resource Management Program strives to protect California's natural resources including 85 million acres that are classified as wildlands. These wildlands provide the state with timber, watershed, wildlife habitat, and recreation resources. The goal of the CAL FIRE Resource Management Program is to maintain the sustainability of all these natural resources. The Department achieves this goal by "administering state and federal forestry assistance programs for landowners, demonstrating sound management practices on eight demonstration state forests, enforcing the California Forest Practice Act on all non-federal timberlands, providing research and educational outreach to the public on forest pests, and coordinating efforts for fuel reduction to reduce the risk of fire and improve the quality of California ecosystems" (http://www.fire.ca.gov/).

Guiding Documents: The California Fire Plan is the state's road map for reducing the risk of wildfire. By placing the emphasis on what needs to be done long before a fire starts, the Fire Plan looks to reduce fire fighting costs and property losses, increase firefighter safety, and to contribute to ecosystem health.

San Luis Obispo County (CDFSLO)

The California Department of Forestry and Fire Protection has provided fire protection for the County of San Luis Obispo by cooperative agreements since 1929. Cal Fire/San Luis Obispo County 's mission is "t**o serve and safeguard the community from the impacts of fire, emergency injury and illness, and other physical dangers by providing emergency fire/ rescue response, public education, planning, and prevention for the County of San Luis Obispo and its residents".**

CDFSLO has two fire stations within the NACITONE Watershed; the Heritage Ranch Fire Station in Paso Robles and the Oak Shores Fire Station in Bradley.

Relevant websites: http://www.cdfslo.org/ and http://www.fire.ca.gov/communications/communications_factsheets.php

Department of Water Resources (DWR)

Mission: The Department of Water Resources provides dam safety and flood control services, assists local water districts in water management and conservation activities, promotes recreational opportunities, and plans for future statewide water needs. The DWR also operates and maintains the State Water Project, including the California Aqueduct. The mission of the

Division of Flood Management is to prevent loss of life and reduce property damage caused by floods, and to assist in recovery efforts following any natural disaster.

Authority: California Water Code, Sections 10004-10013.

Guiding Document: California Water Plan provides a framework for water managers, legislators, and the public to consider options and make decisions regarding California's water future. The Plan, which is updated every five years, presents basic data and information on California's water resources including water supply evaluations and assessments of agricultural, urban, and environmental water uses to quantify the gap between water supplies and uses. The Plan also identifies and evaluates existing and proposed statewide demand management and water supply augmentation programs and projects to address the State's water needs.

The NACITONE Watershed falls within two districts of the DWR: the Upper Salinas Groundwater Basin is under the San Joaquin District's jurisdiction and the Paso Robles Groundwater Basin is within the Southern Coast Jurisdiction.

Relevant websites: http://www.sjd.water.ca.gov/ and http://www.dpla.water.ca.gov/sd/index.html

Division of Safety of Dams (DSOD)

The Division of Safety of Dams was created by the State Legislature in 1929 under the California Department of Water Resources. The mission of the Division of Safety of Dams is t**o protect people against loss of life and property from dam failure. The California Water Code entrusts this regulatory power to the Department of Water Resources which delegates the program to the Division of Safety of Dams.** Division engineers and engineering geologists review and approve plans and specifications for the design of dams and oversee their construction to insure compliance with the approved plans and specifications. The dams at both the Nacimiento and San Antonio Reservoirs are inspected yearly by the DSOD. The Division of Safety of Dams main office is located in Sacramento, California and the dams at both the Nacimiento and San Antonio Reservoirs fall into the Central Region for Field Engineering.

Relevant websites: http://www.water.ca.gov/damsafety/ and http://www.water.ca.gov/damsafety/FAQuestions/index.cfm

Department of Boating and Waterways

Mission: To provide safe and convenient public access to California's waterways and leadership in promoting the public's right to safe, enjoyable, and environmentally sound recreational boating.

Authority: In 1959, the State Legislature, under authority of the Federal Boating Act of 1958, added Chapter 5 to Division 3 of the Harbors and Navigation Code. This act provided for the registration of most undocumented vessels by the State. It also established a comprehensive set of State laws and regulations governing the equipment and operation of vessels on all waters of the State. Since then the Departments responsibilities have grown.

Guiding document:

Relevant website: http://www.dbw.ca.gov/ and http://www.dbw.ca.gov/Environmental/

Regional Water Quality Control Board (RWQCB)

The Regional Water Quality Control Board is the local administrative unit of the State Water Resource Control Board.

Mission: The mission of the RWQCB is to develop and enforce water quality objectives and implementation plans that will best protect the beneficial uses of the State's waters. Each RWQCB has nine part-time Board members appointed by the Governor and confirmed by the State Senate. RWQCB's are responsible for developing "basin plans" for their hydrologic areas, governing requirements, issuance of waste discharge permits, enforcement actions against violators, and monitoring water quality.

Authority: The focus of the RWQCB is water quality; the Clean Water Act is the primary enforcement tool. The RWQCB also maintains the State's 303 d. list of impaired water bodies (section 303 d. of the Clean Water Act). When a water body is listed on the 303 d. list, regional offices prepare studies and remediation plans to bring water quality within the State's standards and to reduce the Total Maximum Daily Loads to acceptable levels.

The RWQCB becomes involved in watershed enhancement projects as part of Section 401 of the Clean Water Act. The Board works in coordination with the Army Corps of Engineers to issue compliance documents for this section of the CWA. The RWQCB has a bulk of the regulatory responsibility for the cleanup of releases from military facilities.

The RWQCB recently modified discharge permits associated with irrigated agriculture requiring landowners and farm operators to enroll in the Conditional Ag Waiver program which requires the development and implementation of a farm water quality management plan for the reduction of water quality impacts. The RWQCB is currently enrolling landowners and farm operators in the program.

The California Water Code provides regulatory guidance.

Guiding Documents: Central Coast Basin Plan

State Defined Designated Beneficial Uses for Water Quality

RWQCB Basin Plans identify the designated beneficial uses for water bodies within each hydrologic basin and the water quality objectives (stated as physical and/or chemical parameters) to be achieved or maintained to protect each beneficial use. Beneficial uses for a particular water-body include municipal, agricultural and industrial supply, power generation, recreation, aesthetic enjoyment, navigation and preservation, and enhancement of fish, wildlife and other aquatic resources.

The Central Coast Region Water Quality Plan (Basin Plan), adopted by the Regional Water Quality Control Board (RWQCB) in 1989 and approved by the state board in 1990, defines beneficial uses for water bodies in the Central Coast, defines water quality objectives to protect these uses, and outlines implementation and monitoring plans. Amendments to the Basin Plan were approved by the RWQCB on February 11, 1994 and September 8, 1994.

The state defines pollution as impairment to beneficial uses in terms of the physical, chemical, or biological characteristics of water. There is also an "anti-degradation" directive in both state and federal law. EPA requires a biennial water quality assessment that describes the level to

which a water body can support its designated beneficial uses: fully supporting, fully supporting but threatened, partially supporting and not supporting (Range Water Quality Management Plan 1995).

When activities occur that adversely impact water quality and a beneficial use is no longer being supported, remediation actions may occur to restore beneficial uses. One way to approach goals and strategy development is to consider what actions could be planned to preserve or restore impacted beneficial uses. Those actions could be configured into a strategy to preserve/ restore beneficial uses. The Regional Water Quality Control Board has also removed designated beneficial uses for particular water bodies. This happens in rare instances when it is determined that the beneficial use is no longer appropriate for that water body.

The Central Coast Basin Plan provides a list of designated beneficial uses for many of the water bodies in these two watersheds.

None of the rivers in the watershed have beneficial use designations of aquaculture (AQUA), estuarine habitat (EST), marine habitat (MAR), inland saline water habitat (SAL), preservation of biological habitats of special significance (BIOL), shellfish harvesting (SHELL) or areas of special biological significance (ASBS).

Relevant websites: http://www.swrcb.ca.gov/rwqcb3/index.htm and http://www.swrcb.ca.gov/rwqcb3/WMI/Index.htm

Office of Environmental Health Hazard Assessment (Cal/EPA)

Mission: To protect and enhance public health and the environment by scientific evaluation of risks posed by hazardous substances.

Authority: The Department is responsible for developing and providing risk managers in state and local government agencies with toxicological and medical information relevant to decisions involving public health.

Guiding Document: OEHHA's Strategic Plan
Relevant websites: http://oehha.ca.gov/about/description.html and http://oehha.ca.gov/fish.html

California National Guard

Mission: The California Army National Guard organizes, trains, equips, and resources community based land forces. On order, mobilizes to support state and/or federal authority.

Authority:

Guiding Document: California National Guard Strategic Plan

Relevant websites: http://www.calguard.ca.gov/Pages/default.aspx

Local Agencies

The primary local resource agencies related to watersheds jurisdiction are included. In addition, the following local agencies may be involved in the protection of water quality and watershed health but are not further described in this section: county agriculture commissioner offices, county health departments, cooperative extensions and law enforcement agencies and departments.

Monterey County Parks Department

Mission: The Monterey County Parks Department maintains stewardship over a system of county parks. These outdoor recreation resources are managed to preserve, promote, and interpret the natural, historical, and cultural values of Monterey County. They are operated to provide opportunities for the public's enjoyment, inspiration, education, personal development and cultural enrichment.

Relevant websites: http://www.co.monterey.ca.us/parks/nacimiento.html and http://www.co.monterey.ca.us/parks/sanantonio.html

Monterey County Resource Management Agency - Planning and Building Services Departments

Mission: The Mission of the Resource Management Agency – Planning and Building Services Department is to efficiently process planning permits, provide quality long-range planning and consistently develop and administer land use policies.

Authority: California state law requires each city and county to adopt "a comprehensive, long-term general plan for the physical development of the county or city, and any land outside its boundaries which bears relation to its planning" (Government Code section 65300).

Guiding Document: Monterey County's General Plan identifies standards and programs for the development of unincorporated areas.

A majority of the NACITONE watershed falls within the South County Planning Area which has its own set of development standards and regulations with the South County Area Plan. Lands surrounding the San Antonio Reservoir are designated within the Monterey County General Plan as Public/Quasi-public and Rural Grazing, with smaller surrounding areas designated as Farmlands and Permanent Grazing. A small area north of the San Antonio Reservoir is designated for Rural Residential use with a minimum of 5 acres per unit. The NACITONE Watershed is partially located in unincorporated Monterey County.

General Plan (2006)

The General Plan is currently being updated.

Relevant websites: http://www.co.monterey.ca.us/rma/services.htm and http://www.co.monterey.ca.us/planning/gpu/draftNov2007/default.htm

County of San Luis Obispo, Planning and Building Department

Mission: The Planning and Building Departments mission is 'promoting the wise use of land helping to build great communities.'

Authority: California state law requires each city and county to adopt "a comprehensive, long-term general plan for the physical development of the county or city, and any land outside its boundaries which bears relation to its planning" (Government Code section 65300).

Guiding Document: The San Luis Obispo County General Plan expresses the county's development goals and embodies public policy relative to the distribution of future land uses. It identifies county's land use, circulation, environmental, economic, and social goals and policies as they relate to land use and development.

Part of the NACITONE Watershed is located within unincorporated San Luis Obispo County, and falls within the area covered by the Nacimiento Area Plan. The County's General Plan identifies standards and programs for the development of unincorporated areas and the Nacimiento Area Plan provides specific development regulations for the area. Lands surrounding Nacimiento Reservoir are for the most part designated as Agricultural and Open Space within the SLO County General Plan. Land uses adjacent to the reservoir primarily include Rural Residential, Recreation, Agriculture, and Open Space, with some Residential Suburban.

Conservation Element

This element is in the process of an update initiated in 2006. There is an existing Conservation Element included in the "Environment Plan" from 1974. The draft plan is scheduled to be released in October 2008 with Planning Commission hearings in February 2009 and Board of Supervisors hearings in August 2009.

Relevant websites: http://www.slocounty.ca.gov/planning.htm and http://www.slocounty.ca.gov/planning/General_Plan__Ordinances_and_Elements.htm

County of San Luis Obispo, Public Works and Transportation Department

Provides public services related to the safe and efficient movement of traffic on the 1,310 miles of County maintained roadways; engineering and surveying review of proposed land development; administration and operation of various water and waste water wholesale and retail facilities, including the Nacimiento Water Supply and Los Osos Waste Water Projects; long term master water planning; franchise administration for the unincorporated areas. The Public Works Department is also responsible for managing the County's Storm Water Management Program. The San Luis Obispo County Water Quality Laboratory is part of the Utilities Division of the Public Works Department.

Relevant websites: Website for SLO Co. PWD: http://www.slocounty.ca.gov/PW.htm
Website for Nacimiento Water Project: http://www.slocounty.ca.gov/PW/NacWP.htm

B. Legal regulatory Framework

California Environmental Quality Act (CEQA) is the foundation of environmental law in California; it strives to protect all aspects of the environment through thorough analysis. CEQA requires state and local agencies to prepare Environmental Impact Reports for most projects. These reports are then analyzed and used to make decisions about the severity of the impacts on the environment. CEQA also requires that mitigation measures are identified for all impacts. If an action is identified as a project an Initial Study is required, after analysis of the initial study occurs the decision is made to either make a Negative Declaration of environmental impacts or to prepare an Environmental Impact Report. If impacts are found mitigation measures and project alternatives must be discussed. The responsible agency can decide to go forward with a project despite environmental impacts with a Statement of Overriding Consideration, which explains why the benefits of a project outweigh the environmental impacts.

National Environmental Protection Act (NEPA) is the federal law that requires all federal agencies to prepare Environmental Impact Statements for actions that have a significant impact on the environment. NEPA is also a model for several policies at the state level, including CEQA. Environmental Impact Statements are very similar to EIRs and require that any environmental impacts be identified as well as creating mitigation measures to address the impacts.

Clean Water Act (CWA) is the cornerstone of surface water quality protection in the United States. (The Act does not deal directly with ground water or with water quantity issues.) The statute employs a variety of regulatory and non-regulatory tools to sharply reduce direct pollutant discharges into waterways, finance municipal wastewater treatment facilities, and manage polluted runoff. These tools are employed to achieve the broader goal of restoring and maintaining the chemical, physical, and biological integrity of the nation's waters so that they can support the protection and propagation of fish, shellfish, and wildlife and recreation in and on the water.

The Porter-Cologne Water Quality Control Act establishes the State Water Resources Control Board and each Regional Water Quality Control Board as the principal State agencies for having primary responsibility in coordinating and controlling water quality in California.

C. Resources Agencies - Non-Regulatory Entities

Non-regulatory entities can operate on the Federal, State and Local levels and are designed to perform necessary functions that do not involve direct policy. These entities do not enforce laws. Their focus is generally on education, voluntary landowner participation, and landowner assistance.

Federal Agencies

National Oceanic and Atmospheric Administration (NOAA) Restoration Center

The National Oceanic and Atmospheric Administration perform many non-regulatory tasks through its Restoration Center which plans, implements, and funds coastal restoration projects throughout the United States.

Mission: The NOAA's website identifies that the Restoration Center's mission is to "enhance living marine resources to benefit the nation's fisheries by restoring their habitats". The NOAA Restoration Center accomplishes its mission by restoring degraded habitats, advancing the science of coastal habitat restoration, transferring restoration technology to the private sector, the public and other government agencies and by fostering habitat stewardship and conservation ethics.

Three primary programs allow the Restoration Center to restore fisheries habitat. The first is the Community-based Restoration Program which takes a grass-roots approach to restoration and engages communities to participate in hands-on local habitat restoration projects. The second program is the Damage Assessment Remediation and Restoration Program, which brings in scientists and managers after oil spills, toxic releases, or ship groundings to restore injured marine resources. The Restoration Research Program works to advance new science and technology within the restoration field.

Relevant websites: http://www.nmfs.noaa.gov/habitat/restoration/

Natural Resources Conservation Service (NRCS)

Originally called the Soil Conservation Service, the Natural Resources Conservation Service was established in 1935 and has provided leadership in a partnership effort to help America's private land owners and managers conserve their soil, water, and other natural resources.

Mission: The NRCS has six mission goals: high quality and productive soils, clean and abundant water, healthy plant and animal communities, clean air, adequate energy supply, and working farms and ranchlands. In order to achieve these goals, the NRCS implements the following strategies:

- Cooperative conservation: seeking and promoting cooperative efforts to achieve conservation goals.
- Watershed approach: providing information and assistance to encourage and enable locally-led, watershed-scale conservation.
- Market-based approach: facilitating the growth of market-based opportunities that encourage the private sector to invest in conservation on private lands.

Service offices serving the Nacitone watersheds are located in Templeton and Salinas.

Relevant websites: http://www.ca.nrcs.usda.gov/

United States Fish and Wildlife Service (USFWS) Partners for Fish and Wildlife Program

The United States Fish and Wildlife Service participates in a cooperative conservation program called Partners in Wildlife.

Mission: The Program's mission is to efficiently achieve voluntary habitat restoration on private lands, through financial and technical assistance, for the benefit of Federal Trust Species. The USFWS's website lists the program's four main objectives: Promote and implement habitat improvement projects that benefit Federal Trust Species, Provide conservation leadership and promote partnerships, Encourage public understanding and participation, Work with U.S. Department of Agriculture to implement conservation programs. The Partners program has locally based field biologists who work directly with private landowners and other partners to plan implement and monitor their projects in an environmentally friendly manner.

Relevant websites: http://www.fws.gov/partners/

Local Agencies and Organizations

Cal-Shasta Club

Cal-Shasta Club is a private recreation club consisting of 120 members, located on 340 acres, situated along the southern shoreline of Nacimiento Reservoir. Amenities consist of approximately 6 miles of private roads, launch ramp, helicopter pad (day and night), ice machines, clubhouse, a park and BBQ facility.

Relevant websites: http://lakenacimientosouthshorearea.com/Cal-Shasta.htm

Heritage Ranch Community Service District

Mission: The purpose and mission of Heritage Ranch CSD is to provide municipal services to the Village of Heritage Ranch in a manner that is efficient, safe and in accordance with applicable law. These services include the supply of drinking water, the disposal of wastewater, removal of solid waste, parks and recreation and retail gasoline.

The Heritage Ranch CSD is responsible for the operation and maintenance of the Heritage Ranch sewer and for allocating the 1100 acre feet per year allotment from the Nacimiento Reservoir for the Community of Heritage Ranch. The District's service area includes 5,361 acres; the Heritage Ranch CSD is bounded on the west by Nacimiento Reservoir, on the north by Nacimiento River, on the east by Camp Roberts, and on the south by certificated parcels. The Heritage Ranch CSD is located in Paso Robles, within the Community of Heritage Ranch.

Relevant websites: http://www.heritageranchcsd.com/

Home Owner's Associations

Heritage Ranch Owner's Association

The Heritage Ranch Owner's Association is responsible for managing 9,150 acres of land including 2,104 single-family residential lots and 5,100 acres of open space. Heritage Ranch is located along the southern shoreline of the Nacimiento Reservoir.

Relevant websites: http://hroa.us/main.htm

Oak Shores Community Association

The Oak Shores Community Association is responsible for the management of the Oak Shores Community and its facilities, which include a marina, clubhouse, boat slips and campground. The Association consists of five committees, Finance, Recreation, Architectural Review, Oak Leaves and Private Docks. The Finance Committee creates an annual operating budget for the community. The Oak Shores Community Association is managed by a Board of Directors, but also employs staff to carry out general management, business operations, code enforcement and maintenance.

Relevant websites: http://oakshores.us/

Santa Lucia Cabinowners Association

The Santa Lucia Cabinowners are a tract of recreational residences within the Los Padres National Forest and the upper San Antonio and Arroyo Seco River watersheds. They are sanctioned by the National Forest Homeowners Association.

Laguna Vista Boat Club

Laguna Vista Boat Club is located on the north shore of Nacimiento Reservoir at the end of Bee Rock Road. The club was established in 1964 and has 21 members on 10 acres. The members share a common area referred to as "The Point".

Lake Recreation and Public Safety Roundtable

The Lake Recreation and Public Safety Roundtable is an informal group of representatives from communities around Nacimiento Reservoir that meets with Monterey County Park Rangers to discuss issues of common concern to the Rangers and communities around the reservoir. The group works together to provide communication and support to goals and initiatives of Monterey County and the various private organizations.

Monterey County Farm Bureau

Monterey County Farm Bureau is a private, nonprofit association of farmers and ranchers throughout Monterey County. The Farm Bureau serves as a collective voice for farmers and ranchers and provides information, benefits and services. Farm Bureau cooperates with other agricultural organizations to fulfill its purpose of working for the solutions to the problems of the farm, the farm home and the rural community.

Relevant website: http://www.montereycountyfarmbureau.org/

Monterey County Water Resources Agency (MCWRA)

Mission: The Monterey County Water Resources Agency manages, protects and enhances the quantity and quality of water and provides specified flood control for present and future generations of Monterey County.

Specific information regarding reservoirs, precipitation, stream flow and groundwater are provided on the MCWRA website, or can be found at the office located in Salinas. The MCWRA carries out all County of Monterey Flood Control and Water Conservation District actions.

Relevant websites: http://www.mcwra.co.monterey.ca.us/

Nacimiento Regional Water Management Advisory Committee (NRWMAC)

NRWMAC represents visitors, property owners and enthusiasts of all sorts that enjoy Nacimiento Reservoir. NRWMAC acts as the collective voice of reservoir area property owners at the Monterey County Reservoir Operations Committee meetings held monthly in Salinas. This is where decisions are made which control the outflow of water from the reservoir. NRWMAC's goal is to maximize the water level in Nacimiento Reservoir from May 1st through October 1st.

Ranchos Del Lago

Ranchos Del Lago is an area of 21 privately owned parcels ranging in size from 7 to 268 acres. The parcels are located on the south side of Nacimiento Reservoir. Amenities include a community launch ramp.

Resource Conservation District of Monterey County (RCDMC)

Resource Conservation Districts are organized under the California Public Resources Code. The Monterey Resource Conservation Districts located within the Central Coast Region and is responsible for carrying out natural resource conservation programs within its boundaries, which cover 2,141,430 acres.

Mission: The mission of the RCDMC is to conserve and improve natural resources, integrating the demand for environmental quality with the needs of agricultural and urban users. The Monterey Resource Conservation District provides direct assistance to Monterey County farmers and landowners to protect soil, water, and natural habitats. The RCDMC mainly does public education work but also provides technical assistance to land users, schools, groups, organizations and the general public in conjunction with the Natural Resources Conservation Service. The RCDMC also partners with agricultural and natural resource protection organizations and agencies throughout the Central Coast.

Relevant websites: http://www.rcdmonterey.org/

Running Deer Ranch

Running Deer Ranch is an area on the south side of Nacimiento Reservoir in the area of Frankln and Las Tablas creeks. The Ranch consists of 138 property owners. Parcels range in size from 3 to 40 acres. The owners have a common area called "The Point" where they have a picnic area and boat launch ramp.

San Luis Obispo County Water Resources Advisory Committee

Mission: The San Luis Obispo County Water Resources Advisory Committee's purpose is to advise the County Board of Supervisors concerning all water resources policy decisions of the San Luis Obispo County Flood Control and Water Conservation District.

The Committee is also responsible for making recommendations for specific water resource programs and methods of financing these programs to the Board of Supervisors. The Committee includes members from the County at Large, every City in San Luis Obispo County, every local Community Service District, Resource Conservation Districts, Agriculture and the County Farm Bureau, Environmental representatives, and Water Agencies and Institutions. The committee meets once a month in San Luis Obispo.

Relevant websites: http://www.slocountywater.org/site/Water%20Resources/Advisory%20Committee/index.htm

San Luis Obispo County Farm Bureau

The San Luis Obispo County Farm Bureau is a non-governmental, non-profit, voluntary membership corporation that's purpose is to protect and promote agricultural interests throughout San Luis Obispo County and to find solutions to the problems of the farm, the farm home and the rural community. Farm Bureau strives to protect and improve the ability of farmers and ranchers engaged in production agriculture to provide a reliable supply of food and fiber through responsible stewardship of California's resources.

Relevant website:
http://www.slofarmbureau.org/About-Us/About-Us.htm

South Nacimiento Road Association (SNRA)

The South Nacimiento Road Association represents more than 500 property owners who maintain approximately 11 miles of private roads that come from Chimney Rock road along the shore of Nacimiento Reservoir. This area covers approximately 8000 acres.

Relevant websites: http://lakenacimientosouthshorearea.com/SNRA%20ROAD%20REPAIR%20PRIORITY%20LIST%202008%20REV2.13.08.pdf

South Shore Village Vacation Club

South Shore Village Vacation Club is located on the south shore of Nacimiento Reservoir at the west end of the reservoir in an area often referred to as "The Narrows". The club owns approximately 560 acres, and has 40 members. Amenities include consist of launch ramps, bathroom facilities, ice machines, and a daytime heliport.

Tri-Counties Boat Club

Tri-Counties Boat Club is located on the south side of Nacimiento Reservoir in the Las Tablas bay area. The Club owns 40 acres and has 86 members. Facilities include a BBQ area and boat launch ramp.

Upper Salinas Las Tablas Resource Conservation District

Resource Conservation Districts are organized under the California Public Resources Code. The Upper Salinas Las Tablas Resource Conservation District is responsible for carrying out natural resource conservation programs within its boundaries, which covers approximately 1.5 million acres of the Central Coast area of California, extending from southeastern Monterey County to northwestern, central, and eastern San Luis Obispo County. About 700,000 acres are grazing lands and 400,000 are cropland; livestock production and dry farmed grains and hay are the major income producers for large landowners. The district includes 1,365,000 acres in San Luis Obispo County (about three-quarters of the county area) and 138,000 acres within Monterey County. The largest landowners are the federal government (Forest Service, BLM and U.S. Army (Camp Roberts), Hearst Corporation (Hearst Ranch and the Jack Ranch: *not located within the NACITONE Watershed*), and the Monterey County Water Resources Agency (Nacimiento Reservoir and the lands surrounding the reservoir).

In addition, the US-LT RCD has some purview over grading permits in the watersheds inside San Luis Obispo County plus the areas of Camp Roberts and Parkfield in Monterey County. Under the Alternative Review Program, landowners that neglected to obtain a County grading permit are referred to the RCD. The landowner can apply for an ARP grading permit or be referred back to the San Luis Obispo County Code Enforcement and District Attorney's Office. The Erosion Control Assistants Program, available to all landowners in San Luis Obispo County voluntarily, also connects to Code Enforcement and /or the District Attorney similar to the ARP. These alternative options for grading and erosion control enforcement provide with a second chance to meet permitting requirements and ensure that Best Management Practices are implemented.

Guiding Document: Upper Salinas Watershed Action Plan, Annual Plan and Long Range Plan

Relevant websites: http://www.us-ltrcd.org/ and http://www.mcwra.co.monterey.ca.us/Agency_data/USLS%20RCD%20Watershed%20Action%20Plan/USLS%20RCD%20Watershed%20Action%20Plan.htm

D. Relationship to Other existing Plans

The NACITONE Watersheds Management Plan is a non-regulatory document. This section reviews regulatory and non-regulatory plans that focus on or include these watersheds. Recommendations of the NACITONE Plan attempt to complement these existing plans where there is relevance to issues identified for these watersheds.

Central Coast Region Basin Plan (1994)
California Regional Water Quality Control Board

The goal of the Central Coast Region Basin Plan is to show how the quality of the surface and ground waters in the Central Coast Region should be managed to provide the highest water quality reasonably possible. The plan lists the various water uses and describes the water quality level that must be maintained to allow those uses. The Regional Board implements the Basin Plan by issuing and enforcing waste discharge requirements to individuals, communities, or businesses whose waste discharges can affect water quality. The Basin Plan is implemented by encouraging water users to improve the quality of their water supplies. Public works or other projects that affect water quality are reviewed and their impacts identified. The Central Coast Regional Board has jurisdiction over a 300-mile long by 40-mile wide section of California's central coast. Its geographic area encompasses all of Santa Cruz, San Benito, Monterey, San Luis Obispo, and Santa Barbara Counties.

Central Coast Regional Water Quality Control Board Vision (2008)

The Central Coast Regional Water Quality Control Board is moving in a fundamentally new strategic direction, based upon a Vision of Healthy Functioning Watersheds. This new Vision represents a refocusing of their approach providing a new framework for how they conduct business and achieve measurable results. The Vision structures their work towards their highest water quality priorities and more strategically aligns them with the anticipated challenges and opportunities in water quality and positions the agency to respond more nimbly to unexpected ones. For more information visit:
http://www.waterboards.ca.gov/centralcoast/publications_forms/publications/vision/index.shtml

Nacimiento Area Plan, San Luis Obispo County (2003)

The Nacimiento Area Plan is a supplemental plan to the County's General Plan. The plan deals specifically with 97,665 acres that comprise the planning area which is adjacent to the Monterey County line to the North, the Adelaida planning area to the South, Camp Roberts to the East and the Santa Lucia Range to the West. Nacimiento Reservoir is the center of the planning area. This plan describes County land use policies for the Nacimiento Planning Area, including regulations which are also adopted as part of the Land Use Ordinance.

Water Supply Programs (WSP-14, 15, 16, 17)
The Plan identifies issues related to water supply, the first refers to reservoir water use and the need to identify properties illegally taking water directly from the reservoir and removing all equipment used for this purpose. The second addresses the possibility of using reclaimed water and returning it to the reservoir to allow "equivalent amounts of water to be taken from reservoir supplies" (p.3-10). The last issue deals specifically with Oak Shores and Heritage Ranch, "if total water use reaches 1,100 acre feet per year, a moratorium should be placed on further development within the affected project"(p.3-10).

Rural Area Programs
The following programs apply to portions of the Nacimiento Planning Area outside of village reserve lines, in the land use categories listed.

Areawide *(RAP-1)*
The Plan states that the county should continue to encourage owners of eligible lands to participate in the agricultural preserve program.

Open Space (RAP-2)
The Plan states that the County will work with Monterey County Flood Control and Water Conservation District to create plans "for a wilderness park with appropriate passive recreational uses" (p.6-13).

Village Programs
The following program applies to all land use categories within the Heritage and Oak Shores village reserve lines.

Phasing Plans (VP-1)
The Plan states that the County will work with developers and Monterey County to update current project phasing plans and will include them within the Land Use Element.

Combining Designations
The Plan refers to combining Designations as "special overlay land use categories applied in areas of the county with potentially hazardous conditions or special resources, where more detailed project review is needed to avoid or minimize adverse environmental impacts, or effects of hazardous conditions on proposed projects" (p.7-1).

The Santa Lucia Range and Foothill Areas
For the Village portion of the Planning Area the combined designation refers to those lands having moderately high and high landslide risk potential. The designation only refers to areas with high landslide risk that are located within the Rural portion of the Planning Area.

Nacimiento River and Canyon; Dip, Franklin, Las Tablas, Snake and Town Creeks; and Lake Nacimiento

This designation refers to water courses that are "identified as having potential flood hazards and development proposals must incorporate mitigation measures" (p.7-1). Specifically for Nacimiento Reservoir, "the 800 foot elevation constitutes the lake's high water level and no habitable structures are permitted below the 825 foot elevation" (p.7-1).

Tierra Redonda Mountain
This mountain is a major area landmark and is under Bureau of Land Management ownership. The mountain is considered to have high preservation priority by the State Department of Parks and Recreation and is of ecological importance. The mountain is considered to be public land and preservation of the entire mountain is the best strategy for conserving the ecosystem.

Lake Nacimiento Drive-Interlake Road
This road has been adopted as a State scenic highway route from Chimney Rock Road northwest to the Monterey County line; all visual impacts in this area should be minimized.

Rocky Butte Botanical Area
The Plan identifies this area as having botanical and scenic value. The Bureau of Land Management owns approximately 460 acres of this area, the remaining acres are privately owned and the County will encourage open space easements for these portions.

In addition, the following apply to specific Land Use Ordinances for the Nacimiento Area Plan:

Section 22.102.040

Site planning and development standards
Proposed development shall be designed and constructed in compliance with the following standards.

Snake and Dip Creeks**.** Retain Snake and Dip Creeks in their natural state, except for stock ponds and low intensity recreational uses such as trails and picnic areas.

Vegetation Protection**.** Site new development to avoid areas of dense brush and oak woodland vegetation.

Section 22.102.060

Protection of native vegetation**.** New parcels and development shall be sited where possible to avoid areas of dense brush and oak woodland vegetation, and locate building sites along ridges or hilltops where development would not be silhouetted against the sky, as seen from existing and proposed collector and arterial streets.

San Luis Obispo Integrated Regional Water Management Plan (2005)
San Luis Obispo County

The San Luis Obispo Integrated Regional Water Management Plan identifies five water management planning objectives which include water supply, water quality protection and improvement, ecosystem preservation and restoration, groundwater monitoring and management and flood management. The Nacitone watersheds fall in the Salinas and Nacimiento Water Planning Areas.

The Nacitone Watershed Management Plan will aid in meeting the objectives and regional solutions defined in the IRWMP (Section H3). Related objectives include to "protect and improve source water quality" and "protect and improve groundwater quality from point and nonpoint source pollution, including nitrate contamination; MTBE and other industrial, agricultural, and commercial sources of contamination; naturally occurring mineralization, boron, radionuclide, geothermal contamination; and seawater intrusion and salts." In addition, the IRWMP states that "projects recommended in sub-regional plans have already been coordinated at the sub-regional level and can be considered excellent candidates for implementation of the IRWMP" (Section M1.3). The Regional Priorities section provides a process for modifying priorities in response to change. It is anticipated that the Nacitone Plan, as a local watershed planning document, will be incorporated into the IRWMP using the adaptive management strategy (Section F4).

Nacitone Watershed Management Plan Issues	Salinas Valley Integrated Regional Water Management Plan Categories	San Luis Obispo Integrated Regional Water Management Plan Categories
1. Recreation 2. Gaps in Knowledge: Monitoring and Information Needs 3. Preventing Pollution from Point and Nonpoint Sources 4. The Role of Agriculture 5. Fire in the Watersheds 6. Taking Enforcement Action 7. Communication & Coordination 8. Watershed Health: Plants & Animals 9. Roads and Culverts 10. Education and Outreach 11. Invasive Species	1. Water Supply 2. Water Quality 3. Flood Protection 4. Environmental Enhancement	1. Water Quality 2. Water Supply 3. Ecosystem Preservation and Restoration 4. Groundwater Monitoring and Management 5. Flood Management

Figure 47. Comparison of issues addressed in the Nacitone WMP to the categories covered in the SV IRWMP and the SLO IRWMP

Salinas Valley Integrated Regional Water Management Plan (2006) Monterey County Water Resource Agency

The Salinas Valley IRWMP provides goals and objectives that address water supply, water quality, and other environmental issues at a regional scale. The planning area is defined by the Salinas Valley Groundwater Basin and describes a Long Term Regional Priority (Section 6.3.4) to implement integrated watershed management in the Nacimiento and San Antonio River watersheds in order to improve the water quality in the reservoirs as well as the riparian habitat and aquatic ecosystems of the Salinas River and the Salinas River Groundwater Basin. The Nacitone Plan will provide the essential local level of knowledge, planning and project prioritization to assist MCWRA in meeting this long term priority.

South County Area Plan, Monterey County (2007)

The South County Area Plan supersedes the General Plan for the South County Area. The plan consists of 1,281 square miles of the southernmost section of Monterey County. The area is bordered by the Central Salinas Valley Planning Area to the North, the San Benito, Fresno and Kings County lines to the East, the Coast Planning Area makes up the western border and the San Luis Obispo County line is the Southern boundary.

Land Use (SC-1.2, 1.3)
The Plan encourages clustered development in order to preserve agricultural land and open space and to make the most efficient use of land; and any policy or program (including large lot zoning and agricultural land trusts) that enhance the competitive capabilities of farms and ranches.

Safety (SC-4.1)
The Plan requires that any channelization or realignment work on the Salinas River may not be permitted unless an assessment by the Monterey County Water Resources Agency is done to ensure that the work will not increase flood hazards downstream.

Public Services (SC-5.2, 5.3, 5.5, 5.6)
The South County Area Plan will strive to protect and preserve natural and artificial groundwater recharge areas, water quality, natural resources, soils and watersheds. All New Development shall not occur on or in close proximity to the main channels and associated floodways of the Nacimiento, San Antonio, and Salinas Rivers. The Plan states that all commercial recreation facilities for camping and boating shall be compatible with surrounding uses, of moderate size, and consistent with all resource protection and hazard avoidance policies. The County also hopes to establish a park site along the Salinas River at Camp Roberts.

Stormwater Management Program - National Pollution Discharge Elimination System (NPDES)
San Luis Obispo County

The County Stormwater Management Program encompasses the designated unincorporated urbanized areas of San Luis Obispo County. The program complies with all of the US Environmental Protection Agency, National Pollutant Discharge Elimination System Phase II Final Rule and State Water Resources Control Board "Waste Discharge Requirements for Stormwater Discharges from Small Municipal Separate Storm Sewer Systems". This program was developed to reduce stormwater pollutants to receiving waters to the maximum extent practicable through the use of Best Management Practices.

Relevant website: http://www.slocounty.ca.gov/PW/Stormwater/SWMP.htm

Existing Management Objectives of Military Installations and the United States Forest Service

The United States Army at the Fort Hunter Liggett training base, the National Guard at Camp Roberts, and the US Forest Service, Monterey District at Los Padres National Forest are important watershed partners for the Nacitone Steering Committee and any future efforts that might arise from this Watersheds Management Plan. The public lands entrusted to those three entities represent approximately 48.1% of the combined San Antonio and Nacimiento Rivers watersheds.

In the Fort Hunter Liggett April 2007 amended Integrated Natural Resources Management Plan (INRMP, 2007) an ecosystem management philosophy is set forth.

> *In accordance with that philosophy, FHL is developing partnerships with various agencies to support management of its natural resources. Major partners in implementing this plan (INRMP 2007) are the USFWS and the CDFG. Other partners include other Department of Defense agencies, other Federal and State agencies, universities, contractors, and private citizens. An emphasis of the INRMP is to strengthen existing partnerships and to identify and develop new partnerships (INRMP, 2007, pg.5).*

The development and strengthening of partnerships with all the parties noted in the above paragraph was also a strong emphasis of the Nacitone Steering Committee across all issue areas identified in the *Watershed Strategy.* A representative from the Fort Hunter Liggett Environmental Division participated with the Steering Committee and Technical Advisory Committee. Camp Roberts staff met with the Nacitone Facilitator and was also an early partner

with the MCWRA in preparing the grant proposal for the watersheds management plan. US Forest Service, Monterey District staff contributed to several Steering Committee meetings, provided background information and helped review sections of the *Watershed Strategy.*

Nexus with the Nacitone Watershed Strategy:

Environmental documents from the two military installations and the US Forest Service contain goals that are similar to those in the *Watershed Strategy* as well as identify opportunities for additional data collection.

For example, the military Land Condition Trend Analysis (LCTA) process for both military installations could be useful in tracking long-term trends in the watershed. LCTA was initiated in the mid-1980s by the Department of Army for uniform data collection. LCTA collects physical and biological resources data to relate land conditions to training activities. These data are intended to provide information to effectively manage land use and natural resources.

Below are six, selected issues from the Fort Hunter Liggett INRMP, 2007 with goals that are very similar to those in the *Watershed Strategy* thereby presenting opportunities for collaboration to achieve common goals.

Selected Issues, Goals, and Actions from the Fort Hunter Liggett INRMP, 2007 (pages 159-184)

WATER QUALITY - Issue: *Although water quality is high in both major river drainages, the potential for point source and nonpoint source contamination from sedimentation and nutrients exists.* ***Goal:*** *Maintain high quality surface waters to support viable populations of aquatic and terrestrial life.*
Actions
1. Continue to implement the storm-water pollution prevention plan (Radian Corporation 1995).
2. Maintain vegetation in watersheds and at reservoirs to promote natural filtering of sediments.
3. Continue to monitor surface water quality. Collect total suspended solids data from the San
Antonio River at Nacimiento Road and at Sam Jones Road for determination of overall impacts of Cantonment area use stations on tributary streams to better pinpoint sources of suspected sediment loadings.
4. Continue groundwater monitoring that includes drinking water monitoring and monitoring for suspected pollution sources.
5. Continue reservoir and initiate river water chemistry data collection (dissolved oxygen, pH, temperature, and nitrates).

OAK WOODLANDS - Issue: *Recruitment of mature oak trees is poor throughout California and will eventually result in the loss of the mature component of the oak population.*
Goal: *Maintain and enhance mature oak woodland stands and enhance oak woodland seedling regeneration.*
Actions
1. Minimize oak loss resulting from mechanical removal and controlled burns.
2. Continue study to determine effects of different fire regimes on mature valley oak trees.
3. Continue FHL Training Regulation 350-2 restrictions that protect oak woodlands.

4. Use existing GIS data to develop large-scale management units by classifying areas by dominant vegetation (e.g., valley oak savanna, blue oak woodland). Within these, identify locations most frequently used for military training, annual burn sites, potential future grazing sites, and endangered species habitats.
5. Identify management and monitoring requirements in the management units, such as exotic species control, propagating and replanting oaks, and assessing effects of frequent fire.
6. Identify the status of stands in management units, such as recruitment occurrence, stand density, and health of trees in the stand.
7. Identify areas where oaks historically occurred that might support restored oak stands.
8. Identify areas where oak recruitment is most likely to be successful and focus efforts at those locations.
9. Continue to collect acorns from FHL; propagate acorns; and use these for replanting efforts on FHL.

NATIVE BUNCH GRASSLANDS
Issue: *Most native bunchgrasses have been replaced with less desirable exotic annual species of grasses.* ***Goal****: Maintain and promote widespread and diverse native bunchgrass grasslands.*
Actions
1. Continue reseeding projects by the LRAM (Land Rehabilitation and Maintenance) program using a mixture of native grass seeds.
2. Investigate the potential for livestock grazing and fire to be used in promoting and enhancing native bunchgrasslands.

RARE NATURAL COMMUNITIES - Issue: *CNDDB rare natural communities occurring on FHL include sycamore alluvial woodland, valley needlegrass grassland, and valley oak woodland. FHL should ensure that they remain viable and intact components of the FHL ecosystem.* ***Goal:*** *Protect rare natural communities through measures described for individual vegetation communities.*
Action - *Continue to implement protective measures described for individual vegetation communities.*

FIRE - Issue: *Wildland fire is a relatively common event that affects the landscape of FHL. The effects of wildland and prescribed fire on natural resources are not well documented or understood.* ***Goal:*** *Assess the impact of fire on species of interest, vegetation communities, and animal and plant populations of interest.*
Actions
1. Evaluate fire history and species information with GIS
Goal: *Use fire as a tool to achieve natural resource management and training goals and objectives.*
2. Use prescribed fire to manipulate vegetation to achieve natural resource and training goals and objectives.
3. Coordinate with Directorate of Fire Services of prescribed burns through environmental review.
4. Complete and implement the Wildland Fire Management Plan.

GRAZING - Issue: *Livestock grazing was terminated on FHL in 1991 due to excessive forage utilization and unacceptable resource damage associated with poor livestock management and drought.* ***Goal:*** *Evaluate the possibility of developing a grazing program that promotes biological diversity, provides minimum impact to the military mission, is*

tailored to the native flora and fauna of FHL, does not conflict with Endangered Species Act compliance, and protects and maintains cultural resources.
Actions
1. Develop a livestock grazing options that are consistent with the goal.
2. Complete an environmental assessment to determine whether the grazing program should be reinitiated.
3. Implement the grazing management plan option selected.
(INRMP, 2007 – Fort Hunter Liggett).

Camp Roberts has developed Land Rehabilitation and Maintenance (LRAM) goals and objectives and an Environmental Awareness program that could be assessed for possible collaborative opportunities with the Nacitone Watersheds Management Plan. Below are two of the goals listed for *Riparian Ecosystem Management and River, Pond and Reservoir Ecosystem Management in the Camp Roberts* INRMP, 2000.

GOAL: Protect and enhance riparian habitats to ensure healthy, functioning systems.

GOAL: Protect and maintain aquatic ecosystems in accordance with state and federal laws and regulations and adhering to the principles of ecosystem management for the purposes of a training resource and each river's designated beneficial uses.

The U.S. Forest Service, Monterey District staff are key partners for a future Nacitone community group to identify shared goals for these watersheds. There is a ***Land Management Plan***, prepared in September 2005, covering the entire Los Padres National Forest which reaches into Santa Barbara County. That document is not specific to the Nacitone watersheds portion of the Los Padres National Forest, but includes general strategies that may yield opportunities for collaboration in the Nacitone. For example, a Conservation Strategy Emphasis for the next 3-5 years on page 112 of the September 2005 Plan includes the following under *Education/ Information/Interpretation:*

- Importance of riparian and aquatic species habitat
- Value of vegetation management
- Importance of keeping vehicles on roads
- Importance of keeping foot traffic on wilderness trails
- Species linkages and corridors and biological diversity
- Importance of reducing exposure of wildlife to lead poisoning

There is also a Draft Environmental Impact Statement (EIS) Revised Land Management Plan. These documents should be reviewed for goals, objectives, or guiding principles that may align with Nacitone Watersheds Management Plan goals and objectives.

(This page intentionally left blank)

References

Abraham, Kera. 2007, September 13. Wasted Wilderness. *Monterey County Weekly.*

Adams, Mary. 2008. RWQCB Personal Communication.

Alexander, R.B., Boyer, E. W., Smith, R.A, Schwarz, G.E. and Moore, R.B. 2007. The Role of Headwater Streams in Downstream Water Quality. *Journal of American Water Resources Association, 43(1).*

Barry, Sheila, Stephanie Larson and Melvin George. 2006. California Native Grasslands: A Historical Perspective. *Grasslands.*

Bartolome, J.W., B.H. Allen-Diaz, and E. Gray. 2003. *Grazing management plan, Fort Hunter Liggett, California – Supplementary analysis*. The Nature Conservancy final report, FHL project # HY-20010-0J.

Brennan. J., Central Coast Water Authority and Rodriguez Consulting, Inc. 2005. Draft Urban Water Management Plan. Prepared for The Central Coast Water Authority.

California Army National Guard. 2001. Camp Roberts Training Center Monterey and San Luis Obispo Counties, California Final Draft Integrated Natural Resources Management Plan.

California Department of Water Resources. 2004. *California Groundwater, Bulletin 118*.

California Department of Fish and Game. 1999. California Natural Diversity Database.

California Department of Fish and Game. 2003. California Natural Diversity Database.

California Department of Fish and Game. 2007. California Natural Diversity Database.

Central Coast Regional Water Quality Control Board. 2003. *Las Tablas Creek and Lake Nacimiento Total Maximum Daily Load (TMDL).*

Conrad, Maya, Coastal Watershed Council. 2001. *Status of Citizen Monitoring, Salinas River Watershed.*

Coastal Resources Institute. 1994. *Clean Lakes Assistance Program for Lake Nacimiento.* Cal Poly, San Luis Obispo.

Conley, G.L., Hoover, B.H., DeBeukelaer, S. 2008. *Central Coast Water Quality Data Assessment*. Monterey, CA. NOAA Monterey Bay National Marine Sanctuary Report, pp. 174.

Dahrymple, RL. 2000. *Fringe Benefits of Rotational Grazing*. Forage and Grassland Council Annual Meeting.

Department of the Army Installation Management Command-West Region. 2007. *Draft Environmental Assessment and Finding of no Significant Impact Interim Army Reserve Mission Changes for the United States Army Combat Support Training Center at Fort Hunter Liggett, Monterey County, California*. Prepared for United States Army Combat Training Center Environmental Division.

D'Ornellas, John. 2005. *Heritage Ranch Sanitary Survey, Five Year Update*.

Ekelund, Ken. 2007. Personal communication. Monterey County Water Resource Agency, Salinas, CA.

Fisher, Anne B. 1945. *The Salinas – Upside Down River*.

Fort Hunter Liggett. 2004. *Integrated Natural Resource Management Plan (2004-2007*).

Fort Hunter Liggett. 2008. *Fort Hunter Liggett 2007 Annual Report for Implementation of the 2004-2008 Integrated Natural Resources Management Plan*. Fort Hunter Liggett Environmental Office, Directorate of Public Works, US Army Combat Support Training Center, Monterey County, California.

French, Letty. 2008. Personal Communication. Nacimiento Landowner, Paso Robles, CA.

Fugro West Inc. 2002. *Paso Robles Groundwater Basin Study*.

Fugro West Inc, Etic Engineering and Cleath and Associates. 2005. *Paso Robles Groundwater Basin Study Phase II.*

Geotechnical Consultants, Inc. 1984. *Hydrogeologic Update, Fort Hunter Liggett Military Reservation.*

Humfrey, Phil. 2008. Personal communication. Steering Committee Co-chair & Nacimiento Regional Water Management Advisory Committee Director, Paso Robles, CA.

Johnson, Rob. 2008. Personal communication. Hydrologist. Monterey County Water Resource Agency, Salinas, CA.

Jones & Stokes Associates, Inc. 1991. *Distribution of Wintering Bald Eagles at Nacimiento Reservoir Compared to Surrounding Areas*

Logan, John. 1987. *Hydrogeology of a Part of the Lockwood Area*.

Mangi Environmental Group, Inc. and Kristin M. Snyder of EcoLogik, Inc. 2001. *Camp Roberts Integrated Natural Resources Management Plan*

Marine Research Specialists. 2003. Nacimiento Water Project Environmental Impact Report. Prepared for San Luis Obispo County Department of Planning and Building.

Monterey County Contracts/Purchasing Division. 2007. *Request for Interest #11047 To Provide Concessionaire Service for Lake San Antonio and Lake Nacimiento.*

Monterey County Planning and Building Department, 2007. *South County Area Plan*.

Monterey County Planning and Building. 1995 and 2004. *Monterey County General Plans.*

Monterey County Water Resources Agency. 1998. *Salinas Valley Water Project, Draft Master Environmental Impact Report.*

Monterey County Water Resources Agency. 2002. *Salinas Valley Water Project Responses to the DEIR/EIR*.

Monterey County Water Resources Agency. 2000. *Nacimiento Dam Operations Policy.*

Monterey County Water Resources Agency. 2004. *Notice of Petition to Change the Place of Use and Add Points of Diversion.*

Monterey County Water Resources Agency. 2006. *Salinas Valley Integrated Regional Water Management Functionally Equivalent Plan Update*.

Montgomery Watson. 1997. *Salinas Valley Historical Benefits Analysis Draft Report.*

National Park Service, Park Planning and Environmental Compliance Pacific West Regional Office. 2006. *Final Fort Hunter Liggett Special Resource Study.*

National Marine Fisheries Service. 2007. *Salinas Valley Water Project Biological Opinion*.

Native Habitat Organization. 2008. Web-site www.nativehabitat.org.

Perry, Thomas L. 2001. *Survey of the San Antonio and Nacimiento Dams and Reservoirs*.

Proctor, Rachel. 2002. *Good Grazing?* E: The Environmental Magazine.

Raycraft, Susan and Beckett, Ann Keenan. 2006. *Images of America, San Antonio Valley*.

Rice, T., Chipping, D., Eatough, N., Nakamura, R. and Bigley, D. of the Coastal Resources Institute, California Polytechnic State University. 1994. *Clean Lakes Assistance Program for Lake Nacimiento.*

RMC Water and Environment. 2003. Salinas Valley Water Project Engineer's Report.

RMC Water and Environment. 2006. *Salinas Valley Integrated Regional Water Management Functionally Equivalent Plan Update.*

RWQCB. 1994. Water Quality Control Plan (Basin Plan) Central Coast Region. California Regional Water Quality Control Board.

RWQCB. 1996. Water Quality Assessment Report (Central Coastal Region).

Regional Water Quality Control Board. 2002. *Watershed Management Initiative.* Central Coast.

San Luis Obispo County. 2005. Stormwater Management Program - National Pollution Discharge Elimination System (NPDES).

San Luis Obispo County Department of Planning and Building. 2007. County of San Luis Obispo Growth Management Ordinance.

San Luis Obispo County Department of Planning and Building. 2006. Land Use and Circulation Element: Resource Management System Annual Resource Summary Report.

San Luis Obispo County Department of Planning and Building. 2003. Nacimiento Area Plan. San Luis Obispo County.

San Luis Obispo County Department of Planning and Building. 2003. San Luis Obispo County General Plan: Land Use and Circulation Elements. San Luis Obispo County

San Luis Obispo County Department of Planning and Building. 2007. Title 22, Land Use Ordinance, Nacimiento Planning Area.

San Luis Obispo County Flood Control and Water Conservation District. 2005. Urban Water Management Plan.

San Luis Obispo County Flood Control and Water Conservation District. 2002. *Nacimiento Water Supply Project: Report on Recreational Use at Lake Nacimiento.*

State Water Resources Control Board, Division of Water Quality. 1995. *California Rangeland Water Quality Management Plan*. Non point Source Program.

Stechman, John: La Cuesta Consulting, The Nature Conservancy and U.S. Army Fort Lewis and Fort Hunter Liggett. 1995. *Grazing Assessment and Management Recommendations.*

Swanson Hydrology and Geomorphology. 2008. *Nacitone Watershed Resources Inventory Final Technical Memorandum – Water Resources, Water Quality, and Sediment Supply.*

University of California Cooperative Extension. 2007. Agriculture and Natural Resources, Agricultural Experiment Station. *UC Cooperative Extension Helps Bring Cattle Grazing Back to Bay Area Grassland.*

Upper Salinas Las Tablas Resource Conservation District. 2008. *Grazing Management Plan.*

U.S. Army Environmental Command for the Department of the Army Headquarters. 2007. *Draft Programmatic Environmental Impact Statement for Army Growth and Force Structure Realignment.*

USDA U.S. Forest Service. 2004. *Draft Land Management; Parts 1, 2 & 3.*

USDA Watershed Science Institute. 2000. Principal Pathogens of Concern Cryptosporidium and Giardia (ftp://ftp-fc.sc.egov.usda.gov/WSI/pdffiles/Pathogen_Information_Sheet-Cryptosporidium_and_Giardia.pdf).

Ventana Wilderness Alliance and Friends of the River 2007. *Ventana Wild Rivers Proposal.*

Wallace Group. 2007. *Oak Shores Community Service Area 7A Wastewater Treatment Plant Expansion.*

Wallender, Lisa. 2008. Personal Communication. Water Systems Chemist. San Luis Obispo County Water Quality Lab, San Luis Obispo, CA.

Agency and Organization Websites

Nacitone Watershed
www.nacitonewater.org

Bureau of Reclamation
http://www.usbr.gov/main/about/
http://www.usbr.gov/mp/aboutus.html

California Department of Forestry and Fire Protection
http://www.fire.ca.gov/

California Department of Water Resources
http://www.water.ca.gov/

California Department of Water Resources Division of Safety of Dams
http://www.damsafety.water.ca.gov/

California Environmental Protection Agency
http://www.calepa.ca.gov/

CAL FIRE- County of San Luis Obispo
http://www.cdfslo.org/

Heritage Ranch Owner's Association
http://hroa.us/main.htm

Monterey County Water Resources Agency
http://www.mcwra.co.monterey.ca.us/

National Oceanic and Atmospheric Administration (NOAA) Restoration Center
http://www.nmfs.noaa.gov/habitat/restoration/

Oak Shores Community Association
http://oakshores.us/

Regional Water Quality Control Board (RWQCB)
http://www.swrcb.ca.gov/index.shtml

San Luis Obispo County Water Resources Advisory Committee
http://www.slocountywater.org/site/Water%20Resources/Advisory%20Committee/

San Luis Obispo County Public Works Department
http://www.slocounty.ca.gov/PW.htm

Nacimiento Water Project
http://www.slocounty.ca.gov/PW/NacWP.htm

Upper Salinas Las Tablas Resource Conservation District
http://www.us-ltrcd.org/long-range.html

United States Bureau of Land Management
http://www.blm.gov/wo/st/en/info/About_BLM.html

United States Fish and Wildlife Service
http://www.fws.gov/habitatconservation/wrda.htm

USFWS Partners Program
http://ecos.fws.gov/partners/viewContent.do?viewPage=home

Glossary

Alluvial - clay, silt, sand, gravel, or similar sediment material deposited by running water

Beneficial use – Historical, present, and potential uses of water in the Basin as defined by the RWQCB. The intent is to ensure the continuance of beneficial uses and establish compatible water quality standards as well as the level of treatment necessary to maintain the standards.

Confluence - the meeting place of two streams

Critical habitat – a specific area, identified by the NOAA Fisheries and/or USFWS, in which are found physical or biological features essential to the conservation of the species, and which may require special management considerations or protection. Multiple impacts are considered when designating critical habitat.

Electrofishing – a common fish population monitoring technique that uses electricity to stun fish before they are caught and counted. The survey determines abundance, density and species composition.

Epilimnion – the water layer overlying the thermocline of a lake

Evaporation – dissipation of water into vapor usually caused from heating by the sun groundwater basins

Habitat - the place or environment where a plant or animal naturally lives

Hydrophytic – a plant that grows in water or very moist ground; an aquatic plant

Hypoliminion – the water layer below the thermocline of a lake

Mean daily discharge – average stream flow per day

Mitigation – an action that results in a smaller impact or a compensates for an unavoidable impact

mg/L – milligrams per liter; a unit of measurement to express the concentration of a substance in a solution; same as "parts per million (ppm)" for aqueous solutions

Non-point source – pollution arising from many unidentifiable sources i.e. agriculture

Point source – pollution arising from a single identifiable source i.e. wastewater outfall

Redd – salmon nest

Riparian - area on the bank of a watercourse

Thermal refuge – stream area, usually a tributary or confluence, used by Steelhead for its cooler waters as refuge from warmer waters of the main channel.

Thermocline - the region in a thermally stratified body of water which separates warmer surface water from cold deep water and in which temperature decreases rapidly with depth

Turbidity – opaqueness/ clarity of water due to suspended sediment loads

Unincorporated – areas falling outside of city limits such as County lands and towns

Urban reserve lines – designated line beyond city limits where development will focus in the future

Watershed – the land area that contributes runoff to a particular water body

Wild and scenic - selected rivers that possess outstandingly remarkable scenic, recreational, geologic, fish and wildlife, historic, cultural or other similar values that are preserved in free flowing condition with their immediate environments for the benefit and enjoyment of present and future

Abbreviations

BMP	Best Management Practice
BRAC	Base Realignment and Closure
CCAMP	Central Coast Ambient Monitoring Program
CCRWQCB	Central Coast Regional Water Quality Control Board
CEQA	California Environmental Quality Act
Cfs	cubic feet per second
CNDDB	California Natural Diversity Database
CSD	Community Service District
DO	Dissolved Oxygen
EIR	Environmental Impact Report
EPA - (US)	Environmental Protection Agency
FHL	Fort Hunter Liggett
GIS	Geographic Information Systems
INRMP	Integrated Natural Resources Management Plan
IRWMP	Integrated Regional Water Management Plan
IWMP	Integrated Watershed Management Plan
LID	Low Impact Development
LRMP	Land and Resource Management Plan
MCFCWCD	Monterey County Flood Control and Water Conservation District
MCWRA	Monterey County Water Resources Agency
MOU	Memorandum of Understanding
MSL	Mean Sea Level
MTBE	Methyl Tertiary-Butyl Ether
NEPA	National Environmental Protection Act
NGVD 29	National Geodetic Vertical Datum of 1929
NMFS	National Marine Fisheries Service
NPDES	National Pollution Discharge Elimination System
NRCS	Natural Resource Conservation Service
NRWMAC	Nacimiento Regional Water Management Advisory Council
NWP	Nacimiento Water Project
RCD	Resource Conservation District
RWQCB	Regional Water Quality Control Board (Central Coast Region)
SAM	Central Coast Water Quality Data Synthesis Assessment and Management Project
SH&G	Swanson Hydrology & Geomorphology (a private company)
SVWP	Salinas Valley Water Project
TDS	Total Dissolved Solids
TMDL	Total Maximum Daily Load
VOC	Volatile Organic Compounds
WRI	Watershed Resources Inventory

(This page intentionally left blank)

Resources for Residents and Landowners

Water Quality

- Facts about Cyanobacteria & Cyanobacterial Harmful Algal Blooms

Center for Disease Control and Prevention
http://www.cdc.gov/hab/cyanobacteria/facts.htm

- Klau/ Buena Vista Mine Superfund Site

U.S. Environmental Protection Agency
http://yosemite.epa.gov/r9/sfund/r9sfdocw.nsf/95831d90484434d7882574260072fadf/dcb0a4770abe6b618825746e0060ae01/$FILE/Klau6_08%2091kb.pdf
http://www.epa.gov/superfund/sites/npl/nar1732.htm

- Mercury Impacts/ Fish Advisories

http://www.dnr.state.wi.us/org/caer/cea/mercury/impact.htm
http://www.ehib.org/topics/BifoldForWeb.pdf
http://www.ehib.org/topic.jsp?topic_key=173

- Alternative Review Process

Upper Salinas Las Tablas Resource Conservation District
http://www.us-ltrcd.org/review.html

- Handbook of Agricultural Conservation Practices

Monterey Resource Conservation District
http://www.rcdmonterey.org/pdf/AgHandbook.pdf

- Cover Up Story: Erosion Control Handbook

Upper Salinas Las Tablas Resource Conservation District & SLO County
Copies available from:
US/ LT Resource Conservation District
(805) 434-0396 ext. 4

Water Projects

- Salinas Valley Water Project

http://www.mcwra.co.monterey.ca.us/welcome_svwp_n.htm

- Nacimiento Water Project

http://www.slocounty.ca.gov/PW/NacWP

Rangeland Management & Grazing

- California Rangeland Resolution

http://www.rangelandtrust.org/RangelandResolution6-24-08.pdf

- California Rangeland

UC Davis Extension
http://californiarangeland.ucdavis.edu/

- Grazing Handbook

Sotoyome Resource Conservation District
http://sotoyomercd.org/GrazingHandbook.pdf

- Riparian Area Management: Grazing Management for Riparian-Wetland Areas, TR 1737-14 1997

Bureau of Land Management and the Forest Service
Copies available from:
BLM, National Business Center, BC-650B
PO Box 25047
Denver, Colorado 80225-0047

- Management reduces E. coli in irrigated pasture runoff

Knox, Tate, Dahlgren and Atwill, 2007
http://calag.ucop.edu/0704OND/pdfs/IrrigationEcoli.pdf

- Significant Escherichia coli attenuation by vegetative buffers on annual grasslands

Tate, Atwill, Bartolome, Nader, 2006
http://jeq.scijournals.org/cgi/reprint/35/3/795

Fire

- Homeowner's Checklist: How to Make your Home Fire Safe

California Department of Forestry and Fire Protection
http://www.fire.ca.gov/communications/downloads/fact_sheets/Checklist.pdf

- Residential Burning

http://www.slocleanair.org/programs/residential.asp

Roads

- Low Maintenance Roads for Ranch, Fire and Utilities Access

Wildland Solutions
http://nohvcclibrary.forestry.uga.edu/SCANNED%20FILES/T-0028.pdf

Agricultural Water Quality

- Agriculture Management Series includes cover crops, access roads, filter buffer strips, self-monitoring of farm or ranch, rock energy dissipaters, and grassed waterways (GW 101 through 106-2006)

San Luis Obispo Farm Bureau, Natural Resource Conservation Service

Contact:
The San Luis Obispo Farm Bureau
651 Tank Farm Rd.
San Luis Obispo, CA 93401

Recreation

- ABC's of California Boating Law

CA Department of Boating and Waterways, 2007
http://www.dbw.ca.gov/Pubs/Abc/

Species and Habitat

- How to Grow California Oaks

McCreary, UC Cooperative Extension
http://danr.ucop.edu/ihrmp/oak04.htm

- Wildlife Among the Oaks

Johnson, Integrated Hardwood Range Management Program
http://danr.ucop.edu/ihrmp/allpubs.html

Geosyntec consultants

1111 Broadway, 6th Floor
Oakland, California 94607
PH 510.836.3034
FAX 510.836.3036
www.geosyntec.com

Shawna Scott
Planning Program Manager
SWCA Environmental Consultants
1422 Monterey Street C200
San Luis Obispo, CA 93401

18 April 2012

Subject: Baseline Water Demand
Proposed Laetitia Agricultural Cluster Subdivision
San Luis Obispo County

Dear Shawna,

As requested this letter presents a summary evaluation of baseline water demand for the proposed Laetitia Agricultural Cluster Subdivision (Proposed Project) in San Luis Obispo County.

Background

As described in the Draft EIR (DEIR, SWCA Morro Group, 2008), the Proposed Project includes development of 102 one-acre residential lots and four buildable open space lots totaling approximately 1,787 acres, construction of approximately 25 acres of internal residential roads, removal of approximately 113 acres of existing vineyards, and replanting of approximately 140 acres of vineyard. Development proposed within the open space lots includes a homeowner's association facility, recreation center, and a community center ("ranch headquarters").

The estimated total water demand of the Proposed Project reported in the DEIR (SWCA Morro Group, 2008) was 143 acre-feet per year (AF/Y) based on analysis by Cleath and Associates[1] (C&A, 2005). However, with required water conservation measures such as limitations on area of turf and residential irrigation and removal of the equestrian center, C&A (November 2008) reported that the project water demand was reduced nearly 50 percent to 73.7 AF/Y, which is equivalent to 45.7 gallons per minute (gpm). With additional limitations on landscape irrigation, the estimated project demand was further reduced to a total of 46.3 AF/Y, which is equivalent to 29 gpm (CHG, 2010).

[1] Subsequent references to Cleath and Associates are abbreviated C&A. In 2009, the name Cleath and Associates was changed to Cleath Harris Geologists, which is abbreviated as CHG.

Groundwater pumped from four wells completed in fractured bedrock (Wells 10, 11, 14, and 15) in the eastern portion of the property (Figure 1) is proposed as the sole water supply for the 102 residential lots and community facilities. Three phases of cyclic pumping from the four wells were conducted from the period from October 2009 through December 2010 by CHG. Results of the well testing and updated assessments of sustainable yield from the wells were prepared by CHG after the second and third phases of testing (CHG, July 2010 and March 2011). This evaluation of baseline water demand is provided as a supplement to our Review of Well Testing and Sustainable Yield Assessment (Geosyntec, October 2011).

Available Data on Baseline Water Demand for Laetitia Vineyards

The existing and additional vineyards, and existing winery and ranch facilities will continue the historical use of groundwater from existing wells on the western portion of the property (Figure 1). Historical water use for these facilities as reported by C&A (2004, 2005) and the DEIR, based on evaluation of available records for 1994 and 2003, is 168 acre feet per year (AF/Y), of which 161 AF/Y is used for irrigation of 620 acres of vineyards and 4.9 acres of irrigated lemon orchards, and 7 AF/Y is used for the winery and the winery, service building and residence. Not accounting for the small orchard, 161 AF/Y for 620 acres of vineyards equates to 0.26 AF/Y per acre of vineyards. C&A (2005) reported that the vineyards and orchards were irrigated by Wells 1, 3, 4, 5, and 9, and the winery, residences and facilities used Wells 2 and 7.

Laetitia reported[2] that 208 AF of water were pumped from Wells 1, 4, and 9 during 2011 for vineyard irrigation (33, 94, and 81 AF from Well 1, 4 and 9, respectively), and 5.3 AF of water were used for the winery production operations. In addition, metering of the primary domestic well from 18 April 2011 to 3 January 2012 indicated total pumping of 10.9 AF, however 4.3 AF of this was used for winery production. The remaining 6.6 AF for the period of 270 days equates to 8.9 AF/Y for the two residences, offices, tasting room, landscaping and shop. Metering of the backup domestic well indicated a total 0.027 AF for a period of 190 days from 27 June 2011 to 3 January 2012, which equates to an annual rate of 0.05 AF. Water use by the main estate residence, however, is not metered.

Assuming 619.8 acres of vineyards, the 2011 irrigation rate equates to approximately 0.34 AF/Y per acre of vineyards, substantially higher than the estimates for 1994 and 2003 discussed above.

---

[2] Email correspondence from S. Harris (CHG) to S. Scott (SWCA) 24 & 25 January 2012, and additional Email correspondence from S. Harris (CHG) to G. Thrupp (Geosyntec) and S. Scott (SWCA) 18 April 2012.

Calculations of Vineyard Water Demand from the County MWP

The most recent Draft Master Water Plan for San Luis Obispo County (Carollo, January 2012)[3] presents a compilation of calculated crop-specific agricultural annual water demand for each geographical water planning area (WPA) and a range of crop types (ESA Draft Memorandum dated 7 January 2010 included in Appendix D of the January 2012 Draft MWP). A map of the County WPAs and the ESA Draft Memo from the Draft MWP are provided as attachments to this letter.

The crop-specific values of agricultural water demand presented in the ESA Draft Memo are calculated using the method summarized below:

$$\text{The Annual Crop-Specific Water Demand} = \frac{ETc - ER}{(1 - LR)(IE)} - FP$$

ETc = Crop Evapotranspiration

ER = Effective Rainfall

LR = Leaching Requirements: amount of excess irrigation needed to remove salts from the soil. ESA used a value of 11% for WPA 7.

IE = Irrigation Efficiency: 70 to 85% for existing vineyards, which typically have drip irrigation systems, and 75 to 90% for furture vineyards.

FP = Frost Protection: Water is commonly applied to vineyards with sprinklers for frost protection (FP) on an as needed basis from January to March to help reduce damage to crops by freezing. Reported typical water useage for FP in San Luis Obispo County is 0.5 AF/Y per acres of vineyards. However, ESA used a FP value of 0.25 AF/Y per acre of vineyards for the entire County based on the assumption that only 50% of the vineyards use water for frost protection.

Further explanation and tables of values for each of these parameters are provided in the ESA Draft memo in Appendix D of the Draft MWP for the County.

---

[3] http://www.slocountywater.org/site/Frequent%20Downloads/Master%20Water%20Plan/index.htm

For WPA 7 (South Coast), which includes the Proposed Project, Table A1 of the ESA Draft Memo indicates that water demand of existing vineyards ranges from 0.7 to 1.3 with a middle value of 1.0 AF/Y per acre of vineyards. Table A2 indicates water demand of future vineyards is nearly the same: 0.7 to 1.2 with a middle value of 0.9 AF/Y per acre of vineyards.

Based on the method presented in Appendix D of the County's Draft MWP, the expected vineyard water demand at Laetitia are substantially greater than the reported values of 0.26 and 0.34 AF/Y per acre at the Laetitia vineyards discussed above. However, C&A (2004) reported that all the Laetitia vineyards have drip irrigation and that the vineyard manager indicated that there had not been any need for a frost protection spray system. The vineyard water demand numbers in the ESA memo include 0.25 AF/Y per acre for frost protection. If water is not used for frost protection at the Laetitia vineyards, then subtracting 0.25 AF/Y per acre from the low end of vineyard water demand numbers (Tables A1 and A2), results in adjusted water demand values of 0.45 AF/Y per acre of vineyards for existing or future vineyards in WPA 7, which is still substantially more than reported values at Laetitia of 0.26 and 0.34 AF/Y per acre of vineyards.

Note, however, that adjusted *middle* water demand values for existing vineyards in WPA 2 (Cambria) and WPA 3 (Cuyucos) are 0.15 and 0.25 AF/Y per acre after subtraction of 0.25 AF/Y per acre that is assigned for frost protection (Table A1). Furthermore, subtracting the assigned 0.25 AF/Y per acre of water for frost protection from *low* demand values in Table A1, which are all 0.5 AF/Y per acre for existing vineyards in WPA 1 (San Simeon), WPA 4 (Morro Bay), WPA 5 (Los Osos), and WPA 6 (San Luis Obispo/Avila), result in adjusted water demand values of 0.25 AF/Y per acre of vineyards. Thus, although the reported vineyard water demand values of 0.26 to 0.34 AF/Y per acre for the Laetitia vineyards are substantially lower than predicted for WPA 7 based on calculated water demands (ESA, 2010) presented in Appendix D of the County MWP (Corollo, 2012), the Laetitia vineyard reported values are similar to predicted values for other WPAs in the County if indeed no water is used for frost protection.

Calculation of Laetitia Agricultural Demand

Because available records of irrigation rates for the Laetitia vineyards are apparently limited to three years (1994, 2003, and 2011) and rainfall in 1994 and 2011 was well above the estimated average[4] for the Project Area (Geosyntec, 2010), we have used a reasonable conservative approach to calculate baseline water demand of the Laetitia vineyards based on the low water demand value of 0.7 AF/Y per acre for WPA 7 in Table A1 and subtraction of the assumed 0.25 AF/Y per acre for frost protection, which is included in the 0.7 value: 0.7 – 0.25 = 0.45 AF/Y per acre.

Conservative Calculated Baseline Water Demand of Laetitia Vineyards

= (620 acres) (0.45 AF/Y per acre) = 279 AF/Y

Conservative Calculated Water Demand of Proposed Project Vineyards
(removal of 113 acres of vineyard, but replanting of 140 acres: net gain of 27 acres)

= (647 acres) (0.45 AF/Y per acre) = 291.2 AF/Y

Based on the middle demand value for citrus in Table A1 (1.8 AF/Y per acre), the calculated additional water demand for the 4.9 acres of lemon tree orchards is

(4.9 acres) (1.8 AF/Y per acre) = 8.8 AF/Y

As a comparison, based on the reported 2011 irrigation rate of 0.34 AF/Y per acre:

Baseline Water Demand of Laetitia Vineyards

= (620 acres) (0.34 AF/Y per acre) = 208 AF/Y, and

Water Demand of Proposed Project Vineyards

= (647 acres) (0.34 AF/Y per acre) = 220 AF/Y

Confirmation that no water is used for frost protection and continued metering of the Laetitia vineyard irrigation rates is recommended to provide a more robust basis for site-specific vineyard water demand.

---

[4] Based on rainfall records for the Mehlschau Station, rainfall was 31.97 inches in 1994, 13.35 inches in 2003. And based on online data for the Nipomo station, rainfall in 2011 was 47.84 inches in 2011. Estimated average annual rainfall for the project area is approximately 17 inches (e.g. Geosyntec, 2011).

Viable Long-Term Groundwater Production Rate

Estimated sustainable yield totaling 87 AF/Y (54 gpm) from the four project wells (CHG, 2010), was scaled down to 65 AF/Y (40 gpm)[5] based on compensation for continued drop of water levels at three of the four wells (Wells 10, 14, and 15) during the Phase three testing (Geosyntec, 2011). Further revision to 62.4 AF/Y (38.7 gpm) with a 25% increase of pumping at Well 15 and reduction of pumping from Well 11 was recommended to protect Los Berros Creek baseflow (Table 4, Geosyntec, 2011).

We consider 62.4 AF/Y (38.7 gpm) a viable long-term production rate based on the water levels recorded in the four wells for the period from October 2009 to March 2011, which included several months of pumping. We reiterate a note of caution that rainfall during the testing program was 138 percent of average, and also that long-term yields of water wells producing from bedrock aquifers, which may have linear fracture systems, commonly are substantially less than short-term yields. However, we also reiterate that long-term groundwater production rates of 21 AF/Y reported by CHG (July 2010) for each of two irrigation wells[6] at the Project Site provide an additional line of evidence, that 62 AF/Y is a viable long-term groundwater production rate for the four project wells combined.

Project Demand Relative to Baseline Demand

This summary evaluation of baseline water demand facilitates consideration of the proposed project demand in context of the baseline demand on groundwater resources. The proposed project water demand of 46.3 AF/Y for the residential development and net gain of 27 acres of vineyards represents a 20% increase in water demand relative to the baseline demand based on the vineyard water demand adopted by the County's MWP (ESA 2010 in Carollo, 2012), or a 26% increase based on a lower vineyard water demand from reported 2011 irrigation for the Laetitia vineyards. The calculations are provided below.

---

[5] Page 15 of the Geosyntec 2011 report has a typo: 65 AF/Y equates to 40 gpm, not 42 gpm. The correct equivalent AF/Y and gpm values are provided in Table 4.

[6] CHG, July 2010, page 9 reports that Well 5 produced 540 AF over 26 years, and Well 9 produced 230 AF over 11 years. Each equates to approximately 21 AF/Y. Both of the wells are screened in the Obispo Formation fractured bedrock and their locations are shown on Figures 3 and 7.

Version 1. County MWP vineyard water demand value of 0.45 AF/Y per acre

Baseline Water Demand
= (620 acres vineyards)(0.45 AF/Y per acre) + (4.9 acres citrus)(1.8 AF/Y per acre)
+ (14.3 AF/Y winery, residential etc)
= 302.1 AF/Y

Baseline + Project Water Demand
= (647 acres vineyards)(0.45 AF/Y per acre) + (4.9 acres citrus)(1.8 AF/Y per acre)
+ (14.3 AF/Y winery, residential, etc) + 46.3 AF/Y
= 364.8 AF/Y

Increase from Baseline = (100)(364.8/302.1) = 119.3%

Version 2. Laetitia data vineyard demand value of 0.34 AF/Y per acre (2011 data)

Baseline Water Demand
= (620 acres vineyards)(0.34 AF/Y per acre) [Assumed to include citrus orchard]
+ (14.3 AF/Y winery, residential, etc)
= 222.3 AF/Y

Baseline + Project Water Demand
= (647 acres vineyard)(0.34AF/Y per acre) + (14.3AF/Y winery, residential etc) + 46.3 AF/Y
= 280.6 AF/Y

Increase from Baseline = (100)(280.6/222.3) = 126.2%

A 20 to 26% increase in groundwater production rates from the Laetitia property is viable particularly since, with the exception of Well 9 and some contribution from springs, the historical water supply for the vineyards and existing facilities has been from wells in the lower western portion of the Laetitia property—more than a mile away from the new wells in the upper portion of the property that would be used for the proposed residential development. Relatively close proximity of Well 9, which is used for vineyard irrigation, to Development Project Wells 10 and 11 (less than 0.5 mile separation), and the fact that all three of these wells tap groundwater within fractures in the Obispo Tuff, is cause for concern that the long-term production rate from Well 9 may decrease with operation of Wells 10 and 11. However, a potential decrease in production from Well 9 can be made up by minor increases in pumping from other wells in the western portion of the property.

In the long term, a 20 to 26% increase in total groundwater production at the Laetitia Property may decrease baseflow of Los Berros Creek. However, as previously recommended, curtailment of pumping from Well 11 during the months of August through November (Table 4 and Figure 19, Geosyntec 2011) will help to mitigate potential impacts to Los Berros Creek of groundwater pumping for the proposed residential development.

Sincerely,

Gordon Thrupp, PhD, PG, CHg
Associate Hydrogeologist

Nicole Gotberg, PG
Senior Staff Geologist

Attachments:

Figure 1. Site map with well locations
References
Map of San Luis Obispo Water Planning Areas
Draft ESA Memo on Crop-Specific Water Demand from Appendix D of the Draft MWP

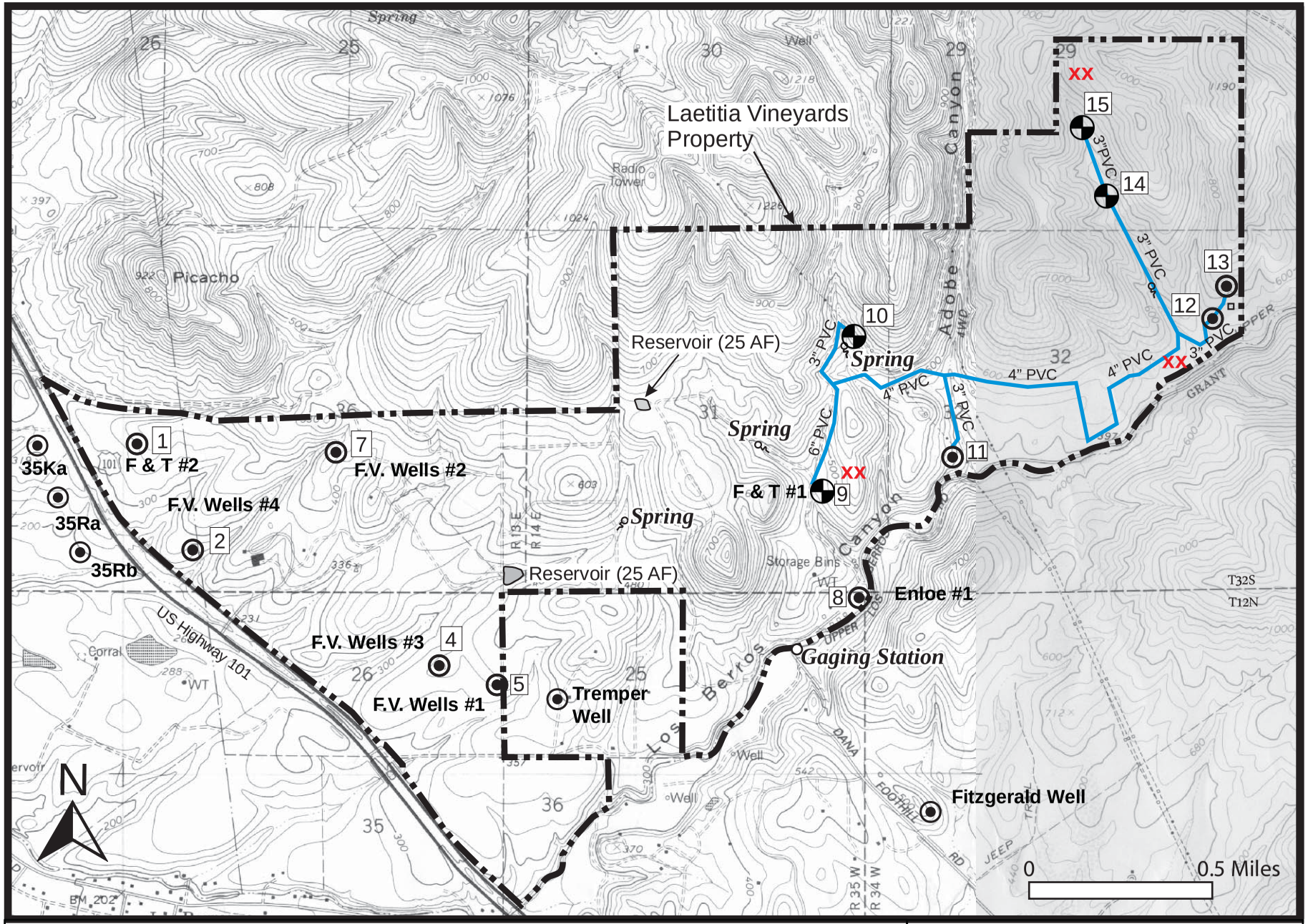

Base map: U.S.G.S. 7.5 minute topographic, Oceano and Nipomo Quadrangles, CA
Base map scale: 1 inch = 2000 feet
Well locations approximate
Adapted from CHG memo, 4 Jan 2011

Explanation

15 Well Location and number

Well discharge piping

XX Weather recording station

Water Supply Well for Proposed Subdivision

Topographic Map of the Laetitia Site Showing Well Locations
Baseline Water Demand
Proposed Laetitia Agricultural Cluster Subdivision
San Luis Obispo, California

April 2012	Figure 1	Geosyntec consultants

P:\GIS\Latetia\AI\2012Apr\TopoWells.ai

References

Carollo, 2012, San Luis Obispo County Master Water Plan, Draft January 2012.

Cleath Associates (C&A), 2004. Water Supply Assessment for Laetitia Vineyard and Winery, Arroyo Grande, California, January 27.

Cleath Associates (C&A), 2005, Water Resources Studies for Laetitia Vineyard Property, Arroyo Grande, San Luis Obispo County, October 6.

Cleath Associates (C&A), 2008, Response to County Comments on Water Resources, Laetitia Agricultural Cluster EIR, Arroyo Grande, San Luis Obispo County, March 28.

Cleath Harris Geologists (CHG), 2010, Laetitia Well Testing and Sustainable Yield Assessment, Los Berros Canyon, San Luis Obispo County, prepared for Laetitia Vineyard and Winery, July 2010.

Cleath Harris Geologists (CHG), 2011, Phase 3 Addendum, Laetitia Agricultural Cluster Project Well Testing and Sustainable Yield Assessment, Los Berros Canyon, San Luis Obispo County, prepared for Laetitia Vineyard and Winery, March 2011.

ESA, 2010, DRAFT Memorandum, San Luis Obispo County Annual Crop-Specfic Applied Water Variables, prepared for San Luis Obispo County Water Resources Advisory Committee (WRAC), 7 January 2010; included in Appendix D of the Corollo Draft January 2012 Master Water Plan.

Geosyntec, 2011, Review of Well Testing and Sustainable Yield Assessment, Proposed Laetitia Agricultural Cluster Subdivision, San Luis Obispo, California; prepared for SWCA Environmental Consultants, October 2011.

SWCA Morro Group, 2008. Draft Environmental Impact Report (DEIR) for the Laetitia Agricultural Cluster Subdivision, Tentative Tract Map and Conditional Use Permit, prepared for County of San Luis Obispo, September.

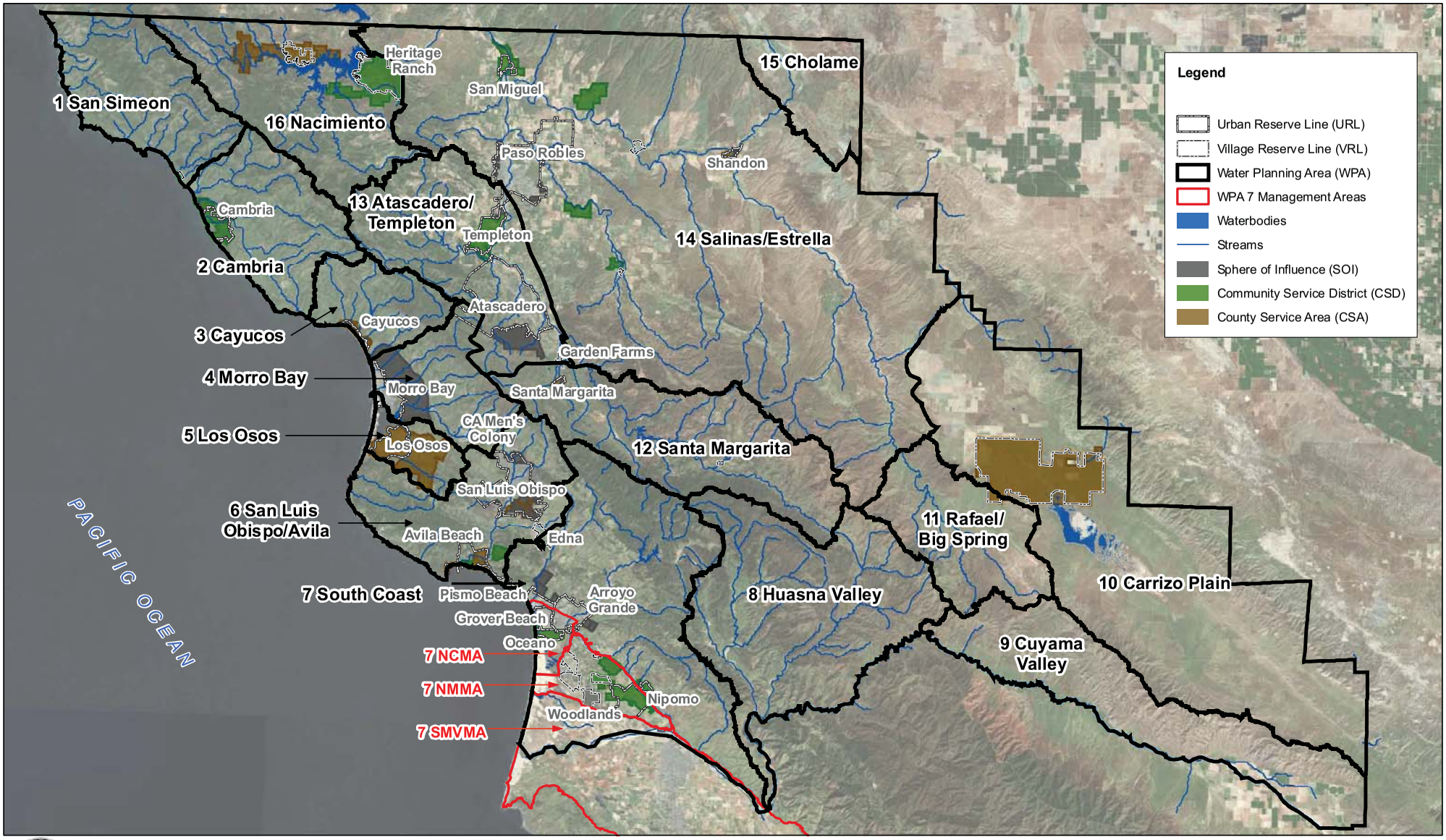

San Luis Obispo County Flood Control and Water Conservation District

MASTER WATER PLAN

Figure 1 Water Planning Areas in San Luis Obispo County

San Luis Obispo County

ESA

225 Bush Street
Suite 1700
San Francisco, CA 94104
415.896.5900 phone
415.896.0332 fax

www.esassoc.com

DRAFT memorandum

date January 7, 2010

to Courtney Howard, San Luis Obispo County; Water Resources Advisory Committee (WRAC)

from Annika Fain, ESA; Eric Zigas, ESA

subject San Luis Obispo County Annual Crop-Specific Applied Water Variables (Appendix A)

Agricultural Demand

ESA calculated the crop-specific applied water for these crop groups by utilizing information on crop evapotranspiration, effective rainfall, leaching requirements, irrigation efficiency, and frost protection. The following equation was used to calculate the annual crop-specific applied water (AF/Ac/Yr) for each of the water planning areas:

$$\text{Annual Crop - Specific Applied Water (AF/Ac/Yr)} = \frac{\text{ETc} - \text{ER}}{(1 - \text{LR}) \text{ x IE}} + \text{FP}$$

This formula was modified from a general formula for irrigation water requirements, which was established in 1997 (Burt, 1997). A detailed discussion and summary tables of each of the parameters in the above equation is presented below. **Table A1** presents a range of values for the existing annual crop-specific applied water (AF/Ac/Yr) for all crop groups and water planning area. **Table A2** presents a range of values for the projected future crop-specific applied water (AF/Ac/Yr) for all crop groups and water planning area. The annual crop-specific applied water is multiplied by crop acreage to determine an agricultural water demand (AFY). **Table A3** presents a range of values for the agricultural water demand for all crop groups and water planning area. **Table A4** presents a range of values for the agricultural water demand for all crop groups and water planning area.

Reference Crop Evapotranspiration (Eto). Crop evapotranspiration for CIMIS weather stations in San Luis Obispo County and in Kern County (to the east) was used. The CIMIS stations in San Luis Obispo County include two in San Luis Obispo, one in Atascadero, and one in Nipomo. Additionally, Blackwells Corner, in Kern County was used to estimate Eto in Eastern San Luis Obispo County. The water planning areas were grouped according to the reference crop evapotranspiration climate groups (**Table A5**). Due to substantial variability within WPA 7, ESA used an average crop evapotranspiration of Arroyo Grande and Nipomo for this area. A summary of the estimated reference crop evapotranspiration used for the analysis is shown in **Table A6**.

Crop coefficients (Kc). The crops in San Luis Obispo County were assigned crop coefficients based on the crop type and location. These crops include alfalfa, nursery, irrigated pasture, citrus, deciduous, vegetable, and

vineyard. The spreadsheet and ArcGIS® model is set-up so these numbers can be easily updated with new crop coefficients and crop evapotranspiration. The crop coefficients for this analysis are summarized in **Table A7**.

TABLE A1
EXISTING CROP-SPECIFIC APPLIED WATER (AF/AC/YR) BY CROP GROP AND WATER PLANNING AREA

WPA #	WPA Name	Alfalfa (AF/Ac/Yr)			Citrus (AF/Ac/Yr)			Deciduous (AF/Ac/Yr)			Nursery (AF/Ac/Yr)			Pasture (AF/Ac/Yr)			Vegetable (AF/Ac/Yr)[a]			Vineyard (AF/Ac/Yr)		
		Low	High	Med	Low	High	Med	Low	High	Med	Low	High	Med	Low	High	Med	Low	High	Med	Low	High	Med
1	San Simeon	1.4	2.5	2.0	0.5	1.2	0.9	1.3	2.2	1.8	0.6	1.5	1.1	1.6	2.7	2.1	1.2	1.4	1.3	0.5	1.0	0.8
2	Cambria	1.4	2.5	2.0	0.5	1.2	0.9	0.9	1.8	1.4	0.6	1.5	1.1	1.6	2.7	2.1	1.0	1.4	1.2	0.0	0.6	0.4
3	Cayucos	1.6	2.7	2.2	0.6	1.4	1.0	1.1	1.9	1.5	0.7	1.6	1.2	1.7	2.9	2.3	1.0	1.4	1.2	0.1	0.7	0.5
4	Morro Bay	2.2	3.3	2.7	1.1	1.8	1.5	1.6	2.4	2.0	1.2	2.0	1.6	2.3	3.4	2.9	1.2	1.7	1.4	0.5	1.0	0.8
5	Los Osos	2.2	3.3	2.7	1.1	1.8	1.5	1.6	2.4	2.0	1.2	2.0	1.6	2.3	3.4	2.9	1.2	1.7	1.4	0.5	1.0	0.8
6	San Luis Obispo/Avila	2.3	3.5	2.9	1.1	1.9	1.5	1.7	2.6	2.1	1.2	2.1	1.7	2.5	3.7	3.1	1.4	1.8	1.6	0.5	1.1	0.8
7	South Coast	2.7	3.9	3.3	1.5	2.2	1.8	2.7	3.7	3.2	1.6	2.4	2.0	2.9	4.1	3.5	1.5	1.9	1.7	0.7	1.3	1.0
8	Huasna Valley	4.8	6.4	5.6	2.5	3.4	3.0	4.2	5.4	4.8	2.6	3.7	3.1	4.8	6.5	5.7	2.0	2.6	2.3	1.8	2.6	2.2
9	Cuyama Valley	4.8	6.4	5.6	2.5	3.4	3.0	3.8	5.0	4.4	2.6	3.7	3.1	4.8	6.5	5.7	2.0	2.6	2.3	1.8	2.6	2.2
10	Carrizo Plain	5.1	6.7	5.9	2.8	3.6	3.2	4.1	5.3	4.7	2.9	3.9	3.4	5.2	6.8	6.0	2.1	2.7	2.4	2.0	2.7	2.4
11	Rafael/Big Spring	4.8	6.4	5.6	2.5	3.4	3.0	3.8	5.0	4.4	2.6	3.7	3.1	4.8	6.5	5.7	2.0	2.6	2.3	1.8	2.6	2.2
12	Santa Margarita	3.2	4.5	3.9	1.4	2.2	1.8	2.5	3.5	3.0	1.5	2.4	2.0	4.8	6.5	5.7	1.4	1.9	1.6	1.1	1.8	1.4
13	Atascadero/Templeton	3.2	4.5	3.9	1.4	2.2	1.8	2.5	3.5	3.0	1.5	2.4	2.0	4.8	6.5	5.7	1.4	1.9	1.6	1.1	1.8	1.4
14	Salinas/Estrella	3.8	5.2	4.5	1.9	2.7	2.3	3.4	4.5	4.0	2.0	2.9	2.5	5.2	6.8	6.0	1.6	2.2	1.9	1.4	2.1	1.7
15	Cholame Valley	4.9	6.5	5.7	2.5	3.3	2.9	3.9	5.1	4.5	2.6	3.6	3.1	4.8	6.5	5.7	1.9	2.4	2.1	2.0	2.7	2.3
16	Nacimiento	3.2	4.5	3.9	1.4	2.2	1.8	2.5	3.5	3.0	1.5	2.4	2.0	3.3	4.6	3.9	1.4	1.9	1.6	1.1	1.8	1.4

[a] Accounts for multi-cropping (assumes 3 vegetable crops planted per acre per year for WPA 1-7; assumes 2 vegetable crops planted per acre per year for WPA 8-16)

TABLE A2
PROJECT FUTURE CROP-SPECIFIC APPLIED WATER (AF/AC/YR) BY CROP GROP AND WATER PLANNING AREA

WPA #	WPA Name	Alfalfa (AF/Ac/Yr)			Citrus (AF/Ac/Yr)			Deciduous (AF/Ac/Yr)			Nursery (AF/Ac/Yr)			Pasture (AF/Ac/Yr)			Vegetable (AF/Ac/Yr)[a]			Vineyard (AF/Ac/Yr)		
		Low	High	Med	Low	High	Med	Low	Low	High	Med	Low	High	Med	Low	Low	High	Med	Low	High	Med	Low
1	San Simeon	1.3	2.4	1.8	0.5	1.2	0.8	1.3	2.1	1.7	0.6	1.4	1.0	1.5	2.5	2.0	0.9	1.3	1.1	0.0	0.6	0.3
2	Cambria	1.3	2.4	1.8	0.5	1.2	0.8	0.9	1.7	1.3	0.6	1.4	1.0	1.5	2.5	2.0	0.9	1.3	1.1	0.0	0.6	0.3
3	Cayucos	1.5	2.5	2.0	0.6	1.3	0.9	1.0	1.8	1.4	0.7	1.5	1.1	1.6	2.6	2.1	1.0	1.3	1.2	0.2	0.7	0.4
4	Morro Bay	2.1	3.0	2.5	1.1	1.7	1.4	1.5	2.2	1.9	1.1	1.9	1.5	2.2	3.2	2.7	1.2	1.5	1.4	0.5	1.0	0.7
5	Los Osos	2.1	3.0	2.5	1.1	1.7	1.4	1.5	2.2	1.9	1.1	1.9	1.5	2.2	3.2	2.7	1.2	1.5	1.4	0.5	1.0	0.7
6	San Luis Obispo/Avila	2.2	3.2	2.7	1.0	1.7	1.4	1.6	2.4	2.0	1.1	2.0	1.5	2.3	3.4	2.9	1.3	1.7	1.5	0.5	1.0	0.7
7	South Coast	2.6	3.6	3.1	1.4	2.1	1.7	2.6	3.5	3.1	1.5	2.3	1.9	2.7	3.8	3.3	1.4	1.8	1.6	0.7	1.2	0.9
8	Huasna Valley	4.6	6.1	5.3	2.4	3.3	2.8	4.1	5.2	4.6	2.5	3.5	3.0	4.6	6.1	5.4	1.9	2.5	2.2	1.7	2.5	2.1
9	Cuyama Valley	4.6	6.1	5.3	2.4	3.3	2.8	3.7	4.8	4.2	2.5	3.5	3.0	4.6	6.1	5.4	1.9	2.5	2.2	1.7	2.5	2.1
10	Carrizo Plain	4.9	6.3	5.6	2.7	3.5	3.1	4.0	5.0	4.5	2.7	3.7	3.2	4.9	6.4	5.7	2.1	2.6	2.3	2.0	2.6	2.3
11	Rafael/Big Spring	4.6	6.1	5.3	2.4	3.3	2.8	3.7	4.8	4.2	2.5	3.5	3.0	4.6	6.1	5.4	1.9	2.5	2.2	1.7	2.5	2.1
12	Santa Margarita	3.1	4.3	3.7	1.4	2.1	1.7	2.4	3.4	2.9	1.5	2.3	1.9	3.1	4.3	3.7	1.3	1.8	1.6	1.1	1.7	1.4
13	Atascadero/Templeton	3.1	4.3	3.7	1.4	2.1	1.7	2.4	3.4	2.9	1.5	2.3	1.9	3.1	4.3	3.7	1.3	1.8	1.6	1.1	1.7	1.4
14	Salinas/Estrella	3.7	4.9	4.3	1.8	2.6	2.2	3.3	4.3	3.8	1.9	2.8	2.3	3.7	5.0	4.3	1.6	2.1	1.8	1.4	2.0	1.7
15	Cholame Valley	4.7	6.1	5.4	2.4	3.2	2.8	3.8	4.9	4.4	2.5	3.4	2.9	4.8	6.2	5.5	1.8	2.3	2.0	1.9	2.6	2.2
16	Nacimiento	3.1	4.3	3.7	1.4	2.1	1.7	2.4	3.4	2.9	1.5	2.3	1.9	3.1	4.3	3.7	1.3	1.8	1.6	1.1	1.7	1.4

[a] Accounts for multi-cropping (assumes 3 vegetable crops planted per acre per year for WPA 1-7; assumes 2 vegetable crops planted per acre per year for WPA 8-16)

TABLE A3
EXISTING AGRICULTURAL WATER DEMAND (AFY) BY CROP GROP AND WATER PLANNING AREA

WPA #	WPA Name	Alfalfa (AFY)			Citrus (AFY)			Deciduous (AFY)			Nursery (AFY)			Pasture (AFY)			Vegetable (AFY)[a]			Vineyard (AFY)		
		Low	High	Med	Low	High	Med	Low	High	Med	Low	High	Med	Low	High	Med	Low	High	Med	Low	High	Med
1	San Simeon	0	0	0	9	24	17	0	0	0	0	0	0	0	0	0	0	0	0	33	65	49
2	Cambria	0	0	0	165	424	295	24	47	36	1	2	2	0	0	0	248	343	295	3	30	17
3	Cayucos	0	0	0	220	471	345	0	0	0	0	0	0	0	0	0	146	198	172	1	4	2
4	Morro Bay	0	0	0	753	1,206	979	0	0	0	0	0	0	82	120	101	796	1,038	917	43	81	62
5	Los Osos	0	0	0	0	0	0	6	8	7	125	209	167	1,176	1,725	1,451	1,444	1,883	1,664	1	1	1
6	San Luis Obispo/Avila	0	0	0	241	408	324	304	466	385	48	85	67	515	773	644	1,512	1,991	1,752	279	594	436
7[b]	South Coast	0	0	0	5,892	8,886	7,389	68	89	78	324	510	417	1,539	2,190	1,864	5,974	7,718	6,846	2,458	4,192	3,325
8	Huasna Valley	0	0	0	48	65	56	18	23	20	0	0	0	0	0	0	392	508	450	845	1,206	1,026
9	Cuyama Valley	0	0	0	0	0	0	2,448	3,236	2,842	0	0	0	0	0	0	22,287	28,861	25,574	377	538	457
10	Carrizo Plain	0	0	0	693	911	802	0	0	0	0	0	0	0	0	0	0	0	0	0	0	0
11	Rafael/Big Spring	0	0	0	0	0	0	0	0	0	0	0	0	0	0	0	0	0	0	0	0	0
12	Santa Margarita	48	68	58	0	0	0	18	25	21	0	0	0	266	358	312	0	0	0	1,055	1,709	1,382
13	Atascadero/Templeton	0	0	0	46	70	58	1,799	2,516	2,158	123	194	159	2,851	3,827	3,339	28	38	33	3,718	6,026	4,872
14	Salinas/Estrella	3,053	4,182	3,617	607	859	733	1,981	2,672	2,327	151	223	187	7,447	9,770	8,609	4,160	5,463	4,812	38,080	56,562	47,321
15	Cholame Valley	0	0	0	65	87	76	0	0	0	0	0	0	0	0	0	0	0	0	0	0	0
16	Nacimiento	0	0	0	65	99	82	1,970	2,755	2,362	0	0	0	33	46	39	0	0	0	1,054	1,709	1,381
Total		**3,101**	**4,250**	**3,676**	**8,804**	**13,509**	**11,157**	**8,636**	**11,837**	**10,237**	**773**	**1,224**	**998**	**13,908**	**18,808**	**16,358**	**36,988**	**48,043**	**42,515**	**47,946**	**72,716**	**60,331**

[a] Accounts for multi-cropping (assumes 3 vegetable crops planted per acre per year for WPA 1-7; assumes 2 vegetable crops planted per acre per year for WPA 8-16)

[b] The agricultural demand for WPA 7 in this table only includes areas outside of the NCMA, NMMA, and SMVMA.

TABLE A4
PROJECT FUTURE AGRICULTURAL WATER DEMAND (AFY) BY CROP GROP AND WATER PLANNING AREA

WPA #	WPA Name	Alfalfa (AFY)			Citrus (AFY)			Deciduous (AFY)			Nursery (AFY)			Pasture (AFY)			Vegetable (AFY)[a]			Vineyard (AFY)		
		Low	High	Med	Low	High	Med	Low	High	Med	Low	High	Med	Low	High	Med	Low	High	Med	Low	High	Med
1	San Simeon	0	0	0	9	22	16	0	0	0	0	0	0	0	0	0	0	0	0	5	42	23
2	Cambria	0	0	0	185	472	329	25	47	36	1	2	1	0	0	0	493	672	582	35	298	166
3	Cayucos	0	0	0	288	608	448	0	0	0	0	0	0	0	0	0	139	187	163	3	10	6
4	Morro Bay	0	0	0	764	1,208	986	0	0	0	0	0	0	76	110	93	797	1,027	912	52	96	74
5	Los Osos	0	0	0	22	35	29	5	8	7	117	193	155	1,103	1,592	1,347	1,502	1,937	1,720	1	1	1
6	San Luis Obispo/Avila	0	0	0	233	390	311	287	435	361	45	78	62	483	713	598	1,490	1,939	1,715	272	567	420
7[b]	South Coast	0	0	0	5,606	8,355	6,981	121	155	138	304	471	388	1,914	2,681	2,297	5,899	7,531	6,715	2,767	4,638	3,703
8	Huasna Valley	0	0	0	46	62	54	17	22	20	9	13	11	448	592	520	379	485	432	1,166	1,644	1,405
9	Cuyama Valley	0	0	0	0	0	0	2,366	3,090	2,728	0	0	0	0	0	0	22,506	28,802	25,654	366	516	441
10	Carrizo Plain	0	0	0	672	872	772	4	5	5	0	0	0	0	0	0	7	9	8	0	0	0
11	Rafael/Big Spring	0	0	0	0	0	0	0	0	0	0	0	0	0	0	0	0	0	0	0	0	0
12	Santa Margarita	46	64	55	5	8	7	21	29	25	0	0	0	296	410	353	0	0	0	1,356	2,169	1,762
13	Atascadero/Templeton	0	0	0	75	113	94	1,898	2,624	2,261	118	183	151	2,539	3,515	3,027	74	99	87	5,040	8,062	6,551
14	Salinas/Estrella	2,925	3,946	3,436	700	978	839	2,569	3,423	2,996	150	217	183	6,969	9,366	8,167	4,060	5,270	4,665	43,365	63,625	53,495
15	Cholame Valley	0	0	0	63	83	73	0	0	0	0	0	0	0	0	0	0	0	0	0	0	0
16	Nacimiento	0	0	0	66	99	83	2,064	2,853	2,459	0	0	0	31	43	37	0	0	0	2,577	4,122	3,350
	Total	**2,972**	**4,011**	**3,491**	**8,733**	**13,306**	**11,020**	**9,376**	**12,690**	**11,033**	**744**	**1,158**	**951**	**13,858**	**19,024**	**16,441**	**37,346**	**47,957**	**42,652**	**57,005**	**85,790**	**71,397**

[a] Accounts for multi-cropping (assumes 3 vegetable crops planted per acre per year for WPA 1-7; assumes 2 vegetable crops planted per acre per year for WPA 8-16)
[b] The agricultural demand for WPA 7 in this table only includes areas outside of the NCMA, NMMA, and SMVMA.

TABLE A5
CLIMATE GROUP FOR CROP EVAPOTRANSPIRATION BY WPA

WPA#	WPA	Assigned Climate Group
1	San Simeon	San Simeon
2	Cambria	San Simeon
3	Cayucos	San Simeon
4	Morro Bay	Morro Bay
5	Los Osos	Morro Bay
6	San Luis Obispo/Avila	San Luis Obispo
7	South Coast	Arroyo Grande/Nipomo
8	Huasna Valley	Cuyama
9	Cuyama Valley	Cuyama
10	Carrizo Plain	Cuyama
11	Rafael/Big Spring	Cuyama
12	Santa Margarita	Atascadero
13	Atascadero/Templeton	Atascadero
14	Salinas/Estrella	Paso Robles
15	Cholame Valley	Blackwells Corner
16	Nacimiento	Atascadero

[a] Climate Groups were determined by looking at available Eto by WPA

TABLE A6
REFERENCE CROP EVAPOTRANSPIRATION (inches/month)[a]

Month	Arroyo Grande	Blackwells Corner	Morro Bay	Paso Robles	San Luis Obispo	San Simeon	Nipomo	Atascadero	Cuyama
January	2.0	1.4	2.0	1.6	2.0	2.0	2.2	1.2	2.1
February	2.2	2.1	2.2	2.0	2.2	2.0	2.5	1.5	2.4
March	3.2	3.8	3.1	3.2	3.2	2.9	3.8	2.8	3.8
April	3.8	5.4	3.5	4.3	4.1	3.5	5.1	3.9	5.4
May	4.3	7	4.3	5.5	4.9	4.2	5.7	4.5	6.9
June	4.7	7.8	4.5	6.3	5.3	4.4	6.2	6	7.9
July	4.3	8.5	4.6	7.3	4.6	4.6	6.4	6.7	8.5
August	4.6	7.7	4.6	6.7	5.5	4.3	6.1	6.2	7.7
September	3.6	5.8	3.8	5.1	4.4	3.5	4.9	5	5.9
October	3.2	3.9	3.5	3.7	3.5	3.1	4.1	3.2	4.5
November	2.4	1.9	2.1	2.1	2.4	2.0	2.9	1.7	2.6
December	1.7	1.2	1.7	1.4	1.7	1.7	2.3	1	2
Total (in/yr)	40.0	56.5	39.9	49.2	43.8	38.2	52.2	43.7	59.7

[a] The ETo values in this table were derived from: CIMIS, 2009; DWR, 1999; University of California, 1987; Snyder et al., 1987

TABLE A7
CROP COEFFICIENTS FOR EACH CROP GROUP

Month	Alfalfa	Citrus	Deciduous	Nursery	Pasture	Vegetables	Vineyard
January	0.00	0.56	0.00	0.50	0.00	0.00	0.00
February	0.00	0.56	0.00	0.50	0.00	0.00	0.00
March	0.90	0.56	0.60	0.50	1.00	0.00	0.00
April	0.90	0.56	0.70	0.50	1.00	0.00	0.00
May	0.90	0.56	0.80	0.50	1.00	0.00	0.60
June	0.90	0.56	0.90	0.50	1.00	0.00	0.70
July	1.00	0.56	1.00	0.50	1.00	0.00	0.60
August	1.00	0.56	1.00	0.50	1.00	1.00	0.50
September	1.10	0.56	0.90	0.50	1.00	1.00	0.30
October	1.00	0.56	0.80	0.50	1.00	1.00	0.10
November	0.00	0.56	0.00	0.50	0.00	1.00	0.00
December	0.00	0.56	0.00	0.50	0.00	1.00	0.00

[a] Adapted from DWR 113-3 (DWR, 1974), UC Leaflet 21427 (Snyder et al., 1989a), UC Leaflet 21428 (Snyder et al., 1989b)

Crop Evapotranspiration (Etc). Crop evapotranspiration was calculated by multiplying the reference evapotranspiration and for each agricultural crop and area. Annual Crop evapotranspiration (AF/Ac/Yr) for each crop group and WPA is summarized in **Table A8**.

TABLE A8
ANNUAL CROP EVAPOTRANSPIRATION [a] (AF/Ac/Yr)
FOR EACH CROP GROUP AND WPA

WPA #	WPA Name	Alfalfa	Citrus	Deciduous	Nursery	Pasture	Vegetable	Vineyard
1	San Simeon	2.4	1.8	2.2	1.6	2.5	1.2	1.0
2	Cambria	2.4	1.8	2.2	1.6	2.5	1.2	1.0
3	Cayucos	2.4	1.8	2.2	1.6	2.5	1.2	1.0
4	Morro Bay	2.6	1.9	2.3	1.7	2.7	1.3	1.0
5	Los Osos	2.6	1.9	2.3	1.7	2.7	1.3	1.0
6	San Luis Obipso/Avila	2.8	2.0	2.5	1.8	3.0	1.5	1.2
7	South Coast	3.0	2.2	2.6	1.9	3.1	1.5	1.2
8	Huasna Valley	4.1	2.8	3.7	2.5	4.2	1.9	1.7
9	Cuyama Valley	4.1	2.8	3.7	2.5	4.2	1.9	1.7
10	Carrizo Plain	4.1	2.8	3.7	2.5	4.2	1.9	1.7
11	Rafael/Big Spring	4.1	2.8	3.7	2.5	4.2	1.9	1.7
12	Santa Margarita	3.1	2.0	2.8	1.8	3.2	1.4	1.3
13	Atascadero/Templeton	3.1	2.0	2.8	1.8	3.2	1.4	1.3
14	Salinas/Estrella	3.4	2.3	3.0	2.1	3.5	1.6	1.4
15	Cholame Valley	4.0	2.6	3.6	2.4	4.2	1.7	1.7
16	Nacimiento	3.1	2.0	2.8	1.8	3.2	1.4	1.3

[a] Crop evapotranspiration is equal to the product of crop coefficients and reference crop evapotranspiration

Effective Rainfall (ER). The effective rainfall was calculated for each area by utilizing historical annual precipitation in San Luis Obispo County and effective precipitation based on crop type and water planning area.

The historical yearly precipitation gages that were used for the water demand analysis are listed in **Table A9**. The rainfall from each of these gages was assigned to a particular water planning area. Due to substantial variability

TABLE A9
SAN LUIS OBISPO COUNTY RAINFALL STATIONS USED FOR ANALYSIS

Rainfall Station	Average (Inches/Yr)	County Gage #	Record
Santa Rosa Creek	27.5	169	1964-2003
Cayucos Creek	24.8	173.1	1965-2003
Baywood Park/Camp SLO	18.2	177/224	1967-2003
CalPoly	22.2	1	1870-2003
Lopez Dam	19.6	178.1	1968-2003
Nipomo	16.6	38	1921-2003
Santa Maria Valley	15.3	23	1910-2003
Paso Robles	15.2	10	1887-2003
AMWC	17.4	34	1916-2003
Santa Margarita	24.3	9a	1972-2003
Carrizo Plain	10.9	151.2	1966-2003
White Ranch	12.3	93	1931-2008
Oceano CSA #13	16.1	157.1	1959-2006

SOURCE: San Luis Obispo County, 2005 & 2009 http://www.slocountywater.org/site/Water%20Resources/Data/maps/data.htm

within WPA 7, ESA used an average precipitation of Nipomo and Lopez Dam gages for this area. **Table A10** lists the range of effective rainfall percentage for each crop group.

TABLE A10
EFFECTIVE RAINFALL PERCENTAGE FOR EACH CROP GROUP[a]

Range	Alfalfa	Citrus	Deciduous	Nursery	Pasture	Vegetable[b]	Vineyard
Low	40%	40%	40%	30%	40%	15%	30%
High	60%	60%	60%	50%	60%	25%	50%

[a] Effective rainfall general ranges from 29% to 59% (Burt et al., 2002)
[b] Accounts for multi-cropping by reducing vegetable effective rainfall in half.

Frost Protection (FP). The sprinkler frost protection water requirement was estimated for grapes (throughout the County), as well as strawberries and blueberries (WPA 1, 7, 8, and 14). For vineyards, the frost threat occurs from March to April in San Luis Obispo County. For strawberries and blueberries in San Luis Obispo County, primarily in WPA 7 and 14, respectively the frost threat occurs from January to March. Sprinkler frost protection requires a large amount of water, which may be higher than a typical groundwater well can produce (Battany, 2009). Therefore, growers that use sprinkler frost protection will generally have large reservoirs on site or nearby. The frost protection values ESA used were 0.25 AF/Ac/Yr for vineyards throughout the County and 0.4 AF/Ac/Yr for strawberries and blueberries in WPA 1, 7, 8, and 14. This was based on information provided by the

UC Farm Advisors and input from the WRAC and other agricultural stakeholders. Details on how the numbers were determined for vineyards and strawberry frost protection are shown below.

Grapes

Sprinkler frost protection on vineyards will only occur where growers have access to a large reservoir onsite or nearby (Battany, 2009). Overhead sprinklers may operate from 4-6 hours per evening for 10-12 nights per year (San Luis Obispo County, 1998). System flow rates generally range from 40 to 50 gallons per minute per acre (gpm/Ac), 0.09 inches per hour (in/hr) and 0.11 in/hr, respectively. **Table A11** shows an example of yearly applied water for frost protection on a vineyard depending on minutes of runtime and a system flow rate of 50 gpm/Ac. To determine the percentage of acreage that uses sprinkler frost protection would require a detailed look at all vineyards on aerial photography and/or discussions with all vineyard owners. The amount of frost protection on vineyards varies from year to year and farm to farm. For purposes of this analysis, ESA has assumed that approximately 50% of the vineyards use frost protection. Therefore, ESA used 0.25 AF/Ac/Yr for frost protection on grapes throughout the County.

TABLE A11
RANGE OF ANNUAL APPLIED WATER FOR FROST PROTECTION ON A TYPICAL VINEYARD (AF/AC/YR)

Hours per night	Nights per year	Annual Applied Water (AF/Ac/Yr)
4	10	0.34
	11	0.38
	12	0.41
5	10	0.43
	11	0.47
	12	0.52
6	10	0.52
	11	0.57
	12	0.62

SOURCE: San Luis Obispo County, 1998

Strawberries and Blueberries

The amount of frost protection on strawberries varies from year to year and farm to farm. Sprinklers typically operate for 6 to 10 hours a night for 8-12 nights per year (San Luis Obispo County, 1998). System flow rates for frost protection of strawberries are approximately 45 gpm/Ac (0.10 in/hr). **Table A12** shows an example of yearly applied water for frost protection on strawberries depending on minutes of runtime and a system flow rate of 45 gpm/Ac. For purposes of the agricultural water demand analysis, strawberries and blueberries are grouped in the deciduous group. To account for the frost protection of strawberries and blueberries on some of the crops, 0.4 AF/Ac/Yr was added to the deciduous crop in WPA 1, 7, 8, and 14.

TABLE A12
RANGE OF ANNUAL APPLIED WATER FOR FROST PROTECTION ON STRAWBERRIES (AF/AC/YR)

Hours per night	Nights per year	Annual Applied Water (AF/Ac/Yr)
6	8	0.48
	10	0.60
	12	0.72
8	8	0.64
	10	0.80
	12	0.96
10	8	0.80
	10	1.00
	12	1.20

SOURCE: San Luis Obispo County, 1998

Leaching Requirements (LR). Leaching requirements, amount of over watering necessary to remove salts from the soil, were assumed to be satisfied by rainfall in the majority of the coastal areas (WPA 1 to WPA 6). Leaching requirements for the Paso Robles Basin were presented by Fugro and Cleath (2002). ESA used these estimates, approximately 5 percent to 16 percent, to identify existing LR for inland areas. **Table A12** includes the leaching requirement percentage used for crop groups located in inland WPAs (WPA 8-16). Mark Gaskell, UC Farm Advisor, stated that strawberries may have a leaching requirement of 10 to 20 percent (Gaskell, 2009). Therefore, ESA used a leaching requirement of 11 percent for existing demand in WPA 7. The future leaching requirements may be greater based on a build-up of salts in the soil (Battany, 2008; Gaskell, 2009). Therefore, the future leaching requirements were assumed to be 1 to 2 percent higher than existing leaching requirements.

TABLE A12
LEACHING REQUIREMENTS FOR INLAND AREAS IN SAN LUIS OBISPO COUNTY

	Leaching Requirements (%)	
Crop Group	Existing	Future
Alfalfa	8%	10%
Nursery	5%	7%
Pasture	8%	10%
Citrus	5%	7%
Deciduous	11%	13%
Vegetable	8%	10%
Vineyard	16%	18%

SOURCE: Existing leaching requirements were adapted from Fugro and Cleath, 2002 (Table 13)

Irrigation Efficiencies (IE). Irrigation efficiencies were calculated by utilizing distribution uniformity and losses provided by the San Luis Obispo County/Santa Barbara County Cachuma Resource Conservation District

(CRCD), San Luis Obispo County Coastal Resources Conservation District, vineyard owners, and recent studies. Additionally, ESA incorporated input from the WRAC and other agricultural stakeholders.

Higher irrigation efficiencies depend primarily on improving system distribution uniformity, decreasing surface losses, and reducing scheduling errors. Irrigation efficiencies are difficult to measure and are often estimated according to the system type, special practices, and distribution uniformities. Micro irrigation systems include micro-sprinklers, drip emitters, and drip tape. Micro systems tend to have higher irrigation efficiencies than sprinkler systems (**Table A13**). Regardless, there is a range between potential and actual performances of irrigation systems.

TABLE A13
ESTIMATED IRRIGATION EFFICIENCY RANGES BASED ON SYSTEM TYPE

	Estimated Irrigation Efficiency (IE) (%)		
Irrigation System Type	**Maximum Potential IE (includes excellent design and excellent management)**	**Average IE (includes excellent design and average management)**	**Low IE (includes average design and below average management)**
Sprinkler	80-85	75	50-60
Micro	90-95	85	60-70

SOURCE: Peterson, 2009a

Local farm advisors were contacted regarding the types of irrigation systems on crop groups. **Table A14** summarizes the type of irrigation systems used on specific crops. In 1998 MWP, the majority of vegetables were irrigated with surface systems. Over the last 10 years, surface irrigation systems have been converted to micro and sprinkler irrigation systems (Peterson, 2009a).

TABLE A14
ESTIMATES OF CURRENT IRRIGATION SYSTEM TYPES BY CROP GROUP

	Percentage of Acreage with Irrigation System Type (%)		
Crop Group	**Surface**	**Sprinkler**	**Micro**
Alfalfa	0	100	0
Citrus (permanent)	0	20	80
Deciduous (permanent)	0	20	80
Nursery	0	50	50
Pasture	0	100	0
Permanent	0	20	80
Vegetable	0	40	60
Vineyard	0	0	100

[a] Acreage was placed in a particular category according to the system they use most of the season.

SOURCE: Peterson, 2009b

Although measuring irrigation efficiency is difficult, a system's distribution uniformity can be quantified and measured in the field. The relationship between distribution uniformity and irrigation efficiency can be expressed as follows:

Irrigation Efficiency=Distribution Uniformity x (1-Losses)

The CRCD conducts irrigation evaluations with the Mobile Irrigation Lab. The CRCD has completed more than 325 evaluations related to irrigation efficiencies throughout San Luis Obispo and Santa Barbara Counties. The irrigation specialists provided estimates presented in Table A9 and Table A10, as well as information on distribution uniformity. Recent evaluations have shown that the distribution uniformity is approximately 75%, which is 5% higher than in 1998 (Peterson, 2009a). This change is primarily due to the change from surface to micro and sprinkler systems.

The sprinkler systems are associated with distribution uniformities of approximately 75% and micro systems are associated with distribution uniformities of 85%. For the purposes of estimating applied water, irrigation efficiencies were assigned to crop group according to the primary irrigation system type. **Table A15** includes existing irrigation efficiencies for crop groups**.** Irrigation efficiencies are likely to continue to improve in the future, due to improvements in equipment, economic pressure (increased electricity costs if groundwater levels decline), or have economic incentives (Isensee, 2009). **Table A16** includes projected future irrigation efficiencies for crop groups.

TABLE A15
EXISTING IRRIGATION EFFICIENCIES FOR CROP GROUPS

	Existing Irrigation Efficiency Range (%)	
Crop Group	**Low**	**High**
Alfalfa	60%	75%
Nursery	60%	75%
Pasture	60%	75%
Citrus & Deciduous	70%	85%
Vegetable	70%	85%
Vineyard	70%	85%

SOURCE: Peterson, 2009a and 2009b

TABLE A16
FUTURE PROJECTED IRRIGATION EFFICIENCIES FOR CROP GROUPS

	Projected Future Irrigation Efficiency Range (%)	
Crop Group	**Low**	**High**
Alfalfa	65%	80%
Nursery	65%	80%
Pasture	65%	80%
Citrus & Deciduous	75%	90%
Vegetable	75%	90%
Vineyard	75%	90%

SOURCE: Peterson, 2009a and 2009b

References

Battany, M., Paso Robles Soil Salinity Survey, Part II, Grape Notes, San Luis and Santa Barbara Counties, June 2008.

Battany, M., personal communication, e-mail, December 10, 2009.

Burt, C.M., Mutziger, A., Howes, D.J., and Solomon, K.H., Evaporation from Irrigated Agricultural Land in California, January 2002.

California Irrigation Management Information System (CIMIS), http://wwwcimis.water.ca.gov/cimis/welcome.jsp accessed September 30, 2009.

Department of Water Resources (DWR), Vegetative Water Use in California, Bulletin 113-3, 1974

Department of Water Resources (DWR) and UC Dept. of Land, Air & Water Resources, Reference Evapotranspiration Zones Map, 1999.

Fugro West, Inc., Cleath and Associates, Final Report Paso Robles Groundwater Basin Study, 2002.

Gaskell, M., e-mail, personal communication, December 11, 2009.

Isensee, Michael, San Luis Obispo County Agricultural Commissioner, personal communication, e-mail, November 9, 2009.

Peterson, Kevin, Irrigation Specialist, Personal Communication, e-mail, CRCD, 12 November, 2009a.

Peterson, Kevin, Irrigation Specialist, Personal Communication, e-mail, CRCD, 28 September, 2009b.

San Luis Obispo County, 1998 Master Water Plan, 1998.

San Luis Obispo County, Water Years 2001-2002 and 2002-2003 Hydrologic Report, 2005

San Luis Obispo County, San Luis Obispo County Water Resources Division of Public Works Water Resources Data, www.slocountywater.org/site/Water%20Resources/Data/maps/data.htm, accessed December 8, 2009.

Snyder, R.L., W.O. Pruitt, and D.A. Shaw, *Determining daily reference evapotranspiration (Eto)*, Cooperative Extension, Univ. California, Berkeley, CA, Leaflet 21426, 12 pp., 1987.

Snyder, R. L., Lanini, B. J., Shaw, D. A., and Pruitt, W. O. *Using reference evapotranspiration (ETo) and crop coefficients to estimate crop evapotranspiration (ETc) for agronomic crops, grasses, and vegetable crops*, Cooperative Extension, Univ. California, Berkeley, CA, Leaflet No. 21427, 12 p., 1989a.

Snyder, R. L., Lanini, B. J., Shaw, D. A., and Pruitt, W. O. *Using reference evapotranspiration (ETo) and crop coefficients to estimate crop evapotranspiration (ETc) for trees and vines*. Cooperative Extension, Univ. California, Berkeley, CA, Leaflet No. 21428, 8 p, 1989b.

University of California, Reference Evapotranspiration (ETo) for California, (Bulletin 1922), W.O. Pruitt, et al., Division of Agricultural and Natural Resources, 1987.