Appendix A

Association Memorandum of Understanding

MOU

ORIGINAL COPY

5/96

MEMORANDUM OF UNDERSTANDING RELATING TO THE FORMATION AND OPERATION OF THE STANISLAUS AND TUOLUMNE RIVERS GROUNDWATER BASIN ASSOCIATION

1. PARTIES:

The Parties to this Memorandum of Understanding (MOU) are: County of Stanislaus, a political subdivision of the State of California; Oakdale Irrigation District, a California irrigation district; the City of Oakdale, a California public agency; the City of Riverbank, a California public agency; the City of Modesto, a California public agency; and Modesto Irrigation District, a California irrigation district.

2. RECITALS:

This MOU is entered into with regard to the following facts and circumstances, among others:

2.1 Groundwater and surface water resources within the Stanislaus and Tuolumne Rivers Groundwater Basin are vitally important resources, in that they provide the foundation to maintain current and fulfill future environmental, agricultural, domestic, municipal and industrial needs, as well as other needs, and to maintain the economic viability and prosperity of the Basin area.

2.2 Agriculture has been prominent in making Stanislaus County one of the world's foremost agricultural areas, and has played a major role in the development of the economy of Stanislaus County; in an era of increasing competition for the area's finite water resources, it is important to understand and plan for the utilization of all the area's water resources in order to preserve all elements of the local economy vital to the area's well being.

2.3 In 1994, the Parties to this MOU, together with others, created an association known as the Stanislaus and Tuolumne Rivers Groundwater Association (the "former Association").

2.4 The former Association ceased to exist as of December 31, 1997, pursuant to the terms of the agreement among the Parties creating it.

2.5 During the period following termination of the former Association, the Parties have continued to conduct business that might have been conducted by the former Association.

2.6 The Parties desire to form an association, to provide a mechanism for the Parties to cooperate in working toward the purposes and goals established in this MOU.

2.7 **Purposes and Goals:** The purposes and goals for the formation of the Association are:

2.7.1 To determine and evaluate the Basin's existing groundwater supply.

2.7.2 To promote coordination of groundwater management planning activities developed during the first term of this MOU;

2.7.3 To develop a hydrologic groundwater model of the groundwater supplies;

2.7.4 To determine the Basin's need for additional or improved water extraction, storage, delivery, conservation, and recharge facilities; and

2.7.5 To provide information and guidance for the management, preservation, protection and enhancement of groundwater quality and quantity in the Basin.

2.8 The Parties believe that independent and non-coordinated action by water providers and users within the Basin could result in unregulated competition for finite resources resulting in adverse impacts to the groundwater and surface water supplies within the Basin.

2.9 The Parties believe that a groundwater management plan or plans, whether developed under the umbrella of the Association or through individual agency efforts coordinated through the Association, for water suppliers and water users within the Basin is necessary to protect the groundwater and surface water resources and to meet the needs of all uses of such resources within the Basin.

2.10 A desirable step in the implementation of such a plan is the development and the proper use and application of a hydrologic groundwater model.

2.11 Because of the enactment of State legislation that has extended additional authority for local groundwater management pursuant to Water Code section 10750 et seq. (Assembly Bill 3030 adopted in 1992), it is now clear to the Parties that local management of water resources is necessary and desirable in order that local control be maintained over such resources.

2.12 The Parties hereto desire to enter into this MOU in order to reauthorize the Association to promote certain goals and provide coordinated planning to make the best use of available water resources to meet the needs of the Parties and respective constituents and service territories in the mutual best interests of the inhabitants and resources of the Basin.

2.13 In forming the Association, it is the Parties' desire that the Association not be formed as a separate governmental entity, nor have any enforceable regulatory

authority over any Party's facilities or any Party's respective surface water or groundwater supplies or rights nor duplicate any services, duties or authority of any other agency.

3. AGREEMENT:

The Parties agree as follows:

4. DEFINITIONS:

The following terms, whether in the singular or the plural, and when used herein with initial capitalization, shall have the meanings specified in this Section 4:

4.1 **Annual Budget:** A budget will be developed only after the Association's governing body has approved certain project(s) to advance the goals and objectives of this MOU.

4.2 **Basin:** The Stanislaus and Tuolumne Rivers Groundwater Basin, which is geographically defined as that area in the State of California bounded on the west by the San Joaquin River; on the north by the Stanislaus River, on the east by the base of the Sierra Nevada foothills; and on the south by the Tuolumne River, and includes the area of land overlying that basin and all tributaries therein.

4.3 **Committee:** That body, consisting of one representative from each of the Parties, which governs the Association, as established pursuant to Section 5.2 of this MOU.

4.4 **Budget:** Either an Annual Budget or Initial Budget necessary to complete necessary projects pursuant to Section 4.1 of this MOU.

4.5 **Coordinator:** The individual appointed by the Committee pursuant to Section 6 is otherwise responsible for coordinating a work plan.

4.6 **Governing Bodies:** The legislative bodies of the governmental Parties to this MOU.

4.7 **MOU:** This Memorandum of Understanding Relating to the Formation and Operation of the Stanislaus and Tuolumne Rivers Groundwater Basin Association.

4.8 **Parties:** Each of those entities named in Section 1 of this MOU, or those Parties added pursuant to section 5.4 of this MOU.

4.9 **Voting Percentage:** A Party's Voting Percentage as set forth in Section 8.3 of this MOU.

5. THE ASSOCIATION

5.1 Powers and Purposes: The Parties to this MOU hereby form the Stanislaus and Tuolumne Rivers Groundwater Basin Association.

5.1.1 The purpose of the Association is to provide a forum in which the Parties can work cooperatively; to combine the available talent of the Parties' respective staffs; and to accomplish the purposes described in Section 2 of this MOU.

5.1.2 This Association shall have no enforceable regulatory authority over any person or entity, including Parties or Parties' facilities or rights.

5.1.3 The Association shall have the power to sue or be sued in its own name.

5.2 **Committee:** The Association shall be governed by a Committee whose membership and responsibilities are set forth herein.

5.2.1 Each Party shall designate one person to serve as a member of the Committee, and one or more alternates. The names of the member and alternates, shall be submitted to the Coordinator. Each member of the Committee and each alternate, shall serve at the pleasure of the Party appointing such member. A Party's alternate may serve in the place of that Party's member in the absence of such member and, in such case, the alternate shall have the powers of the member.

5.2.2 The Committee shall elect a chair and vice chair from its members at the first meeting of each calendar year. The chair will be responsible for presiding over meetings of the Committee, and shall notify committee members and the Coordinator of meetings of the Committee. The Committee will establish a date, time and place for its regular meetings, and may hold special meetings when required for the proper transaction of business. All meetings of the Committee shall be held in accordance with the provisions of the Brown Act, California Government Code Section 54950 et seq. The Committee will prescribe such procedures for the conduct of its business as it deems appropriate.

5.2.3 A quorum shall consist of a simple majority of the Voting Percentage of the Committee, except that less than a quorum may adjourn meetings of the Committee from time to time. Alternatively, the Coordinator may adjourn a meeting of the Committee to a specified time, date and place if there is less than a quorum of members present for a meeting.

5.2.4 The Committee shall have the following duties and responsibilities:

a. Develop and implement the activities, including work schedule, designed to achieve the objectives of the Association as set forth in Section 2 of this MOU.

b. Enter into contracts, and approve all amendments thereto, for and on behalf of the Association, necessary to carry out the powers and duties of the Association.

c. Establish an Annual Budget for the Association, and approve proposed revisions to such budget, provided that no action of the Association shall be deemed to bind any party to contribute such funds absent approval of Governing Bodies.

d. Recommend for approval by the Governing Bodies Budget(s) necessary to carry out proposed project(s).

e. Establish such committees as may be necessary or desirable to carry out the purposes of the Association, and to exercise general supervision over such committees.

5.2.5 Except for actions for which a different approval standard is set forth in this MOU, all actions of the Committee shall be approved by a majority of the members present.

5.3 **Staff:** The Association shall have the authority to hire or retain agents, contractors and consultants as the Committee shall determine necessary and appropriate.

5.4 **New Parties**: New parties may join the Association, provided that they meet the requirements set forth in this Section 5.4.

5.4.1 Any county or local public agency, whose territory or service area includes land located within that portion of Stanislaus County east of the San Joaquin River, which provides water service within its service area, and whose service area includes all or a portion of the Stanislaus and Tuolumne Rivers groundwater basin (as defined in Section 4.2), may apply for membership in the Association.

5.4.2 A water corporation regulated by the California Public utilities Commission, or a mutual water company whose service area includes land located within that portion of Stanislaus County east of the San Joaquin River, which provides water service within its service area, and whose

service area includes all or a portion of a ground water basin, may apply for membership in the Association.

5.4.3 Application for membership shall be subject to approval by the Governing Bodies of the Parties; approval shall require the affirmative vote of the Governing Bodies of a simple majority of the Parties.

5.4.4 Any new Party to this Agreement shall, as a condition of admission to the Association, be required to first pay its proportionate share of back contributions as determined by the Committee.

6. COORDINATOR:

6.1 **Appointment:** The Committee shall appoint a Coordinator, who shall have the duties and responsibilities set forth in this Section 6. The Coordinator shall be an employee of a Party, unless otherwise approved by the Committee.

6.2 **Duties and Responsibilities:** The Coordinator will have the following duties and responsibilities:

6.2.1 Develop and submit for consideration of approval by the Committee a work plan and schedule of activities designed to accomplish the goals of the Association as established in this MOU or as may be directed by the Committee.

6.2.2 Propose an Annual Budget, and from time to time such revisions as the Coordinator may feel necessary or desirable, to the Committee for its review and approval.

6.2.3 Submit to the Committee as directed by the Committee, a progress report as to the Association's activities, and a Budget report which compares expenditures with the adopted Budget.

6.2.4 Execute and administer contracts as directed by the Committee.

6.2.5 Maintain proper records and accounts of Work performed by the Association and its committees.

6.2.6 Receive and disburse funds at or under the direction of the Committee.

6.2.7 Act as secretary/treasurer to the Association, and acting in that capacity, prepare, record and distribute minutes of all Committee meetings.

6.2.8 Perform such other actions as may be necessary or desirable to promote the work of the Committee and the Association.

7. ASSOCIATION BUDGET AND COSTS:

7.1 **Budget Cycle:** The budget cycle of the Association shall be on a calendar year basis.

7.2 **Annual Budget:** The Coordinator shall prepare an annual financial budget for each calendar year that the Committee determines certain projects are necessary. The Coordinator's proposed Annual Budget should be delivered to the Committee members no later than June 1 of each year. The Committee should approve or revise the proposed Annual Budget and distribute the proposed Annual Budget to each Party no later than July 1 of each year. The Committee should meet to review input from the Parties' Governing Bodies no later than August 1, and should approve a final budget no later than September 1. The respective Governing Bodies of the Parties should review the Annual Budget of the Committee no later than October 1 of each year and notify the Coordinator that it has allocated or appropriated its respective contribution to the annual Budget no later than October 15 of each year. The Committee shall then adopt and approve the annual Budget and have it in place and effect by January 1 of that budget year as approved by the Parties.

7.3 **Allocation of Funds:** Within the annual financial budget adopted pursuant to Section 7.2, the Committee shall have the authority to make minor adjustments in the allocation of funds between budget categories; provided, however, that the cumulative change in the budget category does not exceed ten percent (10%) of the amount authorized in the Annual Budget and the total amount of the Annual Budget is not increased. Other budget adjustments require approval of the Governing Bodies.

7.4 **Budget Increases:** Increases in the total amount of a Budget must be approved by the Governing Bodies of a simple majority of the Parties.

7.5 **Failure to Pay**: If any Party fails to pay its respective share of any Budget or Budget increase when due, whether or not that Party's Governing Body approved the Annual Budget or the Budget increase, then that Party shall be ineligible to vote on any subject or issue unless such failure is excused by the Committee. During any period of time during which a Party is ineligible to vote on a matter by reason of the application of this Section 7.5, such Party shall not be counted as a Party in determining a quorum, or in determining a "majority" with regard to the approval of any action. In order to restore its eligibility to vote, a Party must be current on all amounts due, including any expenditures approved by the Association while such Party was ineligible to vote.

7.6 **Expenditures:** Association funds may be properly expended for all costs approved by the Committee and properly incurred in the performance of the work

approved by the Committee, or under such authority as may be delegated to the Coordinator by the Committee.

7.7 **Non-Reimbursable Costs:** Costs incurred by any Party in connection with any functions of the Association, or any committee established by the Committee, and expenses of a party's personnel including, without limitation, the regular and alternate members appointed by a Party to any committee while performing such functions, shall not be reimbursed by the Association except upon approval of the Committee, provided that a Party shall be reimbursed for the services performed by such Party's employees while serving as staff to the Association as approved through the Budget process.

8. FUNDING AND VOTING PERCENTAGES:

8.1 **Funding:** Each Party shall be responsible for its proportionate share of the funding requirements of the Association. The proportionate shares of each Party shall be determined by dividing the funding requirements of the Association by the number of Parties. During Committee approval of certain projects that beneficially affect one Party over another, equitable project funding shall be determined by the Committee.

The Parties shall provide funding consistent with the Budgets adopted by the Committee at times set forth in such Budgets, or on call of the Coordinator. Funding needs of the Association payable by the Parties shall be determined by the Committee, and such funds shall be transmitted by the Party to the Coordinator within sixty (60) days of project approval. Upon receipt, the Coordinator will immediately deposit funds in an interest-bearing bank account. The funds in such account shall remain the property of each Party and interest earned thereon shall belong to each Party.

8.2 **Payment Reduction:** Each Party agrees that the Parties' respective obligations to make payments hereunder shall not be subject to any reduction, whether by offset, counter claim, recoupment or otherwise. A Party's funding contributions to this Association or a portion thereof may be reimbursed upon termination of that Party's participation in the Association and approval by a simple majority vote of the Committee.

8.3 **Voting Rights:** Each Party's representative on the Committee shall be entitled to one vote; provided, however, that if a matter being decided by the Committee will have a disproportionate effect on the financial obligations of the Parties as contemplated in Section 8.1, each Party shall be entitled to vote weighted in proportion to the financial obligation or benefit of the Parties.

8.4 **Modification by Party:** Funding Percentages and/or Voting Percentages may be changed only upon the approval of the Governing Bodies of a simple majority of the Parties.

9. RELATIONSHIP OF PARTICIPANTS:

9.1 **Each Party's Action is Independent of the Other**: The obligation of each Party to make payments under Section 8.1 of this MOU is an individual and several obligation and not a joint obligation of the Parties. Each Party shall be individually responsible for its own covenants, obligations and liabilities under this MOU. No Party shall be under the control of or shall be deemed to control any other Party or the Parties collectively. No Party shall be the agent of or have the right or power to bind any other Party without such Party's express written consent, except as expressly provided in this MOU.

9.2 **Indemnity:** No Party, nor any officer or employee of a Party, shall be responsible for any damage or liability occurring by reason of anything done or omitted to be done by another Party under or in connection with this MOU. The Parties further agree, pursuant to Government Code section 895.4, that each Party shall fully indemnify and hold harmless each other Party and its agents, officers, employees and contractors from and against all claims, damages, losses, judgments, liabilities, expenses and other costs, including litigation costs and attorney fees, arising out of, resulting from, or in connection with any work delegated to or action taken or omitted to be taken by such Party under this MOU.

In no event, except for any claim, demand, liability, loss or damage arising out of or resulting from any action taken or not taken by one Party at the direction of its directors, officers, or employees of management or administrative responsibility, which is knowingly or intentionally taken or not taken with conscience indifference to the consequences thereof or with the intent that injury or damage would result or would probably result therefrom, shall a Party be liable to any other Party for any indirect or consequential damage claim, demand, liability, loss, expense (including attorney's fees), or damage arising out of or in any way connected with this Agreement, including any negligence in connection therewith.

9.3 **No Creation of a Joint Powers Agency:** The Parties agree that by this MOU they do not intend to provide for the creation of an agency or entity which is separate from the Parties pursuant to Chapter 5 (commencing with Section 6500) of Division 7 of Title 1 of the Government Code, relating to the joint exercise of powers.

10. TERM OF THIS MOU: The term of this MOU shall commence on November 1, 2001 and shall terminate on December 31, 2006, or unless approved by letter of extension by each individual Party to this MOU. Any substantive change to this MOU will require a full evaluation prior to extension of the MOU.

Upon termination of this MOU, the Committee shall determine the assets and liabilities of the Association; make every effort to satisfy all obligations within sixty (60) days of the termination of the agreement; and distribute the remaining fund balance equitably to each Party in proportion to each Party's funding contribution to the Association.

Any work following the development of a groundwater management plan, or beyond the scope of developing such a plan, shall be done, if at all, pursuant to a separate agreement, among the entities desiring to pursue such work.

11. GENERAL PROVISIONS GOVERNING MOU:

11.1 **Invalidity of any Term not to Invalidate the Entire Memorandum:** In the event that any of the terms, covenants or conditions of this MOU or the application of any such term, covenant or condition shall be held invalid as to any Party, person or circumstance by any court of competent jurisdiction, all other terms, covenants or conditions of this MOU and their application shall not be affected thereby, but shall remain in full force and effect unless any such court holds that those provisions are not separable from all other provisions of this MOU.

11.2 **Construction of Terms:** This MOU is for the sole benefit of the Parties and shall not be construed as granting rights to any person other than the Parties or imposing obligations on a party to any person other than another party.

11.3 **Good Faith:** Subject to the right of a Party to withdraw or terminate its membership in the Association, each Party shall use its best efforts and work wholeheartedly and in good faith for the expeditious completion of the objectives of this MOU and the satisfactory performance of the terms and provisions contained herein.

11.4 **Withdrawal or Termination of Membership:** Except in the event of the termination of this MOU pursuant to Section 10, a Party who withdraws or terminates its membership in the Association shall not be entitled to a refund of its funding contributions. Any Party may terminate membership and withdraw from this Association upon thirty (30) days written notice of termination to the Association. If a Party withdraws from the Association when the Party is in arrears as to its funding contributions to the Association, that Party's entitlement to use any groundwater model or other work product of the Association as provided for herein shall be determined by the Committee.

11.5 **Amendment:** This MOU may be amended by first receiving the affirmative vote of the Governing Body of a simple majority of the Parties.

11.6 **Counterpart Execution:** This MOU may be executed in counterparts each of which shall be deemed an original but all of which together shall constitute one and the same instrument.

11.7 **Governance:** This MOU is made under and shall be governed by the laws of the State of California.

11.8 **Reasonable Delivery of Documents:** The Parties agree to act in good faith to promptly execute any documents that are necessary, or may become necessary, to implement activities approved by the Governing Bodies in the Annual Budget subject to the authority and the right of the Governing Bodies to terminate participation in this MOU.

IN WITNESS WHEREOF, the Parties have caused this MOU to be executed, each signatory hereto represents that he has been appropriately authorized to enter into this MOU on behalf of the Party for whom he/she signs.

Date: OCT 15 2001

COUNTY OF STANISLAUS, a political subdivision of the State of California

Chair, Board of Supervisors

Attest: Christine Ferraro
Secretary Clerk of the Board

Director, Dept. of Environmental Resources

Approved as to Legal Form:

John P. Doering
Deputy County Counsel

Date: September 3, 2002

OAKDALE IRRIGATION DISTRICT, a California irrigation district

President

Attest:
Secretary

Approved as to Legal Form:

Date: 10/23/01

CITY OF OAKDALE, a California public agency

City Manager

Attest: Rebecca A. Pelusso
City Clerk

Approved as to Legal Form:

Date: 10-23-01

CITY OF RIVERBANK, a California public agency

City Manager

Attest: Lori Grigsby
City Clerk

Approved as to Legal Form:

Date: October 9, 2001

CITY OF MODESTO, a California public agency

City Manager, JACK R. CRIST

Attest: Jean Zahr
City Clerk, JEAN ZAHR

Approved as to Legal Form:

MIKE MILICH, City Attorney

Date: 10-17-01

MODESTO IRRIGATION DISTRICT, a California irrigation district

Allen Short
General Manager

Approved as to Legal Form:

RESOLUTION NO. 2001-128
APPROVING THE MEMORANDUM OF UNDERSTANDING RELATING TO THE FORMATION AND OPERATION OF THE STANISLAUS AND TUOLUMNE RIVERS GROUND WATER BASIN ASSOCIATION

WHEREAS, Part 2.75 (commencing with Section 10750) of Division 6 of the Water Code (commonly referred to as AB3030) permits certain local agencies, including Modesto Irrigation District (the "District"), to adopt and implement a groundwater management plan; and

WHEREAS, the District recognizes that the groundwater and surface water resources within its service territory are vitally important to the well-being of the area's economy; and

WHEREAS, the District believes that it is in the best interests of the District and its inhabitants to study the groundwater basin and promote the formulation of a groundwater management plan for the entire groundwater basin lying between the Stanislaus and Tuolumne Rivers; and

WHEREAS, the District has been working with other water suppliers within the District's service territory in order to combine the talents and resources of those agencies to develop a groundwater management plan that has the widest possible support within the basin; and

WHEREAS, the various agencies, along with the District, have agreed to form an association, which will provide the means by which the parties can work together to study the groundwater basin and its hydrology, and draft a groundwater management plan for the comprehensive management of the groundwater basin for the benefit of all those who are served by the resource and those who are charged with the responsibility of managing the resource.

NOW, THEREFORE, BE IT RESOLVED by the Board of Directors of the Modesto Irrigation District as follows:

1. The Memorandum of Understanding Relating to the Formation and Operation of the Stanislaus and Tuolumne Rivers' Groundwater Basin Association is hereby approved, and the General Manager is authorized and directed to execute the Memorandum on behalf of the District.

2. The General Manager is authorized and directed to take all necessary actions to carry out the purposes and intent of this resolution.

Moved by Director Warda, seconded by Director Kidd, that the foregoing resolution be adopted.

The following vote was had:
Ayes: Directors Billington, Hensley, Kidd, Van Groningen, and Warda
Noes: Directors None
Absent: Directors None
The President declared the resolution adopted.

o0o

I, Vickie Ehrler, Secretary of the Board of Directors of the MODESTO IRRIGATION DISTRICT, do hereby CERTIFY that the foregoing is a full, true and correct copy of a resolution duly adopted at a regular meeting of said Board of Directors held on the 11th day of September 2001.

Secretary of the Board of Directors
of the Modesto Irrigation District

Appendix B

Memorandum Between Association and Department of Water Resources

STATE OF CALIFORNIA – THE RESOURCES AGENCY

ARNOLD SCHWARZENEGGER, Governor

DEPARTMENT OF WATER RESOURCES
1416 NINTH STREET, P.O. BOX 942836
SACRAMENTO, CA 942360001
(916) 653-5791

COPY

November 2, 2004

Mr. Walter Ward
Assistant General Manager
Water Resources
Modesto Irrigation District
Post Office Box 4060
Modesto, California 95352

Memorandum of Understanding for the Stanislaus and Tuolumne Rivers Groundwater Basin Association

Dear Mr. Ward:

I am returning to you one signed original of the Memorandum of Understanding (MOU) between the Stanislaus and Tuolumne Rivers Groundwater Basin Association (Association) and the California Department of Water Resources (DWR). Member agencies of the Association include the Modesto and Oakdale Irrigation Districts, Cities of Modesto, Oakdale, and Riverbank, and Stanislaus County. DWR is pleased to have reached this agreement and looks forward to working cooperatively to assist in the evaluation and implementation of conjunctive use programs and projects.

If you have any questions regarding the MOU or DWR's involvement, please contact me at (916) 651-9291 or Eric Hong at (916) 651-9232.

Sincerely,

John Woodling, Chief
Conjunctive Water Management Branch
Division of Planning and Local Assistance

Enclosure

cc: Ms. Paula Landis, Chief
San Joaquin District
Division of Planning and Local Assistance
3374 East Shields Avenue
Fresno, California 93726-6990

11-5-04 rcb
original to secretary's office
Scanned - P Water Resources DWR - MOU 10/7/04

MEMORANDUM OF UNDERSTANDING
TO WORK COOPERATIVELY TO IMPROVE SURFACE AND GROUNDWATER MANAGEMENT AND TO PROMOTE CONJUNCTIVE USE PROJECTS AND PROGRAMS IN THE MODESTO GROUNDWATER SUBBASIN

This Memorandum of Understanding (MOU) is entered into this 7th day of October, 2004, by and between the California Department of Water Resources (DWR) and the Stanislaus and Tuolumne Rivers Groundwater Basin Association (Association), also referred to collectively as "the Parties." Member agencies of the Association include the Modesto and Oakdale Irrigation Districts, Cities of Modesto, Oakdale, and Riverbank, and Stanislaus County.

RECITALS

A. Groundwater in the Modesto Subbasin has been and will remain a significant source of the water for the people, environment, and agribusiness of Stanislaus County and provides an invaluable contribution to the local economy and public wellbeing.

B. The Association and member agencies strive to increase the availability and reliability of local ground and surface water resources in the basin.

C. The Association and its member agencies have an interest in the management of its groundwater resources.

D. The Parties recognize that there is potential for improvement in groundwater management and for conjunctive management of ground and surface water resources, and are willing to explore the possibility of increasing the availability of dry-year supplies through regional conjunctive use efforts while protecting groundwater resources.

E. DWR seeks to facilitate and support local groundwater management efforts, particularly those that could increase dry-year water supplies, within the safe-yield and without the overdraft of groundwater basins.

F. Cooperation, open communication, and consensus building among the Modesto Subbasin stakeholders are needed to implement proposed water management actions.

ARTICLES

NOW, THEREFORE, the Parties recognize that this MOU is a statement of principles and not a binding agreement, and the Parties agree to the following principles:

1. The Parties will work cooperatively to formulate measures to manage and protect the groundwater resources of the Modesto Subbasin, to develop a conjunctive water management program, and to identify potentially feasible initiatives, programs, or projects that enhance the dependable yield of the Subbasin. In developing "Basin Management Objectives" (BMO), an initial review of possible programs or projects has been undertaken by the Association and is described in the "Draft Implementation Plan." These management objectives have been developed for an Integrated Regional Groundwater Management Plan for the Modesto Subbasin. The Parties will meet to review and determine if specific measures identified in developing the BMOs are technically, environmentally, economically, institutionally, socially, and legally feasible. This initial review shall be commonly referred to as "Phase I." An outline of the Phase I work, attached to this MOU as Appendix A, covers specific tasks that are to be performed as part of this initial review.

2. When the Parties have reached agreement on completion of Phase I, as described in Article 1 of this MOU, other activities to be completed cooperatively may include development and implementation of the programs and projects described in the Draft Implementation Plan.

3. To accomplish specific tasks outlined in Article 2, the Parties will enter into agreements that define the scope of work, cost sharing, schedule, and other details. Such specific agreements will be supplementary to, and consistent with, the objectives of this MOU.

4. The Parties will share all the technical data, analyses, conclusions, and findings developed through the course of implementing this MOU.

IN WITNESS WHEREOF, the Parties hereto have executed this MOU as of the day and year first written above.

STANISLAUS AND TUOLOMNE RIVERS GROUNDWATER BASIN ASSOCIATION

By: Walter B. Ward

Title: Association Chairman

CALIFORNIA DEPARTMENT OF WATER RESOURCES

By: Marilee Lomi

Title: Chief, Division of Planning and Local Assistance, DWR

Appendix C

Data Collection Protocols

STANISLAUS & TUOLUMNE RIVERS GROUNDWATER BASIN ASSOCIATION

GROUNDWATER MONITORING PROTOCOL FOR MEASURING STATIC GROUNDWATER LEVELS

GENERAL

The Stanislaus & Tuolumne Rivers Groundwater Basin Association is comprised of the County of Stanislaus, the Cities of Oakdale, Riverbank, and Modesto, and the Oakdale and Modesto Irrigation Districts. The Association's jurisdiction is defined by the *Memorandum of Understanding Relating to the Formation and Operation of the Stanislaus and Tuolumne Rivers Groundwater Basin Association* (1994, 2002). As recommended by the Groundwater Association Board (See Board Minutes, January 15, 1998), monitoring of spring and fall water levels is to be coordinated among association member agencies and other participating entities within the groundwater basin to (1) facilitate regional mapping of groundwater levels, (2) ensure consistency of data collection, and (3) to channel ongoing work in a cost effective manner.

Monitoring spring and fall static water level measurements represents the groundwater association's first step toward implementation of local groundwater management plans that were developed under Assembly Bill 3030 (1992). The purpose of this work is to (1) preserve and protect the quantity and quality of groundwater for local agencies' constituents and (2) to ensure local control of groundwater as a valuable resource by showing that prudent groundwater management practices are being implemented within the local groundwater basin.

The development of a groundwater monitoring protocol will continue to be an evolving program as information regarding wells within the basin is developed. Well information, including total depths and screened intervals, location, access, and measuring point elevation, will provide a basis for the development of criteria to select wells best suited for monitoring static water levels. Ultimately, wells selected for the monitoring program must also be accurately surveyed according to a common coordinate system to establish the horizontal and vertical well location.

This document as well as its attachments represent procedures for acquiring, recording, and exchanging groundwater level data. To the extent practical, groundwater association members, as well as other participating entities, will strive to collect and record spring and fall groundwater level data consistent with the following protocol.

MAPPING

The purpose of collecting spring and fall static water level measurements is to develop water level contour maps that display the relationship between hydrologic resources and the cultural resources of the groundwater basin. This mapping tool can then be used by local agencies to better understand the spatial relationships between groundwater recharge and discharge areas, flow

directions, pumping patterns, and land use impacts on groundwater quantity and quality. When water level maps are referenced in time, water level measurements can reveal changes in groundwater flow regimes brought about by natural or human influences.

Regional mapping of groundwater levels requires the monitoring of uniformly distributed monitoring wells that capture the vertical extent of the aquifer of interest. This objective is not only technically difficult to accomplish, but also is not economically feasible. A proposed alternative is to utilize production wells currently being monitored by various agencies as representative of average head conditions for that well site. Currently, monitoring of groundwater levels are performed by many agencies and private entities within the basin. Table 1 below shows the agencies and number of wells currently being monitored.

Table 1: Summary of Wells Currently Monitored by Local Agencies for Static Groundwater Levels

	City of Modesto	*City of Riverbank*	*City of Oakdale*	*Oakdale Irrigation District*	*Modesto Irrigation District*	*Stanislaus County*	*Total*
Number of Agency Wells in Basin:							
Irrigation	0	0	0	14	48	0	62
Drainage	0	0	0	0	53	0	53
Public Water Supply	141	7	8	5	0	0	161
							276

As the groundwater monitoring program is further developed, well sites that are better suited to monitoring will be identified and located. Production and monitoring wells not currently in the program will be evaluated based on the monitoring program's needs, with the ultimate objective of developing a uniform grid of well monitoring sites across the basin. Mapping of groundwater levels will be coordinated with the ongoing local geographic information system.

GROUNDWATER MONITORING

The acquisition and interpretation of water level data are essential parts of a groundwater monitoring program. Prior to developing these data, a monitoring program must include standard procedures for the acquisition of water level data. This will ensure that groundwater level data is not only consistent between sampling events, but that the data being collected is comparable between different field personnel. Without this, water level data collected during varying months and methods may not be comparable and, if used in a water-level flow analysis, could lead to erroneous conclusions.

The following text outlines a proposed water level measurement protocol that will ensure data consistency between the various agencies' field operations. It is understood that participating Association's member agencies, as well as other entities, currently have groundwater monitoring programs underway. In recognition of these ongoing programs, the intent of this protocol is not to create additional field work, but to coordinate ongoing monitoring programs to ensure that field data collection efforts share common monitoring program techniques that will best represent depth

to water measured from the ground surface. Once this has been accomplished, depth to groundwater below ground surface can be converted to an elevation referenced to feet above or below mean sea level.

Please see Attachments - C and - D, and - E (Figure 1) for the definition of terms, documentation of well-site field notes, and the diagram of a wellhead as they will be referred to through the remainder of this document.

General Preparation

Prior to the measurement of static water levels, an inspection of the required equipment is necessary. Electric sounders should be checked for proper battery operation and all cables, regardless of type, should be calibrated quarterly using a graduated steel tape. Transducers also periodically require calibration.

Most importantly, all wells, especially public or community supply wells, require standard procedures for field equipment decontamination to guard against the transfer of bacteria, oil lubricants and its by-products, and possible other trace organics, etc. to other wells. While no national standard exists for decontaminating well sampling field equipment, a reasonable guideline to follow would be to immerse or rinse the equipment thoroughly in a mixture of detergent (Alconox) and water or liquid chlorine bleach and water. A final rinse of the equipment with potable water is always required.

Locating a Well

Well location is important to mapping static water levels. At the present time, over six hundred wells within the groundwater basin have been located for mapping purposes using a global positioning satellite (GPS) system. Because of the success of GPS in measuring well locations, future mapping of wells will likely be located using GPS. Developing a vertical benchmark for the well site measuring point requires additional work in terms of a survey grade GPS system or the use of a traditional survey team to develop a vertical benchmark. In terms of well location accuracy, the following well location criteria should be used:

(1) horizontal (+/-) 3 feet;
(2) vertical (+/-) 0.1 foot.

Well location coordinates should be mapped using a recognized coordinate system that allows conversion to other coordinate systems. The current coordinate system being used that facilitates sharing of data with the regional GIS system is:

(1) System:	United States State Plane 1983
(2) Zone:	California Zone 3 0403
(3) Datum:	North American Datum - 83 (NAD83 - Western U.S.)
(4) Coordinate Units:	Feet

(5) Altitude Reference: Mean Sea Level

In addition to developing coordinates for the well location site, each well site should have documentation or field notes that physically describe the well site as well as other detailed well information. Please refer to Attachment - D for a breakdown of documentation to be included in the well site's field notes.

Establishing a Permanent Measuring Point

A permanent measuring point (MP) is important to ensure consistency and comparability of measured static water level data over time. In addition, the height between the MP and the land surface datum should be accounted for prior to reporting depth to water below ground surface to the regional groundwater mapping entity. Attachment - C provides a detailed definition for establishing a MP at a wellhead site.

Static Water Level Measurement Considerations

Static water level is the level at which water stands in a well or unconfined aquifer when no water is being removed from the aquifer either by pumping or free flow. It is generally expressed as the distance from the ground surface (or from a measuring point near the ground surface) to the water level in a well. For example, when the static water level in a well is 25 ft, it means that water stands 25 ft below the ground surface or measuring point (datum reference dependent) when there is no pumping. For the Association's groundwater monitoring work, each participating agency is responsible for (1) developing a measuring point, (2) the distance between the MP and the land surface, if not the MP, and (3) reporting the water level measurement as the SWL.

For regional static water level monitoring there are a number of methods and instruments used to collect and record changes in groundwater levels. Several measurement techniques currently utilized by association members include electric sounding, air-line submergence method, and pressure transducers. Each technique requires different information necessary to collect water level data. Details regarding measurement techniques should be well understood by field personnel prior to use of the measurement equipment. Common to each technique, however, are several factors that must be observed in order to maximize the accuracy of the water level data.

These factors include:

- Ensure that the well being monitored for water level has not been in use for at least 24 hours prior to measuring event.
- Annotate nearby pumping wells and approximate distance.
- Ensure that the water level measurement is recorded to the tenth of a foot, and is repeatable.

- Account for any factors that may lead to measurement error, such as access port geometry, measuring point above or below ground surface, thick oil layers in oil lubricated wells, etc.

Water Level Measurement Precision and Intervals

Water level measurement accuracies vary between the different measurement methods. Despite the source of error associated with the different measurement devices, the objective is to measure water levels to the tenth of a foot. This level of accuracy will facilitate water level hydrograph analysis should specific needs arise.

Monitoring seasonal fluctuations of water levels in the local groundwater basin require that static water levels should be measured in early spring (late February to mid-March) and again in late fall (late October to mid-November), with emphasis in the spring measurement.

Reporting of Data

Water level data should be reported as depth to water below ground surface in feet, accurate to a one-tenth of a foot. Attachments - A, and - B are sample spreadsheets that comprise the necessary information required to analyze and interpret water level data collected by field staff.

The primary use of the association's groundwater monitoring program is to monitor water level changes over time. The usual procedure is to plot the location of the wells on a base map, convert the depth-to-water measurements to elevations, plot the water level elevations on the base map, and then construct a groundwater elevation contour map. The direction of groundwater flow can be estimated by drawing groundwater flow lines perpendicular to the groundwater elevation contours.

This relatively simple approach to estimating groundwater flow directions is suitable where wells are screened in the same zone and the flow of groundwater is predominantly horizontal. In terms of the associations groundwater monitoring program, these assumptions are generally consistent with regional flow within the basin. As detailed well construction information and geologic strata in which well screens are situated become available, these assumptions will be revised as needed.

Water Level Interpretation

Interpretation of water level data requires that information regarding the well construction specifications be made available for each well in the monitoring program. This information should be contained in the field notes for each well-site (Attachment - D), which should include:

- Production or Monitoring Well Installations

    1. Geologic sequence.

    2. Well construction features, especially total well depth, screen and gravel pack length, and geologic strata in which the screen is situated.

    3. Depth and elevation of the top and bottom of the screen, or multiple screens, and gravel pack, if used.

    4. Measuring point location and elevation (x, y, z).

- Water Level Data

    1. Date and time of measurement.

    2. Method used to obtain the measurement.

    3. Other conditions in the area which might be affecting the water level data such as river stage, well pumping, storm events, irrigation, etc.

Performing an analysis of the association's regional monitoring program entails the evaluation of a large data set. To facilitate this work, computer statistical analysis and contouring will be used to map water-level depths and elevations. Critical review of this approach will be done manually and will require the above individual well construction information.

Attachments:

A - Sample Well Construction Information Data Table
B - Sample Water-Level Data Table
C - Groundwater Monitoring Protocol Definitions
D - Well Facility Field Notes and Documentation
E - Figure of Well Facility

Appendix D

Groundwater Monitoring Plan

Groundwater Monitoring Plan

Submitted to:
Tuolumne and Stanislaus River
Groundwater Basin Association

Date: October 4, 2004
Project No: 040190

Table of Contents

1 Introduction 1

1.1 Background 1
1.2 Goals and Objectives 2

2 Monitoring Network 4

2.1 Rationale 4
2.1.1 Surface Water 4
2.1.2 Groundwater 4
2.2 Monitoring Network 7

3 Monitoring and Reporting Frequency 10

3.1 Monthly Groundwater Production Monitoring 10
3.2 Semiannual Groundwater Level Monitoring 10
3.3 Annual Water Quality Monitoring 10
3.4 Annual Reporting 10

4 Project Organization and Responsibility 12

5 Monthly Monitoring 14

5.1 Preparation for Field Work 14
5.2 Meter Reading 14
5.3 PG&E Records 14
5.4 Quality Control 14

6 Semiannual Groundwater Level Monitoring 15

6.1 Preparation for Field Work 15
6.2 Calibration of Field Equipment 15
6.2.1 Electrical Conductivity Meter 16
6.2.2 Groundwater Level Sounder 16
6.3 Monitoring Procedures 16
6.3.1 Groundwater Level Measurements 16
6.3.2 Electrical Conductivity Measurement 17
6.4 Quality Control 17
6.5 Obtain DWR and USGS Records 17

7 Annual Groundwater Quality Monitoring 19

7.1 Preparation for Field Work 19
7.2 Sample Containers 20
7.3 Well Purging and Discharge 20
7.4 Sample Identification and Labeling 20

7.5 Sample Collection 20
7.6 Sample Preservation and Storage 21
7.7 Record Keeping and Chain of Custody 21
7.8 Quality Control Samples 21
7.9 Quality Control 21

8 Laboratory Procedures and Reporting of Results 22
8.1 Record Keeping 22
8.2 Quality Assurance 22
8.3 Analytical Methods 23
8.4 Laboratory Reporting of Results 23

9 Recommendations 24

References

Tables

1 Current Level of Monitoring Efforts
2 High Groundwater Monitoring Wells
3 Shallow Aquifer Monitoring Wells
4 Deep Aquifer Monitoring Wells
5 Forebay Aquifer Monitoring Wells
6 Mehrten Confined Aquifer Monitoring Wells
7 Modesto Irrigation District Top Producing Wells
8 Aquifer-River Connectedness Monitoring Wells
9 Surface Water Gaging Stations
10 Groundwater Monitoring Summary
11 Typical Production Meter Read Form
12 Semiannual Groundwater Level and Sampling Form
13 Purge Volume Estimation Sheet
14 Analytical Parameters, Test Methods, Holding Times, Sample Containers, Preservation and Approximate Detection Limits for Groundwater Samples
15 Example Chain of Custody Form

Figures

1 General Location of Aquifers
2 Geologic Section A-A'
3 Geologic Section B-B'
4 Typical Well Sounding Location Detail
5 Groundwater Level and Quality Monitoring Network
6 Groundwater Production Monitoring Network

Appendices

Wells in the Modesto Subbasin Providing Water Quality Data

J:\040190 Stanislaus & Tuolumne Rivers Gdwtr\GW Monitoring Plan\GW Monitoring Plan.doc

1 Introduction

This Groundwater Monitoring Plan (GMP), prepared for the Stanislaus and Tuolumne Rivers Groundwater Basin Association (Association), provides guidance for the selection of wells for the monitoring network as well as groundwater monitoring and sampling procedures to reduce uncertainties in the monitoring data. This GMP is a starting point for the Association to modify as additional information becomes available to supplement the existing network. The Association's groundwater monitoring network and data acquisition will provide basic information needed to manage the groundwater resources of the Modesto groundwater subbasin.

1.1 Background

Groundwater is present in the consolidated and unconsolidated sediments. There are two principal aquifers, separated by the Corcoran clay, in the western portions of the study area and one aquifer east of the Corcoran clay. Figures 1 through 3 show the location of the aquifer in both plan and profile. The aquifers are defined as:

- The shallow aquifer, generally west of Highway 99, above the Corcoran clay. High groundwater levels sometimes cause problems for plants and may be related to a shallow aquitard (clay or hardpan).
- The deep aquifer, also located west of Highway 99, below the Corcoran clay and below the shallow aquifer.
- The forebay aquifers, east of the Corcoran clay. They merge with the shallow and confined aquifers west of Highway 99. Most of the Oakdale Irrigation District overlies the forebay aquifers.
- The confined Mehrten aquifers, which underlie all of these aquifers, are exposed on the ground surface in the eastern portion of the area and dip westward beneath the subbasin.

Each of the aquifers has water quality problems, as summarized below:

- Shallow aquifer – localized total dissolved solids (TDS), nitrate, dibromochloropropane (DBCP) and volatile organic compounds (VOCs) (western part near Modesto subasin)
- Deep aquifer – localized TDS and VOCs (City of Modesto area)

- Forebay aquifers – localized TDS, DBCP, and uranium (western part near the City of Modesto and Empire)
- Mehrten confined aquifer - potentially sodium, chloride, and TDS.

For the most part, these problems are localized and affect only portions of the subbasin. In general, the water north of the Modesto subbasin, around the City of Oakdale and Riverbank, is of good quality. The City of Modesto has abandoned some of its wells because of water quality issues. High groundwater levels with high levels of TDS are present in the western portion of the subbasin.

Iron and manganese are present in all four aquifers but are typically related to reduced, oxidized soils. At this time, arsenic does not appear to be a water quality issue, based on testing of the municipal supply wells.

Groundwater levels in the Modesto subbasin have been measured in about 230 wells by the Department of Water Resources (DWR) and its cooperatives. The wells used for monitoring may be in different aquifers and at times have long screen intervals that make an interpretation of groundwater flow directions and water quality difficult. Appendix A contains a list of these wells. Some member agencies may be reporting data to DWR and are included in this list.

The U.S. Geological Survey (USGS) has monitored 17 wells in the area for the National Water Quality Assessment Program. It has also constructed or plans to construct additional monitoring wells in the City of Modesto to define hydraulic characteristics, water levels, and water quality in the shallow and confined aquifers. Appendix A contains a list of these wells.

The University of California-Davis (UC-Davis) with grant funding has constructed several monitoring wells to assess nitrates and nutrient management near dairies.

The Association's members, to some varying extents, monitor groundwater production, levels, and quality. Table 1 summarizes the current level of monitoring through the member agencies.

Other groundwater monitoring conducted in the basin assesses releases of hazardous materials to the environment. These wells are typically near metropolitan areas and the resulting data are provided to the Regional Water Quality Control Board (RWQCB). These wells are extremely useful because they typically monitor the first water encountered, which can be correlated with surface water gaging stations to evaluate the aquifer connectedness.

1.2 Goals and Objectives

The goals of this GMP are to develop a plan to track and assess the potential effects from the implementation of basin management objectives (BMOs) and to manage the groundwater in

the basin to protect the quantity and quality of the groundwater within the subbasin. The GMP goals are to:

- Track groundwater levels to identify natural recharge areas, flow directions that govern the movement of contaminants, and potential areas where subsidence may occur.
- Develop a better understanding of the spatial variability (both horizontal and vertical) of groundwater quality to control degradation of water quality.
- Track groundwater production to develop a water balance.
- Monitor changes in water quality over time that indicate impacts to the aquifers.
- Obtain consistent and high quality data.
- Disseminate the information to the Association members.

The objectives of this GMP are to develop a groundwater monitoring network capable of collecting hydraulic measurements that will be used to characterize groundwater occurrence, flow direction, water quality, and recharge areas. Data on groundwater levels, flow directions, and water quality must be gathered from each of the identified aquifers.

This GMP describes a preliminary groundwater monitoring network and an approach to assess, justify, and select additional monitoring wells to provide information to address specific issues and BMOs within the subbasin.

This plan also designates a responsible party/agency (an Association member) that will coordinate activities and archive, compile, disseminate, and analyze the data. Personnel from member agencies will implement the plan.

2 Monitoring Network

The following sections describe the rationale for the selection of monitoring points to be included in the monitoring network. Because surface water and groundwater may interact, the monitoring network consists of both groundwater and surface water monitoring through activities of the Association members and other governmental agencies.

2.1 Rationale

The Association's goals are to manage groundwater resources for the long-term sustainability of the resource. Key issues in the subbasin are:

- High groundwater in western portion of the subbasin
- Groundwater quality
- Groundwater recharge and discharge areas
- Changes in groundwater levels that affect groundwater in storage

The following sections describe the rationale for selecting the monitoring network well sites.

2.1.1 Surface Water

The aquifers beneath the subbasin may seasonally discharge to or receive recharge from the Toulumne, Stanislaus and San Joaquin Rivers. Data regarding the stage height of water in these rivers should be obtained from gaging stations and compared to groundwater levels to assess the recharge-discharge relationships. Water quality data should also be obtained to assess the quality of water that may be entering the aquifers in recharge areas. Sources of data include the USGS and DWR websites. The gaging data may also be used to assess the amount of water gained or lost to aquifers by discharge to or recharge by the rivers.

2.1.2 Groundwater

Groundwater monitoring wells should be selected to provide regional coverage that can be economically accomplished yet provide high quality, reliable data.

These selections will be based on the purpose for which the well will be used and the issues to be defined. The location and spacing of the wells varies, dependent upon the issue.

- Groundwater levels and flow directions were selected when they have a rough triangular spacing. The triangular spacing allows the projection of a planar surface,

thus allowing the development of groundwater contours and their orientation. The contours show recharge areas, discharge areas, and the groundwater flow path.

- Groundwater quality monitoring well locations were generally selected with one up-gradient well (to assess the quality of water coming into the area) and a minimum of three down-gradient wells (to detect the horizontal extent of the contaminant). Additional wells are needed to assess the vertical extent (when contaminants may move into different aquifers).

- Groundwater discharge or recharge areas were selected, again with a rough triangular spacing, to project the plane into the discharge area. The elevation of the water surface elevation in the discharge or recharge area also provides confirming evidence of the connection of the groundwater surface to the surface water. At least some of these monitoring wells need to be located near the gaging station.

- Wells selected to detect groundwater movement between aquifers are typically closely spaced, but screened at different depths.

- Wells selected to detect changes in groundwater storage may be screened in multiple aquifers and scattered throughout the basin. These wells are used to account for the major portion of groundwater that is extracted from within the basin.

- Wells selected to detect groundwater inflow from outside of the basin generally consist of multiple clusters of three wells with a triangular spacing in the adjacent subbasins, just outside the Modesto groundwater subbasin boundaries.

After defining the purpose for monitoring and general areas, a detailed evaluation of potential wells needs to be conducted. Wells selected for monitoring should have:

- A well log that describes the well construction details and a description of the sediments encountered

- A detailed description of the well's location

- A relatively short screen interval in only one aquifer

- A sanitary seal to prevent surface water from entering the well

Although the most desirable wells to be included in the monitoring network are wells with short screen intervals completed within a specified aquifer, some wells with longer screen intervals may need to be initially included in the network when there are no wells with short screen intervals to complete the regional interpretation and tracking of groundwater level and water quality. Wells with long screen intervals may also be designated for monitoring because their long historic records provide valuable trending information about the general status of the aquifers. Data obtained from the longer screen wells usually represent an

aggregate of water quality from two or more aquifers. These wells with longer screen intervals should be replaced with wells with shorter screen intervals if warranted, based on a review and interpretation of the monitoring data.

For purposes of this monitoring plan, the following definitions of the well to be used by aquifers are:

- High groundwater monitoring wells – wells that are screened to or near the ground surface and overlie the Corcoran clay.
- Shallow aquifer monitoring wells – wells that are screened between 30 to 150 feet below ground surface (bgs) in the area where the Corcoran clay is present.
- Deep aquifer monitoring wells – wells that are screened 250 feet or more bgs in the area where the Corcoran clay is present.
- Forebay aquifer monitoring wells – wells that may be screened as shallow as 30 feet but toward the west, increase in depth to as deep as 400 feet bgs.
- Confined Mehrten aquifer monitoring wells- wells that may be screened from as shallow as 30 feet up to 800 feet bgs and will generally increase in depth toward the west.

Upon selection of a well to be potentially included in the monitoring network, a site visit will be necessary to assess the field conditions. The conditions necessary for a well to be used in the network include:

- A well owner who will allow access for monitoring
- All-weather access
- Access through the pump or well casing for water level sounders
- An assessment to determine if lubrication oil from a turbine pump has accumulated in the well or if there are obstructions in the well that would prevent obtaining repeat and reliable measurements
- A pump and electrical service, if the well is to be used for water quality monitoring

During the site visit, the investigator should sketch the location and access to the well and the location for measuring water levels and record any special contact information to perform the monitoring. This will ensure consistent monitoring even though monitoring staff may change. Figure 3 shows a typical well sounding location detail.

Not all wells have to be monitored by the Association members to be included in the network. Potential sources of other monitoring data may include:

- DWR monitoring records for about 230 wells (including cooperators) in the Modesto subbasin and an undetermined number in adjacent subbasins. Appendix A lists the wells reported by DWR. Some may be monitored by member agencies.
- The USGS monitoring wells near the City of Modesto.
- The 15 wells included in the USGS National Water Quality Assessment Program.
- UC-Davis and its farm advisory special studies for nitrate and nutrient management near dairies.
- Reports submitted to the Regional Water Quality Control Board for releases of hazardous materials to the environment that are affecting groundwater and shallow groundwater levels.

These sources have not been assessed for inclusion of additional monitoring wells into this GMP. The Association should assess these potential sources and select wells that would improve this GMP by filling in gaps in the spacing of the network or wells that can provide specific localized information.

2.2 Monitoring Network

The proposed groundwater monitoring network consists of gaging stations and wells owned by Association members, private parties, and other governmental bodies. Combined, the network will provide the necessary data to assess groundwater conditions beneath the subbasin. Monitoring will not be performed by any one group, but the data will collected and analyzed by the Association. The monitoring network described below should not be considered as a final network but will provide initial representation of the groundwater conditions within the subbasin. The wells included in this preliminary network were those wells owned or monitored by Association members. An evaluation of wells monitored by other parties has not been included. Additional wells, selected using the rationale presented above, should be added to monitor specific issues.

Table 2 identifies groundwater wells that were selected to assess high groundwater conditions (possibly water that is perched on a shallow clay layer) in the western portion of the subbasin. These wells have screen intervals that extend to or near the ground surface. The table also provides well construction details. Figure 4 shows their locations.

Table 3 identifies the wells that were selected to assess groundwater levels and water quality in the shallow aquifer, above the Corcoran clay. Data from these wells will also assist in the

evaluation of the groundwater discharges to the rivers that must be maintained to prevent salt accumulations in the basin. Figure 4 shows their locations.

Table 4 identifies the wells that were selected to assess groundwater levels and water quality in the deep aquifer, below the Corcoran clay. The list is short because all of the wells are screened in both the shallow and confined aquifers except for one well south of the Toulumne River (City of Modesto well #19). Replacement wells will need to be found for the long screened wells. Figure 4 shows their locations. These wells should be reevaluated upon the USGS's release of a report later this year that provides detailed stratigraphy in the subbasin. We understand the USGS plans to construct a new set of wells to monitor this aquifer and to assess vertical gradients. These wells should be added to this list.

Table 5 identifies those wells that were selected to assess groundwater levels and water quality in the forebay aquifers. Figure 4 shows their locations. Most of these wells have relatively long screen intervals. Some of the wells on this list have long screen intervals that cross both the forebay and confined Mehrten aquifers but are being used to provide regional coverage. As soon as practical, these wells should be replaced with wells that monitor only the forebay.

Table 6 identifies those wells in the eastern portion of the subbasin that monitor only the confined Mehrten aquifers. Figure 4 shows their locations. Groundwater in these wells may or may not be connected to the aquifers in the forebay. Some of the wells on this list have long screen intervals that cross both the forebay and confined Mehrten aquifers but are being used to provide regional coverage. As soon as practical, these wells should be replaced with wells that monitor only the confined aquifer.

Table 7 identifies the top ten producing wells in the Modesto Irrigation District service area that could affect the quality of water supplied to agricultural users and may cause problems under the Agriculture Waiver or various Total Maximum Daily Loads (TMDLs). Table 8 could potentially be used to identify those wells that could be used to better understand the aquifer-to-river interconnectedness. Wells for this task probably will be obtained from the RWQCB.

Additional tables may be created and attached to provide information regarding specific BMOs such as the extent of arsenic, nitrate, uranium, and DBCP.

In summary, the groundwater monitoring network will consist of 93 wells (a combination of Association and DWR monitoring wells) designated for groundwater level and quality monitoring. The number of wells by aquifer is summarized below:

- High groundwater aquifer (perched aquifer): 21 monitoring wells
- Shallow aquifer: 16 monitoring wells

- Deep aquifer: 6 monitoring wells
- Forebay aquifers: 39 monitoring wells

Monitoring wells specifically designated to track specific BMOs may add additional wells to this total.

All municipal and irrigation wells owned by the Association members are equipped with totalizing flowmeters or power meters and will be included in the monitoring network to measure groundwater production.

Six surface water gaging stations along the Toulumne and Stanislaus Rivers continuously monitor the height of water in the rivers. The spacing of the gaging stations on the San Joaquin River was not favorable to assist in evaluating discharge-recharge relationships. Table 9 lists the gaging stations to be included in the monitoring network. The URL for the USGS website is also shown on the table. Figure 4 shows the gaging station locations.

3 Monitoring and Reporting Frequency

The following sections describe the frequency for monitoring and reporting. Subsequent sections provide a description of the work to be accomplished during each of the designated monitoring periods. Table 10 lists the wells and monitoring types and frequencies.

3.1 Monthly Groundwater Production Monitoring

Groundwater production from all Association member wells will be measured monthly. The measurements should be made within with a two-week period, if possible.

3.2 Semiannual Groundwater Level Monitoring

Groundwater levels and electrical conductivity from all designated monitoring wells listed in Table 10 shall be measured in the spring and fall (semiannually). Spring is generally considered to be February through April, prior to the start of irrigation. Fall is generally considered to be October through November, after the irrigation season but prior to the start of the winter rains. If possible, Association member agency personnel should make groundwater level measurements within a two-week period and, if possible, coordinate groundwater level monitoring with DWR and its semiannual measurements. Monthly groundwater level measurements should be obtained for those wells to assess aquifer-to-surface water interaction, listed in Table 8.

Groundwater levels from the DWR-monitored wells listed in Table 10 (name given as a state well numbers) and river height data from the surface water gaging stations listed in Table 9 should be downloaded from the Internet semiannually and archived.

3.3 Annual Water Quality Monitoring

In addition to the monthly and semiannual monitoring requirements, water quality samples from all monitoring wells listed in Table 10 shall be collected each fall. This work can be accomplished concurrently with the work described in Section 3.2.

3.4 Annual Reporting

The Association will prepare an annual groundwater monitoring report to summarize the findings of the groundwater level, production, quality, and gaging station data. The report should include an interpretation of the data (including but not limited to groundwater flow directions and the relationship of pumping to water quality and water levels), a discussion of any significant changes from the last reporting period, and groundwater management

recommendations. Recommendations to improve the monitoring network should also be included.

Groundwater contours for each aquifer will be developed, using only those wells that are screened only within the aquifer. The contours can then be used to evaluate recharge and discharge areas, changes in groundwater storage, and the need for additional monitoring wells.

4 Project Organization and Responsibility

The Association will plan, organize, collect, and archive the groundwater monitoring and sampling data. The following is a summary of the monitoring, sampling, and reporting responsibilities under this GMP.

The Association is responsible for:

- Coordinating monitoring and sampling schedules with member agencies so that production data and groundwater level measurements occur within the same two-week periods
- Archiving sampling and monitoring results
- Overseeing quality assurance/quality control (QA/QC) sampling and monitoring methods and procedures
- Revising this GMP annually, as necessary
- Preparing an annual summary report for distribution to the Association's members for discussion and development of management options

Each member agency will be responsible for:

- Scheduling equipment and supplies needed for sampling and monitoring
- Measuring and recording groundwater levels
- Measuring and recording electric conductivity measurements
- Arranging with the laboratory for sample bottles and analysis
- Collecting representative groundwater samples
- Overseeing quality assurance/quality control (QA/QC) sampling and monitoring methods and procedures

The designated contact for making decisions regarding the Association's GMP is _____, _____ _____ District (559-___-_____).

State-certified laboratories selected by the Association members will be responsible for sample analysis quality control and assurance. The laboratory(s) shall notify the members

immediately if samples have been compromised during shipment or handling or if the requested analyses cannot be conducted within the designated holding times.

5 Monthly Monitoring

Groundwater production from all Association wells will be measured monthly. The measurements shall be made within the same week.

5.1 Preparation for Field Work

Field personnel shall prepare for field work by obtaining the following equipment:

- A copy of Table 11 or other in-house forms to record the field measurements
- Figure 5 showing the location of the wells
- Clipboard and ballpoint pen

5.2 Meter Reading

Some of the irrigation and municipal wells have been equipped with totalizing flowmeters. The totalizer reading shall be recorded onto Table 11 to provide consistency in the measurements. Field measurements should include all numbers displayed on the meter, including zeros, which provides a level of quality control that the meter was read correctly. Any issues associated with the meter, including ability to read the meter or suggested maintenance, shall also be documented.

5.3 PG&E Records

Groundwater production at some wells is estimated from PG&E billings that list the kilowatt-hours used by the pumps on the wells. To accurately estimate the production totals, a pump efficiency test should be performed annually. The billings from PG&E need to be archived monthly.

5.4 Quality Control

After recording the totalizer readings, the member agencies shall enter the data into an electronic accounting form that will automatically subtract the measurement from the previous month's reading. The agency managers should review the production data for accuracy within five days of obtaining the initial measurement. Should a measurement appear suspicious, a confirmation reading shall be obtained. Agency personnel should be prepared to maintain the flowmeters.

6 Semiannual Groundwater Level Monitoring

Groundwater levels and electrical conductivity at all designated monitoring wells shall be measured semiannually, typically in the spring and fall. If possible, groundwater level measurements should be taken within a two-week period. If possible, groundwater level monitoring should be coordinated with DWR. Groundwater level data from the DWR and gaging station data from the USGS should be downloaded from the Internet.

6.1 Preparation for Field Work

Prior to collecting semiannual field measurements and before going to the field, the sampling personnel will assemble the following equipment and supplies:

- Copy of Table 12, Semiannual Groundwater Level and Sampling Form
- Copy of Table 13, Purge Volume Calculations
- Copies of Figure 3, Well Sounding Location Details, and Figure 4, Groundwater Level and Quality Monitoring Network
- Portable electrical conductivity meter, calibration standards, and manufacturer's calibration instructions
- Electrical water level sounder
- Watch or stopwatch
- Ballpoint pen and clipboard
- Paper towels
- Bleach
- Spray bottles
- Distilled water

6.2 Calibration of Field Equipment

Prior to collecting semiannual field measurements and before going to the field, sampling personnel shall clean, maintain, and test the water level sounder and calibrate the electrical conductivity meter, using appropriate standards.

6.2.1 Electrical Conductivity Meter

The frequency and nature of the electrical conductivity meter calibration shall be consistent with the manufacturer's recommendations. At a minimum, the meter shall be calibrated every day and when significant changes in climatic conditions occur (e.g., when the air temperature changes by more than 30°F). The meter type, its manufacturer, model and identification numbers, and calibration information shall be documented in the member agencies' files.

6.2.2 Groundwater Level Sounder

During use of a water level sounder, it is possible for the cable to stretch or to shorten because of tangles and obstructions in wells. Annually, the water level sounder shall be laid out and compared with a steel tape and the results documented. When calibration measurements show that the measurements are greater than 0.10 feet off in 100 feet, the cable shall be replaced.

6.3 Monitoring Procedures

The following procedures shall be used to measure the depth to water and electrical conductivity at each designated monitoring well. Water levels and electrical conductivity measurements will be collected semiannually to assess the groundwater flow direction and quality and to detect trends that can lead to improved management of the groundwater resources.

6.3.1 Groundwater Level Measurements

Each well has been assigned a unique identification number and a common name. The numbers and names for each well are listed in Table 10. Table 11, Semiannual Groundwater Level and Sampling Form, should be used to record all groundwater level measurements during the semiannual monitoring.

Prior to obtaining the water level measurement at each well and between each well site, the electric sounder cable shall be rinsed in a solution of sodium hypochlorite (liquid bleach) and distilled water. The solution shall consist of bleach and distilled water in a one-tablespoon-to-one-quart ratio (a concentration of about 200 parts per million chlorine is desirable). The sounder shall then be rinsed thoroughly three times with distilled water and allowed to air-dry. Thorough cleaning of equipment is necessary to avoid any possibility of cross-contamination and the transport of bacteria between wells.

Prior to purging and sampling, the depth to static groundwater level will be obtained at each well, using an electric water level sounder with a cable graduated in increments of 0.01 foot. To obtain a depth to water measurement, the electric sounder cable will be lowered slowly into the well through the access port until the sounder indicates submergence by either a beeping sound or light, depending on the type of signal installed for that particular model. At

this point, the sampling personnel will note the depth to water (to the nearest 0.01 foot) from the reference point. The depth shall be confirmed by lifting the sounder above the water surface by about 2 to 3 feet and then remeasuring the depth to water. If the depth remains constant, the depth-to-water shall be recorded on Table 12, along with the time and date of the measurement. If the depth changes, the sampling personnel shall indicate that on the form, the variable nature of the measurement, and its possible cause (e.g., bouncing, recovering water levels).

6.3.2 Electrical Conductivity Measurement

A representative sample of the groundwater must be obtained from the well. For purposes of this monitoring plan, a "representative" sample can be collected after at least three well volumes have been pumped from the well. The purge volume and time will be calculated using data from Table 10 and the calculation sheet shown on Table 12. These calculations can be saved and entered into another table that provides approximate purge times. This new spreadsheet will be a quick guide for sampling personnel to use in lieu of having to recalculate the purge time each time the well is sampled.

Several different types of electrical conductivity meters may be used by the sampling personnel. Some have a sample cup built into the unit, while others have a probe that requires that the sample be collected in a separate container.

Sampling personnel will collect water from as close to the well as possible and place the sample in the electrical conductivity meter sample cup or container. The sample shall be poured into the meter sample cup or container, then discharged and replaced three times before taking a measurement. The measurement shall be recorded on Table 12 and the sampling location noted (e.g., hose bib, end of discharge pipe, etc.).

After the measurement has been taken, the electrical conductivity meter sample cup or probe and container shall be rinsed at least three times with distilled water to maintain the equipment and to prevent false readings in subsequent wells.

6.4 Quality Control

After field personnel have completed their work, the member agencies shall enter the data into an electronic spreadsheet or database. The agencies' managers shall review the groundwater level and electrical conductivity measurements for accuracy within five days of obtaining the measurements. Should a measurement appear suspicious, a confirmation reading shall be obtained.

6.5 Obtain DWR and USGS Records

Semiannually, Association personnel shall obtain river gaging data for the six surface water gaging stations listed on Table 9 from the Internet addresses also listed in Table 9. A hard

copy and an electronic copy of the files shall be made. Should the data be absent, either the USGS or the DWR should be contacted to determine the reason and this conversation documented. The hard copy and/or documentation shall be placed in the project files.

After the wells monitored by DWR have been evaluated and if they are selected to be included in the monitoring network, the water level measurements for these wells can be obtained from an Internet search.

7 Annual Groundwater Quality Monitoring

In the fall of each year, water quality samples will be collected from all wells listed on Table 10 and sent to a laboratory for a more extensive analysis of the water chemistry. These analyses will provide an indication of the source of the water, changes over time, and potential mixing between aquifers. The results will be used to assess the effects of groundwater management actions. The work described below will be performed concurrently with work described in Section 6, Semiannual Groundwater Level Monitoring.

7.1 Preparation for Field Work

Prior to water quality sampling, designated sampling personnel shall notify the laboratory when sampling is scheduled, list the sample analysis parameters, and request sample bottles. A copy of Table 14 and Section 8.0 should be faxed to the laboratory to confirm the analytical methods and analytical quality control and assurance requirements. The laboratory should also be provided with the number of wells to be sampled as identified in Table 10 so that they can provide the appropriate number of sample bottles. The laboratory should be requested to deliver these sample containers in clean ice chests to the location chosen by the sampling personnel at least two days before the sampling begins. Upon receipt of the sample bottles, sampling personnel shall inventory the bottles to ensure that an adequate number and proper types of bottles have been provided.

The sampling personnel will assemble the following field forms, sampling equipment, and supplies:

- Copy of Table 10
- Copy of Table 13, Purge Volumes Calculations
- Copy of Table 15, Example Chain-of-Custody, or obtain one from the laboratory
- Sample bottles and ice chest from the laboratory
- Ballpoint pen and waterproof marking pen
- Safety glasses or goggles
- Latex or nitrile gloves
- Paper towels
- Ice

7.2 Sample Containers

Sample containers will be prepared by the laboratory with both preservative and container type in accordance with the required analysis as presented in Table 14. The containers shall be laboratory-cleaned prior to use, based on the analytes of interest, in accordance with the latest edition of the U.S. Environmental Protection Agency (USEPA), *Standard Methods for Examination of Water and Wastewater*. Sample containers must be stored in a manner that prevents the accumulation of dust or other contaminants. Prior to shipment to the sampling personnel, the laboratory will be responsible for verifying the cleanliness and integrity of the sample containers, pursuant to its sample container quality assurance and quality control procedures.

Each container will have a preprinted identification label that clearly shows the constituent(s) to be analyzed. A laboratory sample number will be assigned by the laboratory upon delivery of the sample(s) to the laboratory for proper identification and tracking.

7.3 Well Purging and Discharge

The water quality samples shall be collected after purging the well as described in Section 6.0. The well purge volumes shall be calculated as shown on Table 13 to exchange three well volumes before collecting the sample.

7.4 Sample Identification and Labeling

Each well has been assigned a unique identification number as listed in Table 10. This number shall be marked on each sample bottle.

All sample containers will be pre-labeled, to the extent possible, prior to each sampling event. Sample containers provided by laboratory will contain waterproof labels that will show the analyte and laboratory identification number. To the extent possible, the designated sampling personnel will inscribe on the label the sample identification, sampler's name or initials, and date, under dry conditions, using a waterproof marker pen during purging of each well. Immediately before collecting the water sample, sampling personnel will inscribe on the sample bottle label the time the sample was collected.

7.5 Sample Collection

Groundwater samples shall be collected from the well discharge water as close to the pump as possible. The sampling location should be the same as that used to collect the electrical conductivity measurements. Sampling personnel will be trained in the use of and exercise care during the handling of acid-preserved sample containers to minimize spillage, damage, and/or injury to the sampler(s) or the field equipment. In addition to latex or nitrile sampling gloves, the designated sampling personnel should wear safety glasses or goggles to minimize potential eye injury.

Designated sampling personnel will use "clean sampling techniques" to minimize potential contamination of water samples. Prior to the collection of samples, sampling personnel will rinse their hands and don sterilized latex or nitrile gloves. Sample containers and lids will not touch the ground, the sampling personnel's clothing, or any other potential sources of contamination. Sample container lids will not be removed from a particular container until that container is to be filled. Sample containers shall be rinsed three times with the sample prior to collection unless the container contains a preservative. The sample container shall be filled to the top of the rim to minimize air space between the liquid level and the lid. The lid shall be tightened securely to the container immediately after sample collection is completed.

7.6 Sample Preservation and Storage

Chemical preservatives and refrigeration shall be used to maintain sample integrity prior to analysis. Immediately after the sample has been collected, it shall be placed in a clean ice chest containing commercially prepared ice packs to maintain the temperature in the ice chest between 2°C and 6°C until the samples have been delivered to the laboratory. The ice packs will be double-bagged to prevent ice-melt water from touching the sample containers. Samples must be returned to the laboratory within 22 hours of sampling to meet analytical holding time requirements.

7.7 Record Keeping and Chain of Custody

Sampling personnel will maintain Table 13 field forms showing the dates and times of sample collections. A chain-of-custody form indicating the sampling site, sampler's name, date and time sampled, and any special observations shall be filled out by sampling personnel and placed in a sealable plastic bag with the sample(s) in the ice chest. The samples shall remain in the control and custody of a designated sampling team member at all times. A chain-of-custody form is presented in Table 15. When sampling personnel deliver the samples to the laboratory, the laboratory will sign for custody of the samples and provide a copy of the completed chain-of-custody form to the sampling personnel.

7.8 Quality Control Samples

This sampling plan does not require collection of any field quality control samples because the parameters being collected are stable and no volatile samples are being collected.

7.9 Quality Control

Within one day after field personnel have completed their work, the member agencies' managers shall review Tables 13 and 15 to assess if all of the necessary field information has been documented and that adequate purge times were allowed before collecting the samples. Upon receipt of the laboratory analyses, the managers shall compare the results to historic data and identify any anomalous results, and if present, notify the laboratory to confirm the measurement.

8 Laboratory Procedures and Reporting of Results

The laboratory will select the appropriate sampling containers for the chemical constituents to be analyzed (Table 14) and will meet its internal quality control requirements for duplicate and spike analyses.

8.1 Record Keeping

The laboratory will keep appropriate records to indicate the following for each sample:

- Date, location, and time of sampling
- Name(s) of individuals who performed the water sampling
- Date and time that samples were received by the laboratory
- Temperature of the ice chest interior upon receipt by the laboratory
- Date(s) that the analyses were made
- Analytical testing methods used and detection limits
- Analytical results

8.2 Quality Assurance

The laboratory will adhere to a quality assurance program that follows accepted USEPA protocols. It must maintain state certification for drinking water analyses and perform routine analyses including known, commercially available standards. These QA/QC procedures are to be described in the laboratory's Quality Assurance and Quality Control Manual. The laboratory shall submit to the agencies a report that describes the quality assurance results, spike recovery, any problems discovered or identified for the analytical period covered at the laboratory, and any subcontract laboratories used.

All analysts must be certified or approved to perform the required analyses or have the necessary training. A copy of the certification and training records shall be available to the agencies upon request.

8.3 Analytical Methods

The laboratory (including any subcontractor laboratory it may use) must use accepted laboratory analytical methods as specified in Table 14 where appropriate. USEPA limits on holding times must also be observed.

The laboratory (and any subcontractor laboratory it may use) must be certified by the State of California for the analytical methods used. Written test procedures including quality control practices shall be followed for each analytical method used to measure the parameters listed in Table 14.

Detection limits must be equal to or less than the detection limits for reporting purposes or State Action Levels for drinking water set forth by the California Department of Health Services. Table 14 lists the detection limits for each monitoring parameter.

8.4 Laboratory Reporting of Results

The laboratory will use a standard reporting form for all water sources listing date(s) of analysis, name(s) of person who analyzed the samples, analytical method(s) used, name of parameter analyzed, detection limit, units of measurement, and results of the analysis. Any analytical result of less than detectable shall be reported as less than the method detection limit. All inorganic constituents analyzed shall be designated as the ion or as calcium carbonate.

The laboratory shall submit to the agencies paper and electronic copies of laboratory results and written reports within 30 calendar days of receipt of the samples. Unusual spikes, questionable results, or detection of chemicals not on the list of required constituents will be promptly reported to the designated sampling personnel. The laboratory will maintain records that show the calibration of equipment used in the various analyses for at least three years from the date the analytical reports were submitted to the designated sampling personnel.

9 Recommendations

A shallow clay layer may be present in the western portion of the subbasin but it is not well defined. This clay layer may be causing high groundwater conditions and may also be limiting river and aquifer interaction. A profile of the sediments needs to be developed to define the geologic controlling conditions as they relate to the high groundwater. The database developed by the USGS should be queried to define the presence and extent of this clay layer.

The currently designated monitoring well network for groundwater level, quality, and production was limited to readily available data supplied to us by Modesto Irrigation District, Oakdale Irrigation District, the City of Oakdale, the City of Modesto, and the City of Riverbank. Further development of the monitoring network should be performed by reviewing well logs from DWR, USGS, and UC-Davis and applying the criteria given in Section 2.1.2 to select valid wells.

Special interest areas will need focused monitoring. Issues such as DBCP, nitrate, arsenic, and reservoir underflow may need specially designated monitoring wells. It is recommended that a special interest area be considered to evaluate groundwater recharge and discharge areas to the rivers. The current understanding is based on wells with screens starting about 100 feet bgs. Shallow monitoring wells with screens starting where water is first encountered may show different conditions. This detail of information is probably best evaluated through RWQCB records. If proven to be of value, these wells should be incorporated into the monitoring network and funding obtained for additional wells.

Elevations at each of the monitoring wells listed in Table 10 should be surveyed to the nearest 0.01 foot to allow conversions of depth to water to elevations. These elevations can be used to detect subtle differences in groundwater heads between aquifers. The heads will demonstrate whether the different aquifers are connected and will also allow an assessment of the vertical movement of groundwater in the area. Groundwater contours showing the horizontal flow direction of the groundwater can also be developed using the elevations.

Additional testing of the agricultural water supply wells and drainage wells should be performed to fully assess the distribution and concentrations of arsenic, uranium, and DBCP in the area.

Upon completion of the first water quality sampling, the data should be evaluated and the list of annual groundwater sampling wells revised.

The member agencies have limited data on historic groundwater level, water quality, production, and surface water level. With the implementation of this GMP, data will

accumulate quickly and must be easily retrievable. A data management system should be instituted to archive groundwater level, water quality, groundwater production, and river gage data. Available historic data should be entered to initially populate the database. The database should be capable of producing standard tables and graphics that can aid in the interpretation and presentation of trends in both groundwater level and quality.

The development of this GMP should evolve and change as new information and wells become available. As the program evolves, additional wells may be added and other wells may be removed. Preferably all monitoring wells should have well construction details. The figures, tables, and text in this GMP should be updated annually to reflect the changes implemented through the member agencies' groundwater management actions.

Figures

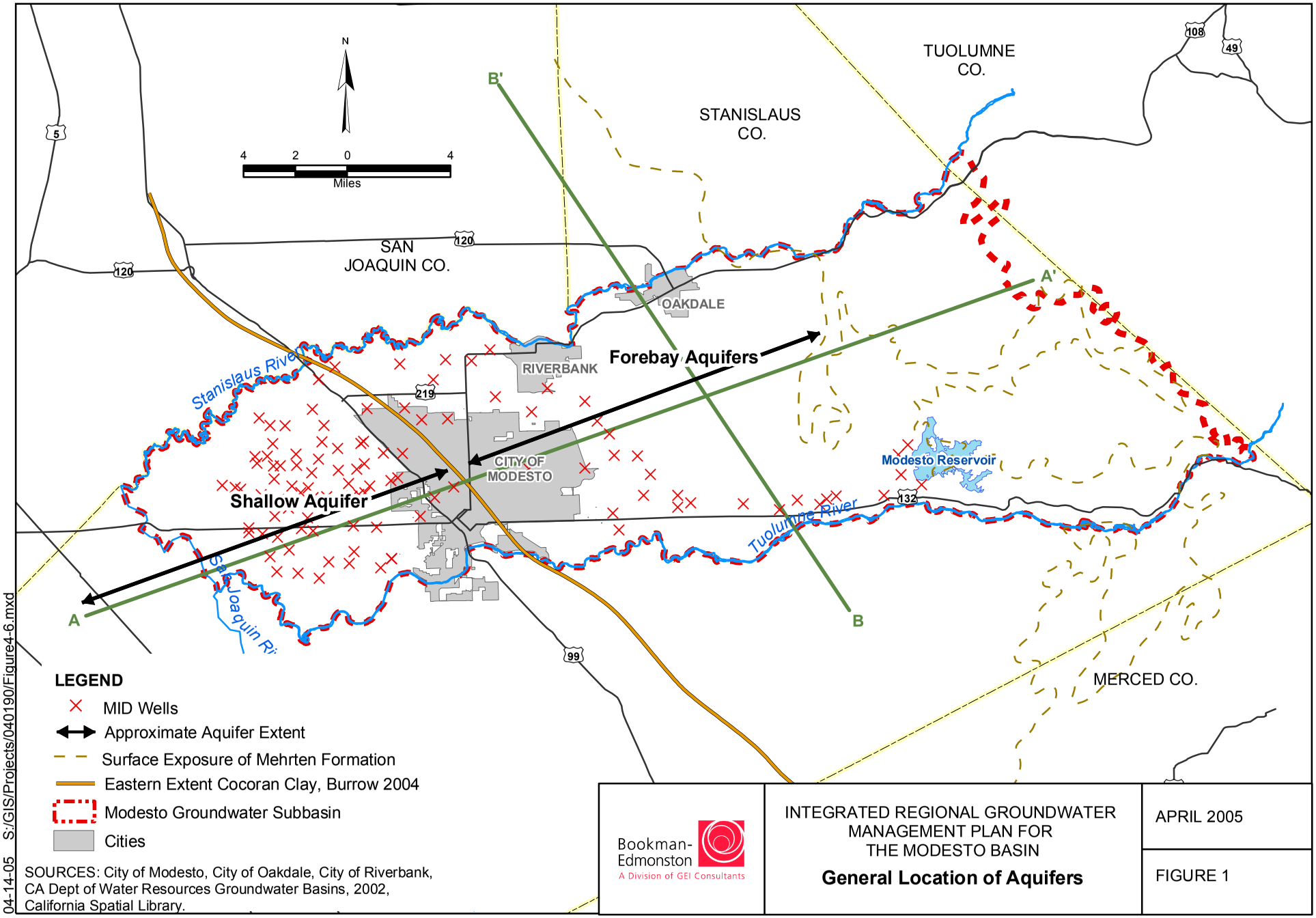
N
4 2 0 4
Miles
TUOLUMNE CO.
STANISLAUS CO.
SAN JOAQUIN CO.
MERCED CO.
B'
A'
A
B
OAKDALE
RIVERBANK
CITY OF MODESTO
Forebay Aquifers
Shallow Aquifer
Stanislaus River
Tuolumne River
San Joaquin Ri
Modesto Reservoir
5
120
219
132
99
108
49
LEGEND
MID Wells
Approximate Aquifer Extent
Surface Exposure of Mehrten Formation
Eastern Extent Cocoran Clay, Burrow 2004
Modesto Groundwater Subbasin
Cities
SOURCES: City of Modesto, City of Oakdale, City of Riverbank, CA Dept of Water Resources Groundwater Basins, 2002, California Spatial Library.
Bookman-Edmonston
A Division of GEI Consultants
INTEGRATED REGIONAL GROUNDWATER MANAGEMENT PLAN FOR THE MODESTO BASIN
General Location of Aquifers
APRIL 2005
FIGURE 1
04-14-05 S:/GIS/Projects/040190/Figure4-6.mxd

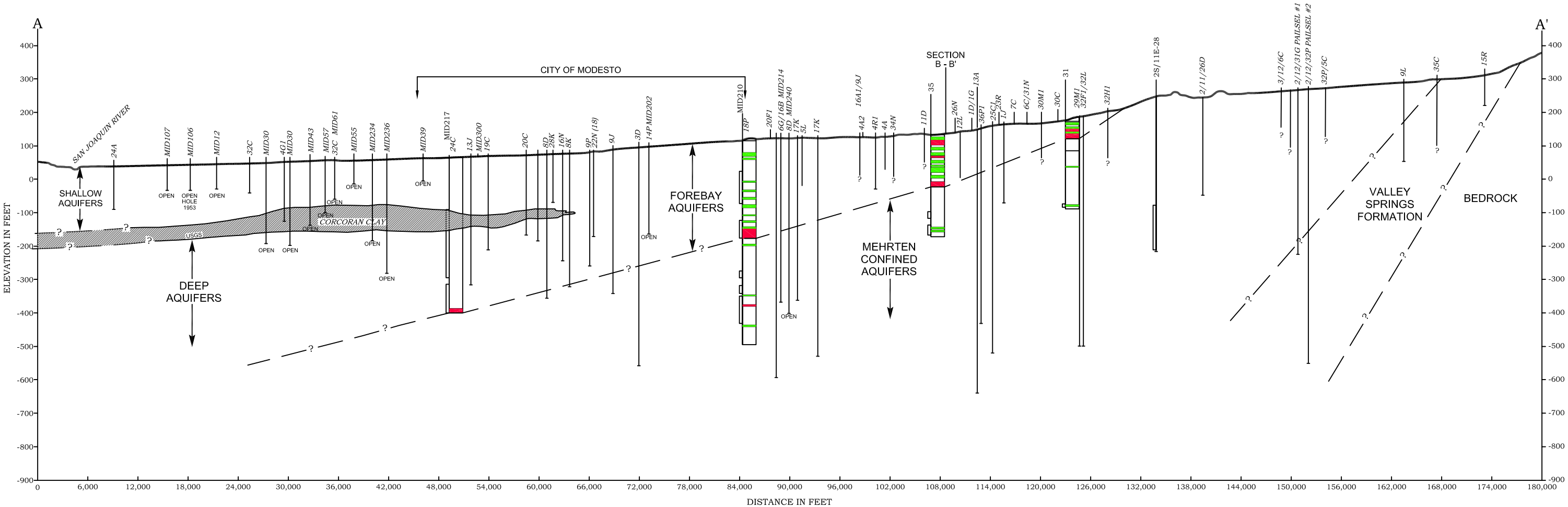

MODESTO GROUNDWATER SUBBASIN	Bookman-Edmonston A Division of GEI Consultants		GEOLOGIC SECTION A - A'
MODESTO, CALIFORNIA	042190.1000	SEPTEMBER 2004	FIGURE 2

S:\Water Resource\Projects\042190\1000\FIGURE_2.dwg

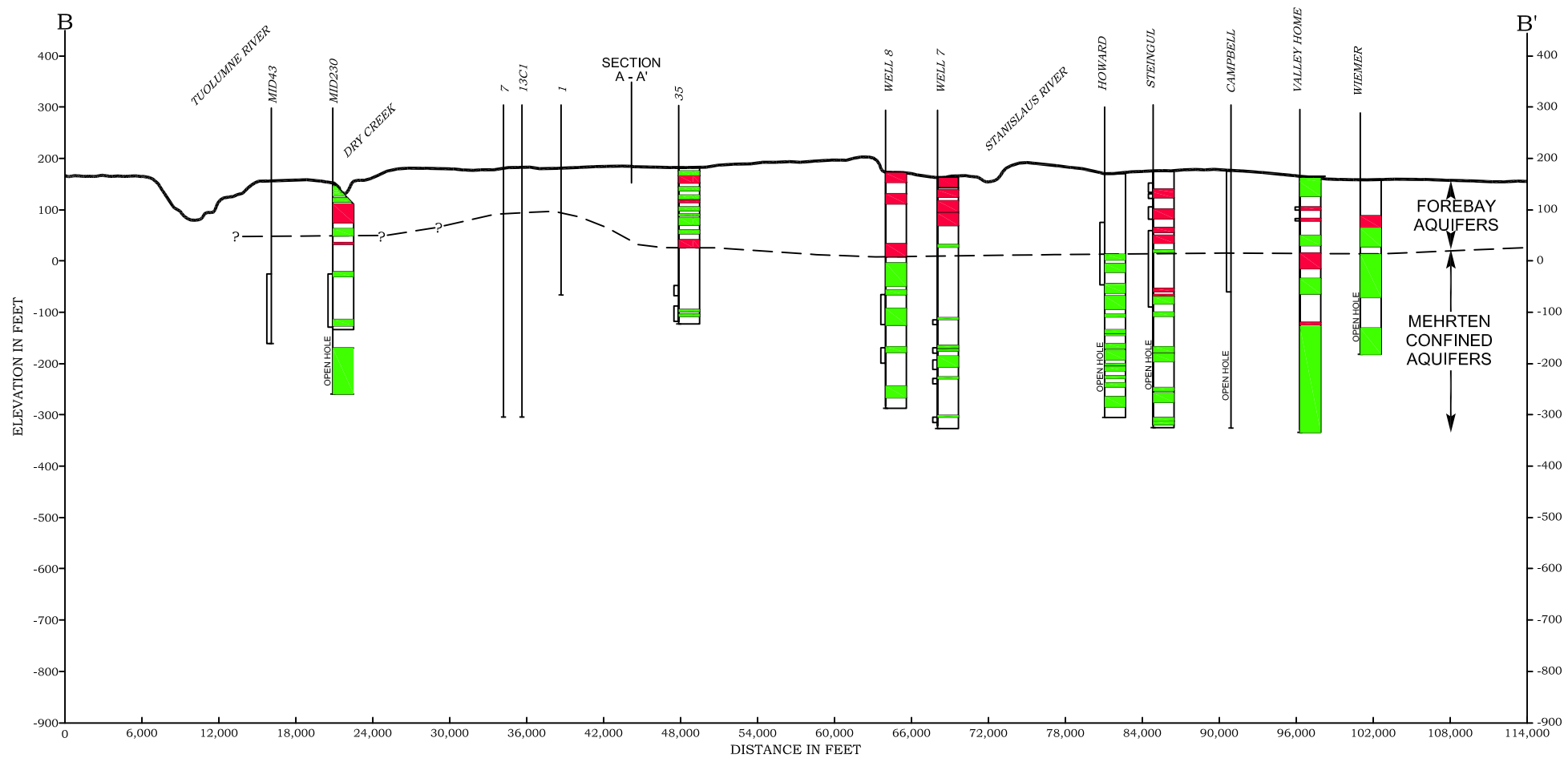

S:\Water Resource\Projects\042190\1000\FIGURE_3.dwg

MODESTO GROUNDWATER SUBBASIN	Bookman-Edmonston A Division of GEI Consultants	GEOLOGIC SECTION B - B'	
MODESTO, CALIFORNIA	042190.1000	SEPTEMBER 2004	FIGURE 3

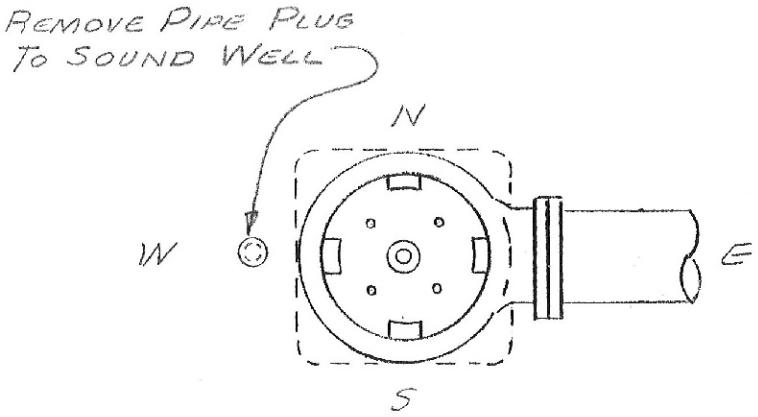

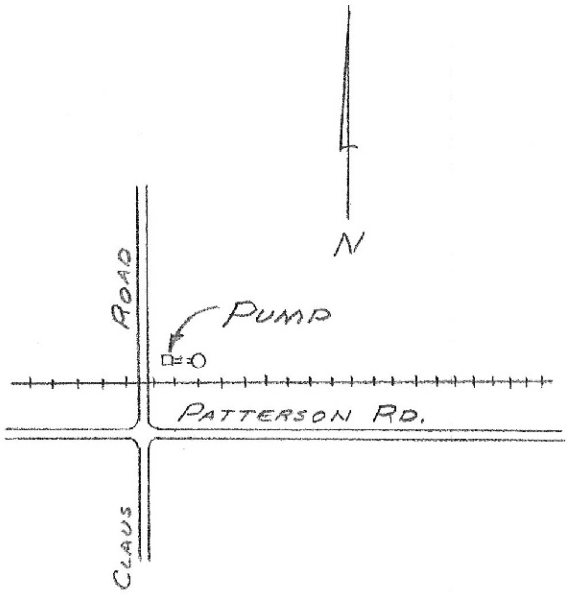

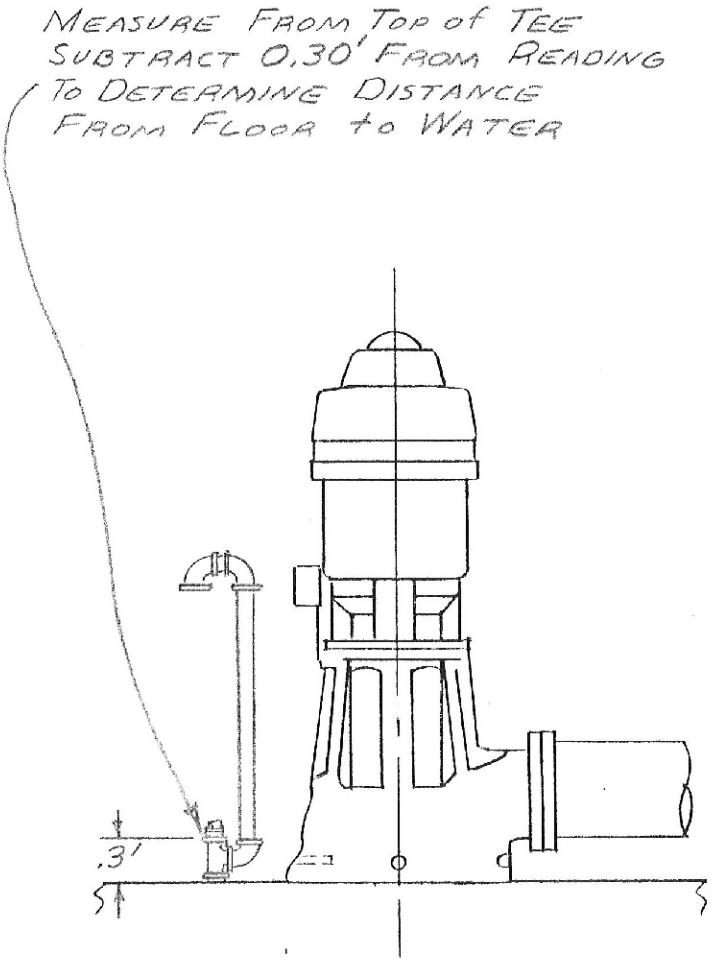

DRAWN BY: _____

DATE: _____

Bookman-Edmonston
A Division of GEI Consultants

TYPICAL WELL SOUNDING LOCATION DETAIL

Claus Road Well

SEPTEMBER 2004

FIGURE 4

06-11-04 S:/GIS/Projects/040190/Corel/SoundingDetail.cdr

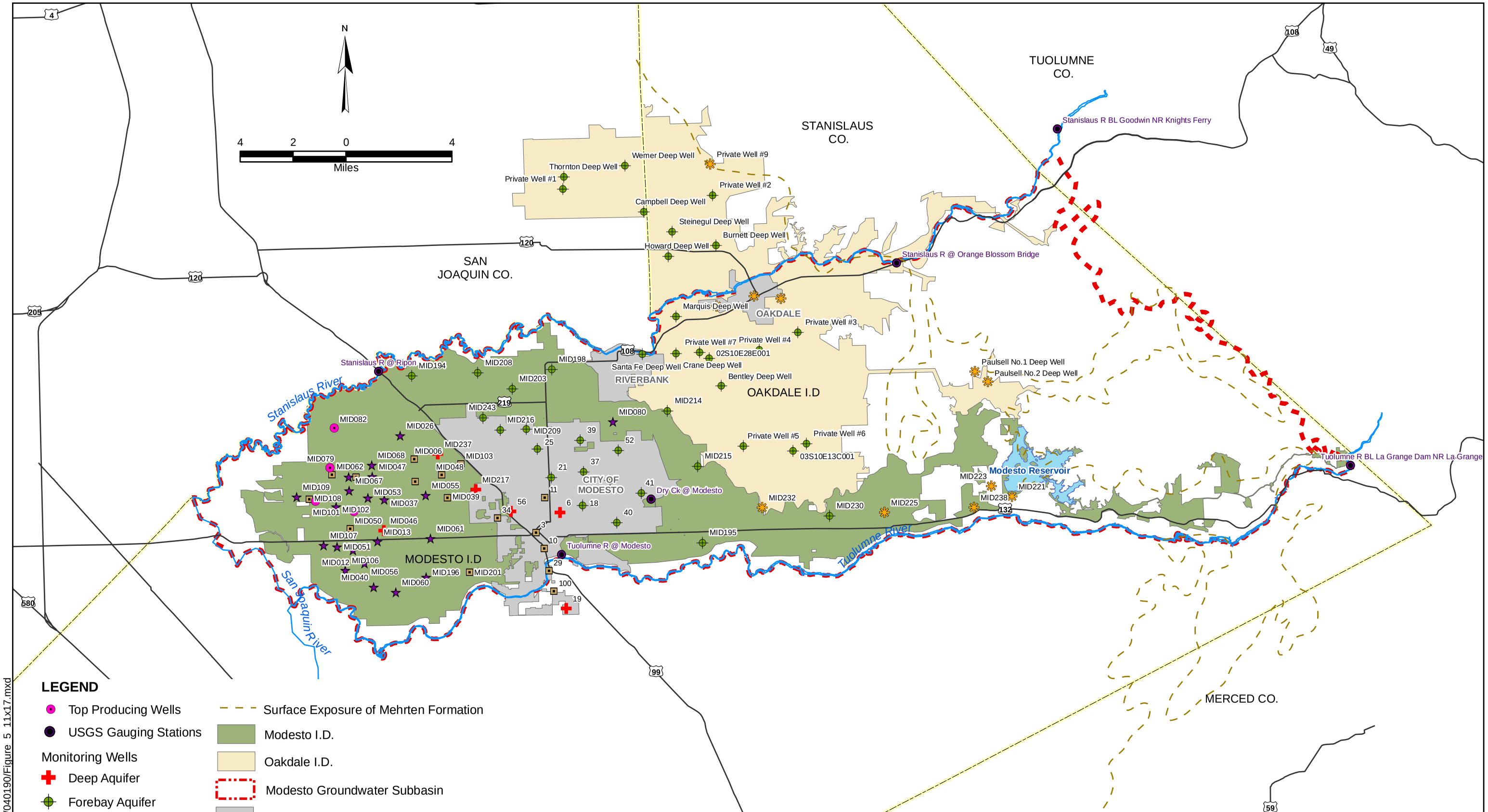

SOURCES: City of Modesto, City of Oakdale, City of Riverbank, CA Dept of Water Resources Groundwater Basins, 2002, California Spatial Library.

Bookman-Edmonston
A Division of GEI Consultants

MODESTO GROUNDWATER SUBBASIN

Groundwater Level and Quality Monitoring Network

SEPTEMBER 2004

FIGURE 5

09-29-04 S:/GIS/Projects/040190/Figure 5 11x17.mxd

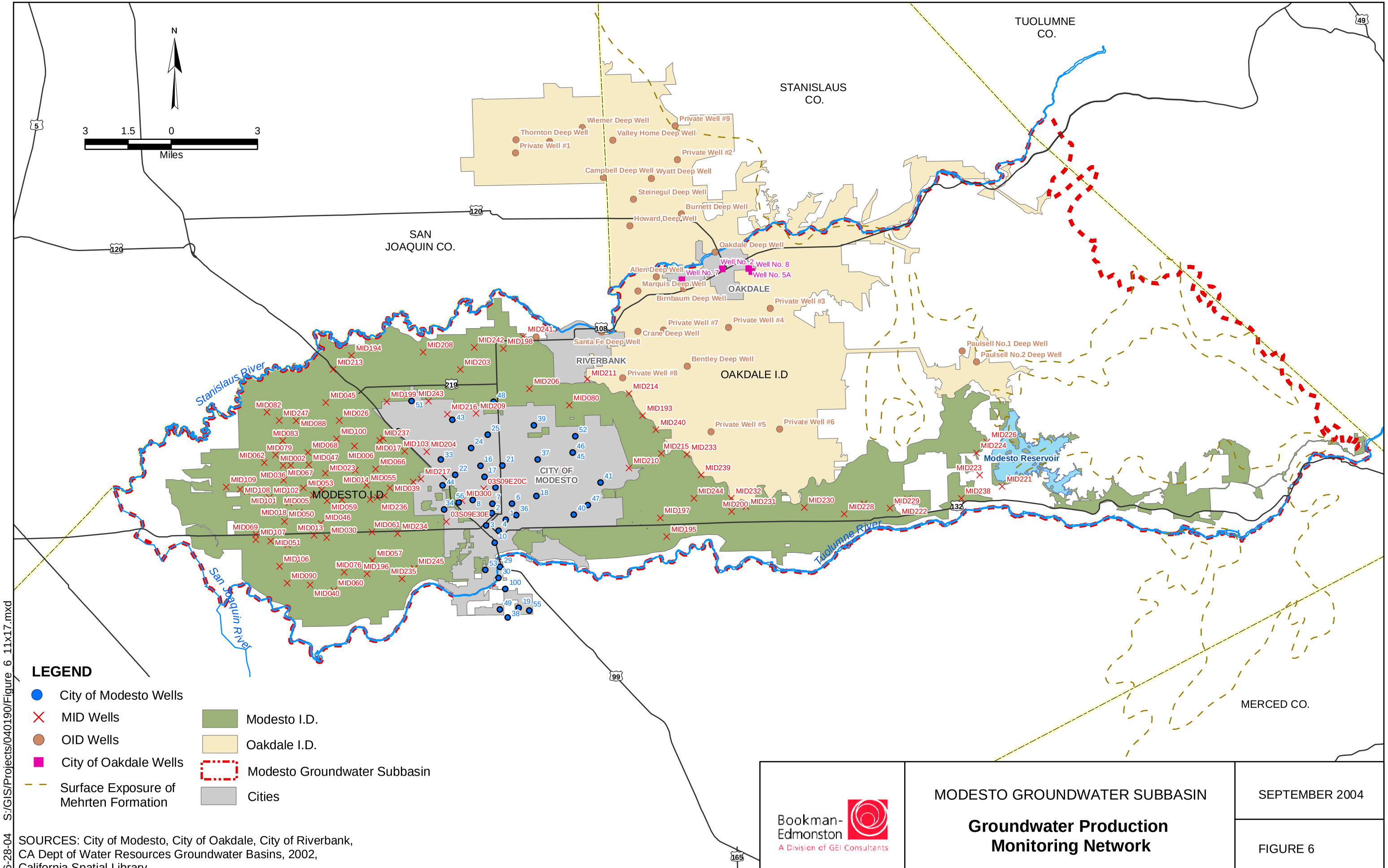

SOURCES: City of Modesto, City of Oakdale, City of Riverbank, CA Dept of Water Resources Groundwater Basins, 2002, California Spatial Library.

Bookman-Edmonston
A Division of GEI Consultants

MODESTO GROUNDWATER SUBBASIN

Groundwater Production Monitoring Network

SEPTEMBER 2004

FIGURE 6

06-28-04 S:/GIS/Projects/040190/Figure_6_11x17.mxd

Tables

TABLE 1
CURRENT LEVEL OF MONITORING EFFORTS

Member Agency	Total Number of Wells	Pumping Totals Monthly	Number of Wells Where Groundwater Levels Are Measured			Number of Wells Where Groundwater Samples Are Analyzed for Water Quality			Water Quality Analyses Performed
			Monthly	Semiannual	Annual	Quarterly	Semiannual	Annual	
MID	104	104		96			15		General Mineral, Boron
								104	EC + pH
OID	17	17		17					
City of Modesto	62	86				14 (VOCs)			Per Title 22 and DHS
Ceres	4	4							Per Title 22 and DHS
Walnut Manor	1	1							Per Title 22 and DHS
Salida	7	7							Per Title 22 and DHS
Del Rio	3	3				1			Per Title 22 and DHS
Waterford	7	7							Per Title 22 and DHS
Hickerman	2	2				1			Per Title 22 and DHS
City of Oakdale	7	7							Per Title 22 and DHS
City of Riverbank	7	7							Per Title 22 and DHS
Total	**221**	**245**	**0**	**113**	**0**	**16**	**15**	**104**	

Source: CCR from City of Modesto; MID e-mail comunication, 2004; OID well location map; Oakdale Water Master Plan, Riverbank production totals

Member Agency	Total Number of Wells	Pumping Totals Monthly	Number of Wells Where Groundwater Levels Are Measured			Number of Wells Where Groundwater Samples Are Analyzed for Water Quality			Water Quality Analyses Performed
			Monthly	Semiannual	Annual	Monthly to Every Three Years			
DWR (including									
Cooperators)	230			230					
OID	15						15		Drinking Water Parameters
Department of Health							209		Per Title 22 and DHS
Services (Including									Per Title 22 and DHS
Cooperators)									Per Title 22 and DHS
Total	**245**			**230**			**224**		

Source: DWR, 2004, Bulletin 118

TABLE 2
HIGH GROUNDWATER MONITORING WELLS

Well #	Yr. Drilled	Drilled Depth	Top of Casing	Bottom of Casing	Casing Type	Blank or Perf ?	Sanitary Seal
		(ft)	(ft)	(ft)			
MID012	1927	76	0	34	14" Casing	Perforated	Unknown
			34	76	Open Hole 12" dia	Open	
MID013	1927	86	0	40	No. 14 Gauge, 16" dia.	Perforated	Unknown
			40	86	Open Hole 14" dia.	Open	
MID026	1927	85	0	73	16" Casing	Perforated	Unknown
			73	85	Open Hole 14" dia.	Open	
MID036	1927	77	0	40	16" Casing	Perforated	Unknown
			40	77	Open Hole 14" dia.	Open	
MID037	1926	74	0	46	16" Casing	Perforated	Unknown
			46	74	Open Hole 14" dia.	Open	
MID040	1972	106	0	6	1/4" thick, 24" dia. Casin	Blank	No
			0	92	No. 8 Gauge 16" dia.	Perforated	
			92	106	Open Hole 24" dia	Open	
MID047	1927	85	0	43	16" Casing	Perforated	Unknown
			43	85	Open Hole 14" dia.	Open	
MID051	1969	152	0	104	No. 8 Gauge 14" dia.	Perforated	No
			104	117	No. 8 Gauge 14" dia.	Blank	
			117	152	Open Hole 14" dia.	Open	
MID053	1929	110	0	110	16" Casing	Perforated	Unknown
MID055	1930	72	0	48	No. 14 Gauge, 16" dia.	Perforated	Unknown
			48	72	Open Hole 14" dia.	Open	
MID056	1930	94	0	30	No. 14 Gauge, 16" dia.	Perforated	Unknown
			30	60	No. 14 Gauge, 14" dia.	Perforated	
			60	94	Open Hole 12" dia	Open	

TABLE 2
HIGH GROUNDWATER MONITORING WELLS

Well #	Yr. Drilled	Drilled Depth	Top of Casing	Bottom of Casing	Casing Type	Blank or Perf ?	Sanitary Seal
		(ft)	(ft)	(ft)			
MID060	1931	95	0	9	No. 14 Gauge, 18" dia. D	Blank	Unknown
			9	42	No. 14 Gauge, 18" dia. D	Perforated	
			45	70	No. 14 Gauge, 14" dia. D	Perforated	
			70	95	Open Hole 12" dia	Open	
MID061	1931	115	0	15	No. 14 Gauge, 18" dia. D	Blank	Unknown
			15	68	No. 14 Gauge, 18" dia. D	Perforated	
			45	90	No. 14 Gauge, 14" dia. D	Perforated	
			90	115	Open Hole 12" dia	Open	
MID067	1933	58	0	21	18" Casing	Perforated	Unknown
			21	45	18" Casing	Blank	
			45	58	16" Casing	Perforated	
MID068	1933	105	0	20	18" Casing	Perforated	Unknown
			20	48	18" Casing	Blank	
			48	72	12" Casing	Perforated	
			72	105	Open Hole 10" dia.	Open	
MID080	1938	155	0	45	18" Casing	Perforated	Unknown
			42	82	16" Casing	Perforated	
			76	81	14" Casing	Blank	
			81	141	14" Casing	Perforated	
			141	155	Open Hole 12" dia	Open	
MID102	1949	154	0	4	16" Casing	Blank	Unknown
			4	25	16" Casing	Perforated	
			25	40	16" Casing	Blank	
			82	85	14" Casing	Blank	
			85	117	Open Hole 12" dia	Perforated	
			117	154	12" Hole, caved in.	Open	

TABLE 2
HIGH GROUNDWATER MONITORING WELLS

Well #	Yr. Drilled	Drilled Depth	Top of Casing	Bottom of Casing	Casing Type	Blank or Perf ?	Sanitary Seal
		(ft)	(ft)	(ft)			
MID106	1953	95	0	8	No. 10 Gauge, 14" dia.	Perforated	No
			8	24	No. 10 Gauge, 14" dia.	Blank	
			24	68	No. 10 Gauge, 14" dia.	Perforated	
			68	72	No. 10 Gauge, 14" dia.	Blank	
			72	95	Open Hole 10" dia.	Open	
MID107	1953	76	0	35	14" Casing	Perforated	No
			35	76	Open Hole 12" dia	Open	
MID109	1967	137	0	82	No. 8 Gauge 16" dia.	Perforated	Unknown
			82	100	No. 8 Gauge 16" dia.	Blank	
			100	137	Open Hole 16" dia	Open	
MID196	1948	98	0	66	No. 12 Gauge, 18" dia.	Blank	No
			0	92	No. 10 Gauge 12" dia.	Perforated	
			92	98	Open Hole 10" dia.	Open	

TABLE 3
SHALLOW AQUIFER MONITORING WELLS

Well #	Yr. Drilled	Drilled Depth	Top of Casing	Bottom of Casing	Casing Type	Blank or Perf ?	Sanitary Seal
		(ft)	(ft)	(ft)			
MID006	1924	41	0	32	14" Casing	Blank	Unknown
			31	41	Open Hole 12" dia	Open	
MID014	1923	93	0	56	16" Casing	Blank	Unknown
			56	93	Open Hole 14" dia.	Perforated	
MID034	1973	94	0	80	No. 8 Gauge 14" di	Blank	Unknown
			80	94	Open Hole 14" dia.	Open	
MID039	1924	74	0	41	16" Casing	Blank	Unknown
			41	74	Open Hole 14" dia.	Open	
MID048	1924	100	0	10	Sump & Drain	Blank	Unknown
			10	28	18" Casing	Blank	
			28	62	12" Casing	Blank	
			62	100	Open Hole 10" dia.	Open	
MID050	1949	67	0	40.5	No. 12 Gauge, 16"	Blank	Unknown
			40.5	67	Open Hole 14" dia.	Open	
MID062	1931	75	0	21	No. 14 Gauge, 16"	Blank	Unknown
			21	56	No. 14 Gauge, 16"	Perforated	
			56	75	Open Hole 14" dia.	Open	
MID103	1949	130	0	54	16" Casing	Blank	Unknown
			53	81	12" Casing	Perforated	
			81	120	Open Hole 10" dia.	Open	
			120	130	10" Hole, caved in.		
MID108	1955	90	0	70	No. 12 Gauge, 14"	Blank	None
			70	90	Open Hole 14" dia.	Open	
MID201	1949	88	0	36	No. 12 Gauge, 18"	Blank	Unknown
			36	48	Open Hole 16" dia	Open	
			48	58	No. 12 Gauge, 16"	Blank	
			58	74	No. 12 Gauge, 16"	Perforated	
			74	78	No. 12 Gauge, 16"	Blank	
			78	88	Open Hole 12" dia	Open	

TABLE 3
SHALLOW AQUIFER MONITORING WELLS

Well #	Yr. Drilled	Drilled Depth	Top of Casing	Bottom of Casing	Casing Type	Blank or Perf ?	Sanitary Seal
		(ft)	(ft)	(ft)			
City of Mod.	1956	138	0	92	14" dia. Steel	Blank	Unknown
Well #3			92	138	Open Hole	Open	
City of Mod.	1939	110	0	?	24 inch dia. Steel	Blank	Unknown
Well #10			?	?	20 inch dia. Steel	Blank	
			?	110	10 inch dia. Steel	Blank	
City of Mod.	1936	125	0	?	24" dia. Steel	Blank	Unknown
Well #11			?	?	20" dia. Steel	Blank	
			?	?	14" dia. Steel	Blank	
			116	125	Open Hole	Open	
City of Mod.	1964	144	0	138	14" dia.Steel	Blank	Unknown
Well #29			138	144	Open Hole	Open	
City of Mod.	1967	112	0	100	16" dia. Casing	Blank	Unknown
Well #34				112	Open Hole	Open	
City of Mod.	1958	127	0	?	14" dia. Steel	Blank	Unknown
Well #100			?	80	12" dia. Steel	Blank	
			80	127	Open Hole	Open	

TABLE 4
DEEP AQUIFER MONITORING WELLS

Well #	Yr. Drilled	Drilled Depth	Top of Casing	Bottom of Casing	Casing Type	Blank or Perf ?	Sanitary Seal
		(ft)	(ft)	(ft)			
MID046	1925	240	0	151	12" Casing	Blank	Unknown
			151	240	Open Hole 10" dia.	Open	
MID217	1961	467	0	120	No. 10 Gauge 18" dia.	Blank	Unknown
			116	124	No. 8 Gauge 16" dia.	Blank	
			124	152	No. 8 Gauge 14" dia.	Blank	
			152	364	No. 8 Gauge 14" dia.	Perforated	
			364	368	No. 8 Gauge 14" dia.	Blank	
			368	467	UNKNOWN		
MID237	1991	297	0	32	No. 10 Gauge 24" dia.	Blank	0-32'
			0	164	No. 8 Gauge 18" dia.	Blank	
			155	159	No. 10 Gauge 16" dia.	Blank	
			159	251	No. 10 Gauge 16" dia.	Perforated	
			251	255	No. 10 Gauge 16" dia.	Blank	
			255	297	Open Borehole	Open	
City of Mod.	1921	234	0	175	18" dia. Steel	Blank	Unknown
Well #6			175	234	Open Borehole	Open	
City of Mod.	1957	240	0	240	18" dia. Steel	Blank	Unknown
Well #19							
City of Mod.	Unknown	255		180	16" dia. Steel	Blank	Unknown
Well #56			180	255	Open Borehole	Open	

Note: **Currently only one well is screened solely beneath the Corcoran clay. The other wells should be replaced with wells that are screened solely below the Corcoran clay. Until then, monitor these wells to provide a general indication of the conditions.**

TABLE 5
FOREBAY AQUIFER MONITORING WELLS

Well #	Yr. Drilled	Drilled Depth (ft)	Top of Casing (ft)	Bottom of Casing (ft)	Casing Type	Blank or Perf ?	Sanitary Seal
MID194	1948	302	0	106	18" Casing	Blank	Unknown
			100	150	16" Casing	Blank	
			148	182	3/16" thick, 12" dia.	Perforated	
			182	211	3/16" thick, 12" dia.	Blank	
			211	302	Open Hole 10" dia.	Open	
MID195	1948	260	0	136.5	No. 12 Gauge, 18" dia.	Blank	Unknown
			127	140.5	16" Casing	Blank	
			140.5	149.5	16" Casing	Perforated	
			149.5	152.5	16" Casing	Blank	
			152.5	164.5	16" Casing	Perforated	
			164.5	169	16" Casing	Blank	
			170	185	14" Casing	Blank	
			185	210	14" Casing	Perforated	
			210	233	14" Casing	Blank	
			233	260	Open Hole 11" dia.	Open	
MID198	1980	258	0	124	No. 8 Gauge 16" dia.	Blank	No
			105	109	No. 10 Gauge, 14" dia.	Blank	
			109	209	No. 10 Gauge, 14" dia.	Perforated	
			209	213	No. 10 Gauge, 14" dia.	Blank	
MID 202	1949	255	0	78	No. 12 Gauge, 18" dia. Do	Blank	Unknown
			76	92	No. 12 Gauge, 16" dia. Do	Perforated	
			92	152	No. 12 Gauge, 16" dia. Do	Blank	
			131	204	3/16" thick, 14" dia.	Perforated	
			204	222	3/16" thick, 14" dia.	Blank	
			222	255	Open Hole 12" dia	Open	
MID203	1949	384	0	136	No. 12 Gauge, 18" dia. Do	Blank	Unknown
			135	151	No. 12 Gauge, 16" dia. Do	Blank	
			151	175	No. 12 Gauge, 16" dia. Do	Perforated	
			166	187	No. 12 Gauge, 14" dia.	Blank	
			175	180	No. 12 Gauge, 16" dia. Do	Blank	
			187	229	No. 12 Gauge, 14" dia.	Perforated	
			229	250	No. 12 Gauge, 14" dia.	Blank	
			250	259	Open Hole 14" dia.	Open	
			259	277	3/16" thick, 12" dia.	Blank	
			277	313	3/16" thick, 12" dia.	Perforated	
			313	331	3/16" thick, 12" dia.	Blank	
			331	384	Open Hole 10" dia.	Open	

TABLE 5
FOREBAY AQUIFER MONITORING WELLS

Well #	Yr. Drilled	Drilled Depth (ft)	Top of Casing (ft)	Bottom of Casing (ft)	Casing Type	Blank or Perf ?	Sanitary Seal
MID208	1950	320	0	98	No. 12 Gauge, 18" dia. Do	Blank	Unknown
			79	119	No. 10 Gauge 16" dia.	Perforated	
			119	139	No. 10 Gauge 16" dia.	Blank	
			128	203	No. 12 Gauge, 14" dia.	Perforated	
			196	272	No. 12 Gauge, 12" dia.	Perforated	
			272	276	No. 12 Gauge, 12" dia.	Blank	
			276	320	Open Hole 10" dia.	Open	
MID209	1949	424	0	90	No. 12 Gauge, 18" dia. Do	Blank	Unknown
			78	108	No. 10 Gauge 16" dia.	Perforated	
			108	128	No. 10 Gauge 16" dia.	Blank	
			128	148	No. 10 Gauge 16" dia.	Perforated	
			148	168	No. 10 Gauge 16" dia.	Blank	
			158	230	No. 12 Gauge, 14" dia.	Perforated	
			230	248	No. 12 Gauge, 14" dia.	Blank	
			248	284	Open Hole 14" dia.	Open	
			284	365	No. 12 Gauge, 12" dia.	Perforated	
			365	384	No. 12 Gauge, 12" dia.	Blank	
			384	424	Open Hole 10" dia.	Open	
MID214	1959	480	0	116	No. 10 Gauge 18" dia. Dou	Blank	0-116'
			107	275	No. 8 Gauge 14" dia.	Perforated	
			275	362	Open Hole 11" dia.	Open	
			362	480	Exploratory Borehole 6" di	Open	
MID215	1959	476	0	106	No. 10 Gauge 18" dia.	Blank	Unknown
			106	116	Open Hole 18" dia.	Open	
			116	216	No. 12 Gauge, 16" dia.	Perforated	
			198	310	No. 12 Gauge, 14" dia.	Perforated	
			306	400	No. 12 Gauge, 12" dia.	Perforated	
			400	476	Open Hole 10" dia.	Open	
MID216	1960	382	0	114	No. 12 Gauge, 18" dia. Do	Blank	Unknown
			110	128	No. 8 Gauge 14" dia.	Blank	
			128	380	No. 8 Gauge 14" dia.	Perforated	
MID230	1989	412	0	28	No. 8 Gauge 24" dia.	Blank	0-30'
			0	192	No. 8 Gauge 18" dia.	Blank	
			175	179	No. 10 Gauge 16" dia.	Blank	
			179	283	No. 10 Gauge 16" dia.	Perforated	
			283	287	No. 10 Gauge 16" dia.	Blank	
			287	412	Open Borehole	Open	

TABLE 5
FOREBAY AQUIFER MONITORING WELLS

Well #	Yr. Drilled	Drilled Depth (ft)	Top of Casing (ft)	Bottom of Casing (ft)	Casing Type	Blank or Perf ?	Sanitary Seal
MID243	1996	346	0	20	No. 10 Gauge 24" dia.	Blank	0-20'
			0	148	No. 8 Gauge 18" dia.	Blank	
			141	251	No. 10 Gauge 16" dia.	Perforated	
			251	346	Open Borehole	Open	
OID-Bentley							
OID-Burnett							
OID-Campbell	1948	502	0	118	18" dia Casing	Perforated	
			118	240	14" dia Casing	Perforated	
OID-Crane							
OID-Howard	Unknown	475	0	?	18" dia. Casing	Blank	Unknown
			?	102	18" dia Casing	Perforated	
			98	232	14" dia Casing	Perforated	
			232	475	Open Borehole	Open	
OID-Marquis							
OID Santa Fe							
OID-Steinegul	1943	500	0	43	18" dia. Casing	Blank	Unknown
			43	53	18" dia Casing	Perforated	
			53	69	18" dia Casing	Blank	
			69	93	18" dia Casing	Perforated	
			93	115	14" dia Casing	Blank	
			115	265	14" dia Casing	Perforated	
			265	362	Open Borehole	Open	
OID-Thornton							
OID-Wemer							
OID-Private well #1							
OID-Private well #2							
OID-Private well #3							

TABLE 5
FOREBAY AQUIFER MONITORING WELLS

Well #	Yr. Drilled	Drilled Depth (ft)	Top of Casing (ft)	Bottom of Casing (ft)	Casing Type	Blank or Perf ?	Sanitary Seal
OID-Private well #4							
OID-Private well #5							
OID-Private well #6							
OID-Private well #7							
City of Mod.	1956	250	0	104	20" dia. Steel Casing	Blank	Unknown
Well #18			104	232	14" dia. Steel Casing	Perforated	
			232	250	Open Hole	Open	
City of Mod.	1959	320	0	144	20" dia. Steel casing	Blank	Unknown
Well # 21			144	294	14" dia. Steel Casing	Perforated	
			294	320	12" dia. Open Hole	Open	
City of Mod.	1962	395	0	91	20" dia. Steel casing	Blank	Unknown
Well # 25			91	366	16" dia. Steel Casing	Perforated	
			366	395	12" dia. Open Hole	Open	
City of Mod.	1970	228	0	102	20" dia. Steel casing	Blank	110
Well # 37			102	214	18" dia. Well Screen	Perforated	
			214	218	18" dia. Steel casing	Blank	
			218	228	Unknown	Unknown	
City of Mod.	1972	292	0	116	24" dia. Steel casing	Blank	50
Well # 39			116	216	18" dia. Well Screen	Perforated	
			216	220	18" dia. Steel casing	Blank	
			220	292	Open Hole	Open	
City of Mod.	1974	275	0	97	24" dia. Steel casing	Blank	52
Well # 40			97	229	20" dia. Well Screen	Perforated	
			229	233	20" dia. Steel casing	Blank	
			233	275	18" dia. Open Hole	Open	
City of Mod.	1976	248	0	124	24" dia. Steel casing	Blank	52
Well # 41			124	216	20" dia. Well Screen	Perforated	
			216	220	20" dia. Steel casing	Blank	
			220	248	18" dia. Open Hole	Open	

TABLE 5
FOREBAY AQUIFER MONITORING WELLS

Well #	Yr. Drilled	Drilled Depth (ft)	Top of Casing (ft)	Bottom of Casing (ft)	Casing Type	Blank or Perf ?	Sanitary Seal
City of Mod.	1992	280	0	120	18" dia. Steel casing	Blank	100
Well # 52			120	195	18" dia. Well Screen	Perforated	
			195	255	18" dia. Steel casing	Blank	
			255	270	18" dia. Well Screen	Perforated	
			270	280	18" dia. Steel casing	Blank	
2S/10E-28E1	Unknown	196	0	111	Unknown	Blank	Unknown
			111	196	Open Hole		
3S/10E-13C1	1952	108	0	95	7" dia Steel	Unknown	Unknown

Notes: All wells without construction details listed in this table should be evaluated to confirm within the Forebay aquifers

These wells may be obtaining water from both the Mehrten Confined and Forebay aquifers. These wells should be replaced with wells that are screened solely within the Forebay aquifers. Until then, monitor these wells to provide a general indication of the conditions. Replacement wells may be found through DWR.

Conflicting data regarding well screen interval versus sanitary seal depths

TABLE 6
MEHRTEN CONFINED AQUIFER MONITORING WELLS

Well #	Yr. Drilled	Drilled Depth	Top of Casing	Bottom of Casing	Casing Type	Blank or Perf ?	Sanitary Seal
		(ft)	(ft)	(ft)			
MID221	1994	510	0	320	1/4" thick, 16" dia. Casi	Blank	0-50'
			320	500	1/4" thick, 16" dia. Casi	Perforated	
			500	510	1/4" thick, 16" dia. Casi	Blank	
MID225	1960	235	0	104	No. 10 Gauge, 14" dia.	Blank	Unknown
			103	171	No. 12 Gauge, 12" dia.	Perforated	
			160	220	No. 12 Gauge, 10" dia.	Perforated	
			220	235	Open Hole 10" dia.	Open	
MID223	1959	380	0	116	No. 10 Gauge, 14" dia.	Blank	Unknown
			116	168	Open Hole 14" dia.	Open	
			168	208	No. 12 Gauge, 12" dia.	Perforated	
			208	380	Open Borehole	Open	
MID232	1989	460	0	16	No. 10 Gauge 24" dia.	Blank	0-20'
			0	216	No. 8 Gauge 18" dia.	Blank	
			192	196	No. 10 Gauge 16" dia.	Blank	
			196	288	No. 10 Gauge 16" dia.	Perforated	
			288	292	No. 10 Gauge 16" dia.	Blank	
			292	460	Open Borehole	Open	
MID238	1994	484	0	24	No. 8 Gauge 24" dia.	Blank	0-24'
			0	196	No. 8 Gauge 18" dia.	Blank	
			196	484	Open Hole 12" dia	Open	
OID - private well #9							
Paulsell No. 1							
Paulsell No. 2	1945	830	0	54	No. 12 Gauge, 20" dia.	Blank	Unknown
			54	132	No. 12 Gauge, 18" dia.	Blank	
			132	159	16" dia.	Blank	
			159	830	Open Borehole	Open	

TABLE 6
MEHRTEN CONFINED AQUIFER MONITORING WELLS

Well #	Yr. Drilled	Drilled Depth	Top of Casing	Bottom of Casing	Casing Type	Blank or Perf ?	Sanitary Seal
		(ft)	(ft)	(ft)			
City of Oakdale #2	1954	565	0	156	Casing	Blank	0-164'
			156	565	Perforated	Perforated	
City of Oakdale #7	1990	478	0	274	Casing	Blank	0-100'
			274	478	Perforated	Perforated	
City of Oakdale #8	1990	380	0	240	Casing	Blank	0-170'
			240	380	Perforated	Perforated	

Notes: **This well may be obtaining water from both the Mehrten Confined and Forebay aquifers. This well should be replaced with a well that is screened solely within the Forebay aquifers. Until then, monitor this well to provide a general indication of the conditions. Replacement wells may be found through DWR**

TABLE 7
MID TOP PRODUCING WELLS

Well #	Yr. Drilled	Drilled Depth	Top of Casing	Bottom of Casing	Casing Type	Blank or Perf ?	Sanitary Seal
		(ft)	(ft)	(ft)			
MID018	1965	136	0	24	No. 12 Gauge 24" dia.	Blank	No
			0	36	No. 8 Gauge 14" dia.	Blank	
			36	96	No. 8 Gauge 14" dia.	Perforated	
			96	100	No. 8 Gauge 14" dia.	Blank	
			100	136	Open Borehole	Perforated	
MID034	1973	94	0	80	No. 8 Gauge 14" dia.	Blank	Unknown
			80	94	Open Hole 14" dia.	Open	
MID062	1931	75	0	21	No. 14 Gauge, 16" dia. D	Blank	Unknown
			21	56	No. 14 Gauge, 16" dia. I	Perforated	
			56	75	Open Hole 14" dia.	Open	
MID079	1937	198	0	115.5	16" Casing	Perforated	Unknown
			115.5	198	Open Hole 14" dia.	Open	
MID082	1938	200	0	48	18" Casing	Blank	Unknown
			45	68	16" Casing	Perforated	
			60	79	PVC	Blank	
			79	94	14" Casing	Perforated	
			91	99	12" Casing	Perforated	
			99	120	PVC	Blank	
			120	200	Open Hole 10" dia.	Open	
MID101	1949	64	0	44	16" Casing	Blank	Unknown
			44	64	Open Hole 14" dia.	Open	
MID108	1955	90	0	70	No. 12 Gauge, 14" dia. D	Blank	No
			70	90	Open Hole 14" dia.	Open	

Notes: **Seven of the top ten are listed above. The remaining three wells have been incorporated into monitoring network.**

TABLE 8
AQUIFER-RIVER CONNECTEDNESS MONITORING WELLS

Well #	Yr. Drilled	Drilled Depth (ft)	Top of Casing (ft)	Bottom of Casing (ft)	Casing Type	Blank or Perf ?	Sanitary Seal

Obtain Information From: _____

Table 9
Surface Water Gaging Stations

Gaging Station Name	Gaging Station ID	Monitoring Agency	Elevation (feet above mean sea level)
Stanislaus River below Goodwin near Knights Ferry	SKF	USGS	253
Stanislaus River at Orange Blossom Bridge	OBB	DWR	117
Stanislaus River at Ripon	RIP	USGS	73
Tuolumne River below La Grange Dam	LGN	USGS	170
Dry Creek at Modesto	DCM	DWR	88
Tuolumne River at Modesto	MOD	DWR	90

Obtain USGS Information at http://waterdata.usgs.gov/ca/nwis/rt
Obtain DWR Information at http://wwwdpla.water.ca.gov/sjd/surfacewater/index.html

Table 10
Groundwater Monitoring Summary

Well Name	Monthly Production [1]	Groundwater Level Monitoring				Groundwater Quality	
		Monthly	Quarterly	Semiannnual	Annual	Semiannual	Annual
OID - Paulsell No. 1	X			X		X	X
OID - Paulsell No. 2	X			X		X	X
OID-Bentley	X			X		X	X
OID-Burnett	X			X		X	X
OID-Campbell	X			X		X	X
OID-Crane	X			X		X	X
OID-Howard	X			X		X	X
OID-Marquis	X			X		X	X
OID-Santa Fe	X			X		X	X
OID-Steinegul	X			X		X	X
OID-Thornton	X			X		X	X
OID-Wemer	X			X		X	X
OID-Private well #1	X			X		X	X
OID-Private well #2	X			X		X	X
OID-Private well #3	X			X		X	X
OID-Private well #4	X			X		X	X
OID-Private well #5	X			X		X	X
OID-Private well #6	X			X		X	X
OID-Private well #7	X			X		X	X
OID - private well #9	X			X		X	X
MID006	X			X		X	X
MID012	X			X		X	X
MID013	X			X		X	X
MID014	X			X		X	X
MID018	X			X		X	X
MID026	X			X		X	X
MID034	X			X		X	X
MID034	X			X		X	X
MID036	X			X		X	X
MID037	X			X		X	X
MID039	X			X		X	X
MID040	X			X		X	X
MID046	X			X		X	X
MID047	X			X		X	X
MID048	X			X		X	X
MID050	X			X		X	X
MID051	X			X		X	X
MID053	X			X		X	X
MID055	X			X		X	X
MID056	X			X		X	X
MID060	X			X		X	X
MID061	X			X		X	X
MID062	X			X		X	X
MID062	X			X		X	X
MID067	X			X		X	X
MID068	X			X		X	X
MID079	X			X		X	X
MID080	X			X		X	X
MID082	X			X		X	X
MID101	X			X		X	X
MID102	X			X		X	X
MID103	X			X		X	X
MID106	X			X		X	X
MID107	X			X		X	X
MID108	X			X		X	X
MID108	X			X		X	X
MID109	X			X		X	X

Table 10
Groundwater Monitoring Summary

Well Name	Monthly Production [1]	Groundwater Level Monitoring				Groundwater Quality	
		Monthly	Quarterly	Semiannnual	Annual	Semiannual	Annual
MID194	X			X		X	X
MID195	X			X		X	X
MID196	X			X		X	X
MID198	X			X		X	X
MID201	X			X		X	X
MID202	X			X		X	X
MID203	X			X		X	X
MID208	X			X		X	X
MID209	X			X		X	X
MID214	X			X		X	X
MID215	X			X		X	X
MID216	X			X		X	X
MID217	X			X		X	X
MID221	X			X		X	X
MID223	X			X		X	X
MID225	X			X		X	X
MID230	X			X		X	X
MID232	X			X		X	X
MID237	X			X		X	X
MID238	X			X		X	X
MID243	X			X		X	X
City of Oakdale #8	X			X		X	X
City of Oakdale #7	X			X		X	X
City of Oakdale #2	X			X		X	X
City of Mod. Well #3	X			X		X	X
City of Mod. Well #6							
City of Mod. Well #11	X			X		X	X
City of Mod. Well #18	X			X		X	X
City of Mod. Well #19	X			X		X	X
City of Mod. Well #21	X			X		X	X
City of Mod. Well #25	X			X		X	X
City of Mod. Well #29	X			X		X	X
City of Mod. Well #34	X			X		X	X
City of Mod. Well #37	X			X		X	X
City of Mod. Well #39	X			X		X	X
City of Mod. Well #40	X			X		X	X
City of Mod. Well #41	X			X		X	X
City of Mod. Well #52	X			X		X	X
City of Mod. Well #56	X			X		X	X
City of Mod. Well #100	X			X		X	X
3S/10E-13C1[2]					X		
2S/10E-28E1[2]					X		

Notes: 1 = Monitor production in all wells including those on this list
2 = Obtain water level measurements from DWR website at http://www.well.water.ca.gov/

TABLE 11
TYPICAL PRODUCTION METER READ FORM

Date: _____

MONTHLY WATER METER READINGS **Measured by:** _____

WELLS - WATER METERS

WELL NO.	COMMON NAME	START	FINISH	TOTAL (Acre-Feet)
		0		0
		0		0
		0		0
		0		0
		0		0
		0		0
		0		0
		0		0
		0		0
		0		0
		0		0
		0		0
		0		0
		0		0
		0		0
		0		0
		0		0
		0		0
	TOTALS			**0**

Comments:

TABLE 12
Semiannual Groundwater Level and Sampling Form

Measured by: ______________________________

Well ID	Common Name	Date	Time	Depth to Water (Feet)	EC (umhos/cm)	Comments

TABLE 13
PURGE VOLUME ESTIMATION SHEET

1. WELL SITE ID NO.: _____
2. DATE: _____
3. YEAR WELL CONSTRUCTED-INSTALLED:_____
4. CASING MATERIAL:_____
5. WELL DIAMETER: _____ inches (in)
6. WELL DEPTH: _____ feet (ft)
7. DEPTH TO WATER: _____ (ft)
8. COLUMN OF WATER (line 7 - line 6):_____ (ft)

TIME: _____

FIELD TECH(S): _____

WEATHER CONDITIONS: _____ (eg. hot, cold, clear, etc)

REFERENCE POINT (R.P) _____ (ft)

DESCRIPTION:_____ (eg. top of casing)

PH METER (TYPE AND MODEL NO.)_____

CALIBRATED (yes/no)_____DATE:_____

FIELD CALIBRATED (yes/no)_____DATE:_____

EC METER (TYPE AND MODEL NO.)_____

CALIBRATED (yes/no)_____DATE:_____

FIELD CALIBRATED (yes/no)_____DATE:_____

WELL VOLUME CALCULATION

9. ONE WELL VOLUME (**V**) = Enter Line 5 (in) = _____ / 24=(_____)^2= _____x 3.1416=_____ x line 8=_____ft^3
10. ONE WELL VOLUME (**V** in gallons) = $V_{(line\ 9)}$ x 7.48 = _____ gal
11. THREE WELL VOLUMES (in gallons) = $V_{(line\ 10)}$ x 3 = _____ gal

WELL PURGE TIME CALCULATION

12 WELL DISCHARGE RATE (**Q**) gallons per minute (gpm) or _____ gpm from meter

13 WELL PURGE TIME (THREE WELL VOLUMES) = $\mathbf{V}_{(line\ 11)}$ / $\mathbf{Q}_{(line\ 12)}$ = _____ min

ADDITIONAL FIELD NOTES

15 TIME PUMP TURNED "ON": _____

16 TIME PUMP TURNED "OFF": _____

17 ELAPSED PURGE TIME: _____ (min)

COMMENTS

TABLE 14
Analytical Parameters, Test Methods, Holding Times,
Sample Containers, Preservation and Approximate Detection Limits
For Groundwater Samples
Groundwater Monitoring Plan

Parameter	ANALYTICAL TESTING METHOD	MAXIMUM HOLDING TIME	SAMPLE CONTAINER		PRESERVATION	MINIMUM REPORTING LIMIT
			BOTTLE TYPE	SIZE/SET		
Calcium	SM 2340C or SM3500Ca-D	6 Months	Plastic	1 Liter	HNO3, cool to 4 ^{o}C	1.0 mg/L
Magnesium	EPA 200.7 or SM3500Mg-E	6 Months	Plastic	1 Liter	HNO3, cool to 4 ^{o}C	1.0 mg/L
Sodium	EPA 200.7 or SM3111B	6 Months	Plastic	1 Liter	HNO3, cool to 4 ^{o}C	1.0 mg/L
Potassium	EPA 200.7	6 Months	Plastic	1 Liter	Cool to 4 ^{o}C	1.0 mg/L
Bicarbonate	SM 2320-B	14 Days	Plastic or Glass	250 mL	Cool to 4 ^{o}C	1.0 mg/L
Sulfate	EPA 300.0	28 Days	Plastic or Glass	250 mL	Cool to 4 ^{o}C	0.50 mg/L
Chloride	EPA 300.0	28 Days	Plastic or Glass	250 mL	Cool to 4 ^{o}C	1.0 mg/L
Nitrate, (Nitrate as NO3)	EPA 300.0	48 Hours	Plastic or Glass	250 mL	Cool to 4 ^{o}C	2.0 mg/L
pH	EPA 150.1	Immediate	Plastic	250 mL	None Required	None Required
Total Dissolved Solids (TDS)	SM 2450-C	7 Days	Plastic	250 mL	Cool to 4 ^{o}C	1.0 mg/L
Specific Conductance (EC)	SM 2510-B	28 Days	Plastic or Glass	250 mL	Cool to 4 ^{o}C	10 umhos/cm

Table 15: Example Chain of Custody Form

Caltest
ANALYTICAL LABORATORY

1885 N. KELLY ROAD NAPA, CA 94558 (707) 258-4000 FAX (707) 226-1001

PAGE 1 OF 1

SAMPLE CHAIN OF CUSTODY

PROJECT NAME / PROJECT NUMBER:

P.O. NUMBER

LAB ORDER #

CLIENT:

REPORT TO:

ANALYSES REQUESTED

MAILING ADDRESS:

STATE:

ZIP

BILLING ADDRESS:

ATTN:

PHONE NUMBER:

FAX PHONE NUMBER:

SAMPLER (PRINT & SIGN NAME):

TURN-AROUND TIME

☐ STANDARD

☐ RUSH

DUE DATE:

CALTEST LAB #	DATE SAMPLED	TIME SAMPLED	SAMPLE MATRIX*	CONTAINER TYPE/ AMOUNT**	PRESERVATIVE	SAMPLE IDENTIFICATION / SITE	CLIENT LAB #	COMP. or GRAB											REMARKS

WHITE - LABORATORY YELLOW - CLIENT COPY TO ACCOMPANY FINAL REPORT PINK - CLIENT COPY AS RECEIPT

RELINQUISHED BY	DATE/TIME	RECEIVED BY	RELINQUISHED BY	DATE/TIME	RECEIVED BY
	/			/	
	/			/	

FOR LAB USE ONLY

Samples: WC ____ MICRO ____ BIO ____ AA ____ SV ____ VOA ____ pH? Y/N TEMP: SEALED: Y/N INTACT: Y/N

BD: BIO ____ WC ____ AA ____

CC: AA ____ SV ____ VOA ____

SIL: HP ____ PT ____ QT ____ VOA ____

W/HNO_3 ____ H_2SO_4 ____ NaOH ____

PIL: HNO_3 ____ H_2SO_4 ____ NaOH ____ HCL ____

COMMENTS:

***MATRIX:** AQ = Aqueous Nondrinking Water, Digested Metals; FE = Low R.L.s, Aqueous Nondrinking Water, Digested Metals; DW = Drinking Water; SL = Soil Sludge, Solid ; FP = Free Product

****CONTAINER TYPES:** AL = Amber Liter; AHL = 500 ml Amber; PT = Pint (Plastic); QT = Quart (Plastic); HG = Half Gallon (Plastic); SJ = Soil Jar; B4 = 4oz. BACT; BT = Brass Tube; VOA = 40mL VOA; OTC - Other Type Container

R ____ PR ____ M ____ F ____

10/04/04

Appendix A

Wells in the Modesto Subbasin Providing Water Quality Data

Well #	Yr. Drilled	Drilled Depth	Top of Casing	Bottom of Casing	Casing Type	Blank or Perf ?	Sanitary Seal
		(ft)	(ft)	(ft)			
01S07E01J001M							
01S07E02J001M							
01S07E03D001M							
01S07E05A001M							
01S07E06M002M							
01S07E08J002M							
01S07E09Q001M							
01S07E10A001M							
01S07E10A001M							
01S07E10A001M							
01S07E10A001M							
01S07E10A001M							
01S07E10A001M							
01S07E12H001M							
01S07E13J001M							
01S07E14M001M							
01S07E14P003M							
01S07E15F002M							
01S07E17N002M							
01S07E18L001M							
01S07E21G001M							
01S07E25E001M							
01S07E25R001M							
01S07E26G001M							
01S07E27K001M							
01S07E28D001M							
01S07E30R001M							
01S07E33H001M							
01S07E36D001M							
01S08E04R001M							
01S08E05A001M							
01S08E05R001M							
01S08E06D001M							
01S08E08J001M							
01S08E08J001M							
01S08E08J001M							
01S08E08J001M							
01S08E08J001M							
01S08E08J001M							
01S08E09Q001M							
01S08E11F001M							
01S08E14B001M							
01S08E15A001M							
01S08E15P001M							
01S08E25Q001M							
01S08E27A001M							
01S08E29K001M							
01S08E30C002M							
01S08E34Q001M							
01S08E35R002M							
01S09E02R001M							
01S09E05H002M							
01S09E07A001M							
01S09E07N001M							
01S09E11J001M							
01S09E11J002M							
01S09E13K001M							
01S09E14K001M							
01S09E14K001M							
01S09E14K001M							
01S09E14K001M							
01S09E14K001M							
01S09E14K001M							
01S09E15P001M							
01S09E16R001M							
01S09E18R003M							
01S09E19Q002M							
01S09E21J001M							
01S09E21J002M							
01S09E22L001M							
01S09E23A001M							
01S09E24R001M							
01S09E26A001M							
01S09E28M002M							
01S09E29M002M							

Well #	Yr. Drilled	Drilled Depth (ft)	Top of Casing (ft)	Bottom of Casing (ft)	Casing Type	Blank or Perf ?	Sanitary Seal
01S09E33J002M							
01S09E33P001M							
01S09E34A001M							
01S10E04C001M							
01S10E06Q001M							
01S10E08L001M							
01S10E16Q001M							
01S10E17L001M							
01S10E18M001M							
01S10E20G001M							
01S10E21A001M							
01S10E22Q001M							
01S10E23H001M							
01S10E23J001M							
01S10E26J001M							
01S10E27Q001M							
01S10E28J001M							
01S10E33J001M							
01S10E34R001M							
01S10E35F001M							
01S11E25N001M							
02S06E25J001M							
02S07E07D002M							
02S07E07Q001M							
02S07E08R001M							
02S07E09M001M							
02S07E10B002M							
02S07E11N002M							
02S07E12G001M							
02S07E12R001M							
02S07E12R001M							
02S07E12R001M							
02S07E12R001M							
02S07E12R001M							
02S07E12R001M							
02S07E12R002M							
02S07E12R002M							
02S07E12R002M							
02S07E12R002M							
02S07E12R002M							
02S07E12R002M							
02S07E19H001M							
02S07E20R002M							
02S07E22N002M							
02S07E24R002M							
02S07E26B001M							
02S07E31N001M							
02S08E04M001M							
02S08E06J001M							
02S08E07R001M							
02S08E08A001M							
02S08E08E001M							
02S08E09J001M							
02S08E12D001M							
02S08E14E001M							
02S08E17N002M							
02S09E03K001M							
02S09E05C001M							
02S09E07D001M							
02S09E09Q001M							
02S09E11K001M							
02S09E12R001M							
02S09E19B002M							
02S09E19B002M							
02S09E19B002M							
02S09E19B002M							
02S09E19B002M							
02S09E19B002M							
02S10E08H001M							
02S10E09E001M							
03S07E05J001M							
03S07E06Q001M							
02S10E01E001M							
02S10E02C001M							

Well #	Yr. Drilled	Drilled Depth (ft)	Top of Casing (ft)	Bottom of Casing (ft)	Casing Type	Blank or Perf ?	Sanitary Seal
02S10E02P001M							
02S10E10M002M							
02S10E22A001M							
02S10E22D001M							
02S10E23R001M							
02S10E24R001M							
02S10E25J001M							
02S10E26N001M							
02S10E27H001M							
02S10E28E001M	log available						
02S10E29B001M							
02S10E31C002M							
02S10E34M002M							
02S10E35M001M	no log available						
02S10E36A001M							
02S11E07J001M							
02S11E19K002M							
02S11E20N001M							
02S11E28J001M							
02S11E29M001M							
02S11E30C001M							
02S11E30M001M							
02S11E31N001M							
02S11E32H001M							
02S12E32P001M							
03S08E11K001M							
03S08E13C001M							
03S08E13J001M							
03S08E24K001M							
03S08E25J001M							
03S09E05J003M							
03S09E07C002M							
03S09E08K001M							
03S09E10E001M							
03S09E10M001M							
03S09E10P001M							
03S09E14G001M							
03S09E15L001M							
03S09E16D001M							
03S09E16N002M							
03S09E17D001M							
03S09E17P001M							
03S09E19C001M							
03S09E19E001M							
03S09E20C001M							
03S09E20J001M							
03S09E20K001M							
03S09E21H001M							
03S09E22F001M							
03S09E22N001M							
03S09E23E001M							
03S09E24F001M							
03S09E24M001M							
03S09E25D001M							
03S09E26K001M							
03S09E26M001M							
03S09E27D001M							
03S09E28C001M							
03S09E28J001M							
03S09E28K001M							
03S09E28M001M							
03S09E29B001M							
03S09E29D002M							
03S09E29G001M							
03S09E29P001M							
03S09E30E001M							
03S09E30Q001M							
03S09E31G001M							
03S09E32A001M							
03S09E32G001M							
03S09E33Q001M							
03S09E34A001M							
03S09E35A001M							
03S09E36C001M							

Well #	Yr. Drilled	Drilled Depth (ft)	Top of Casing (ft)	Bottom of Casing (ft)	Casing Type	Blank or Perf ?	Sanitary Seal
03S09E36C002M							
03S09E36D001M							
03S10E01J001M							
03S10E02D001M							
03S10E04A001M							
03S10E05L001M							
03S10E06B001M							
03S10E09J001M							
03S10E11D001M							
03S10E12L001M							
03S10E13C001M							
03S10E14A001M							
03S10E15A001M							
03S10E15Q001M							
03S10E16A001M							
03S10E19E001M							
03S10E20F001M							
03S10E20R001M							
03S10E22G001M							
03S10E26E001M							
03S10E30H001M							
03S10E30R002M							
03S10E31F001M							
03S10E31J001M							
03S10E31K001M							
03S10E34D002M							
03S11E06C001M							
03S11E07C001M							
03S11E18D001M							
03S11E19C001M							
03S11E27L001M							
03S11E28M001M							
03S11E31K001M							
03S11E34C003M							
03S11E34N001M							
03S12E05C002M							
04S08E01C002M							
03S12E33L001M							
04S08E13P001M							
04S08E22R001M							
04S08E27H001M							
04S08E35J001M							
04S08E36B002M							
04S09E03M001M							
04S09E04K001M							
04S09E04N002M							
04S09E05H001M							
04S09E05J001M							
04S09E09Q001M							
04S09E16D002M							
04S09E19A001M							
04S09E20A001M							
04S09E21A001M							
04S09E21J001M							
04S09E22C001M							
04S09E22L001M							
04S09E24G001M							
04S09E27H001M							
04S09E28J001M							
04S09E29M001M							
04S09E30Q001M							
04S09E31C001M							
04S09E32J001M							
04S09E33E001M							
04S09E36E002M							
04S10E02M001M							
04S10E08H001M							
04S10E11J001M							
04S10E12A001M							
04S10E18R001M							
04S10E21E001M							
04S10E21R002M							
04S10E24B001M							
04S10E29B001M							

Well #	Yr. Drilled	Drilled Depth (ft)	Top of Casing (ft)	Bottom of Casing (ft)	Casing Type	Blank or Perf ?	Sanitary Seal
04S10E31B001M							
04S10E32N002M							
04S11E03H001M							
04S11E08A001M							
04S11E11H001M							
04S11E14P001M							
04S11E15J001M							
04S11E17A001M							
04S11E21D001M							
04S11E24Q001M							
04S11E24Q001M							
04S11E28J001M							
04S11E28J001M							
04S11E31J001M							
04S11E32D002M							
04S11E32D002M							
04S11E33R001M							
04S11E33R001M							
04S11E35A001M							
04S11E36N001M							
04S12E03C001M							
04S12E03G001M							
04S12E06E001M							
04S12E06G001M							
04S12E07C001M							
04S12E07J001M							
04S12E08E001M							
04S12E08G001M							
04S12E09M001M							
04S12E16E001M							
04S12E17D001M							
04S12E17G001M							
04S12E18C001M							
04S12E19N001M							
04S12E21N001M							
04S12E27J001M							
04S12E30Q001M							
04S12E34F001M							
04S12E35C001M							
04S13E28B001M							
04S13E28K001M							
04S13E28Q001M							

Appendix E

Public Involvement Documentation

DECLARATION OF PUBLICATION
(C.C.P. S2015.5)

COUNTY OF STANISLAUS
STATE OF CALIFORNIA

I am a citizen of the United States and a resident Of the County aforesaid; I am over the age of Eighteen years, and not a party to or interested In the above entitle matter. I am the printer And Principal clerk of the publisher **of THE MODESTO BEE**, printed and Published in the **City of MODESTO,** County Of **STANISLAUS,** State of California, daily, For which said newspaper has been adjudged a Newspaper of general circulation by the Superior Court of the County of **STANISLAUS,** State of California, under the date of **February 25, 1951, Action No. 46453;** that the notice of which the annexed is a printed copy, has been published in each issue thereof on the following dates, to wit:

AUGUST 26, 2004

I certify (or declare) under penalty of perjury That the foregoing is true and correct and that This declaration was executed at **MODESTO,** California on

AUGUST 26, 2004

Estella Jimenez
(Signature)

Notice of Public Hearing

Notice is hereby given that the Stanislaus and Tuolumne Rivers Groundwater Basin Association has formed a Regional Water Management Group with the intention to prepare an integrated regional water management plan. The Regional Water Management Group will hold a public hearing on September 7, 2004 to decide whether to prepare this integrated regional water management plan for the Modesto Basin. Interested parties are encouraged to participate in this hearing.

The Regional Water Management Group may address issues related to groundwater management planning, planning for water conservation and recycling, measures to protect groundwater resources, conjunctive management of surface and groundwater resources, integration of resources, and other water management planning of the basin.

The public hearing will be held on September 2, 2004 at 2 p.m. at Modesto Irrigation District, 1231 Eleventh Street, Modesto, CA. Written communications with the Regional Water Management Group and/or the Association should be addressed to Mr. Walter Ward, Chair of the Stanislaus and Tuolumne River Groundwater Basin Association, Modesto Irrigation District, PO Box 4060, Modesto, CA, 95352-4060.

AUGUST 26, 2004

PROOF OF PUBLICATION

(2015.5 C. C. P.)

This space is for the County Clerk's Filing Stamp

STATE OF CALIFORNIA,

County of Stanislaus

I am a citizen of the United States and a resident of the county aforesaid; I am over the age of twenty-one years, and not a party to or interested in the above entitled matter. I am the principal clerk of THE OAKDALE LEADER, 122 South Third Avenue, Oakdale, California, a newspaper of general circulation, published in Oakdale, California in the City of Oakdale, County of Stanislaus, and which newspaper has been adjudged a newspaper of general circulation, by the Superior Court of the County of Stanislaus, State of California. That the notice, of which the annexed is a printed copy (set in type not smaller than nonpareil), has been published in each regular and entire issue of said newspaper and not in any supplement thereof on the following dates, to-wit:

March 31st

all in the year 2004 , _____.

I certify or declare) under penalty of perjury that the foregoing is true and correct.

Dated at Oakdale, _____

California, this 31st day of March , 2004

Signature

Proof of Publication of

Oakdale Irrigation District

Public Notice

PUBLIC NOTICE

PUBLIC NOTICE

Notice is hereby given that the Oakdale Irrigation District intends to work with other members of the Stanislaus and Tuolumne Rivers Groundwater Basin Association to develop an integrated regional groundwater management plan for the Modesto Sub-basin pursuant to part 2.75 (commencing with section 10750), and part 2.2 (commencing with section 10530) of Division 6 of the California Water Code. The Board of Directors of the Oakdale Irrigation District will hold a public hearing on April 6, 2004 at 9:00 am, in the District Board Room located at 1205 East F Street, Oakdale, Ca. 95361, to determine whether to prepare an integrated regional groundwater management plan and to brief the public and interested parties about the planning process. The District intends to join other Association members to form a "Regional Water Management Group" in accordance to the Integrated Regional Water Management Planning Act of 2002. The Board of Directors of the Oakdale Irrigation District invites and encourages interested parties to participate in this public hearing.

Mar. 31, 2004

PROOF OF PUBLICATION

(2015.5 C. C. P.)

This space is for the County Clerk's Filing Stamp

STATE OF CALIFORNIA,

County of Stanislaus

I am a citizen of the United States and a resident of the county aforesaid; I am over the age of twenty-one years, and not a party to or interested in the above entitled matter. I am the principal clerk of THE OAKDALE LEADER, 122 South Third Avenue, Oakdale, California, a newspaper of general circulation, published in Oakdale, California in the City of Oakdale, County of Stanislaus, and which newspaper has been adjudged a newspaper of general circulation, by the Superior Court of the County of Stanislaus, State of California. That the notice, of which the annexed is a printed copy (set in type not smaller than nonpareil), has been published in each regular and entire issue of said newspaper and not in any supplement thereof on the following dates, to-wit:

APRIL 28th

all in the year 2004 , _____.

I certify or declare) under penalty of perjury that the foregoing is true and correct.

Dated at Oakdale, _____

California, this 28th day of April , 2004

Signature

Proof of Publication

Oakdale Irrigation District

Adopt Resolution & Direct Staff

PUBLIC NOTICE

PUBLIC NOTICE

Notice is hereby given that on April 6, 2004, the Board of Directors of the Oakdale Irrigation District adopted a resolution and directed staff to work cooperatively with other members of the Stanislaus and Tuolumne Rivers Groundwater Basin Association to draft an Integrated Regional Groundwater Management Plan for the Modesto Groundwater Basin, which will include the entire service area of the Oakdale Irrigation District. Interested parties are encouraged to participate in this planning process.

The manner in which interested parties can participate in the planning process may include (1) attending public hearings conducted by the Oakdale Irrigation District Board of Directors to discuss groundwater management issues (such public hearings are conducted during regular meetings of the Board of Directors); (2) attending monthly public meetings scheduled throughout the planning process by the Stanislaus and Tuolumne Rivers Groundwater Basin Association (meetings are generally scheduled for the first Thursday of each month at 3 p.m. at Modesto Irrigation District); (3) requesting a draft of the plan when it becomes available and providing written comments to the District and/or the Association at the addresses below; (4) providing written comments throughout the planning process to the Association and; (5) attending the Association's public hearings, which will be announced in the newspaper, and are intended to receive comments on the draft of the plan.

The first Association meetin to discuss the groundwate management issues scheduled for May 13, 200 at 3 p.m. at Modesto Irrigatic District, 1231 Eleven Street, Modesto, CA. Writte communications with the Distri should be addressed to M Steve Knell, General Manag Oakdale Irrigation District, 12 East F Street, Oakdale, C 95361. Written communicati with the Association should addressed to Mr. Walter Wa Chair of the Stanislaus a Tuolumne River Groundwa Basin Association, Mode Irrigation District, 1231 Eleve Street, Modesto, CA, 95354.

Apr. 28, 2004

DECLARATION OF PUBLICATION
(C.C.P. S2015.5)

COUNTY OF STANISLAUS
STATE OF CALIFORNIA

I am a citizen of the United States and a resident Of the County aforesaid; I am over the age of Eighteen years, and not a party to or interested In the above entitle matter. I am the printer And Principal clerk of the publisher **of THE MODESTO BEE**, printed and Published in the **City of MODESTO,** County Of **STANISLAUS,** State of California, daily, For which said newspaper has been adjudged a Newspaper of general circulation by the Superior Court of the County of **STANISLAUS,** State of California, under the date of **February 25, 1951, Action No. 46453;** that the notice of which the annexed is a printed copy, has been published in each issue thereof on the following dates, to wit:

MARCH 17, 2004

I certify (or declare) under penalty of perjury That the foregoing is true and correct and that This declaration was executed at **MODESTO,** California on

MARCH 17, 2004

Cynthia Ortega
(Signature)

MID Public Hearing

The Modesto Irrigation District Board of Directors will hold a public hearing on Tuesday, March 23, during its 9 a.m. meeting to determine whether to prepare an integrated regional groundwater management plan. At that time the public and interested parties will be briefed about the planning process. The Stanislaus and Tuolumne Rivers Groundwater Basin Association plan on developing an integrated regional groundwater management plan for the Modesto Sub-basin pursuant to part 2.75 (commencing with section 10750), and part 2.2 (commencing with section 10530) of Division 6 of the California Water Code. Association members intend to form a "Regional Water Management Group" in accordance to the Integrated Regional Water Management Planning Act of 2002. Interested parties are invited to participate in the public hearing. The Board meeting will be held in the MID Board Room, 1231 11th Street, Modesto.
MARCH 17, 2004

2nd Affidavit
DECLARATION OF PUBLICATION
(C.C.P. S2015.5)

COUNTY OF STANISLAUS
STATE OF CALIFORNIA

I am a citizen of the United States and a resident Of the County aforesaid; I am over the age of Eighteen years, and not a party to or interested In the above entitle matter. I am the printer And Principal clerk of the publisher **of THE MODESTO BEE**, printed and Published in the **City of MODESTO,** County Of **STANISLAUS,** State of California, daily, For which said newspaper has been adjudged a Newspaper of general circulation by the Superior Court of the County of **STANISLAUS,** State of California, under the date of **February 25, 1951, Action No. 46453;** that the notice of which the annexed is a printed copy, has been published in each issue thereof on the following dates, to wit:

APRIL 1, 2004

I certify (or declare) under penalty of perjury That the foregoing is true and correct and that This declaration was executed at **MODESTO,** California on

APRIL1, 2004

Esther Jimenez
(Signature)

MID Public Notice

Notice is hereby given that the Modesto Irrigation District (MID) Board of Directors adopted a resolution and directed staff to work cooperatively with other members of the Stanislaus and Tuolumne Rivers Groundwater Basin Association (Association) to draft an Integrated Regional Groundwater Management Plan for the Modesto Groundwater Basin. Interested parties are encouraged to participate in this planning process.The manner in which interested parties can participate in the planning process may include (1) attending public hearings conducted by the MID Board to discuss groundwater management issues (such public hearings are conducted during regular Board meetings when updates to the Board are necessary); (2) attending monthly public meetings scheduled throughout the planning process by the Association (meetings are generally scheduled for the first Thursday of each month at 3 p.m. at MID unless otherwise noted); (3) requesting a draft of the plan when it becomes available and providing written comments to MID and/or the Association at the address below; (4) providing written comments throughout the planning process to the Association and; (5) attending the Association's public hearings, which will be announced in the newspaper, and are intended to receive comments on the draft of the plan.The first Association meeting is scheduled for May 13, 2004 at 3 p.m. at MID, 1231 11th Street, Modesto. Written communications with MID and/or Association should be addressed to Walter Ward, Chair of the Stanislaus and Tuolumne River Groundwater Basin Association, MID, PO Box 4060, Modesto, CA 95352-4060.
APRIL 1, 2004

DECLARATION OF PUBLICATION
(C.C.P. §2015.5)

COUNTY OF STANISLAUS
STATE OF CALIFORNIA

I am a citizen of the United States and a resident Of the County aforesaid; I am over the age of Eighteen years, and not a party to or interested In the above entitle matter. I am the printer And Principal clerk of the publisher **of THE MODESTO BEE**, printed and Published in the **City of MODESTO,** County Of **STANISLAUS,** State of California, daily, For which said newspaper has been adjudged a Newspaper of general circulation by the Superior Court of the County of **STANISLAUS,** State of California, under the date of **February 25, 1951, Action No. 46453;** that the notice of which the annexed is a printed copy, has been published in each issue thereof on the following dates, to wit:

JANUARY 17, 2004

I certify (or declare) under penalty of perjury That the foregoing is true and correct and that This declaration was executed at **MODESTO,** California on

JANUARY 17, 2004

Esther Jimenez
(Signature)

PUBLIC NOTICE
January 27, 2004

Notice is hereby given that the City of Modesto will hold a hearing to consider development of two groundwater management plans which the City overlies: 1) the Stanislaus and Tuolumne Rivers' Groundwater Basin and 2) the Turlock Groundwater Basin. The hearing will be an opportunity for the public to provide input in this process. At the conclusion of the hearing, the City Council may consider adopting a resolution of intention to draft a groundwater management plan. Should the City Council adopt such a resolution, there will be additional opportunity to provide comment on the plan as it is developed, and prior to the City Council adopting the plan.

Notice is hereby further given that the public hearing will be held in Tenth Street Place, 1010 Tenth Street, Modesto, Stanislaus County, California on the 27th of January, 2004, at 5:30 p.m. All interested persons are asked to attend. At the public hearing, the City Council shall gather comments and suggestions from the public regarding the intent to draft a groundwater management plan.

JANUARY 17, 2004

April 30, 2005
Modesto Bee

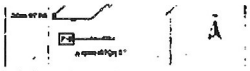

Section 2. This ordinance shall take effect and be in full force thirty (30) days from and after the date of its passage and before the expiration of fifteen (15) days after its passage it shall be published once, with the names of the members voting for and against same, in the Modesto Bee, a newspaper of general circulation published in Stanislaus County, State of California

Upon motion of Supervisor Mayfield, seconded by Supervisor Simon, the foregoing ordinance was passed and adopted at a regular meeting of the Board of Supervisors of the County of Stanislaus, State of California, this 19th day of April, 2005, by the following called vote:

AYES: Supervisors: O'Brien, Mayfield, Simon, DeMartini, and Chairman Grover
NOES: Supervisors: None
ABSENT: Supervisors: None
ABSTAINING: Supervisors: None

s/s J. Grover
CHAIRMAN OF THE BOARD OF SUPERVISORS of the County of Stanislaus, State of California

ATTEST: CHRISTINE FERRARO TALLMAN, Clerk of the Board of Supervisors of the County of Stanislaus, State of California

By: s/s Susan E. Seibert, Deputy Clerk of the Board

ORDINANCE NO. C.S. - 917

AN ORDINANCE ADOPTING SECTIONAL DISTRICT MAP NO. 9-110.964 FOR THE PURPOSE OF REZONING A 13.1-ACRE PROPERTY FROM AGRICULTURE TO PLANNED DEVELOPMENT (PD) ZONING FOR PARKING AND STORAGE OF TRUCKS, RECREATIONAL VEHICLES, AND EQUIPMENT AND REMODEL THREE EXISTING BUILDINGS FOR OFFICE USE, WAREHOUSING AND STORAGE LOCATED ON GOLDEN STATE BOULEVARD, TURLOCK. APN: 044-031-004 AND 044-031-005.

The Board of Supervisors of the County of Stanislaus, State of California, ordains as follows

Section 1. Sectional District Map No. 9-110.964 is adopted for the purpose of designating and indicating the location and boundaries of a District, such map to appear as follows:

SECTIONAL DISTRICT MAP NO. 9-110.964

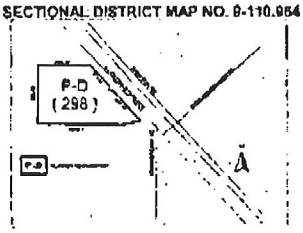

Section 2. This ordinance shall take effect and be in full force thirty (30) days from and after the date of its passage and before the expiration of fifteen (15) days after its passage it shall be published once, with the names of the members voting for and against same, in the Modesto Bee, a newspaper of general circulation published in Stanislaus County, State of California.

Upon motion of Supervisor Mayfield, seconded by Supervisor O'Brien, the foregoing ordinance was passed and adopted at a regular meeting of the Board of Supervisors of the County of Stanislaus, State of California, this 19th day of April, 2005, by the following called vote:

AYES: Supervisors: O'Brien, Mayfield, Simon, DeMartini, and Chairman Grover

NOES: Supervisors: None

ABSENT: Supervisors: None

ABSTAINING: Supervisors: None

J. Grover CHAIRMAN OF THE BOARD OF SUPERVISORS of the County of Stanislaus, State of California

ATTEST: CHRISTINE FERRARO TALLMAN, Clerk of the Board of Supervisors of the County of Stanislaus, State of California

By: Susan E. Seibert, Deputy Clerk of the Board

ness Name Statement must be filed before that time. The filing of this Statement does not of itself authorize the use in this State of a Fictitious Business name in violation of the rights of another under Federal, State, or Common Law (See Section 14411 et seq., Business and Profession Code).
APRIL 9, 16, 23, 30, 2005

FICTITIOUS BUSINESS NAME STATEMENT
FILE NO. 05 0756

The following person is doing business as:
PRINS DAIRY 6001 MILNES ROAD MODESTO CA 95357

John Virgil Prins, Trustee of The Prins Family Trust 6453 Milnes Road Modesto, CA 95357
Kevin J. Prins 6001 Milnes Road Modesto, CA 95357
Lori A Prins 6001 Milnes Road Modesto, CA 95357
Marlorie Jean Prins, Trustee of The Prins Family Trust 6453 Milnes Road Modesto, CA 95357

This business is conducted by:
a General Partnership

The registrant commenced to transact business under the fictitious business name or names listed above on 3-10-00

The type of business being conducted:
Dairy and Farming

I declare that all information in this statement is true and correct. (A registrant who declares as true information which he or she known to be false is guilty of a crime.)
/s/John Virgil Prins, Trustee
filed with the County Clerk of Stanislaus County on 05 MAR 16

NOTICE: This Fictitious Name Statement expires five years from the date it was filed in the office of the County Clerk. A new Fictitious Business Name Statement must be filed before that time. The filing of this Statement does not of itself authorize the use in this State of a Fictitious Business name in violation of the rights of another under Federal, State, or Common Law (See Section 14411 et seq., Business and Profession Code).
APRIL 16, 23, 30, MAY 7, 2005

FICTITIOUS BUSINESS NAME STATEMENT
FILE NO. 05-1048

The following person is doing business as:
BURTON PROPERTIES 1301 DOKER DRIVE, BUILDING B MODESTO CA 95351

The John R. Burton And Tammy L. Burton 2005 Trust 1301 Doker Drive, Bldg. B Modesto CA 95351
The Kenneth A. Burton and Deborah E. Burton 2005 Trust 1301 Doker Drive, Bldg B Modesto, CA 95351

This business is conducted by:
a General Partnership

The registrant commenced to transact business under the fictitious business name or names listed above on January 1, 2005

The type of business being conducted:
Real Estate Investments

I declare that all information in this statement is true and correct. (A registrant who declares as true information which he or she known to be false is guilty of a crime.)
/s/John R. Burton, Trustee
filed with the County Clerk of Stanislaus County on 05 APR 7

NOTICE: This Fictitious Name Statement expires five years from the date it was filed in the office of the County Clerk. A new Fictitious Business Name Statement must be filed before that time. The filing of this Statement does not of itself authorize the use in this State of a Fictitious Business name in violation of the rights of another under Federal, State, or Common Law (See Section 14411 et seq., Business and Profession Code).
APRIL 16, 23, 30, MAY 7, 2005

Modesto Groundwater Basin Integrated Regional Groundwater Management Plan

The Stanislaus and Tuolumne Rivers Groundwater Basin Regional Water Management Group will hold a May 12 public hearing on its draft Integrated Regional Groundwater Management Plan for the Modesto Groundwater Basin. The public hearing will be held at 2 p.m. May 12, Modesto Irrigation District (MID), 1231 11th Street, Modesto.

Copies of the draft plan are available: visit MID, 1231 11th St., Modesto, or call (209) 526-7571. Written comments must reach the group by 2 p.m. May 12. Address written comments to Walter Ward, Stanislaus and Tuolumne Rivers Groundwater Basin Regional Water Management Group, MID, PO Box 4060, Modesto, CA 95352-4060. The May 12 hearing is open to the public.
APRIL 30, 2005

of seq., Business and Profession Code).
APRIL 16, 23, 30, MAY 7, 2005

FICTITIOUS BUSINESS NAME STATEMEA
FILE NO. 05-1001

The following person is doing business as:
ENVIRO-MIST CARPET CLEANING CO.,
Pebble Lane, Modesto, ca 95355
KIM MICHAEL DINNELL, 1101 Pebble Le
Modesto, Ca 95355

This business is conducted by:
an individual.

The registrant commenced to transact busin under the fictitious business name or names li above on 4-4-05

The type of business being conducted:
carpet and upholstery cleaning.

I declare that all information in this statem is true and correct. (A registrant who declares true information which he or she known to be fa is guilty of a crime.)
/s/ Kim Michael Dinnell
Statement filed with the County Clerk of Stanisla County on 05 APR 4

NOTICE: This Fictitious Name Stateme expires five years from the date it was filed in t office of the County Clerk. A new Fictitious Bu ness Name Statement must be filed before th time. The filing of this Statement does not of itse authorize the use in this State of a Fictitious Bu ness name in violation of the rights of another und Federal, State, or Common Law (See Section 14 et seq., Business and Profession Code).
APRIL 23, 30, MAY 7, 14, 2005

LAKE DON PEDRO COMMUNITY SERVICES DISTRICT REQUEST FOR PROPOSALS INDEPENDENT AUDITOR SERVICES

NOTICE IS HEREBY GIVEN that the Lak Don Pedro Community Services District will re ceive sealed written Proposals for independent aud tor services for the District. The service area of th District is located between Lake Don Pedro an Lake McClure in unincorporated portions of Tuo umne and Mariposa Counties, California. Submitte Proposals shall provide for the District to maintai compliance with auditing standards generally ac cepted in the United States and the standards applic cable to financial audits contained in Governmen Auditing Standards, issued by the Comptroller Ge eral of the United States, Government Accounting Standards Board pronouncements as well as applic cable Financial Accounting Standards Board pro nouncements, the California State Controller's Mini mum Audit Requirement for California Special Districts, and the provisions of other standards, statutes, rules and regulations, as may be applica ble from time to time. The successful Respondent shall also provide a Statement of Net Assets by Activity, Statement of Revenues, Expenses and Changes in Fund Net Asset by Activity, a Statement of Cash Flows by Activity, and a Schedule of Revenues, Expenses and Changes in Fund Net Assets - Budget and Actual, and such other statements and reports as the Board of Directors of the District may from time to time require. Proposals shall include a form of draft contract between the District and the person or entity submitting the Proposal. The draft contract shall include, among other provisions, proposals for the cost of service. The contract for independent auditor services shall cover 3 (three) consecutive fiscal years commencing with fiscal year ending June 30, 2004.

Proposals must be submitted in a sealed envelope with the project name, "Lake Don Pedro Community Services District Independent Auditor Services," clearly marked on the outside together with the name and address of the person or entity making the Proposal. Proposals may be delivered or mailed to the District Office of the Lake Don Pedro Community Services District at 9751 Merced Falls Road, La Grange, California 95329. The closing date for receiving proposals shall be Tuesday, May 3, 2005 at 3.00 p.m.

DATED: April 25, 2005
LAKE DON PEDRO COMMUNITY SERVICES DISTRICT
By: BOB KENT, GENERAL MANAGER
APRIL 30, 2005

NOTICE OF PUBLIC HEARING

NOTICE IS HEREBY GIVEN that on May 10, 2005 at 9:25 a.m., or as soon thereafter as the matter may be heard, the Stanislaus County Board of Supervisors will meet in the Basement Chambers, Lower Level, 1010 10th St., Modesto, CA, to conduct a public hearing to consider the adoption of the Final Consolidated Plan Update and Annual Work Plan that includes the 2005-2006, $2,929,802.00 Housing and Urban Development Entitlement Grant Allocation, the $33,661

MAY. 27. 2005 1:52PM VODESTO BEE CLASSIFIED 209 578 2046

Appendix F

Resolutions of Plan Adoption

Stanislaus & Tuolumne Rivers Groundwater Basin Association

1231 11th Street • Modesto, CA 95354
Phone: (209) 526-7459 • Fax: (209) 526-7352
E-mail: WalterW@mid.org

Minutes of the September 2, 2004 Public Hearing

Introductions & Welcome

Walt Ward (Chairman) called the meeting to order at 2:00pm.
Introductions were made.
The following association members were present:

Garner Reynolds – City of Modesto
Will Wong – City of Modesto
Jack Bond – City of Modesto
Jim Alves – City of Modesto
Kathleen Acosta – City of Riverbank
Mike Niemi – MID
Walt Ward – MID
Kevin King – OID
Steve Knell – OID

The following consultants and other interested parties were present:

Naser Bateni – Bookman – Edmonston
Karen Burow – USGS
Steve Phillips – USGS
Jennifer Shelton – USGS

No members of the Public in attendance

Public Hearing Regarding the Preparation of a Regional Groundwater Plan

Walt Ward opened the agenda item for discussion and public comment. No public comments were received. OID made a motion for the Association to act as a Regional Water Management Group and as a Regional Water Management Group prepare an integrated, basin-wide groundwater management plan for the Modesto Sub-basin; the motion was seconded by the City of Riverbank and passed unanimously.

Closing

The Public Hearing was closed by Walt Ward @ 2:15pm September 2, 2004.

OAKDALE IRRIGATION DISTRICT
RESOLUTION NO. 2004-28

RESOLUTION APPROVING PARTICIPATION OF THE DISTRICT IN DEVELOPING AN INTEGRATED, REGIONAL GROUNDWATER MANAGEMENT PLAN FOR THE MODESTO GROUNDWATER SUB-BASIN

WHEREAS, the Oakdale Irrigation District has an obligation to work with other local agencies in developing an Integrated Regional Groundwater Management Plan pursuant to all of the terms and provisions of the Groundwater Management Planning Act of 2002 and the Integrated Regional Water Management Planning Act of 2002.

NOW, THEREFORE BE IT RESOLVED, by the Board of Directors of the Oakdale Irrigation District as follows:

1. That pursuant and subject to the terms and provisions of the Groundwater Management Planning Act of 2002 and the Integrated Regional Water Management Planning Act of 2002 that encourage local agencies to work cooperatively to manage groundwater resources and develop and adopt Integrated Regional plans within their jurisdictions, the Oakdale Irrigation District shall work cooperatively with other members of the Stanislaus and Tuolumne Rivers Groundwater Basin Association to prepare the Modesto Sub-basin Groundwater Management Plan to comply with provisions of the Groundwater Management Planning Act of 2002 and the Integrated Regional Water Management Planning Act of 2002.

2. Mr. Steve Knell, General Manager and Mr. Kevin King, Special Project Coordinator at the Oakdale Irrigation District, are hereby authorized and directed to participate with the representatives of other Association member agencies to form a "Regional Water Management Group" to prepare necessary data and documents, attend the Association and other public meetings and hearings to address groundwater management issues, and to prepare an Integrated, Regional Groundwater Management Plan for the Modesto Sub-basin.

Upon motion of Director Alpers, and seconded by Director Brichetto, and duly submitted to the Board for its consideration, the above resolution was adopted this 6th day of April 2004.

AYES: Alpers, Brichetto, Clark, Taro, and Webb
NOES: None

OAKDALE IRRIGATION DISTRICT

Frank B. Clark
President

Steve Knell, P.E.
General Manager / Secretary

I HEREBY CERTIFY that the foregoing is a true and correct copy of the original on file with the Oakdale Irrigation District.

OAKDALE IRRIGATION DISTRICT

Steve Knell, P.E.
General Manager/Secretary

City of Riverbank

Resolution 2004-060

A Resolution of the City Council of the City of Riverbank Approving the Participation of the City of Riverbank in Developing a Draft Integrated, Regional Ground Water Management Plan for the Modesto Groundwater Sub-Basin.

Now, Therefore, Be It Resolved by the City Council of City of Riverbank:

1. That pursuant and subject to all of the terms and provisions of the Groundwater Management Planning Act of 2002, and the Integrated Regional Water Management Planning Act of 2002 that encourage local agencies to work cooperatively to manage groundwater resources and prepare and adopt Integrated Regional plans within their jurisdictions, the City of Riverbank shall work cooperatively with other members of the Stanislaus and Tuolumne Rivers Groundwater Basin Association to draft the Modesto Sub-basin Groundwater Management Plan to comply with provisions of the Groundwater Management Planning Act of 2002 and the Integrated Regional Water Management Planning Act of 2002.

2. Mr. Jerry Meyer, Assistant Public Work Director of the City of Riverbank, is hereby authorized and directed to participate with representatives of other Association member agencies to form a "Regional Water Management Group" to prepare necessary data and documents, attend the Association and other public meetings and hearings to address groundwater management issues, and to prepare an integrated regional groundwater management plan for the Modesto sub-basin.

Passed and adopted by the City Council of the City of Riverbank at a regular meeting held on the 24th day of May 2004, by the following vote:

AYES: **Councilmembers Lineberger, McGinnis, Benitez, White, and Mayor O'Brien.**
NAYS: **None.**
ABSENT: **None.**
ABSTAIN: **None.**

Attest:

Emily Herrera
Deputy City Clerk

Approved:

William O'Brien
Mayor

RESOLUTION NO. 2004-45
AUTHORIZING MODESTO IRRIGATION DISTRICT'S PARTICIPATION IN A REGIONAL GROUNDWATER MANAGEMENT GROUP FOR PREPARATION OF AN INTEGRATED, REGIONAL GROUNDWATER MANAGEMENT PLAN FOR THE MODESTO GROUNDWATER SUB-BASIN

WHEREAS, in September 2001, the Board of Directors of the Modesto Irrigation District authorized the General Manager to execute the Memorandum of Understanding (MOU) Relating to the Formation and Operation of the Stanislaus and Tuolumne Rivers Groundwater Basin Association; and

WHEREAS, in September 2002, the State of California passed two laws, (SB 1938 and SB 1672), which encourage local agencies to work cooperatively in the preparation of integrated, regional groundwater management plans; and

WHEREAS, preparation and implementation of said plan will enable the Stanislaus and Tuolumne Rivers Groundwater Basin Association, and hence Modesto Irrigation District, to apply for funds and grants; and

WHEREAS, the preparation of the Integrated, Regional Groundwater Management Plan and the performance of certain studies made possible by above said funds, a better understanding and better management of the groundwater basin will be possible.

NOW, therefore, BE IT RESOLVED by the Board of Directors of the Modesto Irrigation District as follows:

1. That pursuant and subject to all of the terms and provisions of the Groundwater Management Planning Act of 2002, and the Integrated Regional Water Management Planning Act of 2002 that encourage local agencies to work cooperatively to manage groundwater resources and develop and adopt integrated regional plans within their jurisdictions, the Modesto Irrigation District shall work cooperatively with other members of the Stanislaus and Tuolumne Rivers Groundwater Basin Association to prepare the Modesto Sub-Basin Groundwater Management Plan to comply with provisions of the Groundwater Management Planning Act of 2002 and the Integrated Regional Water Management Planning Act of 2002.

2. The General Manager, or his designee, is authorized and directed to participate with representatives of other Association member agencies to form a "Regional Water Management Group" to prepare necessary data and documents, attend the Association and other public meetings and hearings to address groundwater management issues and to prepare an Integrated, Regional Groundwater Management Plan for the Modesto Groundwater Sub-Basin.

c: W. Ward
M. Niemi
file - Board
file - project

Moved by Director Hensley, seconded by Director Kidd, that the foregoing resolution be adopted.

The following vote was had:
Ayes: Directors Hensley, Kidd, Van Groningen and Warda
Noes: Directors None
Absent: Director Billington
The President declared the resolution adopted.

o0o

I, Vickie Ehrler, Secretary of the Board of Directors of the MODESTO IRRIGATION DISTRICT, do hereby CERTIFY that the foregoing is a full, true and correct copy of a resolution duly adopted at a special meeting of said Board of Directors held on the 23rd day of March 2004.

Secretary of the Board of Directors
of the Modesto Irrigation District

Stanislaus & Tuolumne Rivers Groundwater Basin Association

1231 11th Street • Modesto, CA 95354
Phone: (209) 526-7459 • Fax: (209) 526-7352
E-mail: WalterW@mid.org

Minutes of the May 12, 2005 Regional Water Management Group Meeting & Public Hearing

Introductions & Welcome

1. Walter Ward (Chairman) called the meeting to order at 2:05pm. Introductions were made.

   The following association members were present:
   - Jack Bond – City of Modesto
   - Doug Critchfield – City of Modesto
   - Garner Reynolds – City of Modesto
   - Will Wong – City of Modesto
   - John Word – City of Oakdale
   - Kathleen Acosta – City of Riverbank
   - Jerry Meyer – City of Riverbank
   - Michael Niemi – MID
   - Walt Ward – MID
   - Kevin King – OID
   - Steve Knell – OID
   - John Aud – Stanislaus County

   The following members of the public were present:
   - Chuck Deschenes – City of Waterford
   - Patrick Koepele – Tuolumne Trust

   The following consultants were present:
   - Naser Bateni – Bookman Edmonston

Public Hearing to Receive Comments on Integrated Regional Groundwater Management Plan and the Adoption of the Draft Integrated Regional Plan for the Modesto Sub-Basin

2. *Public Hearing*
   Discussion was lead by Walt Ward.
   a. Public Hearing opened at 2:10 pm

1231 11th Street • Modesto, CA 95354
Phone: (209) 526-7459 • Fax: (209) 526-7352
E-mail: WalterW@mid.org

b. Public was welcomed by Mr. Ward

c. Mr. Ward briefed the Public about the Plan

d. Received and discussed comment from the public. One comment was received from Patrick Koepele of the Tuolumne Trust. Mr. Koepele inquired about how the Plan addressed water quality issues. A discussion ensued and resulted in successfully satisfying Mr. Koepele's concerns. There were no other public comments.

3. *.Adoption of Plan*

a. Mr. Ward then opened the meeting for the Management Group to Discuss/Consider adoption of the Final Draft of the Integrated, Regional Groundwater Management Plan for the Modesto Sub-Basin. After briefly discussing remaining concerns Mr. Ward asked for a motion to adopt the Plan. Such a motion was made by Oakdale Irrigation District. Noting a general consensus among the Management Group the Chairman called for a vote.

The motion was unanimously approved thus adopting the Integrated Regional Groundwater Management Plan for the Modesto Sub-basin.

b. With no further items to discuss the Public Hearing was closed by the Chairman at 2:30 pm.

Closing

4. The meeting was closed by Walt Ward @ 2:31pm May 12, 2005.

PUBLIC HEARING

May 12, 2005
2:00 P.M. to 2:30 P.M.
Modesto Irrigation District
Conference Room 3A
1231 11th Street
Modesto, CA 95354

1. Topic: Introductions & Welcome
   Who: Walt Ward, MID
   Expected Outcome: Self-introductions

2. Topic: Public Hearing To Receive Comments on Integrated Regional Groundwater Management Plan and the Adoption of the Draft Integrated Regional Plan for the Modesto Sub-Basin

   Who: Regional Management Group of the Stanislaus & Tuolumne Rivers Groundwater Basin Association

   (a) Open Public Hearing
   (b) Welcome the Public
   (c) Brief the Public About the plan
   (d) Receive and Discuss Comments from the Public
   (e) Discussion/Consideration of Adoption of the Final Draft of the Integrated, Regional Groundwater Management Plan for the Modesto Sub-Basin
   (f) Close the Hearing

3. Adjourn

RESOLUTION NO. 2005-73
ADOPTING THE INTEGRATED, REGIONAL GROUNDWATER MANAGEMENT PLAN FOR THE MODESTO GROUNDWATER SUB-BASIN

WHEREAS, in September 2001, the Board of Directors of the Modesto Irrigation District authorized the General Manager to execute the Memorandum of Understanding (MOU) Relating to the Formation and Operation of the Stanislaus and Tuolumne Rivers Groundwater Basin Association; and

WHEREAS, in September 2002, the State of California passed two laws, (SB 1938 and SB 1672), which encourage local agencies to work cooperatively in the preparation of integrated, regional groundwater management plans; and

WHEREAS, adoption and implementation of said plan will enable the Stanislaus and Tuolumne Rivers Groundwater Basin Association, and hence Modesto Irrigation District, to apply for funds and grants; and

WHEREAS, the implementation of the Integrated, Regional Groundwater Management Plan and the performance of specific actions identified in the plan will enable a better understanding and management of the groundwater sub-basin will be possible.

NOW, therefore, BE IT RESOLVED by the Board of Directors of the Modesto Irrigation District that the INTEGRATED, REGIONAL GROUNDWATER MANAGEMENT PLAN FOR THE MODESTO GROUNDWATER SUB-BASIN is hereby accepted.

Moved by Director Van Groningen, seconded by Director Kidd, that the foregoing resolution be adopted.

The following vote was had:
Ayes: Directors Billington, Hensley, Kidd, Van Groningen and Warda
Noes: Directors None
Absent: Directors None
The President declared the resolution adopted.

o0o

I, Vickie Ehrler, Secretary of the Board of Directors of the MODESTO IRRIGATION DISTRICT, do hereby CERTIFY that the foregoing is a full, true and correct copy of a resolution duly adopted at a special meeting of said Board of Directors held on the 24th day of May 2005.

Secretary of the Board of Directors
of the Modesto Irrigation District

MODESTO CITY COUNCIL
RESOLUTION NO. 2004-061

RESOLUTION AUTHORIZING STAFF TO PARTICIPATE IN THE DEVELOPMENT OF GROUNDWATER MANAGEMENT PLANS AND AUTHORIZING THE INITIAL EXPENDITURE OF CURRENTLY BUDGETED FUNDS FOR THE DEVELOPMENT OF GROUNDWATER MANAGEMENT PLANS FOR BOTH OF THE TWO GROUNDWATER SUB-BASINS UNDERLYING THE CITY OF MODESTO, SPECIFICALLY, $50,000 FOR WORK RELATED TO THE MODESTO GROUNDWATER SUB-BASIN AND $50,000 FOR WORK RELATED TO THE TURLOCK GROUNDWATER SUB-BASIN

WHEREAS, the City of Modesto overlies two groundwater basins and is currently participating in two groundwater associations, the Stanislaus and Tuolumne Rivers' Groundwater Basin Association (STRGBA) and the Turlock Groundwater Basin Association (TGBA), to discuss groundwater issues within these respective basins, and

WHEREAS, the City of Modesto receives approximately 60% of its annual water supply from groundwater wells located throughout the City and has experienced a decline in groundwater quality at a number of well sites, which has resulted in those wells being taken out of service, and

WHEREAS, the California Legislature passed Assembly Bill (AB) 3030, which is designed to provide local public agencies increased management authority over their groundwater resources through the adoption of a Groundwater Management Plan (GMP), and

WHEREAS, Senate Bill (SB) 1938 expanded AB 3030 by requiring GMP's to include certain specific components in order to be eligible for grant funding for various types of groundwater related projects administered by the California Department of Water Resources (DWR), and

WHEREAS, both Groundwater Basin Associations are considering developing GMP's for the respective basins, according to the requirements of AB 3030 and SB1938, in order to be eligible for the DWR groundwater grants,

NOW, THEREFORE, BE IT RESOLVED by the Council of the City of Modesto that it hereby authorizes staff to continue working with both the STRGBA and the TGBA to develop City-wide Groundwater Management Plans.

BE IT FURTHER RESOLVED by the Council of the City of Modesto that it hereby authorizes the initial expenditure of currently budgeted funds for the development of groundwater management plans for both of the two groundwater sub-basins underlying the City of Modesto, specifically $50,000 for work related to the Modesto Groundwater sub-basin and $50,000 for work related to the Turlock Groundwater sub-basin.

The foregoing resolution was introduced at a regular meeting of the Council of the City of Modesto held on the 27th day of January, 2004, by Councilmember Jackman, who moved its adoption, which motion being duly seconded by Councilmember Dunbar, was upon roll call carried and the resolution adopted by the following vote:

AYES:	Councilmembers:	Dunbar, Hawn, Jackman, Keating, Marsh, O'Bryant, Mayor Ridenour
NOES:	Councilmembers:	None
ABSENT:	Councilmembers:	None

ATTEST: Jean Zahr
JEAN ZAHR, City Clerk

APPROVED AS TO FORM:
By
MICHAEL D. MILICH, City Attorney

NJB

RESOLUTION NO. 04.-- 117

RESOLUTION OF INTENTION BY THE OAKDALE CITY COUNCIL FOR APPROVING PARTICIPATION OF THE CITY IN DEVELOPING A DRAFT INTEGRATED, REGIONAL GROUNDWATER MANAGEMENT PLAN FOR THE MODESTO GROUNDWATER SUB-BASIN

BE IT RESOLVED by the Oakdale City Council as follows:

1. That pursuant and subject to all of the terms and provisions of the Groundwater Management Planning Act of 2002, and the Integrated Regional Water Management Planning Act of 2002 that encourage local agencies to work cooperatively to manage groundwater resources and prepare and adopt Integrated Regional plans within their jurisdictions, the City of Oakdale shall work cooperatively with other members of the Stanislaus and Tuolumne Rivers Groundwater Basin Association to draft the Modesto Sub-basin Groundwater Management Plan to comply with provisions of the Groundwater Management Planning Act of 2002 and the Integrated Regional Water Management Planning Act of 2002

2. Mr. John Word, Public Work Director of the City of Oakdale, is hereby authorized and directed to participate with representatives of other Association member agencies to form a "Regional Water Management Group" to prepare necessary data and documents, attend the Association and other public meetings and hearings to address groundwater management issues, and to prepare an integrated regional groundwater management plan for the Modesto subbasin.

PASSED AND ADOPTED by the City of Oakdale Council at the regular meeting of the Council on the 19 th day of July 2004 by the following vote:

AYES: KUHN, ROCKEY, SKAVDAHL

NOES: None

ABSENT: DEKLINSKI, JACKSON

Pat Kuhn

Pat Kuhn, *Mayor*

City of Oakdale

Bruce Bannerman, ~~Secretary~~ City Clerk