DRESSER®

Piping Specialties

Steel Products

for Water, Wastewater and Industrial Piping Systems

- Couplings
- Flange Adapters
- Expansion Joints
- Dismantling Joints
- Joint Harnesses
- Custom Fabrication

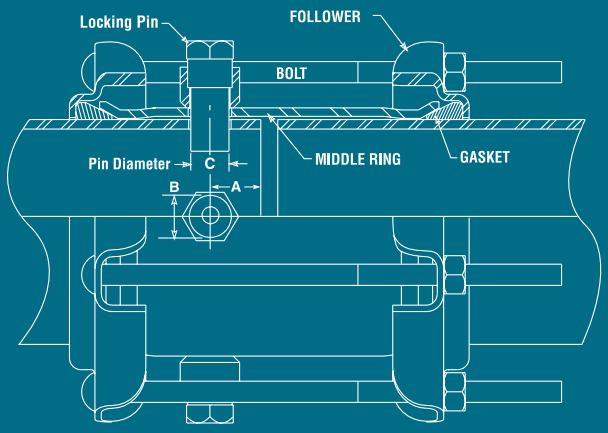

www.dresser.com

Piping Specialties
Bradford, PA

How to Specify/Order..... Page 2-3
Coupling Deflection Specifications.....Page 4

Dresser water market products you'll find in this catalog…

Regular Couplings.....Page 5-8
Insulating Couplings ..... Page 9
Long Body Couplings.....Page 10-11
Reducing Couplings .....Page 12-13
Line Caps .....Page 14
Lock Couplings.....Page 15
Flange Adapters.....Page 16
Expansion Joints.....Page 17
Dismantling Joints.....Page 18
Joint Harnesses.....Page 19
Modular Cast Couplings .....Page 20
Dresser Gaskets.....Inside Back Cover

Customer Service: 800-458-2398
Sales Fax: 800-362-9363
email: dmdsales@dresser.com

AL-CLAD™ Coating offered as standard

Dresser AL-CLAD fusion-bonded epoxy coating is offered as standard on the most common Dresser pipe joining products in the most popular sizes featured in this catalog.*

Tough, corrosion-resistant, factory-applied Dresser AL-CLAD coating has been developed through years of exhaustive testing and field application.

AL-CLAD epoxy coating is a fusion-bonded coating applied under rigidly controlled factory conditions and offers smoother flow in wetted waterways and provides protection against corrosive or aggressive conditions.

*Excludes Style 63 Expansion Joints where AL-CLAD coating is optional. Please consult factory for other products and sizes where AL-CLAD coating may be optional.

⚠WARNING

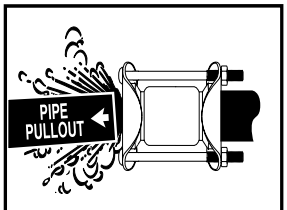

When pipe pullout could occur, pipe joint MUST be anchored. Failure to anchor pipe joint could result in escaping line content that could ignite and cause property damage, serious injury or death.

Why are DRESSER® couplings used more than any other coupling?

- Dresser offers the broadest line of couplings, including long body, insulating, reducing and transition types.
- Products feature Dresser AL-CLAD™ coating as standard in the most popular sizes. Our epoxy coating offers optimum protection against highly corrosive soil or aggressive water conditions and for handling brine, brackish water, most acids, alkalies, oil, chemical particulates and gases.
- Sizes range from 3/8" through 405" to cover every application including high temperature and abrasion.
- Dresser couplings are fast and easy to install with any size pipe or tubing.
- Wide temperature range from -20°F to +1200°F, with pressure ratings to 1500 psi.
- Available in rugged welded steel construction, stainless or carbon steel, titanium, monel or other alloys for special applications.
- Use a Dresser coupling and your pipeline joint is non-rigid, accepting expansion, contraction, vibration and line deflection.
- Special elastomer formulations are provided custom-matched to specific fluid process or application requirements.

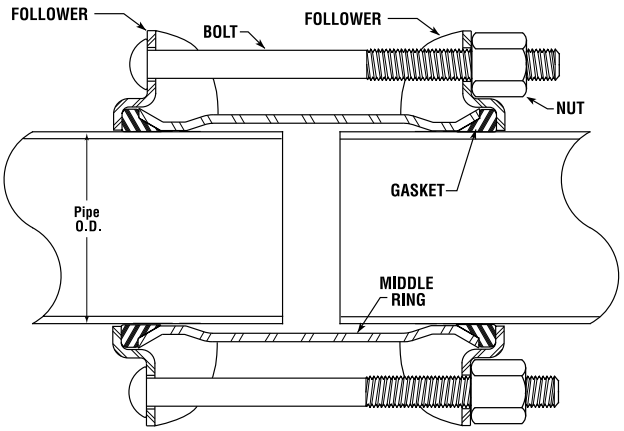

Cutaway view shows components of a basic Dresser Style 38 Coupling

The Basic Working Principle of Dresser Couplings...

The **Dresser** coupling consists of one cylindrical middle ring, two follower rings, two resilient gaskets of special Dresser compound, and a set of steel trackhead bolts. The middle ring has a conical flare at each end to receive the wedge portion of the gaskets. The follower rings confine the outer ends of the gaskets. As the nuts are tightened, the bolts draw the follower rings toward each other, compressing the gaskets in the spaces formed by follower rings, middle ring flares and pipe surface thus producing a flexible, leak-proof seal on the pipe joint.

Style 38, 38 Stainless & 138 Couplings
Page 5-8

Style 39 Insulating Couplings
Page 9

Style 40 Long Couplings
Page 10-11

Style 62 Reducing & Transition Couplings
Page 12-13

Style 31 Line Caps
Page 14

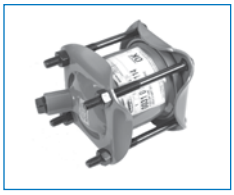

Style 167 Lock Coupling
Page 15

Style 128-W Flange Adapter
Page 16

Style 63 Expansion Joints
Page 17

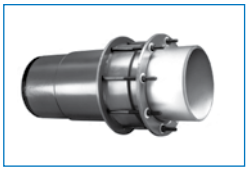

Style 131 Dismantling Joint
Page 18

Style 440 Joint Harness - Pg.19
Style 253 Cast Coupling - Pg.20

How to Specify Dresser Products

For those who may wish to draw up specifications of a general nature covering Dresser Style 38 couplings, this suggested form is offered:

1.) The pipe coupling shall be of a gasketed, sleeve-type design with diameter to properly fit the pipe. Each coupling shall consist of one (1) steel middle ring, of thickness and length specified, two (2) steel followers, two (2) rubber-compounded wedge section gaskets and sufficient track-head steel bolts to properly compress the gaskets.

The middle ring and followers of the coupling shall be true circular sections free from irregularities, flat spots or surface defects. They shall be formed from mill sections with the follower-ring section of such design as to provide confinement of the gasket. After welding, they shall be tested by cold expanding a minimum of 1% beyond the yield point. The middle ring, inside and out, and followers shall be coated with AL-CLAD™ thermosetting, fusion-bonded epoxy coating material that provides disbondment resistance in cathodically-protected systems and resistance to soil stresses and fungi. All constituents of the cured film are FDA and NSF-61 approved for exposure to fluids for human consumption and potable water.

The coupling bolts shall be of the elliptic-neck, track-head design with rolled threads. The manufacturer shall supply information as to the recommended torque to which the bolts shall be tightened. All bolt holes in the followers shall be oval for greater strength.

The coupling gaskets shall be composed of a crude or synthetic rubber base compounded with other products to produce a material that will not deteriorate from age, heat, or exposure to air under normal storage conditions. It shall also possess the quality of resilience and ability to resist cold flow of the material so that the joint will remain sealed and tight indefinitely when subjected to shock, vibration, pulsation and temperature or other adjustments of the pipeline.

2.) The couplings shall be assembled on the job in a manner to ensure permanently tight joints under all reasonable conditions of expansion, contraction, shifting and settlement, unavoidable variations in trench gradient, etc. The coupling shall be Dresser Style 38, as manufactured by Dresser Piping Specialties, Bradford, PA, and the necessary quantity shall be furnished.

When Ordering Dresser Expansion Joints

Inquiries or orders for Dresser Style 63 Expansion Joints should contain the following information:

(1) Quantity
(2) Type of pipe: ductile iron, steel, etc.
(3) Style number and type
(4) Service: Water, Industrial, etc.
(5) Maximum working pressure
(6) Amount of movement to be taken care of by each joint
(7) Temperature limitations and ranges
(8) Frequency of cycling;
(9) End preparation of slip or tail pipe—beveled for welding, flanged, other
(10) Remarks, unusual installations, and list support methods of line and joint

The proper type of expansion joint to use and the method of anchoring and connecting it into a line depend upon the conditions of service and type of installation, as well as other joints in the line. The most effective use of Style 63 expansion joints usually requires an engineering recommendation. For that reason, a complete description of the installation should be submitted, with sketches or working drawings, if possible. Special joints may also be made for unusual conditions.

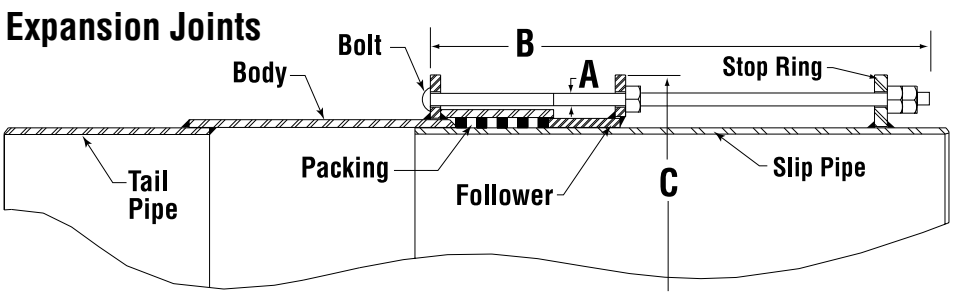

How to Specify Pipe Ends for Dresser Couplings

How to Specify Ends* on Steel Pipe

On orders and in specifications, the ends on steel pipe to be used with Dresser couplings may be specified briefly as follows:

• The pipe shall be furnished with plain ends for Dresser couplings in accordance with **A.W.W.A.** (American Water Works Association) Steel Water Pipe Specifications;

OR:

• The pipe shall be furnished with plain ends for Dresser couplings in accordance with A.P.I. (American Petroleum Institute) Line Pipe Specifications.

If specifications are to be detailed, the following may be used:

For Pipe Above 5" OD to 10-3/4" OD inclusive:

• The pipe shall be sufficiently free from indentations, projections or roll marks for a distance of 8" from the end of the pipe to make a tight joint with the rubber-gasket type of coupling. The outside diameter of the pipe shall not be more than 1/64" smaller than the nominal outside diameter for a distance of 8" from the end of the pipe and shall permit the passing for a distance of 8" of a ring gauge which has a bore 1/16" larger than the nominal outside diameter of the pipe. The minimum outside pipe diameter shall be determined by the use of a steel tape circumferentially applied to prevent the shipment of undersize, out-of-round pipe which, if measured diametrically through the maximum diameter or checked with a No-Go ring gauge, might appear within the specified tolerance.

For Pipe Larger than 10-3/4" OD:

• The pipe shall be sufficiently free from indentations, projections or roll marks for a distance of 8" from the end of the pipe to make a tight joint with the rubber-gasket type of coupling. The outside diameter of the pipe shall not be more than 1/32" smaller than the nominal outside diameter for a distance of 8" from the end of the pipe and shall permit the passing for a distance of 8" of a ring gauge which has a bore 3/32" larger than the nominal outside diameter of the pipe. The minimum outside pipe diameter shall be determined by the use of a steel tape circumferentially applied to prevent the shipment of undersize, out-of-round pipe which, if measured diametrically through the maximum diameter or checked with a No-Go ring gauge, might appear within the specified tolerance.

*While Dresser couplings require only plain-end pipe, other kinds of pipe ends (such as threaded, beveled or grooved) can be used if such pipe is already on hand.

How to Specify Ends on Cast/Ductile Iron Pipe

On orders and in specifications, the ends on cast or ductile iron pipe to be used with Dresser couplings may be specified briefly as follows:

• The pipe shall be furnished with plain ends for Dresser couplings in accordance with **A.W.W.A.** (American Water Works Association) specifications on tolerances;

OR:

• The pipe shall be furnished with plain ends for Dresser couplings in accordance with A.G.A. (American Gas Association) specifications on tolerances.

If further specifications are desired, the following may be added:

• The pipe shall be smooth and round for a distance of 8" from each end. The maximum plus or minus variation from nominal outside diameters for each size shall not exceed dimensions as shown in chart shown below.

• The maximum outside pipe diameter shall be such as to permit the passing of a ring gauge having an internal bore not greater than .01" larger than the maximum allowable outside diameter of the pipe. This ring gauge shall go over the end of the pipe for a distance of 8" for all sizes up to and including 24" and for a distance of 12" on sizes above 24".

• The minimum outside diameter shall be determined by use of a steel tape circumferentially applied to prevent the shipment of undersized, out-of-round pipe which, if measured diametrically through the maximum diameter or checked with a No-Go ring gauge, might appear within the specified tolerance.

Size	Maximum Variation
3" - 16"	.06"
18"- 24"	.08"
30"- 42"	.10"
48"	.12"
54"- 60"	.15"

Coupling Deflection, Movement, Expansion and Contraction

Laying out curves with standard Dresser couplings and straight sections of pipe

Presented in tabular form in the table at right entitled "Radius of Curve and Deflection of Pipe in Feet", this chart indicates (1) radius of circle for any given degrees of deflection and pipe length, (2) length of pipe for any given radius and deflection or (3) degrees deflection necessary for any given pipe length and radius. This information is worked out for the more commonly used pipe lengths and degrees deflection.

Expansion & Contraction

Each coupling 10" ID and larger will safely accommodate up to 3/8" longitudinal pipe movement. This is equivalent to the amount of movement resulting from a 120° temperature variation in a 40-foot length of steel pipe. If pipe is not buried, anchorage should be provided to prevent excessive accumulation of movement. For repeated movements such as on a bridge or above ground, or if expansion exceeds 3/8" per joint, a Dresser Style 63 expansion joint should be used.

RADIUS OF CURVE AND DEFLECTION OF PIPE IN FEET

Length of Pipe Sec. (feet)	Radius of Curve (Feet) Varying degrees deflection in each coupling						Deflection of Pipe (Feet/Inches) Varying degrees deflection in each coupling					
	1°	2°	3°	4°	5°	6°	1°	2°	3°	4°	5°	6°
6	344	172	115	84	66	57	1/4"	2-1/2"	3-3/4"	5"	6-1/4"	7-1/2"
12	687	344	229	172	138	114	2-1/2	5	7-1/2	10	1' 5/8	1' 3
16	916	458	306	229	183	153	3-3/8	6-3/4	10	1' 1-1/2	1' 4-3/4	1' 8
18	1031	516	344	258	206	172	3-3/8	7-1/2	1'1-1/4	1' 3-1/8	1' 6-7/8	1'10-1/2
20	1145	573	382	286	229	191	4-1/4	8-3/8	1' 5/8	1' 4-3/4	1' 8-7/8	2' 1
30	1718	860	573	430	344	286	6-1/4	1' 5/8	1' 6-7/8	2' 1	2' 7-7/8	3' 1-5/8
40	2291	1146	764	573	458	382	8-3/8	1' 4-3/4	2' 1	2' 9-1/2	3' 5-7/8	4' 2-1/8

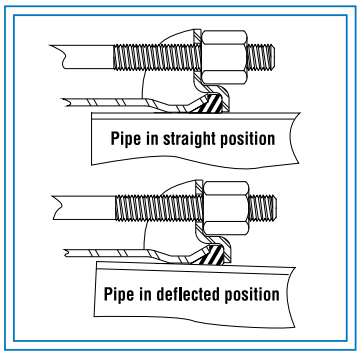

Maximum Recommended Laying Deflection Dresser Style 38 Couplings

From 3/8" ID to 2" ID Inclusive.....6°
From 2" ID to 14" OD Inclusive.....4°

With Middle Ring Lengths:	5"	7"	10"
14" OD - 20" OD Inclusive	2-1/2°	4°	4°
20" OD - 30" OD Inclusive	2°	4°	4°
30" OD - 37" OD Inclusive	1-1/2°	3°	3-1/2°
37" OD - 42" OD Inclusive		2-1/2°	3-1/2°
42" OD - 49" OD Inclusive		2°	3°
49" OD - 54" OD Inclusive		2°	3°
54" OD - 66" OD Inclusive		2°	2-1/2°
66" OD - 78" OD Inclusive			2°
78" OD - 90" OD Inclusive			1-1/2°

Methods of Supporting Coupled Lines

Shown below are three options for supporting pipeline connections when using Dresser couplings. **Figure A** shows the offset method near the pipe joint for diameters 6" and smaller with pipe lengths up to 20 feet. Suitable for any pressure providing pipe is anchored to support for high pressure. **Figure B** indicates the center-type support for diameters from 6" to 16" and lengths not over 20 feet. This method is suitable for pressures up to 25 lb. maximum with pipe fully anchored to supports.

Figure C shows the "Two & One" method for all sizes and any length of pipe up to 40 feet. Suitable for any pressure providing pipe is adequately anchored. When utilizing this method each length of pipe must be anchored to one (and ONLY one) support.

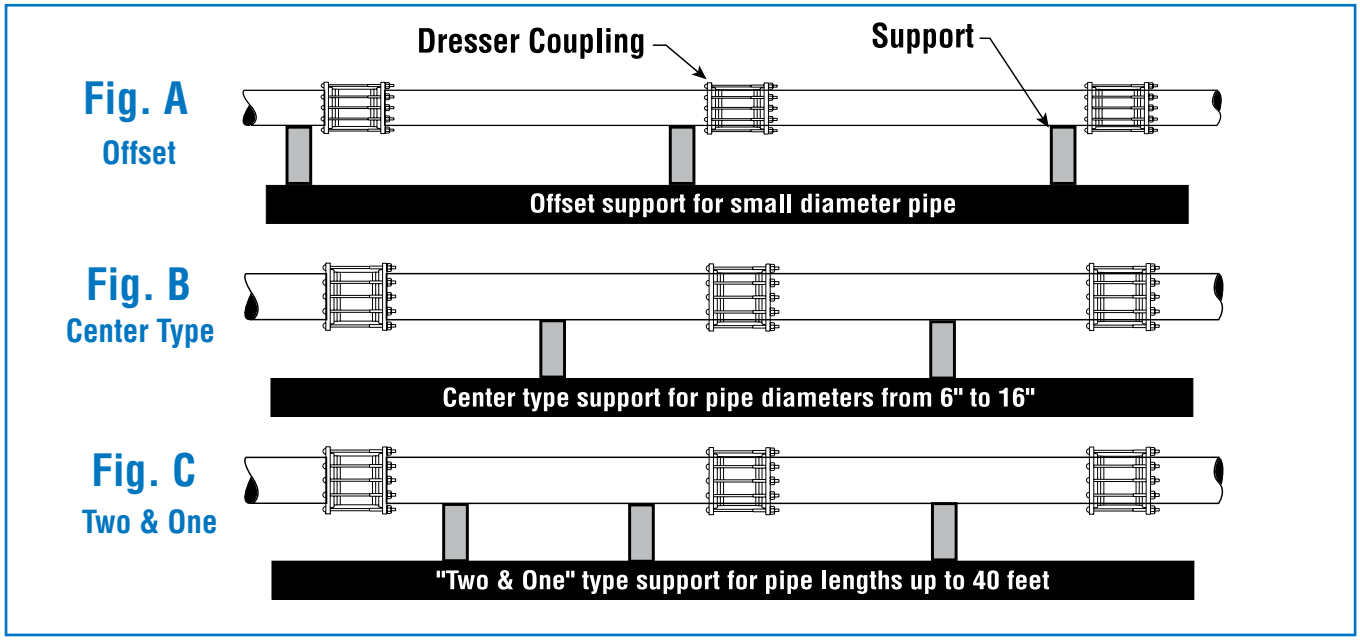

4” Light Pattern Style 38

2” Light Pattern Style 38

Style 38 Bolted Couplings for Steel Pipe

Proven by years of service on all kinds of pipe, **Dresser Style 38 couplings** provide flexible, leakproof connections that last the life of the pipe. No costly threading, beveling, exact pipe fitting or alignment is required. The resilient Dresser gaskets absorb vibration and pipe movement and permit curves to be laid with straight pipe lengths. Installation is safe and sure. There’s no hazard to workmen or delays due to weather. Dresser Style 38 couplings are available from 1/2” ID to over 400” OD.

NOTE: Commonly used sizes are listed in the tables, but couplings can be furnished for practically any size or special condition. **Penstock coupling** brochure available on-line: www.dresser.com.

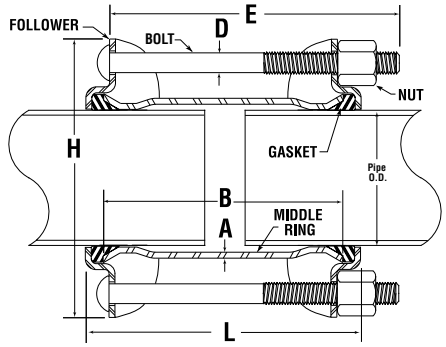

Typical single-piece follower construction

Materials of Construction

Followers: AISI C1012 or ASME SA36 (Ductile Iron or Malleable Iron for 1/2” thru 1-1/2”)

Middle Ring: ASTM A513, ASTM A635 or ASME SA675 GR60

Bolts: AWWA C 111/ANSI A21.11

Coating: Fusion-Bonded Epoxy

Style 38 Couplings

Sizes and Specifications for Steel Pipe

Pipe Nominal Size (In)	Outside Pipe Diameter (OD)	Middle Ring Thickness & Length (A&B)[1]	Bolts[2] No./Diam. x Length (D&E)	Overall Dimensions		Working Pressure[5] Lbs. per Sq.In.	Max. Test Pressure Lbs. per Sq.In.	Approx. Weight Each (Lbs.)
				Diam. (H)	Length[4] (L)			
1/2	.840	.156 x 3-1/2	2–1/2 x 6	3-1/2	8	1500	2250	2
3/4	1.050	.156 x 5	2–1/2 x 7-1/4	3-13/16	8-1/2	1500	2250	3
1	1.315	.148 x 5	2–1/2 x 7-1/4	4-1/16	8-1/2	1500	2250	4
1-1/4	1.660	.154 x 5	2–1/2 x 7-1/4	4-7/16	8-1/2	1500	2250	4
1-1/2	1.900	.165 x 5	2–1/2 x 7-1/4	4-3/4	8-1/2	1500	2250	5
2	*2.375	.156 x 4	2–1/2 x 7-1/4	5-3/8	8-1/2	-	-	4.5
2	2.375	.156 x 5	2–5/8 x 8-1/4	6	9-1/2	1500	2250	7
2	2.375	.156 x 5	3–5/8 x 8-1/4	6-1/4	9-1/2	1500	2250	10
2	2.375	.156 x 7	3–5/8 x 10-3/4	6-1/4	11-1/2	1326	1989	13
2-1/2	2.875	.180 x 5	3–5/8 x 8-1/4	7	9-1/2	1326	1989	13
3	*3.000	.180 x 4	2–1/2 x 7-1/4	6	8-1/2	-	-	6.5
3	*3.500	.156 x 4	3–1/2 x 6	6-1/2	8	-	-	7
3	3.500	.156 x 5	4–5/8 x 6	8	8	982	1473	13.5
3	3.500	.156 x 7	4–5/8 x 8-1/4	8	9-1/2	982	1473	17.5
3-1/2	*4.000	.134 x 4	3–1/2 x 6	7	8	-	-	7.5
3-1/2	4.000	.188 x 5	4–5/8 x 6	8-5/8	8	1034	1561	17
4	*4.500	.188 x 4	3–1/2 x 6	7-1/2	8	-	-	8
4	4.500	.188 x 5	4–5/8 x 6	9	8	931	1396	16.5
4	4.500	.188 x 7	4–5/8 x 8-1/4	9	9-1/2	931	1396	23.5
5	*5.500	.188 x 4	4–1/2 x 6	8-1/2	8	-	-	10
5	5.500	1/4 x 5	4–5/8 x 8-1/4	9-5/8	9-1/2	1205	1808	23.5
5	*5.563	3/16 x 4	4–1/2 x 6	8-1/2	8	-	-	20
5	5.563	1/4 x 5	4–5/8 x 6	10-3/8	8	1205	1808	23.5
5	5.563	1/4 x 7	4–5/8 x 8-1/4	10-3/8	9-1/2	1205	1808	25
6	*6.000	.188 x 4	4–1/2 x 6	10-5/8	8	-	-	11
6	6.000	1/4 x 5	6–5/8 x 6	10-5/8	8	1126	1689	26.5
6	*6.625	.188 x 4	4–1/2 x 6	9-5/8	8	-	-	22.5
6	6.625	1/4 x 5	6–5/8 x 6	11-1/4	8	1029	1544	25.5
6	6.625	1/4 x 7	6–5/8 x 8-1/4	11-1/4	9-1/2	1029	1544	31

*** Light Pattern Couplings** - Standard pressure rating of 150 psi.

Style 38 Coupling Sizes and Specifications for Steel Pipe (cont'd)

Pipe Nominal Size (In)	Outside Pipe Diameter (OD)	Middle Ring Thickness & Length (A&B)[1]	Bolts[2] No./Diam. x Length (D&E)	Overall Dimensions		Working Pressure[5] Lbs. per Sq.In.	Max. Test Pressure Lbs. per Sq.In.	Approx. Weight Each (Lbs.)
				Diam. (H)	Length[4] (L)			
8	*8.000	.188 x 4	5–1/2 x 6	11	8	-	-	15
8	8.000	1/4 x 5	6–5/8 x 8-1/4	11-7/8	9-1/2	866	1299	31
8	*8.625	.188 x 4	6–1/2 x 6	11-5/8	8	-	-	16
8	8.625	1/4 x 5	6–5/8 x 6	13-1/4	8	807	1211	32
8	8.625	1/4 x 7	6–5/8 x 8-1/4	13-1/4	9-1/2	807	1211	38
10	10.000	1/4 x 5	8–5/8 x 8-1/4	13-7/8	9-1/2	703	1055	39
10	10.750	1/4 x 5	8–5/8 x 6	14-5/8	8	657	986	40
10	10.750	1/4 x 7	8–5/8 x 8-1/4	14-5/8	9-1/2	657	986	49
10	10.750	3/8 x 7	8–5/8 x 8-1/4	14-5/8	9-1/2	813	1200	53
12	12.000	1/4 x 7	8–5/8 x 10-3/4	16	11-7/8	591	887	53
12	12.750	1/4 x 5	8–5/8 x 6	16-3/4	6-7/8	558	837	45
12	12.750	1/4 x 7	8–5/8 x 8-1/4	16-3/4	9-1/2	558	837	56
12	12.750	3/8 x 7	8–5/8 x 8-1/4	16-3/4	9-1/2	823	1236	65
14	14.000	1/4 x 7	8–5/8 x 10-3/4	18	11-7/8	510	765	60
	14.000	3/8 x 7	8–5/8 x 10-3/4	18	11-7/8	754	1131	72
16	16.000	1/4 x 7	10–5/8 x 10-3/4	20	11-7/8	449	673	70
	16.000	3/8 x 7	10–5/8 x 10-3/4	20	11-7/8	667	997	82
18	18.000	1/4 x 7	10–5/8 x 10-3/4	22	11-7/8	401	602	75
	18.000	3/8 x 7	10–5/8 x 10-3/4	22	11-7/8	595	892	88
20	20.000	1/4 x 7	12–5/8 x 10-3/4	24-1/16	11-7/8	362	543	86
	20.000	3/8 x 7	12–5/8 x 10-3/4	24-1/16	11-7/8	538	807	90
22	22.000	1/4 x 7	14–5/8 x 10-3/4	26	11-7/8	330	495	98
	22.000	3/8 x 7	14–5/8 x 10-3/4	26	11-7/8	491	736	108
24	24.000	1/4 x 7	14–5/8 x 10-3/4	28	11-7/8	304	456	105
	24.000	3/8 x 7	14–5/8 x 10-3/4	28	11-7/8	451	676	120
30	30.000	1/4 x 7	16–5/8 x 10-3/4	34	11-7/8	243	364	120
	30.000	3/8 x 7	16–5/8 x 10-3/4	34	11-7/8	303	454	153
	30.500	1/4 x 7	16–5/8 x 10-3/4	34-1/2	11-7/8	240	360	125
	30.750	3/8 x 7	16–5/8 x 10-3/4	34-3/4	11-7/8	295	442	158
36	36.000	3/8 x 7	18–5/8 x 10-3/4	40	11-7/8	253	379	181
	36.750	3/8 x 7	18–5/8 x 10-3/4	41-3/4	11-7/8	298	447	227
42	42.000	1/2 x 10	20–5/8 x 15	47	16-1/2	346	519	351
48	48.750	1/2 x 10	22–5/8 x 15	53	16-1/2	304	456	399

*** Light Pattern Couplings** - Standard pressure rating of 150 psi.

NOTE: Only couplings for most commonly used steel pipe sizes are shown. Couplings are supplied for ALL SIZES of steel pipe and are regularly available in any special size. Details and prices will be furnished on request for any size of pipe or for any special conditions. Please consult factory.

1- Middle Rings - Thicker or longer than those listed can be furnished. Please specify if pipe stop is required.
2- Bolts - Furnished E-Coated steel as standard.
3- Gasket - Information appears on Page 20.
4- Dimension "L" - Overall length taken with fasteners drawn up finger tight.
5- Working Pressure - Pressure ratings are determined on the basis of Barlow's formula using a working stress equal to one half the minimum yield of the middle ring material.

For Style 38 Stainless Coupling sizes and specifications, please refer to standard Style 38 coupling charts on pages 5-6

Style 38 Stainless Couplings

For severe service conditions!

When you need a coupling for highly corrosive conditions - too corrosive for ordinary carbon steel couplings - Dresser offers its proven Style 38 coupling in an all-stainless steel design. The coupling is available in either Type 304 or Type 316 stainless steel. Followers are available in Type 316 only. You can also specify the middle ring only in stainless or the nuts and bolts only in stainless.

Dresser Style 38 stainless steel couplings are furnished with gaskets to match the particular service. Available compounds include Buna S (Grade 27) and Buna N (Grade 42), fluorocarbon (Viton®)*, butyl and EPDM. There's also a high temperature gasket for applications up to 1200° F. See gasket recommendation chart on inside back cover.

Dresser stainless steel couplings provide flexible, bottle-tight connections with no need for costly threading, beveling, exact pipe fittings or alignment. Installation is so easy, ordinary workmen can make tight joints every time, only tool needed is a wrench.

*Viton is a Registered trademark of Dupont Corporation

Style 38 and 138 Couplings for CIP/DIP

Dresser Style 38 Couplings are also available for cast and ductile iron pipe sizes 2” through 24”. These couplings have long been used for joining plain end cast-iron pipe, combining the advantages of absolutely tight joints and easier, faster pipe joining. Style 38 couplings also permit the salvage and use of random lengths of cast-iron pipe from which bell-ends or cracked sections have been removed.

Dresser Style 138 Couplings for CIP

Now you can stock one coupling in each nominal size, 2” through 16”, and be sure of a fit, whether the cast-iron pipe was made in 1890 or from your latest shipment. The unique feature of this product is one middle ring can be used with up to six different gaskets and three followers to cover a wide range of pipes.

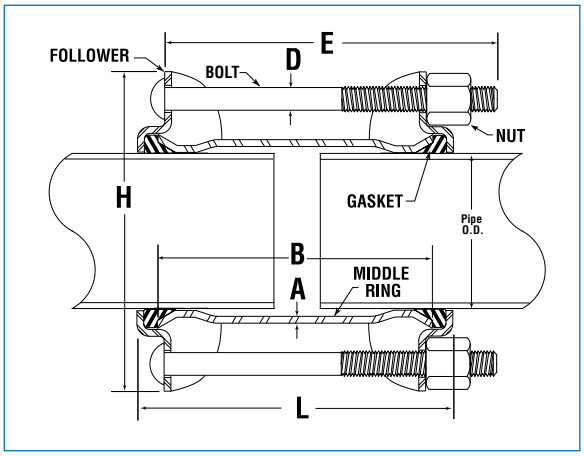

Materials of Construction

Followers: AISI C1012 or ASME SA36 (Ductile Iron or Malleable Iron for 1/2” thru 1-1/2”)

Middle Ring: ASTM A513, ASTM A635 or ASME SA675 GR60

Bolts: AWWA C 111/ANSI A21.11

Gaskets: Grade 27 BUNA S

Coating: Fusion-Bonded Epoxy

Style 38 Coupling Sizes and Specifications for Plain-End Cast-Iron Pipe

Pipe Nominal Size (In)	Outside Pipe Diameter (OD)	Middle Ring Thickness & Length (A&B)	Bolts No./Diam. x Length (D&E)	Overall Dimensions		Working Pressure Lbs. per Sq.In.	Approx. Weight Each (Lbs.)
				Diam. (H)	Length (L)		
2	2.500	.180 x 5	3–5/8 x 8-1/4	6-1/2	9-1/2	1500	10
2-1/4	2.750	.203 x 5	3–5/8 x 8-1/4	7	9-1/2	1326	13
4	4.800	.188 x 5	4–5/8 x 8-1/4	9	9-1/2	1100	15
6	6.90 - 7.16	5/8 x 5	5–5/8 x 8-1/4	11	9-1/2	992	21
8	9.05 - 9.36	5/8 x 5	6–5/8 x 8-1/4	13-1/16	9-1/2	772	31
10	11.10 - 11.46	3/8 x 7	7–5/8 x 10-3/4	16	11-7/8	936	47
12	13.20 - 13.56	3/8 x 7	8–5/8 x 10-3/4	18-1/16	11-7/8	794	54
14	15.300	3/8 x 7	10–5/8 x 10-3/4	19-5/16	11-7/8	575	74
14	15.650	3/8 x 7	10–5/8 x 10-3/4	20-5/8	11-7/8	563	102
16	17.400	3/8 x 7	10–5/8 x 10-3/4	19-3/8	11-7/8	509	88
16	17.800	3/8 x 7	10–5/8 x 10-3/4	22-13/16	11-7/8	498	111
18	19.500	3/8 x 7	12–5/8 x 10-3/4	23-1/2	11-7/8	450	105
18	19.920	3/8 x 7	12–5/8 x 10-3/4	24-15/16	9-5/8	448	124
20	21.600	3/8 x 7	12–5/8 x 10-3/4	25-5/8	9-5/8	411	114
20	22.060	3/8 x 7	14–5/8 x 10-3/4	27-1/16	9-3/4	406	141
24	25.800	3/8 x 7	15–5/8 x 10-3/4	29-3/16	9-1/2	349	134
24	26.320	3/8 x 7	15–5/8 x 10-3/4	31-5/16	9-1/2	343	163

NOTE: See Pages 8 for Sizes and Specifications Charts for Style 138 Couplings

Style 138 Couplings Specifications for Plain-End Cast-Iron Pipe

Nom. Size (CIP)	Pipe O. D. Range (In)		Middle Ring Thickness & Length (A&B)	Bolts Number/Diameter & Length (D&E)	Overall Dimensions		Max. Work. Pressure Lbs. per Sq. In.	Approx. Weight Each (Lbs.)
	END 1	END 2			Diam. (H)	Length (L)		
2	2.34 - 2.63	2.34 - 2.63	.188 x 5	2–5/8 x 8-1/4	6	9-1/2	250	7
2-1/2	2.65 - 2.88	2.65 - 2.88	.180 x 5	2–5/8 x 8-1/4	6-1/2	9-1/2	250	8.5
3	3.50 3.80 - 3.96 3.97 - 4.14	3.50 3.80 - 3.96 3.97 - 4.14	3/8 x 5	4–5/8 x 8-1/4	7-3/4	9-1/2	250	12.5
4	4.46 - 4.86 4.80 - 5.10 5.11 - 5.45	4.46 - 4.86 4.46 - 4.86 4.80 - 5.10	3/8 x 5	4–5/8 x 8-1/4	8-13/16	9-1/2	250	15
6	6.56 - 6.96 6.90 - 7.22	6.56 - 6.96 6.90 - 7.22	3/8 x 5	4–5/8 x 8-1/4	11-3/16	9.5/11/5	250	23.5
8	8.00 - 8.16 8.54 - 9.11 9.05 - 9.45 9.05 - 9.45	8.00 - 8.16 8.54 - 9.11 8.54 - 9.11 9.46 - 9.85	3/8 x 5	6–5/8 x 8-1/4	13-5/16	9.5/11/5	250	32
10	10.50 - 10.75 11.10 - 11.60 11.10 - 11.60	10.50 - 10.75 11.10 - 11.60 10.50 - 10.75	3/8 x 7	6–5/8 x 10-3/4	15-3/4	11.5	250	52
12	13.20 - 13.50 13.20 - 13.50 13.90 - 14.20	13.20 - 13.50 12.50 - 12.75 13.20 - 13.50	3/8 x 7	8–5/8 x 10-3/4	17-15/16	11.5	250	55
16	17.40 - 17.80	17.40 - 17.80	3/8 x 7	10–5/8 x 10-3/4	22-13/16	11.5/15	250	80

One end insulating, one end conductive for electrical isolation on pipeline segments

Style 39 Insulating Couplings

Dresser Style 39 Insulating Couplings are widely used on gas service lines, but are ideal for water and industrial applications for water lines, tank hook-ups, intake and discharge lines, pumping stations, at river crossings and on bridge lines where electrical isolation is required. Dresser insulating couplings are effective for insulating hot water heaters as well as other installations.
The Style 39 coupling follows the same basic design as the Style 38 coupling, but has insulating properties.

NOTE:
Style 39-62 Insulating/Reducing couplings are also available from 2" thru 14" sizes for joining pipes of different O.D.'s and dissimilar metals such as cast-iron x steel connections. Consult factory for your particular requirements.

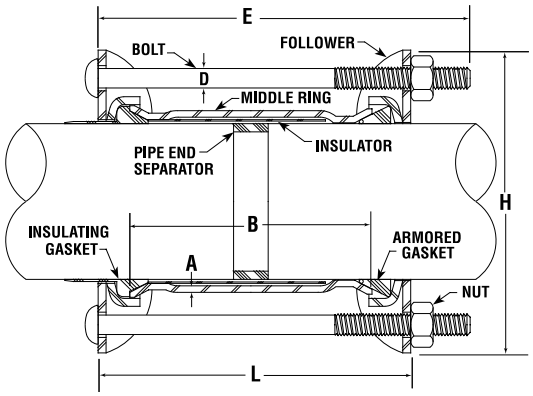

Typical two-piece follower construction

Materials of Construction

Followers: AISI C1012 or ASME SA36 (Ductile Iron or Malleable Iron for 1/2" thru 1-1/2")

Middle Ring: ASTM A513, ASTM A635 or ASME SA675 GR60

Bolts: AWWA C 111/ANSI A21.11

Pipe End Separator & Insulator: Dresser Spec 100 Plastic

Gaskets: Grade 27 Buna S (Armored Pin); Grade 41 On Insulating End

Coating: Fusion-Bonded Epoxy

Style 39 Insulating Couplings

Specifications for Steel Pipe sizes 2" thru 24"

Pipe Nominal Size (In)	Outside Pipe Diameter (OD)	Middle Ring Thickness & Length (A&B)	Bolts No./Diam. x Length (D&E)	Overall Dimensions		Working Pressure Lbs. per Sq.In.	Approx. Weight Each (Lbs.)
				Diam. (H)	Length (L)		
3/4	1.050	.156 x 5	2–1/2 x 7-1/4	3-13/16	8-1/2	150	3
1	1.315	.148 x 5	2–1/2 x 7-1/4	4-1/16	8-1/2	150	4
1-1/4	1.660	.154 x 5	2–1/2 x 7-1/4	4-7/16	8-1/2	150	4
1-1/2	1.900	.165 x 5	2–1/2 x 7-1/4	4-3/4	8-1/2	150	5
2	2.375	.156 x 7	3–5/8 x 10-3/4	6-1/4	11-7/8	150	13
3	3.500	.156 x 7	4–5/8 x 8-1/4	8	9-1/2	350	17.5
4	4.500	.188 x 7	4–5/8 x 8-1/4	9	9-1/2	350	23.5
6	6.625	1/4 x 7	6–5/8 x 8-1/4	11-1/4	9-1/2	900	31
8	8.625	1/4 x 7	6–5/8 x 8-1/4	13-1/4	9-1/2	750	38
10	10.750	1/4 x 7	8–5/8 x 8-1/4	14-5/8	9-1/2	600	49
12	12.750	1/4 x 7	8–5/8 x 8-1/4	16-3/4	9-1/2	550	53
14	14.000	3/8 x 7	8–5/8 x 10-3/4	18	11-7/8	500	72
16	16.000	3/8 x 7	10–5/8 x 10-3/4	20	11-7/8	450	82
18	18.000	3/8 x 7	10–5/8 x 10-3/4	22	11-7/8	400	88
20	20.000	3/8 x 7	12–5/8 x 10-3/4	24-1/16	11-7/8	300	90
24	24.000	3/8 x 7	14–5/8 x 10-3/4	28	11-7/8	300	120

Consult factory for other size requirements and insulating/reducing coupling designs

NOTE: Gaskets utilized for insulating pipe end are Grade 41. Consult factory for further information and exact size specifications.

For widely separated pipe ends

Style 40 Long Body Couplings

Dresser Style 40 Long Body Couplings provide a simple and effective method of joining pipe when gaps in pipe ends are wider than ordinary. Style 40 couplings are similar in construction to Style 38 couplings except that middle rings are longer and have a larger belly diameter. Though longer, they absorb the same amount of expansion and contraction as the Style 38 coupling, up to 3/8" per joint.

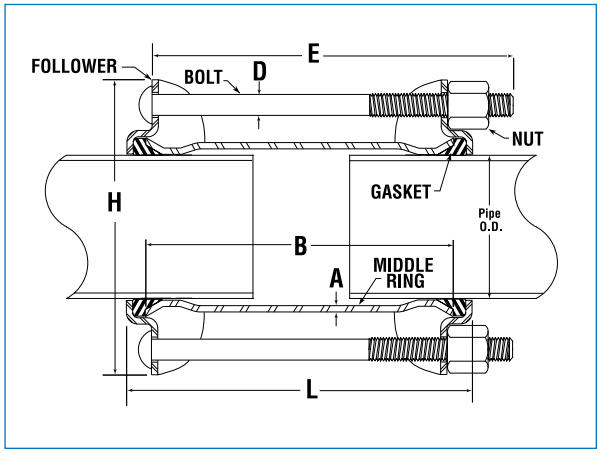

Materials of Construction

Followers: AISI C1012 or ASME SA36 (Ductile Iron or Malleable Iron for 1/2" thru 1-1/2")

Middle Ring: ASTM A513, ASTM A635 or ASME SA675 GR60

Bolts: AWWA C 111/ANSI A21.11

Gaskets: Grade 27 BUNA S

Coating: Fusion-Bonded Epoxy

PRESSURE RATINGS NOTE: Consult factory for pressure ratings that represent your particular product requirements

Style 40 Long Couplings

Specifications for Cast-Iron Pipe Sizes 2" thru 24"

Pipe Nominal Size (In)	Outside Pipe Diameter (OD)	Middle Ring Thickness & Length[1] (A&B)	Bolts[2] No./Diam. x Length (D&E)	Overall Dimensions		Working Pressure Lbs. per Sq.In.	Max. Test Pressure Lbs. per Sq.In.	Approx. Shipping Weight (Lbs.)
				Diam. (H)	Length[3] (L)			
2	2.500	.180 x 12	3–5/8 x 15	6-1/2	17	1302	1953	17
2	2.625	.180 x 12	2–5/8 x 15	6-1/4	17-3/8	1302	1953	18
2	2.750	.180 x 12	3–5/8 x 15	7	17	1302	1953	20
3	3.74 - 4.02	.188 x 12	4–5/8 x 15	7-3/4	17	939	1408	24
4	4.74 - 5.06	.229 x 12	4–5/8 x 15	9	17	250	375	29
6	6.84 - 7.16	1/4 x 16	6–5/8 x 19-1/2	11	21	945	1417	63
8	8.99 - 9.36	1/4 x 16	6–5/8 x 19-1/2	13-1/16	21	743	1114	80
10	11.04 - 11.76	3/8 x 16	8–5/8 x 19-1/2	15-13/16	21-3/4	908	1362	112
12	13.14 - 13.56	3/8 x 16	8–5/8 x 19-1/2	18-1/16	21-3/4	776	1164	135
14	15.300	3/8 x 16	10–5/8 x 19-1/2	18-1/16	21-3/4	675	1012	155
14	15.650	3/8 x 16	10–5/8 x 19-1/2	18-1/16	21-3/4	661	991	164
16	17.400	3/8 x 16	10–5/8 x 19-1/2	18-1/16	21-3/4	600	900	167
16	17.800	3/8 x 16	10–5/8 x 19-1/2	18-1/16	21-3/4	587	880	173
18	19.500	3/8 x 16	12–5/8 x 19-1/2	18-1/16	21-3/4	539	808	203
18	19.920	3/8 x 16	12–5/8 x 19-1/2	18-1/16	21-3/4	529	793	204
18	19.920	3/8 x 24	12–5/8 x 28	18-1/16	29	529	703	269
20	21.600	3/8 x 16	12–5/8 x 19-1/2	18-1/16	21-3/4	490	735	226
20	22.060	3/8 x 16	14–5/8 x 20	18-1/16	22-3/4	480	720	227
24	25.800	3/8 x 16	15–5/8 x 20	18-1/16	22-3/4	414	621	258
24	26.320	3/8 x 24	15–5/8 x 20	18-1/16	22-3/4	406	609	265

1- Middle Rings - Thicker or longer than those listed can be furnished.
2- Bolts - Furnished E-coated steel as standard.
3- Dimension "L" - Overall length taken with fasteners drawn up finger tight.

NOTE: Special and larger sizes are available and special length bodies can be supplied.

Style 40 Long Couplings

Specifications for Steel Pipe Sizes 1/2” thru 24”

Pipe Nominal Size (In)	Outside Pipe Diameter (OD)	Middle Ring Thickness & Length[1] (A&B)	Bolts[2] No./Diam. x Length (D&E)	Overall Dimensions		Working Pressure[5] Lbs. per Sq.In.	Max. Test Pressure Lbs. per Sq.In.	Approx. Shipping Weight (Lbs.)
				Diam. (H)	Length[4] (L)			
1/2	.840	.156 x 12	2–1/2 x 14	3-1/2	15-5/8	1500	2250	4-1/2
3/4	1.050	.156 x 12	2–1/2 x 14	3-13/16	15-5/8	1500	2250	5
1	1.315	.148 x 12	2–1/2 x 14	4-1/16	15-5/8	1500	2250	6
1-1/4	1.660	.154 x 12	2–1/2 x 14	4-7/16	15-5/8	1500	2250	6-1/2
1-1/2	1.900	.165 x 12	2–1/2 x 14	4-3/4	15-5/8	1500	2250	7-1/2
2	2.375	.156 x 12	3–1/2 x 15	6-1/4	17	1500	2250	15
2	2.375	.156 x 24	3–1/2 x 28	6-1/4	29	1500	2250	33
2-1/2	2.875	.180 x 12	3–5/8 x 15	7	17	1500	2250	12
2-1/2	2.875	.180 x 24	3–5/8 x 28	7	29	1500	2250	20-/12
3	3.500	.156 x 12	4–5/8 x 12-3/4	8	15	1500	2250	23
3	3.500	.156 x 24	4–5/8 x 28	8	29	1500	2250	40
3-1/2	4.000	.188 x 12	4–5/8 x 12-3/4	8-5/8	15	1175	1763	25
4	4.500	.188 x 12	4–5/8 x 12-3/4	9	15	1063	1595	28
4	4.500	.188 x 24	4–5/8 x 28	9	29	1063	1595	44
4-1/2	5.000	.229 x 12	4–5/8 x 12-3/4	9	15	930	1395	30
5	5.500	.280 x 16	4–5/8 x 19-1/2	9	21	1162	1743	41
5	5.563	.280 x 16	4–5/8 x 19-1/2	10-3/8	21	1162	1743	51
5-5/8	6.000	.280 x 16	6–5/8 x 19-1/2	10-3/8	21	935	1403	66
6	6.625	1/4 x 16	6–5/8 x 19-1/2	11-1/4	21	968	1452	54
6	6.625	1/4 x 24	6–5/8 x 28	11-1/4	29	968	1452	60
6-5/8	7.000	1/4 x 16	6–5/8 x 19-1/2	11-3/4	21	923	1385	54
7-5/8	8.000	1/4 x 16	6–5/8 x 19-1/2	13-1/4	21	822	1233	60
8	8.625	1/4 x 16	6–5/8 x 19-1/2	13-1/4	21	769	1154	63
8	8.625	1/4 x 24	6–5/8 x 28	13-7/8	29	769	1154	85
9-5/8	10.000	1/4 x 16	8–5/8 x 19-1/2	13-7/8	21	674	1011	75
10	10.750	1/4 x 24	8–5/8 x 28	14-5/8	29	632	948	81
10	10.750	1/4 x 16	8–5/8 x 19-1/2	14-5/8	21	632	948	109
11-5/8	12.000	1/4 x 16	8–5/8 x 19-1/2	16	21	571	857	87
12	12.750	1/4 x 16	8–5/8 x 19-1/2	16-3/4	21-3/4	520	780	119
12	12.750	3/8 x 24	8–5/8 x 28	17-1/8	29-3/4	796	1194	165
14	14.000	1/4 x 16	8–5/8 x 19-1/2	18	21-3/4	732	1098	130
16	16.000	1/4 x 16	10–5/8 x 19-1/2	21	21-3/4	647	971	148
	16.000	3/8 x 24	10–5/8 x 28	21	29-3/4	647	971	200
18	18.000	1/4 x 16	10–5/8 x 19-1/2	22	21-3/4	581	872	175
	18.000	3/8 x 24	10–5/8 x 28	23	29-3/4	581	872	235
20	20.000	1/4 x 16	12–5/8 x 19-1/2	24	21-3/4	526	789	201
	20.000	3/8 x 24	12–5/8 x 28	25	29-3/4	526	789	269
22	22.000	1/4 x 16	14–5/8 x 19-1/2	26	22-3/4	481	722	224
	22.000	3/8 x 24	14–5/8 x 28	27	30-3/4	481	722	299
24	24.000	1/4 x 16	14–5/8 x 19-1/2	28	22-3/4	443	665	240
	24.000	3/8 x 24	14–5/8 x 28	29	30-3/4	443	665	325

1- Middle Rings - Thicker or longer than those listed can be furnished.
2- Bolts - Furnished E-coated steel as standard.
3- Gasket - Information appears on inside back cover.
4- Dimension “L” - Overall length taken with fasteners drawn up finger tight.
5- Working Pressure - Pressure ratings are determined on the basis of Barlow’s formula using a working stress equal to one half the minimum yield of the middle ring material.

PRESSURE RATINGS NOTE: Consult factory for pressure ratings that represent your particular product requirements

For connecting different sizes and types of pipe

Style 62 Reducing/Transition Couplings

Dresser Style 62 Reducing Couplings are ideal for (1) when making actual reductions in pipe size; (2) when changing the class of pipe; and (3) when joining steel and cast iron pipe. They can be supplied for connections between any two kinds or sizes of pipe.

Type I Reducing Couplings are for reductions where the differences in pipe diameters is small, as from standard cast iron to steel of the same nominal size. Standard Style 38 parts are used except the middle ring is swaged on one end.

Type II Reducing Couplings are for larger and special reductions outside the range of Type I. They are made from Style 38 parts with anchor rings welded to the middle ring. Two sets of bolts are supplied.

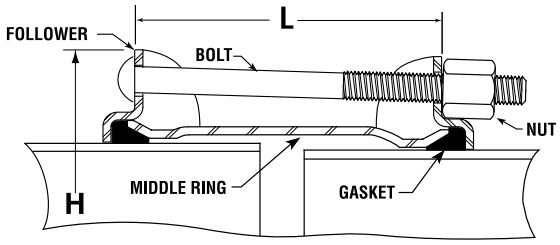

See Style 62 Coupling Dimensions on Page 13

Materials of Construction

Followers: AISI C1012 or ASME SA36
Middle Ring: ASTM A513, ASTM A635 or ASME SA675 GR60
Bolts: AWWA C 111/ANSI A21.11
Gaskets: Grade 27 BUNA S
Coating: Fusion-Bonded Epoxy

NOTE: Style 39-62 Insulating-Reducing couplings are also available for joining pipes of different O.D.'s and dissimilar metals such as cast-iron x steel connections.

Transition Couplings Available…For joining pipe of different diameters

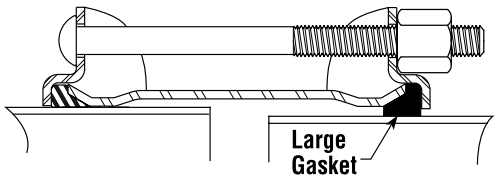

Larger gasket to accommodate smaller pipe

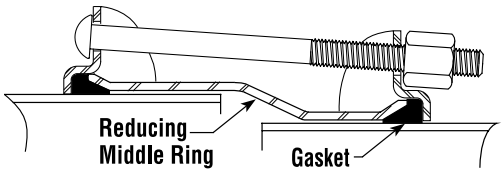

Adjustability with reducing middle ring

Dresser Transition Couplings permits you to connect two different kinds of pipe or sizes of pipe. You simply select the correct coupling for the different pipe diameters being joined. The drawings at left illustrate how gaskets of different cross-sections adjust the coupling to suit your requirements. Further adjustment is accomplished with reducing middle-ring couplings. Please consult factory for size specifications for your particular requirements.

SIZES & SPECIFICATIONS: **See Style 62 Size Specification Charts on Page 13**

Style 62 Reducing Couplings

Type 1 Sizes and Specifications for Steel and Cast Iron Pipe

Nominal Size Inches	Outside Diameter Cast-Iron (Inches)	Outside Diameter Steel (Inches)	Middle Ring Thickness & Length	Bolts[1] No./Diam. & Length	Overall Dimensions		Approx. Shipping Weight (Lbs.)
					Diam. (H)	Length (L)	
3	3.74 - 4.02	3.500	.188 x 5	4–5/8 x 8-1/4	7-3/4	9-1/2	16
4	4.74 - 5.06	4.000	.229 x 7	4–5/8 x 10-3/4	9	11-7/8	23
4	4.74 - 5.06	4.500	.229 x 7	4–5/8 x 10-3/4	9	11-7/8	25
6	6.84 - 7.16	6.000	1/4 x 7	6–5/8 x 10-3/4	11-3/4	11-7/8	27
6	6.84 - 7.16	6.625	1/4 x 7	6–5/8 x 10-3/4	11-3/4	11-7/8	27
8	8.99 - 9.36	8.000	1/4 x 7	6–5/8 x 10-3/4	13-1/4	11-7/8	34
8	8.99 - 9.36	8.625	1/4 x 7	6–5/8 x 10-3/4	13-1/4	11-7/8	36
10	11.04 - 11.46	10.750	3/8 x 7	8–5/8 x 10-3/4	15-9/16	11-7/8	58
12	13.14 - 13.56	12.750	3/8 x 7	8–5/8 x 10-3/4	17-3/4	11-7/8	83
14	15.300	14.000	3/8 x 7	8–5/8 x 10-3/4	19-5/16	11-7/8	85
16	17.400	16.000	3/8 x 7	10–5/8 x 10-3/4	21-3/8	11-7/8	89
16	17.800	16.000	3/8 x 7	10–5/8 x 10-3/4	22-13/16	11-7/8	103
18	19.500	18.000	3/8 x 7	10–5/8 x 10-3/4	23-1/2	11-7/8	117
20	21.600	20.000	3/8 x 7	12–5/8 x 10-3/4	25-5/8	11-7/8	127
20	22.060	20.000	3/8 x 7	12–5/8 x 10-3/4	27-1/16	11-7/8	131
24	25.800	24.000	3/8 x 7	14–5/8 x 10-3/4	29-13/16	11-7/8	162
24	26.320	24.000	3/8 x 7	14–5/8 x 10-3/4	31-5/16	11-7/8	168

1- Bolts - Furnished E-coated steel as standard.
Gasket - Information appears on Inside Back Cover

Transition Couplings - Sizes and Specifications for Steel and CIP

Nominal Size Inches	Outside Diameter Range (Inches)	Middle Ring Thickness & Length	Bolts[1] No./Diam. & Length	Overall Dimensions		Approx. Shipping Weight (Lbs.)
				Diam. (H)	Length (L)	
4	4.74 - 5.06 x 4.46 - 4.54	.229 x 5	4–5/8 x 10-3/4	9	11-7/8	16
	5.06 - 5.42 x 4.46 - 4.54	.229 x 5	4–5/8 x 10-3/4	9	11-7/8	16
6	6.84 - 7.16 x 6.84 - 7.16	1/4 x 5	6–5/8 x 10-3/4	11-3/4	11-7/8	21
	7.15 - 7.45 x 7.15 - 7.45	1/4 x 5	6–5/8 x 10-3/4	11-3/4	11-7/8	21
	7.15 - 7.45 x 6.84 - 7.16	1/4 x 5	6–5/8 x 10-3/4	13-1/4	11-7/8	21
	6.84 - 7.16 x 6.61 - 6.69	1/4 x 5	6–5/8 x 10-3/4	13-1/4	11-7/8	21
	7.15 - 7.45 x 6.61 - 6.69	1/4 x 5	8–5/8 x 10-3/4	15-9/16	11-7/8	21
8	8.99 - 9.22 x 8.99 - 9.22	3/8 x 5	8–5/8 x 10-3/4	17-3/4	11-7/8	29
	9.24 - 9.52 x 9.24 - 9.52	3/8 x 5	8–5/8 x 10-3/4	19-5/16	11-7/8	29
	9.45 - 9.70 x 9.45 - 9.70	3/8 x 5	10–5/8 x 10-3/4	21-3/8	11-7/8	29
	9.24 - 9.52 x 8.99 - 9.22	3/8 x 5	10–5/8 x 10-3/4	22-13/16	11-7/8	29
	9.45 - 9.70 x 8.99 - 9.22	3/8 x 5	10–5/8 x 10-3/4	23-1/2	11-7/8	29
	9.45 - 9.70 x 9.24 - 9.52	3/8 x 5	12–5/8 x 10-3/4	25-5/8	11-7/8	29
	8.99 - 9.22 x 8.61 - 8.69	3/8 x 5	12–5/8 x 10-3/4	27-1/16	11-7/8	30
	9.24 - 9.52 x 8.61 - 8.69	3/8 x 5	14–5/8 x 10-3/4	29-13/16	11-7/8	30
	9.24 - 9.70 x 8.61 - 8.69	3/8 x 5	14–5/8 x 10-3/4	31-5/16	11-7/8	30
10	11.34 - 11.73 x 11.04 - 11.46	3/8 x 5	14–5/8 x 10-3/4	31-5/16	11-7/8	32
	11.34 - 11.73 x 11.34 - 11.73	3/8 x 5	14–5/8 x 10-3/4	31-5/16	11-7/8	32
	11.87 - 12.24 x 11.04 - 11.46	3/8 x 7	14–5/8 x 10-3/4	31-5/16	11-7/8	50
	11.87 - 12.24 x 10.73 - 10.81	3/8 x 7	14–5/8 x 10-3/4	31-5/16	11-7/8	50
12	14.13 - 14.51 x 12.72 - 12.84	3/8 x 7	14–5/8 x 10-3/4	31-5/16	11-7/8	58
	14.13 - 14.51 x 13.14 - 13.56	3/8 x 7	14–5/8 x 10-3/4	31-5/16	11-7/8	58

1- Bolts - Furnished E-coated steel as standard.
Gasket - Information appears on Inside Back Cover

For close-off, testing and capping "dead-ends" for future branch extensions

Style 31 Line Cap

Dresser Style 31 Line Caps are used to close off sections of a pipeline during construction and testing, and to cap off dead-ends in the line for future branch connections. Style 31 Line Caps are made from Style 38 Dresser coupling parts with a convex steel dished head welded into one end of the middle ring. One follower ring is welded to the cap itself, and only one gasket is required.

The Style 31 is regularly supplied with a 1" NPT vent and plug off-center. When ordering, please specify whether vent is to be provided. The Dresser Style 31 Line Cap is also available in an insulating design with insulating gasket, insulating sleeve and and pipe-end separator.

WARNING: Style 31 Line Caps must NOT be used under pressure **WITHOUT ANCHORAGE OR BLOCKING** sufficient to withstand the entire longitudinal thrust due to internal pressure.

Style 31 Line Caps

Sizes and Specifications for Steel Pipe

Pipe Nominal Size (ID)	Outside Pipe Diameter (OD)	Middle Ring Thickness & Length (A&B)	Bolts No./Diam. x Length (D&E)	Working* Pressure Lbs. per Sq.In.	Approx. Weight Each (Lbs.)
2	2.375	.187 x 5	3–5/8 x 8-1/4	150	12
3	3.500	.203 x 2-1/2	4–5/8 x 6	150	16
4	4.500	.5/16 x 3-1/2	4–5/8 x 6	150	19
6	6.625	.5/16 x 3-1/2	6–5/8 x 6	150	28
8	8.625	3/8 x 5	6–5/8 x 8-1/4	150	37
10	10.750	3/8 x 5	8–5/8 x 10-3/4	150	50
12	12.750	3/8 x 5	8–5/8 x 10-3/4	150	58
14	14.000	3/8 x 7	10–5/8 x 10-3/4	150	73
16	16.000	3/8 x 7	10–5/8 x 10-3/4	150	86
18	18.000	3/8 x 7	12–5/8 x 10-3/4	150	98
20	20.000	3/8 x 7	12–5/8 x 10-3/4	150	113
24	24.000	3/8 x 7	15–5/8 x 10-3/4	150	187

Sizes and Specifications for Cast-Iron Pipe

Pipe Nominal Size (ID)	Outside Pipe Diameter (OD)	Middle Ring Thickness & Length (A&B)	Bolts No./Diam. x Length (D&E)	Working* Pressure Lbs. per Sq.In.	Approx. Weight Each (Lbs.)
2	2.500	.187 x 5	3–5/8 x 8-1/4	150	12
3	3.800	.188 x 5	4–5/8 x 8-1/4	150	13
3	3.960	.203 x 5	4–5/8 x 8-1/4	150	18
4	4.800	.229 x 5	4–5/8 x 8-1/4	150	17
4	5.000	.229 x 5	4–5/8 x 8-1/4	150	17
6	6.900	1/4 x 5	6–5/8 x 8-1/4	150	27
6	7.100	1/4 x 5	6–5/8 x 8-1/4	150	27
8	9.050	1/4 x 5	6–5/8 x 8-1/4	150	42
8	9.300	1/4 x 5	6–5/8 x 8-1/4	150	45
10	11.100	3/8 x 7	8–5/8 x 10-3/4	150	71
10	11.400	3/8 x 7	8–5/8 x 10-3/4	150	72
12	13.200	3/8 x 7	8–5/8 x 10-3/4	150	100
12	13.500	3/8 x 7	8–5/8 x 10-3/4	150	106
14	15.300	3/8 x 7	10–5/8 x 10-3/4	150	120
14	15.650	3/8 x 7	10–5/8 x 10-3/4	150	124
16	17.400	3/8 x 7	10–5/8 x 10-3/4	150	136
16	17.800	3/8 x 7	10–5/8 x 10-3/4	150	147
18	19.500	3/8 x 7	12–5/8 x 10-3/4	150	163
18	19.920	3/8 x 7	12–5/8 x 10-3/4	150	167
20	21.600	3/8 x 7	12–5/8 x 10-3/4	150	183
20	22.060	3/8 x 7	14–5/8 x 10-3/4	150	192
24	25.800	3/8 x 7	15–5/8 x 10-3/4	150	230
24	26.320	3/8 x 7	15–5/8 x 10-3/4	150	235

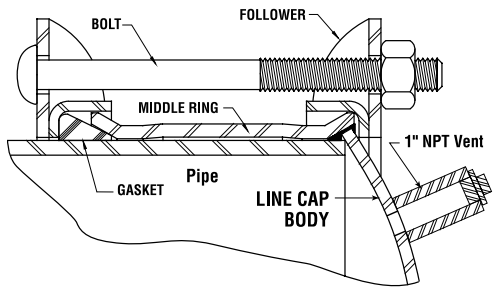

Style 31 Line Cap
(Vent Optional)

Materials of Construction

Followers: AISI C1012 or ASME SA36 (Ductile Iron or Malleable Iron for 1/2" thru 1-1/2")

Middle Ring: ASTM A513, ASTM A635 or ASME SA675 GR60

Bolts: AWWA C 111/ANSI A21.11

Gasket: Grade 27 BUNA S (Armored)

Coating: Fusion-Bonded Epoxy

NOTE: Style 31 Line Caps are supplied with 1" IPS vents in center of head as standard for 2" and 3" sizes. 4" and larger are furnished with 1" IPS vent off-center (see photo above). Caps with no vents and caps with lock pins are available upon request. Consult factory for your particular requirements.

***Higher pressures available per application.**

For drilled-end pipe

Style 167 Lock Couplings

Provides additional holding strength under unusual service conditions

Dresser Style 167 Lock Couplings actually "lock" the pipe and the coupling together to protect the line from pipe separation due to unusual movement. These couplings are for exceptional conditions such as ash handling and coal transmission lines, or unanchored high-pressure surface lines where added holding strength is desired.

Style 167 lock couplings utilize standard Style 38 parts with the addition of leak-proof locking pins. The locking arrangement consists of threaded steel locking plugs at each end which extend through the middle ring into corresponding holes drilled in the pipe ends. This construction permits a "universal joint" action of the pipe in the coupling, yet prevents the pipe from pulling out under excessive longitudinal stresses.

Style 167 Lock Couplings

Specifications for Sizes 3" thru 12"

STYLE 167 FOR DRILLED-END STEEL PIPE

Nominal Size (In.)	Pipe O.D. (In.)	Middle Ring Length (In.)	Shipping Weight (lbs.)
3	3.500	10	17
3-1/2	4.000	10	19
4	4.500	10	21
4-1/2	5.000	10	22
5	5.562	10	25
	6.000	10	30
6	6.625	10	31
6	7.000	10	33
6	8.000	10	37
8	8.625	10	38
	10.000	10	46
10	10.750	10	51
12	12.750	10	58

STYLE 167 FOR DRILLED-END CIP

Nominal Size (In.)	Pipe O.D. (In.)	Middle Ring Length (In.)	Shipping Weight (lbs.)
3	3.800	10	19
3	3.960	10	19
4	4.800	10	24
4	5.000	10	24
6	6.900	10	31
6	7.100	10	33
8	9.050	10	39
8	9.300	10	42
10	11.100	10	64
10	11.400	10	65
12	13.200	10	88
12	13.500	10	90

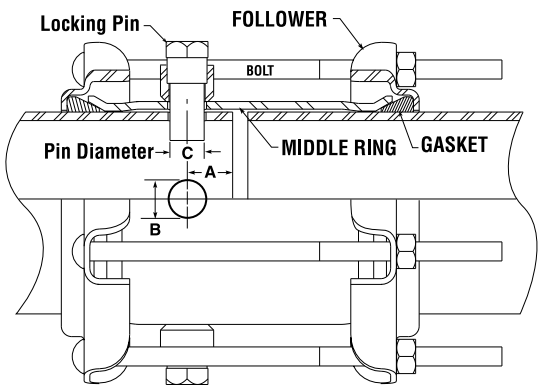

Style 167 Pipe-Drilling Table

Locking Pin		Drilling Dimensions	
Nominal Size	Lock Pin Diameter (C)	Distance from End of Pipe (A)	Drill Size (B)
1/2"	11/16"	15/16"	13/16"
3/4"	29/32"	1-1/4"	1-1/16"
1"	1-1/8"	1-7/16"	1-1/4"

Materials of Construction

Followers: AISI C1012 or ASME SA36
Middle Ring: ASTM A513, ASTM A635 or ASME SA675 GR60
Bolts: AWWA C 111/ANSI A21.11
Gaskets: Grade 27 BUNA S
Coating: Fusion-Bonded Epoxy Powder; Optional Shopcoat

Style 128-W Flange Adapter

Fabricated to order from high-strength steel, **Dresser Style 128-W Flange Adapters** afford the engineer a complete size range up to 24" diameter in steel, cast-iron and A-C pipe sizes. Flanges can be supplied to AWWA specification C-207 as well as other U.S. and international standards.

The compression end of the adapter has a Dresser coupling type design utilizing a wedge gasket for an efficent, leak-proof seal. Insulating designs can also be furnished. The Style 128-W is also available with lock pins to provide anchorage to the pipe. Larger sizes are available upon request.

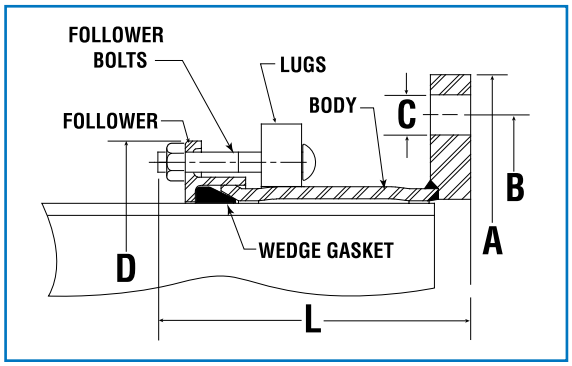

Materials of Construction

Follower: AISI C1012 or ASME SA36
Body & Flange: ASTM A513, ASTM A635 or ASME SA675 GR60
Bolts & Nuts: Alloy to AWWA C 111/ANSI A21.11
Gasket: Grade 27 BUNA S
Coating: Fusion-Bonded Epoxy

Style 128-W Flange Adapter

Sizes and Specifications for Steel Pipe

Nominal Size (Steel)	Outside Diameter (Inches)	Body Thickness	Follower End Bolts Number Diam. & Length	Overall Flange Diameter (A)	Bolt Circle Diameter (B)	No. of Bolt Holes x Diameter (C)	Overall Follower Diameter (D)	Overall Length (L)	Approx. Shipping Weight (Lbs)
2	2-3/8	.156	3–5/8 x 4	6	4-3/4	4 x 3/4"	6-1/4	8-5/8	14
3	3-1/2	.156	4–5/8 x 4	7-1/2	6	4 x 3/4"	7-3/8	8-13/16	19
4	4-1/2	.188	4–5/8 x 4	9	7-1/2	8 x 3/4"	8-3/4	8-13/16	25
5	5-9/16	1/4	4–5/8 x 4	10	8-1/2	8 x 7/8"	9-5/8	9-9/16	30
6	6-5/8	1/4	6–5/8 x 4	11	9-1/2	8 x 7/8"	10-1/2	9-1/16	38
8	8-5/8	1/4	6–5/8 x 4	13-1/2	11-3/4	8 x 7/8"	12-7/16	9-1/16	52
10	10-3/4	1/4	8–5/8 x 4	16	14-1/4	12 x 1"	14-5/8	9-3/16	58
12	12-3/4	1/4	8–5/8 x 4	19	17	12 x 1"	16-3/4	9-11/16	79
	14	1/4	8–5/8 x 4	21	18-3/4	12 x 1-1/8"	18	9-3/4	89
	16	3/8	10–5/8 x 4	23-1/2	21-1/4	16 x 1-1/8"	20	9-3/4	103
	18	1/4	10–5/8 x 4-1/2	25	22-3/4	16 x 1-1/4"	22	9-3/4	112
	20	3/8	12–5/8 x 4-1/2	27-1/2	25	20 x 1-1/4"	24	9-3/4	127
	24	3/8	14–5/8 x 4-1/2	32	29-1/2	20 x 1-3/8"	28	10	184

Sizes and Specifications for Cast-Iron Pipe

Nominal Size (CIP)	Outside Diameter (Inches)	Body Thickness	Follower End Bolts Number Diam. & Length	Overall Flange Diameter (A)	Bolt Circle Diameter (B)	No. of Bolt Holes x Diameter (C)	Overall Follower Diameter (D)	Overall Length (L)	Approx. Shipping Weight (Lbs)
3	3.74 - 4.02	.188	4–5/8 x 4	7-1/2	6	4 x 3/4"	7-3/4	8-11/16	25
4	4.74 - 5.06	.229	4–5/8 x 4	9	7-1/2	8 x 3/4"	9	9-7/16	30
6	6.84 - 7.16	1/4	4–5/8 x 4	11	9-1/2	8 x 7/8"	11-3/16	9-1/16	36
8	8.99 - 9.36	1/4	6–5/8 x 4	13-1/2	11-3/4	8 x 7/8"	13-1/2	9-1/16	50
10	11.04 - 11.46	3/8	8–5/8 x 4	16	14-1/4	12 x 1"	15-9/16	9-3/16	69
12	13.14 - 13.56	3/8	8–5/8 x 4-1/2	19	17	12 x 1"	17-13/16	9-11/16	95
14	15.30	3/8	10–5/8 x 4-1/2	21	18-3/4	12 x 1-1/8"	19-3/8	9-3/4	112
16	17.40	3/8	10–5/8 x 4-1/2	23-1/2	21-1/4	16 x 1-1/8"	21-7/16	9-3/4	132
16	17.80	3/8	10–5/8 x 4-1/2	23-1/2	21-1/4	16 x 1-1/8"	21-13/16	9-3/4	140
18	19.50	3/8	12–5/8 x 4-1/2	25	22-3/4	16 x 1-1/4"	23-1/2	9-3/4	151
20	21.60	3/8	12–5/8 x 4-1/2	27-1/2	25	20 x 1-1/4"	25-5/8	9-3/4	168
24	25.80	3/8	15–5/8 x 4-1/2	32	29-1/2	20 x 1-3/8"	29-13/16	10	230

For absorbing concentrated pipe movement

NOTE:
See Page 2 for Style 63 ordering information

Style 63 Expansion Joints

Dresser offers the broadest line of **Style 63 Expansion Joints** including single-end (Type 1 and Type 3 shown below), and double-end (Type 2 & 4), limited-movement types, flanged, lock coupled, or weld ends. Aggressive wear and pipe wall failure caused by fatigue of the convoluted surfaces present in rubber accordion or metal bellows types is eliminated with Dresser expansion joints. There is no need for expensive pipe loop systems.

Dresser expansion joints are built to order and are available up to 120” in diameter. Provided with rugged welded steel construction, the Style 63 is available in stainless or carbon steel, monel or other alloys for special applications. Single-end expansion joints permit up to 10” of concentrated pipe movement. Larger amounts of movement are available per application.

Special packing and lubrication requirements are custom-matched to specific fluid processes or application requirements. Temperature ratings to 800°F and pressure ratings to 1200 psi.

Available with Dresser AL-CLAD™ coating for optimum protection against aggressive water conditions and for handling brine, brackish water, coke oven gas, petroleum and other line content.

Materials of Construction

Body: AISI C1006, C1010, C1015, C1025 or ASTM A513 Carbon Steel
Follower: AISI C1012, C1021, ASTM A20 or A36 Carbon Steel
Slip Pipe: Chrome plated
Tail Pipe: AISI C1006, C1010, C1015, C1025 or ASTM A513 Carbon Steel
Bolts & Nuts: ANSI/AWWA C111/ANSI A21.11
Packing: Standard packing is alternate rings of Buna-S and lubricating split jute

Style 63 Type 1 Sizes and Specifications

Pipe Nominal Size (In)	Outside Diameter (OD)	Bolts No./Diam. x Length (A&B)	Overall Dimensions		Weight Per Joint (Lbs)
			Diam. (C)	Length (D) (E)	
3	3.500	4–5/8 x 11	8-1/2	CONSULT FACTORY PER ORDER	65
4	4.500	4–5/8 x 11	9-1/2		75
5	5.563	4–5/8 x 11	10-5/8		110
6	6.625	6–5/8 x 11	11-3/4		130
8	8.625	6–5/8 x 11	13-3/4		180
10	10.750	8–5/8 x 11	15-7/8		250
12	12.750	8–5/8 x 11	17-7/8		315
	14.000	8–5/8 x 11	19-1/2		340
	16.000	10–5/8 x 11	21-1/2		380
	18.000	10–5/8 x 11	23-1/2		415
	20.000	12–5/8 x 11	25-1/2		470
	22.000	14–5/8 x 11	27-1/2		525
	24.000	14–5/8 x 11	29-1/2		565

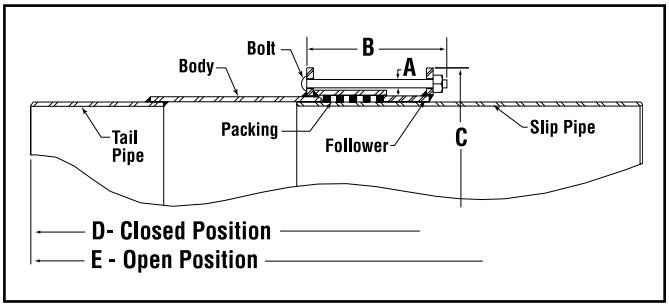

Type 1 is a single-end expansion joint permitting up to 10” of concentrated pipe movement. Standard packing consists of alternate layers of split resilient sealing rings and jute lubricating rings. Other packing for special conditions can be supplied.

Style 63 Type 3 Sizes and Specifications

Pipe Nominal Size (In)	Outside Diameter (OD)	Bolts No./Diam. x Length (A&B)	Overall Dimensions		Weight Per Joint (Lbs)
			Diam. (C)	Length (D) (E)	
3	3.500	4–5/8 x 24	8-1/2	CONSULT FACTORY PER ORDER	80
4	4.500	4–5/8 x 24	9-1/2		90
5	5.563	4–5/8 x 24	10-5/8		125
6	6.625	6–5/8 x 24	11-3/4		155
8	8.625	6–5/8 x 24	13-3/4		205
10	10.750	8–5/8 x 24	15-7/8		285
12	12.750	8–5/8 x 24	17-7/8		350
	14.000	8–5/8 x 24	19-1/2		385
	16.000	10–5/8 x 24	21-1/2		430
	18.000	10–5/8 x 24	23-1/2		470
	20.000	12–5/8 x 24	25-1/2		530
	22.000	14–5/8 x 24	27-1/2		590
	24.000	14–5/8 x 24	29-1/2		635

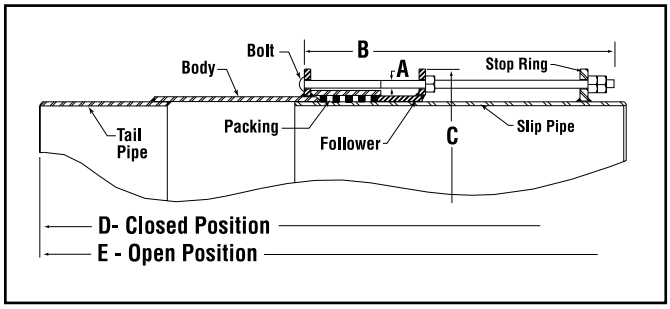

Type 3 is a single-end expansion joint equipped with a limited movement feature to limit the maximum amount of pipe withdrawal. Slip pipes are regularly furnished for Type 3 expansion joints.

Dresser Dismantling Joints are available in a variety of coatings to suit operating and environmental conditions, and gasket compounds are selected for compatibility with line content, with the standard gasket available in Grade 27 Buna S.

Style 131 Dismantling Joint

The **Dresser Style 131 Dismantling Joint** is a double-ended flanged adapter that allows for longitudinal adjustment in piping systems where flanged end pipe is the standard. This product will provide the maximum in flexibility when installing and maintaining flanged end pipe interfaces with check valves, gate valves, ball valves, pumps, blowers, meters, engines, compressors, various fittings and appurtenances.

A typical dismantling joint would be used anywhere that a flanged end piping accessory, such as a valve or pump, requires quick installation or removal. The product eliminates the need to drop an inlet or discharge pipe leg normally associated with flanged end pipe. It also allows for up to 2 degrees of misalignment, and can be designed to provide from 2” to 20” of longitudinal adjustment to the pipe ends.

This longitudinal adjustment, provided by a telescoping flanged spool piece, can be limited with the addition of tie rods, which are integral with the joint. As a consequence of this flexibility, center to center dimensions become less critical to the installer and installation time is reduced considerably.

Dresser Dismantling Joints are available in diameters ranging from 4” through 24” in standard designs, and through 96” in diameter for custom-engineered designs. Fabricated in either carbon steel or stainless steel, standard design features flanges supplied to AWWA specification C-207 with a maximum working pressure of 150 PSI. Flanges manufactured to other U.S. and international standards and higher pressure ratings available upon request.

Materials of Construction

Spool Piece: Steel - AISI C1010-C1015
Flange Adapter: Steel - AISI C1010-C1015
Tie Rods (2) (Optional): Steel - ASTM A193 Grade B7
Nuts: ASTM A194 Grade 2H
Gasket: Grade 27 BUNA S
Coatings: Fusion-Bonded Epoxy. Optional Dresser Shopcoat

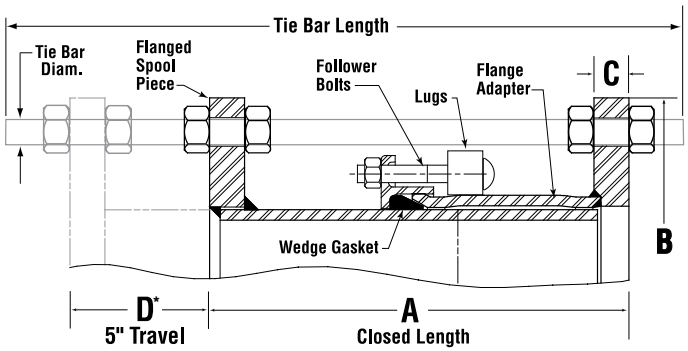

*D - Standard 5" Travel. Others available upon request.

Style 131 Dismantling Joint - Dimension Specifications 4” through 24”

Nominal Size	Closed Length (A)	Tie Rod (Optional) Diam.	Tie Rod (Optional) Length	Min. Flange Thickness (C)	Flange O.D. (B)
4”	12-3/8”	5/8”	22”	5/8”	9”
5”	12-3/8”	5/8”	22”	5/8”	10”
6”	12-3/4”	3/4”	24”	11/16”	11”
8”	12-3/4”	3/4”	24”	11/16”	13-1/2”
10”	13-1/4”	7/8”	24”	11/16”	16”
12”	13-3/8”	7/8”	24”	13/16”	19”

Nominal Size	Closed Length (A)	Tie Rod (Optional) Diam.	Tie Rod (Optional) Length	Min. Flange Thickness (C)	Flange O.D. (B)
14”	14”	1”	26”	15/16”	21”
16”	14-1/8”	1”	26”	1”	23-1/2”
18”	14-1/2”	1-1/8”	26”	1-1/16”	25”
20”	14-5/8”	1-1/8”	26”	1-1/18”	27-1/2”
24”	15-1/8”	1-1/4”	28”	1-1/4”	32”

NOTE 1: Tie rods are designed for 150 PSI Maximum Working Pressure. (Tie rods are optional by request)
NOTE 2: Other types and larger sizes available on request. (e.g. ANSI 150# and 300#)

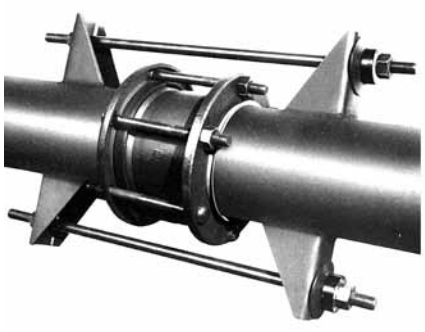

Provides additional reinforcement of coupled joints

Style 440 Joint Harnesses

Dresser Style 440 Joint Harnesses are steel tie-bolts, diametrically opposite, which extend across a coupled joint from lugs welded to the pipe on either side of the joint. Joint harnesses are particularly effective on unanchored bends subject to pulsating pressures of sharp intensity.

Available as conductive or insulating, Dresser Joint Harnesses have been designed to meet D.O.T. Regulation Part II, Section 192.273 and meet all safety requirements of modern gas distribution system practices. Lugs are made of rugged construction for optimum strength. Insulators are of high-quality thermoplastic resin compound providing minimum insulating rating of 5 megohms at 100V, and will not short out. A deflection ring placed behind one lug deflects to absorb contraction in connected pipes occurring after installation eliminating harmful stresses. Individual harnesses may be installed in the field as either insulated or conductive by simply interchanging parts.

Each Dresser Style 440 Joint Harness consists of two lugs, one deflection ring, one stud bolt and two nuts. Harnesses are furnished with either 5/8” or 3/4” stud bolts in lengths of 26” for 5” middle rings; 32” for 7” middle rings; and 44” for 12” & 16” middle rings. See selector chart below for pipe diameters and line working pressure.

Style 440 Joint Harnesses

Selector Chart - Number of Joint Harnesses Required by Pipe Diameter, Bolt Size and Working Pressure

Pipe Diam.	Bolt Size	Line Working Pressure (PSI) 25	50	75	100	125	150	175	200	225	250	275	300
2” - 6”	5/8”	2	2	2	2	2	2	2	2	2	2	2	2
8”	5/8”	2	2	2	2	2	2	2	2	2	2	3	3
	3/4”	2	2	2	2	2	2	2	2	2	2	2	2
10”	5/8”	2	2	2	2	2	2	3	3	3	3	4	4
	3/4”	2	2	2	2	2	2	2	2	2	2	3	3
12”	5/8”	2	2	2	2	3	3	3	4	4	5	5	6
	3/4”	2	2	2	2	2	2	2	3	3	3	3	4
14”	5/8”	2	2	2	3	3	4	4	5	5	6	6	7
	3/4”	2	2	2	2	2	2	3	3	3	4	4	4
16”	5/8”	2	2	2	3	4	4	5	6	6	7	8	8
	3/4”	2	2	2	2	3	3	3	4	4	5	5	5
18”	5/8”	2	2	3	4	5	5	6	7	8	9	10	10
	3/4”	2	2	2	3	3	4	4	5	5	6	6	7
20”	5/8”	2	3	4	5	6	7	8	9	10	11	12	13
	3/4”	2	2	2	3	4	4	5	6	6	7	8	8
24”	5/8”	2	3	5	6	8	9	11	12	14	15	15	15
	3/4”	2	2	3	4	5	6	7	8	9	10	11	12
30”	3/4”	2	3	5	6	8	9	11	12	14	15	16	18
36”	3/4”	3	5	7	9	11	13	15	17	19	21	23	26

NOTE: Style 440 Joint Harnesses are joints of special fabrication and built for special conditions. Use of any one of these products is limited and never required for ordinary conditions. In all cases of unusual service conditions that may require these devices consult Dresser engineers to assist with recommendations for your particular requirements.

Insulating Joint Harness Deflection Rings

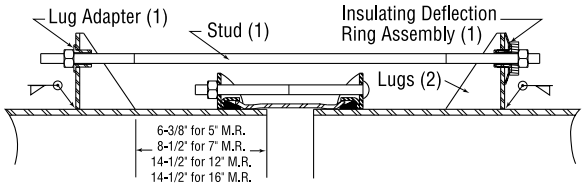

Conductive Joint Harness Deflection Rings

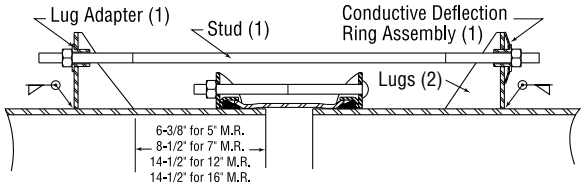

Standard Style 440 Design

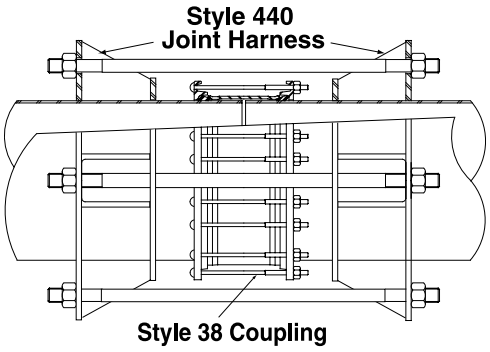

AWWA M-11 Design

Offered with corrosion-resistant alloy bolts and nuts

Style 253 Cast Coupling

The **Dresser Style 253 Cast Coupling** is designed to allow a faster, easier way to join all your waterworks piping – steel, cast or ductile iron, and PVC – regardless of pipe class or O. D. and comes in a wide range of sizes from 2”- 16” O.D. The Style 253 is constructed of ductile iron and features a color-coding system intended to facilitate installation and reduce your coupling inventory requirements.

Each coupling follower is color-coded for the type of pipe it is designed to fit. Matching gaskets are also imprinted with the correct color, as well as the O. D. range for ease of quick identification. You’ll always have the right coupling for the job – without carrying a separate coupling for every class or type of pipe. Ruggedly constructed, the Style 253 gives you positive gasket confinement for a safe leak-proof seal.

Materials of Construction

Followers and Middle Rings: Ductile iron to ASTM A-536. Grade 65-45-12 (Dresser Spec. 0259)

Bolts: AWWA C 111/ANSI A21.11

Gaskets to Spec. 0035, conform to compression set test ASTM D-395 method A & B, approved for water applications

Coating: Fusion-Bonded Epoxy

Ratings to 200 PSI working pressure per AWWA C219, and -20°F to 212°F.

- Testing per AWWA C-219 (ANSI A21.11)

Style 253 Cast Couplings

Specifications for Sizes 2” thru 16” - All Supplied with 5” Middle Rings

Nominal Pipe Size (In)	Range* O.D. Inches	Bolts Number Dia. x Length (In)	Alloy** Bolts & Nuts Assembly Part No.	Primary Pipe Applications	Approx. Shipping Weight (Lbs.)
2	2.34 - 2.63	2—5/8 x 7	0253-0263-0263-00	Steel	6
2-1/2	2.65 - 2.88	2—5/8 x 7	0253-0288-0288-00	Steel	8
3	3.50 3.80 - 3.96	4—5/8 x 7	0253-0350-0350-00 0253-0396-0396-00	Steel DIP	12
4	4.46 - 4.86 4.80 - 5.10	4—5/8 x 8-1/4	0253-0486-0486-00 0253-0510-0510-00	Steel/DIP/Pit Cast “A” DIP/Al Pit Cast/PVC	15
6	6.56 - 6.96 6.90 - 7.22	6—5/8 x 8-1/4	0253-0696-0696-00 0253-0722-0722-00	Steel/DIP/Pit Cast “A”/PVC DIP/CIP	23
8	8.54 - 9.11 9.05 - 9.45	6—5/8 x 8-1/4	0253-0911-0911-00 0253-0945-0945-00	Steel/DIP/Pit Cast A&B CIP	32
10	10.50 - 10.75 11.10 - 11.60	6—5/8 x 9-1/2	0253-1075-1075-00 0253-1160-1160-00	Steel DIP/CIP	52
12	12.50 - 12.75 13.20 – 13.50	8—5/8 x 9-1/2	0253-1275-1275-00 0253-1350-1350-00	Steel DIP	55
16	17.40 - 17.80	10—5/8 x 10-3/4	0253-1780-1780-00	DIP	80

*Published ranges indicate nominal pipe outside diameters. Couplings are designed for pipes within current AWWA standard tolerances.

**Stainless Steel Bolts and Nuts are available upon request. Consult factory for your particular requirements.

DRESSER® Life-time Gaskets

Dresser Compounded Rubber Gaskets

Pipe joints must be able to absorb pipe stress caused by natural forces and natural expansion, contraction, vibration and deflection while the line is in service. The sealing capabilities and the extreme flexibility of a Dresser coupled joint is made possible by the resilience of the rubber-compounded gaskets. Resiliency is the property that enables the gaskets to maintain pressure against the followers that confine it and, at the same time, allow for flexibility not found in rigid piping connections. Without it, a flexible joint is not possible!

Simply put, the absorption of pipeline stress permits each section of the pipeline to "float" in the joint ensuring a flexible piping system while avoiding leakage, line breaks, costly repairs and service interruptions.

Armored® Gaskets

Armored gaskets can be used to great advantage where low electrical-resistant joints are desired. The armor "bites" into the pipe providing metal to metal contact allowing easy passage of current where cathodic protection is a necessity.

The armor–an elastic, practically indestructible brass coil or helix–is molded into the gasket tip becoming an integral part of the gasket. When used with the proper grade/compound rubber, the armor shields the gasket material from the line content without interfering with the sealing efficiency of the gasket.

Buna N (Grade 42 - Nitrile) Max. Temp. 150°F*

Buna N (Grade 42) gaskets are resistant to oil, most aromatic and aliphatic hydrocarbons, natural gas fogging oil, condensates and gasolines.

Buna S (Grade 27) Max. Temp. 212°F*

The compound most generally used for plain gaskets is Buna S (Grade 27). This gasket has wide applications and is accepted as standard for most pipeline use. It is recommended for use on lines transporting both fresh water and salt water, natural and other gases, air, most acids, alkaline and sugar solutions and some refrigerants.

Fluorocarbon - Max. Temp. 350°F

Fluorocarbon gaskets are resistant to hydrocarbons, aromatic hydrocarbons, alcohols, organic acids, nitrogen-containing compounds, vegetable oils and greases.

Butyl -Max. Temp. 250°F

Butyl gaskets are resistant to hot air service, steam, hot water and miscellaneous aqueous solutions. They are also suitable for vegetable oils, organic chemicals, oxidizing acids and alkalies.

EPDM - Max. Temp. 300°F

EPDM gaskets provide excellent resistant to aging factors such as ozone, oxygen and elevated temperatures. This includes service in hot water, steam and dry heat. They are also suitable for handling popular chemicals such as ketones, alcohols, phosphate ester hydraulic fluids, glycols, dilute acids and alkalies.

High Temperature - Max. Temp. 1200°F

These braided flexible gaskets are designed specifically for the high temperature and abrasive atmospheres associated with services such as fly ash handling systems. As a replacement for asbestos, these gaskets are manufactured of a pure homogenous graphite bonded to a fiberglass carrier for strength and thermal durability. The braid over braid construction is die-formed and cut to length to fit proper coupling configurations resulting in a uniform tolerance which has proven itself as a reliable asbestos replacement.

Note: The non-resilient characteristic of this particular gasket material may result in a non leak-proof seal. This should be taken into consideration for this application.

WARNING NOTE: Temperature recommendations are for reference purposes only. Please consult Dresser Engineering for specific recommendations, product style, line content, working pressure and temperature ranges.

For SEVERE Service Conditions, see Dresser Gasket Brochure for complete listing of corrosive content and gasket recommendations.

***For Dresser Styles 65 & 88 Fittings, the maximum temperature is 150°F**

Other DRESSER Piping Products for Water, Wastewater and Industrial Piping Systems

Style 360® Repair Clamps

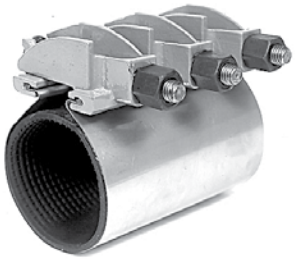

Style 360 Repair Clamps offer simplicity and ease of installation for the repair of holes, splits and cracks for permanent repair of A-C, PVC, cast/ductile iron or steel pipe. You can use it where pipe ends are separated, or where ends are deflected up to 4 degrees or 1/8 inch. Clamp features include a tapered gasket with a gridded design and the spanner molded into the gasket to prevent "hang up." The "360" has a stainless band, lugs of rugged epoxy-coated ductile iron, special one-inch long nuts for use with a standard deep socket wrench, and bolts of corrosion-resistant Dresserloy (stainless steel optional).

Style 91 Service Saddles

Style 91 Service Saddles are made with high grade ductile iron bodies with either zinc-plated steel stirrups or stainless steel straps. Style 91 saddles are designed to shape themselves to the pipe during installation for maximum support, and to eliminate loading stresses. This allows the saddle to accommodate an exceptionally wide range of pipe materials and sizes. Style 91 saddles are available in single or double strap configurations and are furnished with 1/2" thru 2" NPT tapped bodies.

Custom Fabrication

DRESSER offers custom fabrication and engineering expertise making **Dresser Piping Specialties** your ideal solutions provider for unique piping requirements. Shown at right is an offset reducing coupling custom designed to join a 56" O.D. pipeline to a 57-5/8" O.D. pipeline with a 14-3/8" parallel offset. This Dresser coupling eliminated the need to excavate and realign two water tanks and connecting pipelines, saving a major New York State water utility customer hours of down time and thousands of dollars in construction costs.

You got a problem? Dresser Has Solutions!

Piping Specialties
Dresser, Inc.
41 Fisher Avenue, Bradford, PA 16701
Phone: (814) 362-9200
Fax: (814) 362-9333
Email: dmdsales@dresser.com

www.dresser.com

© 2009 Dresser, Inc.

FORM CPLG/9-02
REV. 4.09/R2.5M