2010 URBAN WATER MANAGEMENT PLAN

Irvine Ranch Water District
15600 Sand Canyon Avenue
Irvine, CA 92618

JUNE 2011

IRVINE RANCH WATER DISTRICT

2010 URBAN WATER MANAGEMENT PLAN
CONTACT SHEET

Date Submitted to Department of Water Resources	June 21, 2011
Name of person responsible for this plan	Kellie Welch
Phone	(949) 453-5604
Fax	(949) 453-0228
E-mail address	welch@irwd.com
The water supplier is a	Special District
The water supplier is a	Retailer
Utility services provided by the water supplier	Water, sewer, recycled water
Is this agency a Bureau of Reclamation Contractor?	No
Is the Agency a State Water Project Contractor?	No

Table of Contents

SECTION 1 PLAN PREPARATION 1
A. Coordination with Appropriate Agencies (§ 10620(d)(2)) 1
B. Required Elements – Plan Adoption, Submittal and Implementation 3
NOTICE OF PUBLIC HEARING 4
SECTION 2 SYSTEM DESCRIPTION 5
A. Climate (§ 10631(a)) 6
B. Population (§ 10631(a)) 6
C. Other demographic factors (§ 10631(a)) 6
D. Land Use and Water Resource Planning 8
SECTION 3 SYSTEM DEMANDS 9
A. Water Use – Past, Current and Future (§ 10631(e)) 9
B. Low Income Projected Water Demands 12
1. Sales to Other Agencies 12
2. Unaccounted for Water 13
C. Water Demand Projections – Wholesale Agency (§ 10631(k) 14
D. SBx7-7 GPCD Baselines and Targets 15
E. IRWD Individual Baseline and Target 15
F. Regional Alliance Target 18
G. Water Use Reduction Plan 18
H. Allocation-Based Rate Structure 18
I. Conservation Programs 19
J. Recycled Water Program 19
SECTION 4 SYSTEM SUPPLIES 21
A. Water Sources (§ 10631(b)) 21
B. Imported Potable Water Supplies 22
C. Non-Potable Water Supplies 22
D. Available Groundwater Sources (§ 10631(b)) 23
E. Groundwater Management Plan (§ 10631(b)(1)) 24
F. Description of Groundwater Basin and Right to Pump (§ 10631(b)(2)) 25
G. IRWD Right to Pump Groundwater 25
H. Identification of Groundwater Basin as Overdrafted (§ 10631(b)(2)) 26
I. Groundwater Pumped Past Five Years (§ 10631(b)(3)) 27
J. Groundwater Projected to be Pumped (§ 10631(b)(4)) 27
K. Transfer Opportunities 29
L. Desalinated Water Opportunities 31
M. Recycled Water 32
N. Wastewater Quantity, Quality and Current Uses 33
O. Potential and Projected Use, Optimization Plan with Incentives 35
P. Encouraging Recycled Water Use 38
Q. Recycled Water Optimization Plan 39

R. Planned Water Supply Projects and Programs (§ 10631(h)) 40
1. Potable Water Supply 40
2. Non-Potable Supply 41
SECTION 5 WATER SUPPLY RELIABILITY AND WATER SHORTAGE CONTINGENCY PLANNING 42
A. Tools to Maximize Resources (§ 10620(f)) 42
B. Stages of Action 43
C. Catastrophic Supply Interruption Plan (§ 10632(c)) 44
D. Mandatory Prohibitions (§ 10632(d)) 46
E. Consumption Reduction Methods (§ 10632(e)) 47
F. Penalties for Excessive Use (§ 10632(f)) 49
G. Analysis of Impacts on Revenue and Expenditure and Measures 49
H. Water Shortage Contingency Ordinance/Resolution (§ 10632(h)) 51
I. Affects of Water Quality (§ 10634) 51
J. Reliability of Supply (§ 10631(c)(1) and 10631(c)(2)) 53
K. Estimate of Minimum Supply for Next Three Years (§ 10632(b)) 57
SECTION 6 DEMAND MANAGEMENT MEASURES 62
A. BMP Implementation 63
B. GPCD Compliance Option 63
C. IRWD's CUWCC Baseline 64
D. IRWD's CUWCC GPCD Targets 64
E. Demand Management Measure Implementation 65
1. Retail Pricing 65
2. Tactical Incentives for Water Efficient Devices 66
3. Commercial/Industrial Performance-Based Program 67
4. Landscape Water Use Efficiency 67
5. Workshops and Tours 67
6. Rules and Regulations 67
7. Free Water Use Surveys 68
8. Public Outreach and Social Media 68
9. Education Programs 68
10. Water Loss Control 69
11. Incentive Pricing 69
12. Regional Conservation Programs 69
SECTION 7 CLIMATE CHANGE 70
SECTION 8 COMPLETED UWMP CHECKLIST 72
APPENDIX A REFERENCE DOCUMENTS 73
APPENDIX B RESOLUTION No. 2011-19 75
APPENDIX C LETTERS TO CITIES AND COUNTY 76
APPENDIX D SBx7-7 GPCD CALCULATION 77
APPENDIX E RESOLUTION NO. 2009-5 78
APPENDIX F CUWCC BMP COVERAGE REPORTS 79

SECTION 1 PLAN PREPARATION

Law

> 10620 (a) Every urban water supplier shall prepare and adopt an urban water management plan in the manner set forth in Article 3 (commencing with Section 10640).
>
> 10620 (d) (2) Each urban water supplier shall coordinate the preparation of its plan with other appropriate agencies in the area, including other water suppliers that share a common source, water management agencies, and relevant public agencies, to the extent practicable.
>
> 10621(b) Every urban water supplier required to prepare a plan pursuant to this part shall, at least 60 days prior to the public hearing on the plan required by Section 10642, notify any city or county within which the supplier provides water supplies that the urban water supplier will be reviewing the plan and considering amendments or changes to the plan. The urban water supplier may consult with, and obtain comments from any city or county that receives notice pursuant to this subdivision.
>
> 10635(b) The urban water supplier shall provide that portion of its urban water management plan prepared pursuant to this article to any city or county within with it provides water supplies no later than 60 days after the submission of its urban water management plan.

Irvine Ranch Water District ("IRWD", "District") is a multi-service agency responsible for providing domestic water service, sewage collection, advanced wastewater treatment and water recycling for a 181-square mile service area in south central Orange County. IRWD provides water service to approximately 338,000 county residents.

This Urban Water Management Plan ("Plan") of the Irvine Ranch Water District has been prepared in response to the Urban Water Management Planning Act (Water Code), Water Code Sections 10610 through 10656, which were added by Statute 1983, Chapter 1009, and became effective on January 1, 1984. The Act requires that "every urban water supplier providing water for municipal purposes either directly or indirectly to more than 3,000 customers or supplying more than 3,000 acre-feet of water annually to prepare and adopt an urban water management plan." Several sources of information were referenced in preparation of this Plan as listed under Appendix A.

A. Coordination with Appropriate Agencies (§ 10620(d)(2))

IRWD is the largest member agency of the Municipal Water District of Orange County (MWDOC) in terms of service area and overall water use. MWDOC is a wholesale importer of water from the Metropolitan Water District of Southern California (MWD). MWDOC serves all of Orange County except for the cities of Anaheim, Fullerton and Santa Ana. IRWD coordinated the update of this plan in participation with MWDOC. References are made in a more general aspect to the Regional Urban Water Management Plans (RUWMP) prepared by both the MWD and MWDOC.

SECTION 1 PLAN PREPARATION

On February 3, 2011, IRWD notified all of the cities within IRWD's service area and the County of Orange of the opportunity to submit comments regarding the UWMP during the update process. IRWD did not receive any comments on the UWMP 2010 update.

IRWD prepared the 2010 update using its own staff in coordination with the other agencies as indicated. IRWD staff utilized the Department of Water Resources (DWR) "Guidebook to Assist Urban Water Suppliers to Prepare a 2010 Urban Water Management Plan."

Table 1 below shows plan coordination with appropriate agencies.

Coordinating Agencies[1,2]	Participated in updating the plan	Opportunity to Comment on the draft	Attended public meetings	Was contacted for assistance	Was sent a copy of the draft plan	Was sent a notice of intention to adopt
MWDOC	X	X		X	X	X
Cities of Irvine, Tustin, Lake Forest, Newport Beach, Orange, Costa Mesa		X				X
County of Orange		X				X

[1] *Indicate the specific name of the agency with which coordination or outreach occurred.*

[2] *Check at least one box in each row.*

Law

> 10642 Each urban water supplier shall encourage the active involvement of diverse social, cultural, and economic elements of the population within the service area prior to and during the preparation of the plan. Prior to adopting a plan, the urban water supplier shall make the plan available for public inspection and shall hold a public hearing thereon. Prior to the hearing, notice of the time and place of hearing shall be published within the jurisdiction of the publicly owned water supplier pursuant to Section 6066 of the Government Code. The urban water supplier shall provide notice of the time and place of hearing to any city or county within which the supplier provides water supplies. After the hearing, the plan shall be adopted as prepared or as modified after the hearing.
>
> 10643 An urban water supplier shall implement its plan adopted pursuant to this chapter in accordance with the schedule set forth in its plan.
>
> 10644(a) An urban water supplier shall submit to the department, The California State Library, and any city or county within which the supplier provides water supplies a copy of its plan no later than 30 days after adoption. Copies of amendments or changes to the plans shall be submitted to the department, the California State Library, and any city or county within which the supplier provides water supplies within 30 days after adoption.
>
> 10645 Not later than 30 days after filing a copy of its plan with the department, the urban water supplier and the department shall make the plan available for public review during normal business hours.

B. Required Elements – Plan Adoption, Submittal and Implementation

The Urban Water Management Planning Act requires that IRWD file an update to its 2005 Urban Water Management Plans. The IRWD 2010 Urban Water Management Plan was prepared in accordance with the requirement that urban water purveyors submit a plan to the Department of Water Resources, addressing water supply and demands, conservation measures, and water recycling among other things. IRWD prepared previous plans in 1985, 1990, 1995, 2000 and 2005. Several legislative amendments have been made to the Act since the last submission of 2005 and this UWMP update incorporates all of the new requirements.

This Urban Water Management Plan (Plan) serves as an update to IRWD's 2005 plan. A public hearing was held on June 13, 2011 and no comments were received from the public. Following the public hearing the UWMP was adopted by IRWD's Board of Directors on June 13, 2011 (See Resolution 2011-19 under Appendix B).

This update was submitted to the California Department of Water Resources and California State Library on June 21, 2011, within 30 days of approval by the IRWD Board of Directors.

During the preparation of the UWMP, IRWD notified, in writing, all of the cities within IRWD's service area and the County of Orange of IRWD's update to the plan and provided the opportunity for the cities and county to submit comments during the update process. As required, this notification was dated February 3, 2011, more than 60 days prior to the public hearing date of June 13, 2011. Copies of the letters notifying the cities and county are included under Appendix C. IRWD did not receive any comments from the cities or county with regards to the 2010 update.

On May 30, 2011, IRWD published the following notice in the Orange County Register that it will hold a public hearing on June 13, 2011. The draft UWMP was made available for public review on IRWD's website at www.irwd.com and through request at IRWD's offices.

On June 22, 2011, copies of the adopted UWMP were sent to the cities within IRWD's service area and the County of Orange and were made available to the public within 30 days following Board approval. In addition, IRWD has provided the adopted UWMP available on IRWD's website www.irwd.com.

NOTICE OF PUBLIC HEARING

IRVINE RANCH WATER DISTRICT ADOPTION OF
2010 URBAN WATER MANAGEMENT PLAN

Notice is hereby given that the Board of Directors of Irvine Ranch Water District will conduct a public hearing at 5:00 p.m. on June 13, 2011, in the District office located at 15600 Sand Canyon Avenue, Irvine, California for the purpose of receiving public comments concerning the proposed adoption of IRWD's 2010 Urban Water Management Plan, as required under the California Urban Water Management Planning Act. Any person desiring to make comments or present information to the Board may make an oral presentation at the public hearing or may submit written comments or information for the Board's consideration by delivering them to the District office prior to the time of the hearing. A draft of the Plan is available for review on IRWD's Web site (www.irwd.com) or at the District office at the above address.

Leslie Bonkowski
District Secretary

SECTION 2 SYSTEM DESCRIPTION

Law

10630. It is the intention of the Legislature, in enacting this part, to permit levels of water management planning commensurate with the numbers of customers served and the volume of water supplied.

10631(a) Describe the service area of the supplier, including current and projected population, climate, and other demographic factors affecting the supplier's water management planning. The projected population estimates shall be based upon data from the state, regional, or local service agency population projections within the service area of the urban water supplier and shall be in five-year increments to 20 years or as far as data is available.

The Irvine Ranch Water District, a California Water District, was formed in 1961 and is located in the south central portion of Orange County. IRWD provides potable and non-potable water supply, wastewater collection, treatment and disposal, and wastewater reclamation. IRWD overlies much of the old Irvine Ranch property and includes all of the City of Irvine and portions of the surrounding jurisdictional agencies such as the cities of Tustin, Santa Ana, Orange, Costa Mesa, Lake Forest, Newport Beach, and unincorporated areas of the County of Orange. Currently, IRWD encompasses a 181-square mile service area with an estimated population of 338,000.

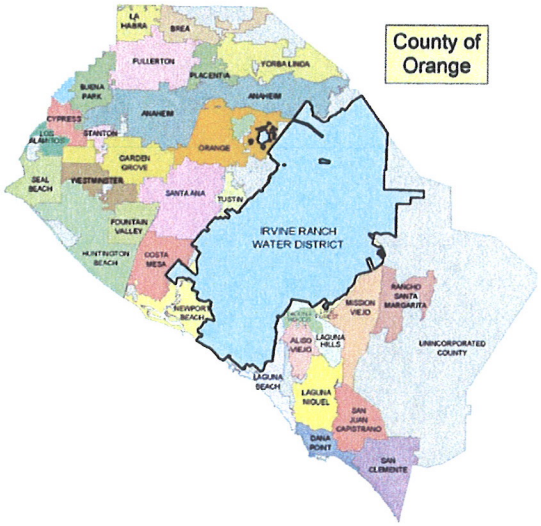

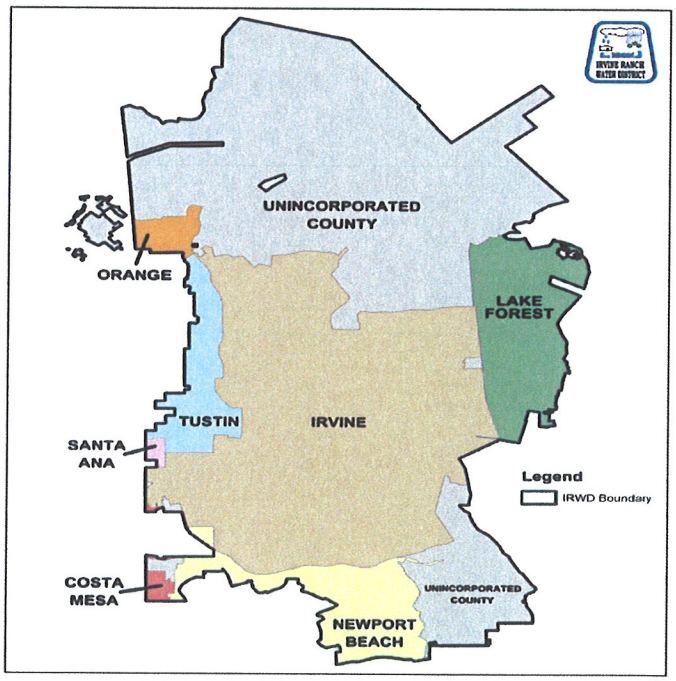

In 1997, IRWD acquired neighboring Santa Ana Heights Mutual Water Company with approximately 2,800 connections. In 2001, IRWD merged on the east boundary with the Los Alisos Water District with approximately 12,400 connections. In 2006, IRWD merged with Santiago Water District with 740 connections. In 2008, IRWD merged with Orange Park Acres Mutual Water Company with 530 connections. IRWD's current records show 99,969 connections serve 77,830 acre-feet of water annually.

A. Climate (§ 10631(a))

IRWD's service areas have a generally mild and relatively uniform climate with an average rainfall in the area of 14.2 inches. The table below shows average climate characteristics for the IRWD service area.

IRWD Average Climate						
	Jan.	*Feb*	*March*	*April*	*May*	*June*
Monthly Average ETo	2.12	2.26	3.42	4.65	4.98	5.59
Average Rainfall	2.997	4.3	2.36	1.08	0.47	0.1
Average Temperature	56.1	56.9	57.8	59.0	65.8	65.5
	July	*Aug*	*Sept*	*Oct*	*Nov*	*Dec*
Monthly Average ETo	6.03	6.06	4.55	3.49	2.43	2.13
Average Rainfall	0.0	0.005	0.22	0.27	1.39	1.66
Average Temperature	69.9	68.9	71.2	62.0	56.7	56.2

ET and Rainfall are reported in inches; Temperature is degrees in Fahrenheit.

B. Population (§ 10631(a))

IRWD, once largely an agricultural community, is continuing to undergo municipal and industrial development with vacant land and farmland being urbanized each year. IRWD's current population of 337,876 is approximately 75% of the ultimate projected population estimated at 446,633 for 2035. Population projections in Table 2 are referenced from IRWD's Water Resources Master Plan (WRMP) and are used in water demand calculations. The data source for IRWD's population statistics is the Center for Demographic Research, California State University, Fullerton (2010) using the California State Department of Finance population data.

Table 2
Population — current and projected

	2010	2015	2020	2025	2030	2035	Data source[2]
Service area population[1]	337,876	359,627	381,379	403,130	424,882	446,633	Center for Demographic Research at Cal State Fullerton

[1] Service area population is defined as the population served by the distribution system. See Technical Methodology 2: Service Area Population (2010 UWMP Guidebook, Section M).

[2] Provide the source of the population data provided.

C. Other demographic factors (§ 10631(a))

Housing

The majority of the development within the IRWD service area follows the City of Irvine General Plan first adopted in 1973 and amended several times since then. The remainder of the service area follows the appropriate jurisdictional agency's General Plan or projections from the County of

Orange. These plans establish a guideline for land use development within the IRWD service area and serve to coordinate the timing of future growth. The model used to forecast IRWD water demands calculates existing and future population estimates by multiplying the number of dwelling units in each density category by the number of persons per dwelling unit for that category (see Land Use and Water Resource Planning below). The major characteristic of IRWD's service area includes the concept of residential villages with a wide range of housing products and densities and very low-density residential development in the rugged, more environmentally sensitive foothills.

Industrial and Commercial Activities

Industrial and commercial development within IRWD is concurrent with residential development. The jurisdictional agencies' General Plans define industrial and commercial development within the IRWD service area. These developments consist of regional commercial centers with high-rise buildings, major business and industrial complexes located along the eastern and western edges of IRWD.

IRWD's Lake Forest service area (formerly Los Alisos Water District) is zoned for approximately 2/3 residential and 1/3 commercial development. Existing development is primarily single-family residential with some multi-family residential, office space, commercial industrial and open space. The industrial and commercial development provide a wide range of services such as manufacturing, assembly, research and development, high technology, aerospace, professional services, biomedical and warehouse operations among others. Currently, the City of Lake Forest is proposing to develop 950 acres (commercial and residential) of vacant land which is adjacent to the former Marine Corps Air Station at El Toro.

In late 2001, the Irvine Company (the major land owner in IRWD) announced the planned dedication of a large area as permanent open space. The majority of this land is located in the northwestern portion of IRWD (City of Orange sphere of influence), with an additional area near Laguna Canyon Road. Based on this change, IRWD has made appropriate reductions in its demand calculations.

Institutional and Others

(1) University of California, Irvine and its inclusion area

The University of California, Irvine (UCI) main campus occupies 1,489 acres within the south-central part of IRWD. The present student population is about 28,000 with approximately 10,100 faculty and staff. There is a projected UCI build-out population of approximately 35,000 students and 14,000 faculty and staff. IRWD participates with UCI on its Subarea Master Planning to determine the effects of planned improvements on IRWD's water, reclamation and sewer systems.

(2) Marine Corps Air Stations, El Toro and Tustin

In 1999, the Marine Corps stations located at the eastern (El Toro) and western (Tustin) portion of IRWD closed as part of the Federal Base Realignment and Closure process. Redevelopment and reuse alternatives have been prepared for both bases and IRWD has prepared various levels of planning studies for these plans. For the Tustin base property, IRWD is relying on land use plans prepared by the City of Tustin as the redevelopment

authority. The El Toro base property, formerly within the unincorporated County of Orange, was recently annexed to the City of Irvine and IRWD has included project water demands based on the City's proposed land use plan for the base property.

D. Land Use and Water Resource Planning

The basis for the preparation of the UWMP is IRWD's principal water management planning document, the Water Resources Master Plan ("WRMP"). IRWD's WRMP describes both the potable and nonpotable systems and provides a basis for future IRWD water resource planning. The WRMP is a comprehensive document compiling data and analysis, including current and future land uses, that IRWD considers necessary for its planning needs. The WRMP provides identification of an optimum mix of water resourses to meet normal and emergency requirements which prioritizes local supplies verses imported supplies.

The foundation for IRWD's WRMP is the compilation of land use data. For IRWD, this required interfacing with multiple jurisdictions and developing a land use database using GIS. Computerized GIS to the master planning process enables more detailed categorization of residential land use to better match residential land use by jurisdictional agency. Land use data was used in conjunction with updated water use factors to estimate water requirements through development of a "demand forecasting tool." Appropriate GIS layers were established to segregate demands for system and storage evaluations. These evaluations were based on system criteria, which were reviewed in detail and updated as part of the planning effort.

Included in the WRMP, IRWD employs water use factors to enable it to assign water demands to various land use types and aggregate the demands. The water use factors are based on average water use and incorporate the effect of IRWD's tiered-rate conservation pricing and its other water conservation programs. The factors are derived from historical usage (billing data) and a detailed review of water use factors within the IRWD services areas conducted as part of the WRMP.

IRWD also relies on statements and conclusions from MWD and MWDOC's RUWMP, IRWD's wholesale water suppliers, for its water supply management and reliability of imported supplies.

As a sub-member agency of MWD, IRWD is aware of imported water challenges that face the future and it is within this context that IRWD's future water resource development plan has been fashioned. For many years, IRWD's potable water system relied on imported water supplies from MWD; however, in an effort to increase local supply reliability, IRWD developed the Dyer Road well field in 1979. To further offset the need for imported water for nonpotable uses, IRWD expanded its recycled water program. IRWD's water resources program relies on further maximizing local resources to meet demands through increased recycled water use, increased groundwater development, groundwater treatment, and groundwater banking. IRWD's planning documents, including implementation of the UWMP, describe plans to diversify water supplies including maximizing groundwater development, expansion of IRWD's Michelson Water Reclamation Plant treatment capacity (which IRWD is currently undergoing), and the development of water banking facilities in the Kern County area to provide a supplemental water supply for future dry periods of when supplies may be restricted.

SECTION 3 SYSTEM DEMANDS

Law

10631. A plan shall be adopted in accordance with this chapter and shall do all of the following:

10631 (e) (1) Quantify, to the extent records are available, past and current water use, over the same five-year increments described in subdivision (a), identifying the uses among water use sectors including, but not necessarily limited to, all of the following uses:

(A) Single-family residential; (B) Multifamily; (C) Commercial; (D) Industrial; (E) Institutional and governmental; (F) Landscape; (G) Sales to other agencies; (H) Saline water intrusion barriers, groundwater recharge, or conjunctive use, or any combination thereof; and (I) Agricultural.

10631.1 (a) The water use projections required by Section 10631 shall include project water use for single-family and multifamily residential housing needed for lower income households, as defined in Section 50079.5 of the health and Safety Code, as indentified in the housing element of any city, county or city and county in the service area of the supplier

A. Water Use – Past, Current and Future (§ 10631(e))

All connections for IRWD are metered. Each single-family dwelling unit and many townhouses and condominiums have individual meters. Apartments and some condominiums average 15 - 20 units per meter. The majority of irrigation use within IRWD is served with recycled water; and irrigation uses such as schools, parks, greenbelt, medians, homeowner association areas, etc. are classified under Landscape. Past, current and projected data on water use within IRWD from 2000 to 2035 is provided in Tables 3 through 7 below. Current information is based on monthly records of water sales throughout the service area. Water use in 2010 in Table 4 is lower than anticipated due a combination of the economy, regional drought messaging and a cool, mild summer in 2010. The "Other" category includes temporary construction, fire line and lake filling.

Table 3
Water deliveries — actual, 2005

	2005				
	Metered		Not metered		Total
Water use sectors	# of accounts	Volume	# of accounts	Volume	Volume
Single family	73,726	25,812	0	0	25,812
Multi-family	2,247	4,993	0	0	4,993
Commercial	3,494	7,663	0	0	7,663
Industrial	877	6,047	0	0	6,047
Institutional/governmental	223	2,842	0	0	2,842
Landscape	5,609	23,422	0	0	23,422
Agriculture	20	7,455	0	0	7,455
Other	194	1,453	0	0	1,453
Total	86,390	79,688	0	0	79,688

Units (circle one): *acre-feet per year* *million gallons per year* *cubic feet per year*

Table 4 Water deliveries — actual, 2010					
	2010				
	Metered		Not metered		Total
Water use sectors	# of accounts	Volume	# of accounts	Volume	Volume
Single family	81,689	26,130	0	0	26,130
Multi-family	2,606	5,590	0	0	5,590
Commercial	4,944	7,735	0	0	7,735
Industrial	861	4,744	0	0	4,744
Institutional/governmental	281	2,293	0	0	2,293
Landscape	6,454	24,221	0	0	24,221
Agriculture	61	6,904	0	0	6,904
Other	3,073	212	0	0	212
Total	99,969	77,830	0	0	77,830

Units (circle one): *acre-feet per year* *million gallons per year* *cubic feet per year*

Table 5 Water deliveries — projected, 2015					
	2015				
	Metered		Not metered		Total
Water use sectors	# of accounts	Volume	# of accounts	Volume	Volume
Single family	90,086	28,816	0	0	28,816
Multi-family	5,756	12,348	0	0	12,348
Commercial	2,978	4,659	0	0	4,659
Industrial	2,284	12,586	0	0	12,586
Institutional/governmental	257	2,101	0	0	2,101
Landscape	8,333	31,272	0	0	31,272
Agriculture	90	10,191	0	0	10,191
Total	109,785	101,972	0	0	101,972

Units (circle one): *acre-feet per year* *million gallons per year* *cubic feet per year*

Table 6
Water deliveries — projected, 2020

	2020				
	Metered		Not metered		Total
Water use sectors	# of accounts	Volume	# of accounts	Volume	Volume
Single family	101,885	32,590	0	0	32,590
Multi-family	6,910	14,822	0	0	14,822
Commercial	3,277	5,127	0	0	5,127
Industrial	2,472	13,622	0	0	13,622
Institutional/governmental	295	2,404	0	0	2,404
Landscape	9,646	36,202	0	0	36,202
Agriculture	57	6,485	0	0	6,485
Total	124,542	111,252	0	0	111,252

Units (circle one): *acre-feet per year* *million gallons per year* *cubic feet per year*

Table 7
Water deliveries — projected 2025, 2030, and 2035

	2025		2030		2035	
	metered		metered		metered	
Water use sectors	# of accounts	Volume	# of accounts	Volume	# of accounts	Volume
Single family	108,948	34,849	111,773	35,753	114,584	36,652
Multi-family	7,954	17,061	8,197	17,584	8,416	18,053
Commercial	3,487	5,455	3,487	5,455	3,488	5,458
Industrial	2,597	14,307	2,562	14,119	2,530	13,941
Institutional/governmental	325	2,650	320	2,614	316	2,581
Landscape	10,565	39,650	10,755	40,362	10,945	41,074
Agriculture	38	4,318	29	3,303	20	2,314
Total	133,913	118,291	137,124	119,191	140,301	120,073

Units (circle one): *acre-feet per year* *million gallons per year* *cubic feet per year*

B. Low Income Projected Water Demands

Pursuant to Section 10631.1(1), IRWD has projected water use for single family and multi-family residential housing needed for lower income households as identified in the housing elements of the cities of Irvine, Tustin, Lake Forest and Orange, of which portions of these cities are served by IRWD.

Table 8
Low-income projected water demands

Low Income Water Demands[1]	2015	2020	2025	2030	2035
Single-family residential	6,253	7,072	7,562	7,758	7,953
Multi-family residential	2,679	3,216	3,702	3,816	3,918
Total	8,932	10,288	11,265	11,574	11,871

Units (circle one): *acre-feet per year* *million gallons per year* *cubic feet per year*

[1]Provide demands either as directly estimated values or as a percent of demand.

1. Sales to Other Agencies

IRWD has an agreement with neighboring Santa Margarita Water District (SMWD) to deliver excess recycled water. IRWD wholesales only surplus recycled water to SMWD on an as needed basis. In addition, IRWD also wholesales recycled water to the Orange County Water District (OCWD) Green Acres Project (GAP) on an as needed basis during the months from October through March. Additionally, IRWD purchases imported potable water from MWD which is sold to the Trabuco Canyon Water District for its service area. Table 9 below shows IRWD's projected sales to other water agencies.

Table 9
Sales to other water agencies

Water distributed	2005	2010	2015	2020	2025	2030	2035
Santa Margarita Water District	443	357	1,500	1,500	1,500	1,500	1,500
GAP	2,651	1,725	1,200	1,200	1,200	1,200	1,200
Trabuco Canyon Water District	192	174	183	183	183	183	183
Total	3,286	2,256	2,883	2,883	2,883	2,883	2,883

Units (circle one): *acre-feet per year* *million gallons per year* *cubic feet per year*

2. Unaccounted for Water

Table 10 shows IRWD's past, current and projected unaccounted for water. IRWD has recently consolidated with areas of older systems which has resulted in increases in the water losses. IRWD is aggressively working to upgrade these older distribution systems to minimize future losses.

Table 10
Additional water uses and losses

Water use[1]	2005	2010	2015	2020	2025	2030	2035
Saline barriers							
Groundwater recharge							
Conjunctive use							
System losses	3,209	8,386	5,099	5,563	5,915	5,960	6,004
Evaporation	39	2,131	1,555	1,697	1,803	1,817	1,831
Total	3,248	10,517	6,654	7,260	7,718	7,777	7,835

Units (circle one): acre-feet per year million gallons per year cubic feet per year
[1]Any water accounted for in Tables 3 through 7 are not included in this table.

IRWD's total water use past and projected future is summarized in Table 11.

Table 11
Total water use

Water Use	2005	2010	2015	2020	2025	2030	2035
Total water deliveries (from Tables 3 to 7)	79,688	77,830	101,972	111,252	118,291	119,191	120,073
Sales to other water agencies (from Table 9)	3,286	2,256	1,683	1,683	1,683	1,683	1,683
Additional water uses and losses (from Table 10)	3,248	10,517	6,654	7,260	7,718	7,777	7,835
Total	86,222	90,602	110,309	120,196	127,692	128,651	129,592

Units (circle one): acre-feet per year million gallons per year cubic feet per year

Law

> 10631 (k) Urban water suppliers that rely upon a wholesale agency for a source of water shall provide the wholesale agency with water use projections from that agency for that source of water in five-year increments to 20 years or as far as data is available. The wholesale agency shall provide information to the urban water supplier for inclusion in the urban water supplier's plan that identifies and quantifies, to the extent practicable, the existing and planned sources of water as required by subdivision (b), available from the wholesale agency to the urban water supplier over the same five-year increments, and during various water-year types in accordance with subdivision (c). An urban water supplier may not rely upon water supply information provided by the wholesale agency in fulfilling the plan informational requirements of subdivisions (b) and (c) (10631(k)).

C. Water Demand Projections – Wholesale Agency (§ 10631(k)

As stated, IRWD purchases water through MWDOC from the MWD. MWDOC is a wholesale importer of water from MWD. IRWD coordinates closely with MWDOC on its projected water demands on a regular basis. In addition, IRWD purchases some water through the East Orange County Water District (EOCWD) which is also a wholesale importer of water from MWD. Table 12 provides IRWD's demand projections provided to its wholesale suppliers MWDOC and EOCWD. These projections do not represent IRWD's total connected delivery capacity through MWD and MWDOC. Total connected capacity is shown under "contracted volume."

Table 12
Retail agency demand projections provided to wholesale suppliers

Wholesaler	Contracted Volume	2010	2015	2020	2025	2030	2035
MWD/MWDOC	74,178	27,618	16,116	17,004	18,920	19,666	19,589
EOCWD		200	25	25	25	25	25

Law

> 10608.20(e). An urban retail water supplier shall include in its urban water management plan...due in 2010 the baseline daily per capita water use, urban water use target, interim urban water use target, and compliance daily per capita water use, along with the bases for determining those estimates, including references to supporting data.
>
> 10608.36. Urban wholesale water suppliers shall include in the urban water management plans...an assessment of their present and proposed future measures, programs, and policies to help achieve the water use reductions required by this part (10608.36).
>
> Urban retail water suppliers are to prepare a plan for implementing the Water Conservation Bill of 2009 requirements and conduct a public meeting which includes consideration of economic impacts (CWC §10608.26).

D. SBx7-7 GPCD Baselines and Targets

IRWD is required to calculate and report on its baseline per capita water use, 2020 water use target and interim target in order to comply with the Water Conservation Act of 2009. IRWD, as a retail agency has the option of complying individually or participating in a Regional Alliance. IRWD has chosen to participate in a Regional Alliance with the Municipal Water District of Orange County. The Regional Alliance calculation is based on the first option allowed, and provides maximum flexibility. Each individual agency calculates its own individual target, as if it were complying individually. The individual targets for each agency are then weighted by the supplier's population to develop a regional target. In the event that the region does not comply with the regional target, an agency may still be in compliance if it meets its own individual target. Based on this approach, IRWD is including two sets of information and tables related to compliance with the Water Conservation Act of 2009: i) IRWD's Individual Target, and ii) Regional Alliance Target. In both cases, the 2020 target is calculated using Method 1, which is eighty percent of the baseline per capita water use. IRWD's application of the Technical Methodologies and bases for determining the individual targets, are shown in Appendix D SBx7-7 GPCD Calculation.

E. IRWD Individual Baseline and Target

As shown in Table 13 below, IRWD's base period is a 15-year range, beginning July 1, 1990 and ending June 30, 2005. All of IRWD's water use data is reported on a fiscal year basis (July 1 – June 30). IRWD is eligible to use a 15-year baseline since the volume of recycled water deliveries in 2008 was more than 10%. IRWD delivered 16,566.1 acre-feet of recycled water from total deliveries of 97,215.5 acre-feet in 2008, or 17% of total deliveries.

Table 13 Base period ranges			
Base	**Parameter**	**Value**	**Units**
10- to 15-year base period	2008 total water deliveries	97,215.5	acre-feet/year
	2008 total volume of delivered recycled water	16,566.1	acre-feet/year
	2008 recycled water as a percent of total deliveries	17%	percent
	Number of years in base period[1]	15	years
	Year beginning base period range	1990	
	Year ending base period range[2]	2005	
5-year base period	Number of years in base period	5	years
	Year beginning base period range	2003	
	Year ending base period range[3]	2007	

[1]If the 2008 recycled water percent is less than 10 percent, then the first base period is a continuous 10-year period. If the amount of recycled water delivered in 2008 is 10 percent or greater, the first base period is a continuous 10- to 15-year period.

[2]The ending year must be between December 31, 2004 and December 31, 2010.

[3]The ending year must be between December 31, 2007 and December 31, 2010.

IRWD's annual daily per capita use for the baseline period is shown in Table 14. IRWD's individual base daily per capita use over the 15-year base period is 213. Applying Method 1, an 80% reduction from the baseline, IRWD's individual 2020 target is 170 gpcd. IRWD's 2015 interim target, which is the midpoint between the baseline and the 2020 target, is 192 gpcd.

Table 14 Base daily per capita water use — 10- to 15-year range				
Base period year		**Distribution System Population**	**Daily system gross water use (mgd)**	**Annual daily per capita water use (gpcd)**
Sequence Year	**Fiscal Year Ending**			
Year 1	2005	298,306	57	190
Year 2	2004	286,439	60	211
Year 3	2003	278,603	55	197
Year 4	2002	268,998	59	221
Year 5	2001	257,714	58	226
Year 6	2000	250,574	60	241
Year 7	1999	242,816	56	229
Year 8	1998	237,055	49	207
Year 9	1997	231,284	56	243
Year 10	1996	225,982	50	222

Year 11	1995	222,058	46	206
Year 12	1994	219,040	44	203
Year 13	1993	215,469	42	195
Year 14	1992	210,357	41	194
Year 15	1991	204,798	44	216
			Base Daily Per Capita Water Use[1]	213

[1]Add the values in the column and divide by the number of rows.

IRWD also calculated a 5% reduction from a 5-year baseline to ensure that its calculated target meets or exceeds the minimum reduction requirement. The 5-year range selected cannot end earlier than 2004. For purposes of this calculation, IRWD selected a 5-year base period beginning July 1, 2003 and ending June 30, 2007

Table 15

Base daily per capita water use — 5-year range

Base period year		Distribution System Population	Daily system gross water use (mgd)	Annual daily per capita water use (gpcd)
Sequence Year	Fiscal Year Ending			
Year 1	2007	315,848	67	213
Year 2	2006	307,663	58	190
Year 3	2005	298,306	57	190
Year 4	2004	286,439	60	211
Year 5	2003	278,603	55	197
			Base Daily Per Capita Water Use[1]	200

[1]Add the values in the column and divide by the number of rows.

IRWD's average annual per capita daily use over the selected 5-year base period is 200 gpcd. A 5% reduction from this would result in a target of 190 gpcd in 2020. IRWD is required to use the lower of the two targets. Therefore, the 15-year baseline targets calculated using Method 1, with a 2020 target of 170 gpcd, and a 2015 interim target of 192 gpcd are IRWD's individual targets.

Summary of IRWD's Individual Target Calculations

SBx7-7 Calculations	GPCD
15 Year Baseline Average FY90/91-04/05	213
2015 Interim Target	192
IRWD Individual 2020 Target Method 1	**170**
5 year Average 2003-2007	200
0.95 x 5-Year Average	190

F. Regional Alliance Target

IRWD is participating in the Municipal Water District of Orange County's (MWDOC) Regional Alliance for purposes of compliance with SBx7-7. As stated above, the approach being taken is based on the population weighted averages of the individual supplier's 2020 targets. The basis for the Regional Alliance target calculation is included in MWDOC's Regional Urban Water Management Plan (RUWMP). If different, the Regional Alliance targets stated in MWDOC's Plan supersede those shown below.

Urban Water Use Targets for Orange County 20x2020 Regional Alliance

	2015 Target	2020 Target
Orange County 20x2020 Regional Alliance	174	157

G. Water Use Reduction Plan

IRWD will rely on a continuation of its existing, highly effective demand management strategies to ensure that it meets its interim and 2020 targets, in a way that minimizes negative economic impacts and targets all customer sectors. Those strategies discussed in more detail below include:

- Allocation-Based Rate Structure
- Conservation Programs
- Recycled Water Program
- Regional Investment in Indirect Potable Reuse

H. Allocation-Based Rate Structure

Water resource stewardship has been a hallmark of IRWD since its inception. The District set an aggressive tone to promote the efficient use of all water resources beginning in the late 1980's and into the drought of the early 1990's. This effort, which included intensive communication with the various customer groups and some of the first home water audit and ultra low flush toilet programs in the state, culminated in the adoption of an allocation-based tiered rate structure by the IRWD Board in 1991. IRWD's rate structure successfully promotes ongoing conservation and provides the District with revenue stability. It provides a revenue source for IRWD's water use efficiency programs, while providing customers with among the lowest rates in Orange County.

The basis for the allocations were reviewed and updated in 2009 to reflect changes in plumbing codes and newer water-saving devices and practices. The rate structure is a foundational tool in IRWD's successful water use efficiency programs, and has resulted in significant water use reductions. A 2008 Kennedy/Jenks study of IRWD's rate structure concluded that it resulted in a 7% reduction in residential demand, and a 31.5% reduction in landscape water use. Secondary benefits include reductions in urban runoff flows, energy savings and reduced green house gas (GHG) emissions. Additional details on IRWD's allocation-based rate structure are included in Section 6-Demand Management Measures.

I. Conservation Programs

IRWD and our customers have always understood that smart water use needs to be our way of life in Southern California, in wet and drought years alike. We are committed to providing the most cutting-edge water use efficiency programs. Over the decades we've worked to become even wiser about using water. We encourage our customers – as well as our partners, vendors, suppliers, and employees – to use water wisely.

IRWD implements a wide-range of conservation programs, designed to target all customer sectors. Programs are developed to be consistent with the objectives of IRWD's Water Conservation Business Plan, adopted in 2005. They are continually evaluated to maximize water savings, and modified to integrate the latest water efficient technologies and practices. IRWD intends to continue implementation of effective demand reduction programs as part of its overall strategy to meet its 2020 target. Specific programs are discussed in Section 6 - Demand Management Measures.

J. Recycled Water Program

Irvine Ranch Water District (IRWD) is a recognized leader in water use efficiency as evidenced by the District's pioneering water recycling program which began in the late 1960's. Water recycling is an essential component of our water supply portfolio, as any demand met with recycled water reduces the demand for high-quality drinking water. IRWD meets approximately 23% of its total demands with recycled water, thereby reducing demands for potable, imported water. The use of recycled water extends our drinking water supplies, reduces the need for additional potable water facilities, reduces the amount of treated wastewater discharged into the ocean, reduces our reliance on costly imported water supplies, and increases our water supply reliability.

The primary uses of recycled water are agricultural and landscape irrigation including parks, school grounds, golf courses, freeway landscaping and irrigation of common areas managed by homeowner associations. IRWD continues to seek opportunities to expand the use of recycled water, and now it is also used for front and backyard irrigation in large residential lots, for industrial processes, and for toilet flushing and cooling towers in dual-plumbed office buildings.

IRWD's expansion of the Michelson Water Recycling Plant from 18 million gallons per day (mgd) to 28 mgd is part of IRWD's proactive long-term planning. The expansion project began in 2009, and is expected to be completed in 2012. It will assist IRWD in providing water for future needs, while decreasing dependence on imported water. The increased use of recycled water will ensure that IRWD is able to comply with its 2020 gpcd targets.

Regional Investment in Indirect Potable Reuse

As a water supplier within the Orange County Water District groundwater basin, IRWD will benefit from regional investments into Orange County Water District's groundwater recharge projects including past projects such as Water Factory 21 and more recently through the Groundwater Replenishment System (GWRS). IRWD is able to deduct a percentage of its water pumped from the basin to reflect the percentage that is supplied by the indirect potable reuse. Historical percentages have ranges from 0.78% to 2.84%, and total acre-feet of recharge has ranged between approximately 3,000 and 6,000 acre-feet. The deductable amount of indirect

recycled water is anticipated to increase to approximately 69,000 AF in 2015, after five years of full production from GWRS, which came online in 2008. OCWD has also designed the Phase 2 expansion for GWRS, which will further increase the deductable amount of indirect recycled water to approximately 98,000 AF within the timeframe of the 2020 UWMPs.

Pursuant to the Water Conservation Bill of 2009 requirements, urban water suppliers are to conduct a public meeting which includes consideration of economic impacts (CWC §10608.26). IRWD conducted a public hearing which included all of the required elements of the UWMP Act on June 13, 2011.

SECTION 4 SYSTEM SUPPLIES

Law

> 10631 (b) Identify and quantify, to the extent practicable, the existing and planned sources of water available to the supplier over the same five-year increments as described in subdivision (a) (10631(b)).
>
> 10631 (b) Is groundwater identified as an existing or planned source of water available to the supplier ... (10631(b))?

A. Water Sources (§ 10631(b))

IRWD is a member agency of the Municipal Water District of Orange County (MWDOC), wholesale importer and member agency of the Metropolitan Water District of Southern California (MWD). As such, MWDOC is entitled to receive water from the available sources of MWD and IRWD receives supplies through MWDOC. Groundwater is an additional source of water for IRWD and is anticipated to increase in the future. In addition, recycled water currently meets a large portion of the landscape irrigation demands within IRWD's service area. Table 16 below shows IRWD's diversity of current and projected water supply capacities.

Table 16

Water supplies — current and projected

Water Supply Sources		2010	2015	2020	2025	2030	2035
Water purchased from[1]:	**Wholesaler supplied volume (yes/no)**						
Potable Supplies							
Purchased MWD Treated	**Yes**	49,916	49,916	49,916	49,916	49,916	49,916
Groundwater		43,540	43,540	43,540	43,540	43,540	43,540
Baker Water Treatment Plant		0	6,858	6,858	6,858	6,858	6,858
Manning Water Treatment Plant		0	327	327	327	327	327
Future Groundwater Projects		0	6,474	10,538	10,538	10,538	10,538
Non-Potable Supplies							
Recycled Water		26,135	37,335	37,335	37,335	37,335	37,335
Purchased MWD Untreated		24,262	24,262	24,262	24,262	24,262	24,262
Native (Surface Water)		4,000	4,000	4,000	4,000	4,000	4,000
Non-potable Groundwater		3,898	3,898	3,898	3,898	3,898	3,898
Total		**151,751**	**176,610**	**180,674**	**180,674**	**180,674**	**180,674**

Units (circle one): acre-feet per year million gallons per year cubic feet per year

[1] Volumes shown here should be what was purchased in 2010 and what is anticipated to be purchased in the future. If these numbers differ from what is contracted, show the contracted quantities in Table 17.

[2] Volumes shown here should be consistent with Tables 17 and 18.

B. Imported Potable Water Supplies

Currently, approximately 27% of IRWD's potable water needs are met by water supplied by MWD through MWDOC. Potable imported water is delivered to IRWD at various service connections to the imported water delivery system of MWD. The majority of imported potable water is supplied from a single source; the MWD Diemer Filtration Plant (DFP) located north of Yorba Linda. Typically, the DFP receives a blend of Colorado River water from Lake Matthews through the MWD lower feeder and State Water Project (SWP) water through the Yorba Linda Feeder.

The two major transmission pipelines that deliver DFP water to the service area are the Allen-McColloch Pipeline (AMP) and East Orange County Feeder No. 2 (EOCF #2). IRWD owns 64.7 cfs capacity in the AMP, 41.4 cfs capacity in all reaches of the EOCF #2 down to Coastal Junction. In addition to DFP imported water, IRWD also receives potable water from the Weymouth Filtration Plant via the Orange County Feeder (OCF) 18 cfs acquired through its consolidation with Santa Ana Heights Mutual Water Company. IRWD also receives untreated supplies from MWD as described below under "Untreated Imported Water".

Table 17 below shows the wholesale supplies existing and planned for IRWD. These capacities represent IRWD's total connected delivery capacity through MWD and MWDOC. These amounts differ from the water demand projections in Table 12 which shows IRWD's expected imported demand estimates provided to its wholesale supplier MWDOC/MWD.

Table 17
Wholesale supplies — existing and planned sources of water

Wholesale sources[1,2]	Contracted Volume[3]	2015	2020	2025	2030	2035
MWD/MWDOC	74,178	74,178	74,178	74,178	74,178	74,178

Units (circle one): *acre-feet per year* *million gallons per year* *cubic feet per year*

[1]Water volumes presented here should be accounted for in Table 16.
[2]If the water supplier is a wholesaler, indicate all customers (excluding individual retail customers) to which water is sold. If the water supplier is a retailer, indicate each wholesale supplier, if more than one.
[3]Indicate the full amount of water

C. Non-Potable Water Supplies

IRWD's non-potable water system meets the majority of the landscape irrigation and agricultural water demands. The sources of the non-potable system consist of recycled water, untreated imported water, surface water and non-potable groundwater.

1. **Recycled Water.** IRWD has an extensive dual distribution system, which delivers recycled water from the Michelson Water Reclamation Plant (MWRP) and the Los Alisos Water Reclamation Plant (LAWRP). IRWD's recycled water system currently serves agricultural and non-agricultural irrigation demands and other non-potable uses. The quality of wastewater effluent used for landscape irrigation and agriculture

complies with Title 22, Division 4 of the California Administrative Code, Department of Health Services.

2. **Untreated Imported Water**. IRWD uses untreated imported water primarily to meet agricultural demands and to supplement landscape irrigation demands. The untreated water is imported from MWD. The imported untreated water pipeline initially known as the Santiago Aqueduct and now called the Baker Pipeline is connected to MWD's Santiago Lateral. IRWD's capacity in the Baker Pipeline includes 52.70 cfs in the first reach, 12.50 cfs in each of the second, third and fourth reaches and 7.51 cfs in the fifth reach of the Baker Pipeline. Water is subject to availability from MWD.

3. **Native Surface Water**. On average, about 4,000 acre-feet per year (AFY) of Santiago Creek local runoff is captured in the Irvine Lake. Under a license, IRWD and Serrano Water District have the right to 28,000 AFY from the Lake. Since the base flow from the catchment is very low, the annual yield variation from the reservoir may be extreme, from a few hundred acre-feet per year to overflow conditions. IRWD utilizes its Irvine Lake supplies for agricultural irrigation and Serrano Water District which owns 25% of the capacity in the Irvine Lake treats water for domestic use. During single or multiple dry years, IRWD's annual use of local runoff could be as little as 1,000 AFY.

D. Available Groundwater Sources (§ 10631(b))

Approximately 50 percent of IRWD's overall supply comes from local groundwater wells in the Orange County Groundwater Basin, and the Irvine and Lake Forest sub-basins. For many years, IRWD received almost all of our water from imported sources. To alleviate this dependency on costly imported water, IRWD began to develop a series of local wells in 1979. The Dyer Road Wellfield Project extracts low-cost, high-quality water from deep within the Orange County Groundwater Basin. IRWD now operates 25 groundwater wells.

The source of IRWD's groundwater supply is the Lower Santa Ana River Basin. IRWD is an operator of groundwater-producing facilities in the Orange County Groundwater Basin (Basin). Although the rights of the producers within the Basin vis a vis one another have not been adjudicated, they nevertheless exist and have not been abrogated by the Orange County Water District Act, Water Code App., Ch 40 ("Act"). The rights consist of municipal appropriators' rights and may include overlying and riparian rights.

The Basin is managed solely by the Orange County Water District (OCWD) under the Act and is described at pages 3-1 through 3-14 of the OCWD Master Plan Report, dated April 1999 ("MPR"). OCWD manages the Basin for the benefit of municipal, agricultural and private groundwater producers and is responsible for the protection of water rights to the Santa Ana River in Orange County as well as the management and replenishment of the Basin. See the next section for detailed description of the Orange County Groundwater Basin.

Law

Provide a copy of any groundwater management plan adopted by the urban water supplier, including plans adopted pursuant to Part 2.75 (commencing with Section 10750), or any other specific authorization for groundwater management (10631(b)(1)).

Provide a description of any groundwater basin or basins from which the urban water supplier pumps groundwater (10631(b)(2)).

For those basins for which a court or the board has adjudicated the rights to pump groundwater, (provide) a copy of the order or decree adopted by the court or the board (10631(b)(2)).

(Provide) a description of the amount of groundwater the urban water supplier has the legal right to pump under the order or decree (10631(b)(2)).

For basins that have not been adjudicated, provide information as to whether the department has identified the basin as overdrafted or has projected that the basin will become overdrafted if present management conditions continue, in the most current official department bulletin that characterizes the condition of the groundwater basin, and a detailed description of the efforts being undertaken by the urban water supplier to eliminate the long-term overdraft condition (10631(b)(2)).

Provide a detailed description and analysis of the location, amount and sufficiency of groundwater pumped by the urban water supplier for the past five years. The description and analysis shall be based on information that is reasonably available, including, but not limited to, historic use records (10631(b)(3)).

Provide a detailed description and analysis of the amount and location of groundwater that is projected to be pumped by the urban water supplier. The description and analysis shall be based on information that is reasonably available, including, but not limited to, historic use records (10631(b)(4)).

E. Groundwater Management Plan (§ 10631(b)(1))

OCWD has prepared a Groundwater Management Plan, last updated in 2009. The pumping provisions described in the Groundwater Management Plan are consistent with those stated herein. The Plan identifies OCWD's goals and basin management objectives in protecting and managing the Basin.

OCWD is the groundwater basin manager and the producers are the local retailers of the groundwater supplies. IRWD has not, nor have any other Basin groundwater producers, adopted OCWD's Groundwater Management Plan. IRWD is a producer of groundwater in the Basin and does not have any jurisdictional authority or authorization for groundwater management of the Basin. Therefore it is not appropriate for IRWD to adopt OCWD's Groundwater Management Plan.

F. Description of Groundwater Basin and Right to Pump (§ 10631(b)(2))

Orange County Groundwater Basin

IRWD produces groundwater primarily from the main Basin. According to the OCWD Groundwater Management Plan 2009 Update, the Basin covers approximately 350 square miles bordered by Chino Hills to the north, the Santa Ana Mountains the northeast and Pacific Ocean to the southwest. Measured recharge consists of all water artificially recharged at OCWD's Forebay percolation facilities and water injected at the Talbert Barrier and on the Orange County side of the Alamitos Barrier. Groundwater conditions in the Basin are influenced by the natural hydrologic conditions of rainfall, groundwater seepage and stream flow. Incidental recharge accounts for a significant amount of the basin's producible yield including precipitation and subsurface inflow. Current production from the Basin is approximately 366,000 AFY.

Irvine Subbasin

IRWD also produces non-potable supplies from the Irvine Subbasin. Degraded groundwater from the Irvine Subbasin provides non-potable water for agricultural and landscape use. The groundwater in this basin is high in total dissolved solids, color and nitrates. This basin has a perennial groundwater yield estimated at 13,000 AF. The Irvine Company ("TIC"), the major landowner in IRWD, has historically pumped agricultural water from the Irvine Subbasin. (As in the rest of the Basin of which this Subbasin is a part, the groundwater rights have not been adjudicated, and OCWD provides governance and management under the Act.) By agreement between TIC and IRWD, the TIC production capability, wells and other facilities and associated rights will be transferred from TIC to IRWD and IRWD will assume production from the Subbasin. A portion of the existing Subbasin produces water which is of potable quality. IRWD has constructed facilities to treat some of the water produced for potable use through the Irvine Desalter Project. The Irvine Desalter has the capacity to produce approximately 5,640 AFY of potable water supplies and 3,898 AFY of nonpotable water supplies.

Lake Forest Area Wells

IRWD also historically operated six wells within the Lake Forest area, however, this area does not overlie the OCWD Basin and therefore has much less groundwater production capability. In the past, several of these wells have produced poor quality supply which has supplemented the tertiary reclamation plant production in order to meet peak seasonal demand. IRWD is in the process of re-drilling Well No. 2 and expects to be producing water to the potable distribution system. IRWD is currently evaluating the future use of other wells in this area.

G. IRWD Right to Pump Groundwater

As mentioned, groundwater pumping rights within the OCWD are not adjudicated but groundwater production is managed by the OCWD through financial incentives. The framework for the financial incentives is based on OCWD establishing the Basin Production Percentage (BPP) each year. The BPP is the ratio of groundwater production to total water demands expressed as a percentage. Groundwater production above the BPP is charged a Basin Equity Assessment (BEA), which is set so that the cost of groundwater pumping above the BPP is similar to the cost of imported water. Each year, OCWD sets a target amount of pumping, the BPP, and assesses a BEA on all water pumped above that limit.

IRWD is an operator of groundwater-producing facilities in the Basin. Producers may install and operate production facilities under the Act; OCWD approval is not required. The majority of the potable groundwater supply to IRWD is produced from the Dyer Road Well Field (DRWF) located in the City of Santa Ana, which is connected to IRWD's system through a 54-inch pipeline in Dyer Road. The DRWF was developed starting in 1984 as a result of an agreement among IRWD, OCWD and the City of Santa Ana. The DRWF consists of 16 wells pumping from the clear water zone of the Basin and two wells (with colored-water treatment facilities) pumping from the deep, colored-water zone of the Basin (the colored-water portion of the DRWF is sometimes referred to as the Deep Aquifer Treatment System or "DATS".) Under the DRWF Agreement, an "equivalent" BPP has been established for the DRWF, currently 28,000 AFY consisting of 20,000 AFY of clear groundwater and an additional 8,000 AFY of "matching" clear groundwater provided a minimum of 8,000 AFY of colored groundwater is pumped from the deep aquifer zone. Although typically, IRWD production from the DRWF does not materially exceed the equivalent BPP, the equivalent BPP is not an extraction limitation; it results in imposition of financial assessments on the excess production.

IRWD also constructed the Irvine Desalter Project (IDP) treatment plants in the Irvine Subbasin which began operation in early 2007. The IDP was initiated by OCWD and IRWD to clean up the groundwater within the vicinity of the former Marine Corps Air Station, El Toro. IDP consists of three treatment plants, one potable and two non-potable. The potable treatment extracts and removes water high in TDS and salts conveying the treated water to IRWD's local potable water distribution system. This project produces approximately 5,500 AFY of potable water. The other non-potable treatment plants mentioned involve treatment processes to remove volatile organic chemicals (VOCs) to clean up the Basin and prevent a plume from reaching the main Basin. In addition, IRWD operates a few other wells which produce non-potable quality water which is conveyed to IRWD's separate non-potable distribution system.

On June 1, 2008, through annexation and merger, IRWD acquired the water system of the former Orange Park Acres Mutual Water company, including one well. The well is operated within the Orange County Groundwater Basin.

For 2011, OCWD adopted a BPP of 65%. This is anticipated by IRWD to be a temporary measure employed by OCWD to encourage lower pumping levels as OCWD implements other measures to reduce the current accumulated overdraft in the Basin. This reduction is not expected to affect any of IRWD's currently available groundwater supplies listed herein, which are subject to a contractually-set equivalent basin production percentage or are exempt from the basin production percentage.

H. Identification of Groundwater Basin as Overdrafted (§ 10631(b)(2))

The Department of Water Resources has not identified the Basin as overdrafted in its most current bulletin that characterizes the condition of the Basin, Bulletin 118 (2003). The efforts being under taken by OCWD to eliminate long-term overdraft in the Basin are described in the OCWD MPR, including in particular, Chapter 4, 5, 6, 14 and 15 of the MPR. OCWD's Act defines annual groundwater overdraft to be the quantity by which production exceeds the natural replenishment of the Basin. Accumulated overdraft is defined to be the quantity of water needed in the

groundwater basin forebay to prevent landward movement of seawater into the fresh groundwater body. However, seawater intrusion control facilities have been constructed by OCWD since the Act was written, and have been effective in preventing landward movement of seawater. These facilities allow greater utilization of the storage capacity of the Basin.

I. Groundwater Pumped Past Five Years (§ 10631(b)(3))

Table 18 below shows IRWD's groundwater pumped over the past five years. (See also "Description of Groundwater Basin" above.)

Table 18

Groundwater — volume pumped

Basin name(s)	Metered or Unmetered[1]	2006	2007	2008	2009	2010
Orange County Groundwater Basin	Metered	26,345	37,864	36,741	38,140	37,151
Irvine Subbasin	Metered	1,377	5,407	8,622	7,614	8,695
Los Alisos Area	Metered	78	6	16	61	3
Total groundwater pumped		27,800	43,277	45,379	45,814	45,850
Groundwater as a percent of total water supply		**18.7%**	**29.1%**	**30.5%**	**30.8%**	**30.8%**

Units (circle one): *acre-feet per year* *million gallons per year* *cubic feet per year*

[1]*Indicate whether volume is based on volumetric meter data or another method*

J. Groundwater Projected to be Pumped (§ 10631(b)(4))

The Basin is actually managed to allow utilization of up to 500,000 acre-feet of storage capacity of the basin during dry periods, acting as an underground reservoir and buffer against drought. OCWD operates the basin to keep the target dewatered basin storage at 200,000 acre-feet as an appropriate accumulated overdraft. Since the formation of OCWD in 1933, OCWD has made substantial investment in facilities, Basin management and water rights protection, resulting in the elimination and prevention of adverse long-term "mining" overdraft conditions. OCWD continues to develop new replenishment supplies, recharge capacity and basin protection measures to meet projected production from the Basin during normal rainfall and drought periods. (Source: 2008-2009 Engineer's Report on Groundwater Conditions, Water Supply and Basin Utilization in the Orange County Water District; OCWD MPR)

In addition to the MPR, OCWD has also prepared a Long Term Facilities Plan ("LTFP") which provides updated information and was received by the OCWD Board in July 2009. The LTFP Chapter 3 describes the efforts being undertaken by OCWD to eliminate long-term overdraft in the Basin. OCWD's MPR and LTFP examined future Basin conditions and capabilities, water supply and demand, and identified projects to meet increased replenishment needs of the basin. With the implementation of OCWD's preferred projects, the Basin yield in the year 2035 would be up to 500,000 AF. The amount that can be produced will be a function of which projects will be

implemented by OCWD and how much increased recharge capacity is created by those projects, total demands by all producers, and the resulting BPP that OCWD sets based on these factors.

In addition, sufficient replenishment supplies are projected by the OCWD MPR to be available to OCWD to meet the increasing demand on the Basin. These supplies include capture of increasing Santa Ana River flows, purchases of replenishment water from MWD, and development of new local supplies. OCWD is moving forward with a number of replenishment supply projects, including the Groundwater Replenishment System project ("GWRS"). The OCWD MPR indicates that the GWRS will produce approximately 98,000 AFY of new replenishment supply from recycled water.

As mentioned, IRWD plans to expand its groundwater facilities in the future. Plans are also underway to expand IRWD's main Orange County Groundwater Basin supply and IRWD anticipates the development of additional production facilities within both the main Basin and the Irvine Subbasin. IRWD is currently constructing the Wells 21 and 22 Project in the City of Tustin which consists of two existing wells with non-potable water quality piped to a reverse osmosis treatment plant and then to IRWD's potable distribution system. This project is expected to be operational by the end of 2012. This project is expected to yield 6,330 AFY of new potable supplies. Future water supplies planned by IRWD are also discussed under "Planned Water Supply Projects and Programs."

Table 19 below shows the amount of groundwater projected to be pumped during the horizon of the UWMP.

Table 19

Groundwater — volume projected to be pumped

Basin name(s)	2015	2020	2025	2030	2035
Orange County Groundwater Basin	49,646	46,005	49,038	49,414	43,870
Irvine Subbasin	11,692	11,155	11,692	11,692	10,444
Los Alisos Area	435	435	435	435	435
Total groundwater pumped	61,773	57,595	61,166	61,541	54,749
Percent of total water supply	35.0%	31.9%	33.9%	34.1%	30.3%

Units (circle one): *acre-feet per year* *million gallons per year* *cubic feet per year*

Include future planned expansion

Law

> 10631(d) Describe the opportunities for exchanges or transfers of water on a short-term or long-term basis (10631(d)).

K. Transfer Opportunities

In addition to developing the local groundwater and recycled water system, IRWD is diversifying its water supply portfolio by developing a water banking program in Kern County, California. This program will make it possible for IRWD to store excess water during "wet" hydrologic periods for use during "dry" periods in order to offset potential reductions in supply from its normal sources. The water is stored in an underground aquifer in Kern County. Over the past 15 years, water districts in Kern County have been on the forefront of the development of groundwater banking programs that benefit agencies on both sides of the storage agreements. In 2003 IRWD reviewed potential opportunities for water banking and subsequently purchased 611 acres of agricultural land, known as the Strand Ranch, in Kern County for this purpose.

IRWD will complete the development of its Strand Ranch Integrated Banking Project (Water Bank) by fall of 2011 and will then focus on expanding the project onto additional lands. The purpose of developing the Water Bank is to improve IRWD's water supply reliability by capturing low cost water available during wet hydrologic periods for use during dry periods. The Water Bank will be an important part of IRWD's ability to respond to drought conditions and potential water supply interruptions and will provide IRWD the ability to reduce the cost of water delivered under such conditions.

IRWD will be expanding its recharge and recovery facilities onto additional lands that were purchase by IRWD at the beginning of 2011. These additional lands will allow IRWD to increase its water banking recharge, storage and recovery capabilities by 50 percent which will further increase IRWD's water supply reliability.

IRWD entered into a 30-year water banking partnership with the Rosedale-Rio Bravo Water Storage District ("Rosedale") in Kern County. IRWD purchased high quality groundwater recharge lands that overly the regional Kern County groundwater basin. The properties have a major canal running through them that will allow moving water onto and off of the properties. IRWD has completed construction of 502 acres of groundwater recharge ponds and the facilities necessary to divert water from the canal and on to the property containing the ponds. The recharge ponds allow available surface water to be percolated into the groundwater basin for later use. Groundwater wells and pipelines that will be used to recover water from the Water Bank are currently being constructed and are expected to be completed by the end of 2011.

Pursuant to IRWD's contract with Rosedale, Rosedale will divert a portion of its entitlement to floodwater flows on the Kern River to IRWD-owned storage ponds for recovery in dry years. IRWD is entitled, at no cost, to 20 percent of all Kern River floodwaters recharged with IRWD recharge ponds.

Currently, IRWD can store up to 50,000 acre-feet in the aquifer and may recover up to approximately 17,500 acre-feet in any single year. IRWD has priority rights to use the recharge

ponds when Rosedale is not recharging Kern River floodwaters. All other uses of the recharge ponds by Rosedale are on a second priority basis to IRWD's use. The water that Rosedale stores on its own behalf does not count against the 50,000 acre-feet of storage dedicated to IRWD.

IRWD has contracted with Rosedale to manage the Water Bank on its behalf. IRWD has also entered into a Coordinated Operating and Water Exchange Agreement with Metropolitan Water District of Southern California (MWD) which will allow IRWD to have State Water Project (SWP) water recovered from the Water Bank delivered to IRWD's service area. IRWD is in the process of developing an agreement with MWD for wheeling non-SWP water into IRWD's service area.

IRWD has also secured access to State Water Project water that will be stored in the Water Bank. IRWD acquired approximately 883 acres (the "Jackson Ranch") located within the Dudley Ridge Water District and its associated rights to use approximately 1,738 acre-feet of Table A SWP water allocated to it. Additionally, the land acquisition included certain participation rights in the Kern Water Bank to store approximately 7,600 acre-feet of water.

IRWD also entered into a 28 year Exchange Program with Buena Vista Water Storage District (BVWSD) that allows BVWSD to store a portion of its high-flow Kern River water at the Water Bank in exchange for allocating half the water stored to IRWD. BVWSD holds both State Water Project Table A water rights and pre-1914 rights to Kern River water. The pre-1914 water rights give BVWSD an average annual entitlement of 158,000 acre-feet of Kern River water. Pursuant to the Exchange Program, BVWSD is entitled to deliver up to 17,500 acre-feet of water to the Water Bank in any given year with a maximum cumulative capacity of 40,000 acre-feet. IRWD is entitled to keep 50% of any water banked by BVWSD at the Water Bank. IRWD is required to return a maximum of 6,667 acre feet per year of water stored with it by BVWSD. In 2010, IRWD stored 9,500 AF of water in the Water Bank under the Buena Vista Program. In 2011, IRWD expects to store another 17,500 AF from the Buena Vista Program. IRWD also expects to store 700 AF of Jackson Ranch water in the Kern Water Bank

IRWD is currently pursuing contractual rights to other surface waters for diversion into the Water Bank for later use by IRWD. These other sources include State Water Project and Central Valley Project water. Pilot program agreements are being developed with other State Water Project entitlement holders and IRWD expects to deliver additional water into storage at the Water Bank in 2011/12 and beyond as a result of these new programs.

Table 20
Transfer and exchange opportunities

Transfer agency	Transfer or exchange	Short term or long term	Proposed Volume
Buena Vista Water Storage District	exchange	long term	8,750
Dudley Ridge Water District	transfer	long term	1,738
Total			10,488

Units (circle one): *acre-feet per year* *million gallons per year* *cubic feet per year*

Law

> 10631(i) Describe the opportunities for development of desalinated water, including, but not limited to, ocean water, brackish water, and groundwater, as a long-term supply (10631(i)).

L. Desalinated Water Opportunities

A number of sites in Southern California are currently being considered for ocean water desalination facilities. Since IRWD could someday receive potable water produced by one or more of these facilities, staff has been tracking the development of these projects.

Most recently, an ocean water desalination facility is being developed at a site in Huntington Beach. The proposed project would be constructed by Poseidon Resources, LLC a private company. The proposed project consists of the construction and operation of a 50 million gallon per day ocean water desalination facility within the City of Huntington Beach. The proposed project would distribute the water to coastal and southern Orange County to provide approximately 8% of Orange County's water supply needs. In addition to final water purchase agreements with participating agencies, the project still needs approval from the California Coastal Commission before Poseidon can commence construction of the desolation facility in Huntington Beach (MWDOC, Regional Urban Water Management Plan 2010).

Any water delivered to IRWD through a future ocean desalination facility would offset any potable water imported through MWD. MWD addresses seawater desalination in its 2010 RUWMP and it is included in the IRP Update target under local water production.

Law

> 10633 Provide, to the extent available, information on recycled water and its potential for use as a water source in the service area of the urban water supplier. The preparation of the plan shall be coordinated with local water, wastewater, groundwater, and planning agencies that operate within the supplier's service area (10633)

M. Recycled Water

In 1963, IRWD made the decision to provide sewage collection and treatment and production of recycled water. By 1967, Michelson Water Reclamation Plant began wastewater collection, tertiary treatment and delivery of recycled water to agricultural users. IRWD began serving recycled water to agricultural users and expanded to include landscape irrigation (parks, golf courses, school grounds and play fields, community associations, open space area, green belts), and eventually for front and backyard irrigation for large estate-sized residential lots, toilet flushing for large commercial buildings, carpet dying, construction dust control and cooling tower applications.

IRWD currently produces approximately 18,000 AFY of recycled water from its Michelson Water Reclamation Plant (MWRP) and another 2,000 AFY from its Los Alisos Water Reclamation Plant (LAWRP). Currently, recycled water meets over 23% of IRWD's total water resource demands. Recycled water is used primarily for landscape and agricultural irrigation. Landscape irrigation uses include parks, school grounds, golf courses, freeway landscaping and irrigation of common areas managed by many homeowner associations. In addition, recycled water is used for front and backyard irrigation in eligible residential lots, industrial processes, toilet flushing in some office buildings, and in cooling towers. The MWRP is currently undergoing an expansion of the capacity from 18.0 mgd to 28 mgd. The expansion should be completed in 2012 and will produce sufficient recycled water to meet IRWD's non-potable demands at total build-out of the service area.

Although, IRWD has always planned the continued use of recycled water and expansion of the distribution system to meet future demands, MWD assisted IRWD early on in 1986 through its Local Projects Program in funding the recycled water expansion of the MWRP then from 5,000 AFY to 10,000 AFY. More recently in 2005, MWD and IRWD entered into a Local Resources Project agreement for assistance on capital projects to produce and distribute an additional 8,500 AFY of recycled water through MWRP and LAWRP. The MWRP is currently undergoing an expansion of the capacity from 18.0 mgd to 28 mgd. The expansion should be completed in 2012 and will produce sufficient recycled water to meet IRWD's non-potable demands at total build-out of the service area.

Law

10633(a) Describe the wastewater collection and treatment systems in the supplier's service area, including a quantification of the amount of wastewater collected and treated and the methods of wastewater disposal (10633(a)).

10633(b) Describe the quantity of treated wastewater that meets recycled water standards, is being discharged, and is otherwise available for use in a recycled water project.

10633(c) Describe the recycled water currently being used in the supplier's service area, including, but not limited to, the type, place and quantity of use.

10633(d) Describe and quantify the potential uses of recycled water, including, but not limited to, agricultural irrigation, landscape irrigation, wildlife habitat enhancement, wetlands, industrial reuse, groundwater recharge, indirect potable reuse, and other appropriate uses, and a determination with regard to the technical and economic feasibility of serving those uses.

10633(e) Describe the projected use of recycled water within the supplier's service area at the end of 5, 10, 15 and 20 years, and a description of the actual use of recycled water in comparison to uses previously projected pursuant to this subdivision 10633(e).

10633(f) Describe the action, including financial incentives, which may be taken to encourage the use of recycled water, and the projected results of these actions in terms of acre-feet of recycled water used per year.

10633(g) Provide a plan for optimizing the use of recycled water in the supplier's service area, including actions to facilitate the installation of dual distribution systems, to promote recirculating uses, to facilitate the increased use of treated wastewater that meets recycled water standards, and to overcome any obstacles to achieving that increased use.

N. Wastewater Quantity, Quality and Current Uses

The majority of wastewater collected within IRWD service area is treated at the MWRP using advanced or tertiary treatment. MWRP uses a reclamation method that simulates the process used by nature to biodegrade wastes. The end result is high quality water that earned IRWD the first unrestricted use permit issued in the state allowing recycled water to be used for virtually everything but drinking. The permitted effluent capacity of the MWRP is currently 18.0 mgd and average flow is approximately 18 mgd. The efficiency of MWRP recycled water production has been estimated to be approximately 90% of the wastewater inflow to the plant. The MWRP is currently undergoing an expansion of the capacity from 18.0 mgd to 28 mgd. The expansion should be completed in 2012 and will produce sufficient recycled water to meet IRWD's non-potable demands at total build-out of the service area.

After the clarification process, most of the sludge settles to the bottom of the primary clarification tanks and is pumped through underground pipes to the Orange County Sanitation District (OCSD) where it undergoes further treatment and ultimate ocean discharge. IRWD joined the OCSD in order to secure an alternate method of sewage treatment and disposal. In 2012, IRWD plans to

begin construction of a biosolids digester facility at the location of the MWRP. This will enable IRWD to digest and dehydrate sludge which will then be converted to pelletized fertilizer.

IRWD also owns and operates the Los Alisos Water Reclamation Plant (LAWRP). This is a separate wastewater treatment system from MWRP with 5.5 mgd capacity. The collection system consists of 105 miles of pipe and one lift station which delivers wastewater to the LAWRP. Secondary effluent from the wastewater plant is pumped to either the tertiary treatment plant where it is treated for use in IRWD's Lake Forest area's non-potable distribution system or, if demands are low, to the South Orange County Wastewater Authority (SOCWA) pumping station which directs its flows to the SOCWA effluent transmission mains and subsequent ocean outfall.

The following Table 21 summarizes the current and projected amounts of wastewater collected and treated by each of IRWD's facilities and the type of treatment processes used. Treated effluent produced at both plants meets the water quality standards set forth in the California Administrative Code (CAC), Title 22, Division 4 (Title 22) for use as recycled water. Table 21 also identifies the quantities of wastewater currently being treated to recycled water standards (Title 22).

Table 21

Recycled water — wastewater collection and treatment

Type of Wastewater	2005	2010	2015	2020	2025	2030	2035
Wastewater collected & treated in service area	19.2	23.4	32.2	34.6	36.8	37.6	38.3
Volume that meets recycled water standard	13.7	16.2	23.9	27.1	30.3	31.0	31.6

Units (circle one): acre-feet per year [*million gallons per day*] *cubic feet per year*

Table 22 identifies the estimated quantities of wastewater water that is currently being discharged. Wastewater is discharged primarily due to the fact that IRWD only produces recycled water to meet recycled water demands. During winter months, irrigation demands are lower and therefore less recycled water is produced and some wastewater is discharged. Also as mentioned, if excess recycled water exists during winter months, IRWD may wholesale some excess recycled water from MWRP to the Orange County Water District (OCWD) Green Acres Project (GAP) and some excess recycled water from LAWRP to the Santa Margarita Water District on an as needed basis during the months from October through March.

Table 22

Recycled water — non-recycled wastewater disposal

Method of disposal	Treatment Level	2010	2015	2020	2025	2030	2035
OCSD	None	1.7	4.5	3.4	2.1	2.1	2.1
SOCWA Outfall	Secondary/Tertiary	4.5	3.8	4.1	4.4	4.6	4.6
	Total	6.2	8.3	7.5	6.5	6.7	6.7

Units (circle one): acre-feet per year [*million gallons per day*] *cubic feet per year*

Some areas within IRWD's service area are not served by MWRP or LAWRP wastewater collection and treatment systems. A small percentage of wastewater collected within IRWD's service area does not go to MWRP or LAWRP but is currently collected by OCSD, Santa Margarita Water District or El Toro Water District. This wastewater that is collected by other agencies is treated to primary standards and is not treated to recycled water (tertiary) level of treatment

O. Potential and Projected Use, Optimization Plan with Incentives

IRWD's existing non-potable water system is supplied by four primary sources: recycled water produced at the MWRP, non-potable groundwater, untreated water purchased from MWD, and local runoff into the Irvine Lake. The non-potable water system consists of two subsystems: 1) A recycled system that delivers recycled water, supplemental untreated water, and limited non-potable groundwater to landscape, agricultural irrigation customers, high rise office buildings (for non-potable water usage toilets) and various industrial users, and 2) An untreated water system that delivers imported untreated water and local runoff via the Irvine Lake to agricultural customers and to supplement the recycled water system. Irvine Lake provides storage and captures local runoff for the untreated water system and Sand Canyon Reservoir, Rattlesnake Reservoir and San Joaquin Reservoir provide storage for the recycled water system.

There is a separate non-potable distribution system in the IRWD's Lake Forest area (formerly LAWD) with a blended water supply system to meet landscape and irrigation demands. The supply is a blend of tertiary treated wastewater and non-potable well water. When available, three wells are used to supplement the tertiary reclamation plant production in order to meet seasonal peaks in demand.

IRWD's recycled water program is intended to conserve and optimize high-quality drinking water supplies for critical public purposes by reducing the use of these supplies for non-potable uses. IRWD's program has enhanced local water supply reliability for both IRWD and the region because it directly offsets the need for firm treated, imported water for municipal irrigation and other non-potable uses.

As outlined in IRWD's WRMP, prudent water supply and financial planning dictate that development of new supplies be phased over time consistent with the growth in demand. The District has total connected capacity of over 241 cfs (treated and untreated) from MWD's regional delivery system. These supplies could meet both existing and future demands. However, IRWD strongly believes that supply diversity is the key to providing reliability. Consequently, IRWD has expended considerable time, effort, and money developing a diverse mix of supplies, including one of the most extensive recycled water systems in the United States.

In addition to the need to expand capacity to produce recycled water, the dual distribution system must also be expanded to deliver recycled water to new users. SAMP's being completed for development in the northern areas of the District including the former Marine Corps Air Station, El Toro recommend construction of dual distribution systems for recycled water service.

Non-potable system demand in IRWD's entire project service area is expected to increase by more than 16,000 AFY by the year 2035. The MWRP and LAWRP upgrades and MWRP expansion will help to supply these new demands, which cannot be served through existing plant capacity.

As mentioned, IRWD operates an extensive dedicated recycled water production and distribution/delivery system and has successfully served recycled water for 36 years throughout IRWD. Recycled water production is from the existing MWRP and LAWRP plants which provide both wastewater treatment and water recycling. However, because IRWD owns wastewater treatment and disposal capacity at the Orange County Sanitation District facilities, the District essentially uses MWRP solely for the production of recycled water. The District also operates over 450 miles of existing dual distribution pipelines and this system is continuing to expand. In addition, there is a connection between the LAWRP and the IRWD Zone B recycled water system which enhances system reliability and redundancy.

Unlike some projects that serve a limited number of customers, IRWD's non-potable water distribution system reaches most of its service area. While some portions of the distribution system have been retrofitted after initial development, the much more cost effective practice and the one commonly employed at IRWD is to install recycled water lines along with potable water and sewer as new housing or commercial developments are built. IRWD's dual distribution system is constructed to serve planned communities within the service area and IRWD mandates its use for landscape irrigation and other non-potable uses. The IRWD service area is still growing and based on the current "meter to demand" ratio in the District, IRWD anticipates over 1,000 additional recycled water meters will be installed in new communities.

The specific use of recycled water and installation of dual water systems is required through IRWD's Rules and Regulations Section 4.12 "Use of Recycled Water " which cites mandatory recycled water use provisions within the District. As evidenced by IRWD's 3,400 dedicated recycled water connections (the most in the United States), this policy has been successfully implemented and enforced by IRWD over the years and serves as the District's "mandatory use ordinance."

In addition, master planned communities within the IRWD service area are required to plan and design for recycled water use early in the process as defined by Sub-Area Master Plans (SAMP) prepared for specific development areas. Each development is considered early in the planning process for its accessibility to recycled water and land developers are aware of the District's requirement to utilize recycled water for all common area irrigation and other approved non-potable uses in lieu of potable water. IRWD approves all development plans for master irrigation, which must be served with recycled water. Developers must enter into subdivision agreements with IRWD, which provide for construction of in-tract recycled water facilities for the ultimate use by new IRWD customers.

Additionally, IRWD actively pursues potential existing opportunities for recycled water conversions wherever non-potable water can be used in-lieu of potable water. The District continues to assess all potential opportunities for cost-effective recycled water conversions. These new recycled water customers are also committed to recycled water use by contractual agreement with IRWD.

Due to its extensive 36-year history of providing recycled water to a growing service area, IRWD has considerable experience in projecting increases in demand with phased development and coordinating system expansion to meet these demands. Since IRWD's formation in 1961, land use has steadily changed with agricultural areas being converted to residential, commercial, industrial and other urbanized uses. IRWD utilizes ultimate land use plans, phasing projections of future developments obtained from General Plan documents and developer plans where available, to develop water demand projections.

Proposed project demands will emanate from major developments in north Irvine, including Planning areas 5B, 6, and 9 in the Northern Sphere Area, Spectrum 8, and the redevelopment of the former Marine Corps Air Station, El Toro (Orange County Great Park). IRWD has prepared and approved "Water Supply Assessments and Verifications" of sufficient water supplies as required under State legislation for these developments, as well as for other planned developments which include the use of recycled water. These areas represent a majority of future development within the District and are proceeding through the City's planning process.

As mentioned, the MWRP is currently undergoing an expansion of the capacity from 18.0 mgd to 28 mgd. The expansion should be completed in 2012 and will produce sufficient recycled water to meet IRWD's non-potable demands at total build-out of the service area.

Table 23 below shows the District's expected potential future uses of recycled water.

Table 23

Recycled water — potential future use

User type	Description	Feasibility[1]	2015	2020	2025	2030	2035
Agricultural irrigation		Y	1,500	1,500	1,500	1,500	1,500
Landscape irrigation[2]		Y	23,115	26,349	29,261	30,053	30,842
Construction		Y	50	100	200	200	200
Commercial/Industrial		Y	250	300	350	400	400
Sales to Others		Y	1,500	1,500	1,500	1,500	1,500
	Total	0	26,415	29,749	32,811	33,653	34,442

Units (circle one): acre-feet per year million gallons per year cubic feet per year

[1]Technical and economic feasibility.

[2]Includes parks, schools, cemeteries, churches, residential, or other public facilities)

[3]Includes commercial building use such as landscaping, toilets, HVAC, etc) and commercial uses (car washes, laundries, nurseries, etc)

In addition to direct re-use of recycled water by IRWD, as mentioned, the OCWD owns and operates the GWRS which utilizes highly treated wastewater for groundwater recharge and seawater barriers. IRWD benefits from regional investments made by OCWD the indirect potable water reuse for important groundwater recharge projects. OCWD expects to ultimately produce 132,000 AFY if future project phases are completed. (MWDOC RUWMP).

Table 24 shows the comparison of IRWD's projected recycled water use in 2005 for 2010 and the actual 2010 recycled water use.

Table 24
Recycled water — 2005 UWMP use projection compared to 2010 actual

Use type	2010 actual use	2005 Projection for 2010[1]
Agricultural irrigation	1,395	1,800
Landscape irrigation[2]	18,516	20,088
Construction	195	65
Commercial/Industrial	1,724	4,000
Sales to Others	5	250
Total	21,835	26,203

Units (circle one): acre-feet per year million gallons per year cubic feet per year
[1]From the 2005 UWMP. There has been some modification of use types. Data from the 2005 UWMP can be left in the existing categories or modified to the new categories, at the discretion of the water supplier.
[2]Includes parks, schools, cemeteries, churches, residential, or other public facilities)
[3]Includes commercial building use such as landscaping, toilets, HVAC, etc) and commercial uses (car washes, laundries, nurseries, etc)

P. Encouraging Recycled Water Use

It is the desire of IRWD to effect conservation of water resources whenever possible, and be directed toward collecting, treating and reclaiming sewage and wastewater and beneficially reusing the resulting recycled water. It is IRWD's intent to provide customers with recycled water in lieu of potable water for approved uses such as landscape irrigation, agricultural irrigation, construction water, industrial process water, cooling tower makeup water, and water for flushing toilets and urinals in larger commercial buildings. IRWD has found there is customer interest in using recycled water for landscape and industrial purposes as a highly reliable source of supply. IRWD offers customers a discount from potable rates for using recycled water service. IRWD may also provide some financial incentives when feasible for customers to retrofit from potable water to recycled water use. Table 25 shows Methods to Encourage Recycled Water Use for IRWD. However, because IRWD already has a "Mandatory Use" requirement for all new construction landscape, financial incentives may apply to retrofitting potable or other imported water connections with recycled water.

Table 25
Methods to encourage recycled water use

Actions	Projected Results					
	2010	2015	2020	2025	2030	2035
Financial incentives	1,800	400	300	200	100	100
Total	1,800	400	300	200	100	100

Units (circle one): acre-feet per year million gallons per year cubic feet per year

Q. Recycled Water Optimization Plan

Since 1967, IRWD has been providing recycled water for irrigation within its service area. IRWD's reclamation program has evolved from supplying agricultural needs to meeting the majority of landscape irrigation demands within the service area via an extensive dual distribution system. In addition to agricultural crops, other areas such as government facilities, schools, homeowner associations, golf courses, parks, green belts and street medians are currently supplied with recycled water.

The expansion of IRWD's recycled system is ongoing. In addition to new development areas over the last ten years, 12 older areas within IRWD have been converted from domestic water to recycled water use primarily for irrigation. IRWD has also expanded the acceptable use for recycled water. IRWD requires that all new high-rise office buildings within its service area, for example, are dual plumbed to use recycled water for flushing toilets and urinals. One of the newer conversion areas is in a commercial/industrial sector and includes conversions of industrial uses, such as carpet dyeing, along with irrigation. Conversion of cooling towers is also contemplated and being analyzed. More recently, IRWD has provided service to several tracts of estate-sized single-family lots for "full yard" irrigation. Most of the lots are over 1/2 acre, with an average of 1/4-acre irrigable landscape.

IRWD's recycled system demands have increased from approximately 10,300 AFY to 18,800 AFY over the last ten years and demand is projected to grow by 30% by the 2035. This is due to "infill" demands in areas currently served and expansion of the system into new areas. To meet increased demand, IRWD is reviewing an expansion of MWRP treatment capacity. The treatment capacity of MWRP can be expanded depending on sufficient influent wastewater flow into the plant and assurance that the expansion is economically, technologically and environmentally feasible. Future expansions to the recycled system are currently being evaluated.

IRWD expects the Lake Forest service area to have some growth within its recycled system serving additional landscape irrigation demand. It is anticipated that interconnecting the two separate existing recycled water distribution systems will enhance the reliability and availability of recycled service and potential expansion to areas that are not currently served with recycled water. IRWD has studied several retrofit opportunities to recycled water in the Lake Forest area and will complete these as feasible to do so.

In 2003, IRWD completed a Wastewater Treatment Master Plan which included plans to add the Harvard Avenue Trunk Sewer (HATS) wastewater flows to MWRP which at that time flowed to OCSD. The HATS project was completed in 2006. These flows are expected to be 7.9 mgd at build out. This diversion requires an expansion of the MWRP treatment capacity which is underway.

Law

> 10631(h) Describe all water supply projects and water supply programs that may be undertaken by the urban water supplier to meet the total projected water use as established pursuant to subdivision (a) of Section 10635. The urban water supplier shall include a detailed description of expected future projects and programs, other than the demand management programs identified pursuant to paragraph (1) of subdivision (f), that the urban water supplier may implement to increase the amount of the water supply available to the urban water supplier in average, single-dry, and multiple-dry water years. The description shall identify specific projects and include a description of the increase in water supply that is expected to be available from each project. The description shall include an estimate with regard to the implementation timeline for each project or program.

R. Planned Water Supply Projects and Programs (§ 10631(h))

In general, IRWD's supplies that are planned or under development may necessitate the preparation and completion of environmental documents, regulatory approvals and/or contracts prior to full construction and implementation. As outlined in the WRMP, prudent water supply and financial planning dictates that development of supplies be phased over time consistent with the growth in demand.

1. Potable Water Supply

Groundwater

IRWD is also pursuing the installation of production facilities in the west Irvine, Anaheim, Tustin Legacy and Tustin Ranch portions of the Basin. These groundwater supplies are considered to be under development; however, several wells have been drilled but have not been used as production wells to date.

Imported Water

IRWD is a partner in the construction of the Baker Water Treatment Plant, a 25 mgd regional project that will be built at the existing IRWD Baker Filtration Plant site in the City of Lake Forest. The Plant will treat untreated water from the Santiago Lateral and Irvine Lake through the Baker Pipeline. The project is intended to provide increased water supply reliability to south Orange County by increasing local treatment capability of imported untreated water from MWD. Project partners include IRWD, El Toro Water District, Moulton Niguel Water District, Santa Margarita Water District and Trabuco Canyon Water District (2010 Regional Urban Water Management Plan, MWDOC). The project is scheduled to begin construction in 2011 and is expected to come online in 2013. The project will treat up to 28,000 AF per year and IRWD will receive approximately 28% of the supply or approximately 6,858 AFY.

2. Non-Potable Supply

Expansion to Recycled Water Treatment Capacity:

IRWD is currently constructing the Michelson Water Reclamation Plant Phase 2 and 3 Capacity Expansion Project. With this expansion, IRWD will increase its treatment capacity of the existing MWRP to produce sufficient reclaimed water to meet the projected demand in the year 2035. Additional reclamation capacity will augment local nonpotable supplies and improve reliability.

Table 26 below shows IRWD's projected future potable water supply projects. Table 26 includes the estimated normal-year supply, single dry-year supply and multiple dry-year supplies from IRWD's planned water supply projects.

Table 26
Future water supply projects

Project name[1]	Projected start date	Projected completion date	Potential project constraints[2]	Normal-year supply[3]	Single-dry year supply[3]	Multiple-dry year first year supply[3]	Multiple-dry year second year supply[3]	Multiple-dry year third year supply[3]
Baker Water Treatment Plant	2010	2013		6,858	6,858	6,858	6,858	6,858
Well 106	2011	2012		1,248	1,248	1,248	1,248	1,248
Joint Anaheim Well Field	n/a	n/a		9,798	9,798	9,798	9,798	9,798
Wells 109, 112, 114	n/a	n/a		3,745	3,745	3,745	3,745	3,745
Well 51	2013	2015		2,613	2,613	2,613	2,613	2,613
Well 53	n/a	n/a		2,903	2,903	2,903	2,903	2,903
Tustin Legacy	n/a	n/a		3,919	3,919	3,919	3,919	3,919
Well TL-1a (52)	2012	2013		2,613	2,613	2,613	2,613	2,613
Expanded OPA Well Pumping	2014	2016		4,064	4,064	4,064	4,064	4,064
		Total		37,761	37,761	37,761	37,761	37,761

Units (circle one): *acre-feet per year* *million gallons per year* *cubic feet per year*

[1]Water volumes presented here should be accounted for in Table 16.

[2]Indicate whether project is likely to happen and what constraints, if any, exist for project implementation.

[3]Provide estimated supply benefits, if available.

SECTION 5 WATER SUPPLY RELIABILITY AND WATER SHORTAGE CONTINGENCY PLANNING

Law

> 10620(f) An urban water supplier shall describe in the plan water management tools and options used by that entity that will maximize resources and minimize the need to import water from other regions.
>
> 10631(c)(1) Describe the reliability of the water supply and vulnerability to seasonal or climatic shortage, to the extent practicable, and provide data for each of the following:
>
> (A) An average water year.
> (B) A single dry water year.
> (C) Multiple dry water years.
>
> 10631(c)(2) For any water source that may not be available at a consistent level of use, given specific legal, environmental, water quality or climatic factors, describe plans to supplement or replace that source with alternative sources or water demand management measures, to the extent practicable.

A. Tools to Maximize Resources (§ 10620(f))

As mentioned, as a sub-member agency of MWD, IRWD is aware of imported water challenges that face the future and it is within this context that IRWD's future water resource development plan has been fashioned. IRWD has diversified water supplies consisting of local groundwater (potable and nonpotable), two water reclamation plants with dual distribution system, and imported supplies through MWD. IRWD has also been active in reducing demands through conservation measures while making significant investment in pursuing other sources of supply to meet growing demands, including groundwater production, recycled water expansion, water banking, conservation and inter-agency agreements. The District's primary supply objective is to secure a high quality, reliable and economical resource mix necessary to meet present and future demands. IRWD has taken an integrated approach to enhancing diversity of supply sources in order to achieve reliable and economical water system operations.

IRWD's water resources program relies on further maximizing local resources to meet demands through increased recycled water use, increased groundwater development, groundwater treatment, conservation and groundwater banking opportunities. By the year 2035, IRWD's potable system demands are projected to reach approximately 96,500 AFY, an increase of about 30,500 AFY from current levels. Development of additional groundwater and recycled water are projected to reduce dependency on imported water supply in the future.

IRWD's planning documents including implementation of the WRMP and UWMP describes plans to diversify water supplies including assumptions to maximize groundwater development, full expansion of IRWD's MWRP treatment capacity (which IRWD is currently undergoing); and the development of water banking facilities in the Kern County area to provide a supplemental water supply for future dry periods of when supplies may be restricted.

Law

10632. The plan shall provide an urban water shortage contingency analysis which includes each of the following elements which are within the authority of the urban water supplier:

10632 (a) Stages of action to be undertaken by the urban water supplier in response to water supply shortages, including up to a 50 percent reduction in water supply, and an outline of specific water supply conditions which are applicable to each stage.

10632 (c) Actions to be undertaken by the urban water supplier to prepare for, and implement during, a catastrophic interruption of water supplies including, but not limited to, a regional power outage, an earthquake, or other disaster.

10632 (d) Additional, mandatory prohibitions against specific water use practices during water shortages, including, but not limited to, prohibiting the use of potable water for street cleaning.

10632 (e) Consumption reduction methods in the most restrictive stages. Each urban water supplier may use any type of consumption reduction methods in its water shortage contingency analysis that would reduce water use, are appropriate for its area, and have the ability to achieve a water use reduction consistent with up to a 50 percent reduction in water supply.

10632 (f) Penalties or charges for excessive use, where applicable.

10632 (g) An analysis of the impacts of each of the actions and conditions described in subdivisions (a) to (f), inclusive, on the revenues and expenditures of the urban water suppliers, and proposed measures to overcome those impacts, such as the development of reserves and rate adjustments.

10632 (h) A draft water shortage contingency resolution or ordinance.

10634. The plan shall include information, to the extent practicable, relating to the quality of existing sources of water available to the supplier over the same five-year increments as described in subdivision (a) of Section 10631, and the manner in which water quality affects water management strategies and supply reliability.

B. Stages of Action

IRWD's response to inadequate water supply varies depending on the magnitude of the shortfall. In the event of a water shortage situation, IRWD would rely on its Water Shortage Contingency Plan (WSCP), which was most recently updated and adopted in February 2009, and is included in Appendix E. The WSCP provides guidelines for specific responses to specific levels of drought ranging from Stage 1 to Stage 4, as shown in Table 35. During varying water supply conditions, IRWD has performed analysis relating to reduced supply and efforts to reduce demands accordingly including voluntary and mandatory demand reduction measures. This WSCP provides IRWD with a series of measures that may be implemented during a water shortage or drought conditions. These stages of action have been included in IRWD's Rules and Regulations (Section 15) which states, "the measures may be applied singly or in combination and may vary according to the severity and duration of the shortage. Other measures may be applied in lieu of

or in addition to those described in the WSCP." IRWD's Board declares the level or state of shortage based on water supply conditions.

Table 35
Water shortage contingency — rationing stages to address water supply shortages

Stage No.	Water Supply Conditions	% Shortage
1	Shortage warning and low-level shortage	Up to 10%
2	Significant shortage	10-25%
3	Severe shortage	25-40%
4	Crisis shortage condition	>40%

[1]*One of the stages of action must be designed to address a 50 percent reduction in water supply.*

C. Catastrophic Supply Interruption Plan (§ 10632(c))

IRWD's response to a catastrophic interruption of water supply would depend on the cause, severity and anticipated duration of the emergency. Any potential shortage resulting in a reduction of available supplies can be addressed through a combination of alternative supplies and storage. Since IRWD's major water sources include both imported water and groundwater, it is unlikely that both sources would be out simultaneously.

Since IRWD does not operate a regulating reservoir to meet seasonal variations in water demand, IRWD's policy is to supply the maximum day potable demands, thus meeting the worse case demand scenario. Daily fluctuations are met by local storage within the distribution system.

Interruption in Imported Supplies
Interruption in source water deliveries to IRWD could occur as a result of a planned outage or emergency source outage. The MWD member agencies reference MWD's Administrative Code for member agency outage planning criteria. Each member agency including MWDOC, IRWD's MWD-member agency, should have a seven-day supply of water in case of an interruption of MWD deliveries.

IRWD completed a system reliability study in 2010. The results of the study on system reliability as a result of impact of outages at vulnerable supplies facilities were evaluated. The Diemer Filtration Plant and DRWF are the two primary locations where an outage would have a significant impact on IRWD"s ability to meet short term demands. One means of mitigating the impact of an emergency outage at either of these would be to achieve extraordinary levels of conservation and curtailment of water use. This emergency conservation would be temporary and would be targeted primarily at outdoor water usage. The estimated emergency conservation this is achieved using estimates of outdoor water use cutback is approximately 14-20% of total water demand. A complete outage of imported water from the Diemer Filtration Plant would result in the greatest supply deficiency in the IRWD system. Also as noted, IRWD owns capacity in the AMP and IRWD owns capacity in EOCF#2 and other transmission mains that could be used to serve demands throughout the Districts. The availability of these additional sources enhances the

reliability of IRWD's distribution system through diversification beyond its current dependence on just the AMP.

Service Area Interties

IRWD has existing interties between its Lake Forest service area and its main service area, which provide a positive service delivery benefit by increasing the sources of supply of water and the opportunities to share and expand the use of recycled water. The interties provide expanded opportunities to increase regional facility operational efficiency and reliability by opening existing "emergency" interconnections on a regular basis to increase access to water supply and allocating reservoir storage to support all systems thereby allowing flexibility of water operations and reducing the need for redundant storage capacity.

On an inter-county basis, IRWD has emergency water interconnections with several neighboring water suppliers providing a means to exchange and transfer water between agencies. Currently, IRWD has 10 interconnections: four with City of Newport Beach; one with East Orange County Water District; one with Santa Margarita Water District; one with Trabuco Canyon Water District; one with the City of Tustin; one with Mesa Consolidated Water District; and one with the City of Orange. Future interconnections could account result in an additional 10 interconnections with various surrounding agencies.

IRWD is also a member of the Water Emergency Response Organization of Orange County (WEROC) and the State Emergency Management System (SEMS). District personnel have been cross-trained in emergency planning for water, wastewater and recycled water systems. In the potable water system, there will be access to multiple sources of supply and storage facilities. Existing "emergency" interconnections can be opened to regular service, which will increase access and reliability of water supply. Reservoir storage can be allocated to cross support all systems, which will increase reliability and flexibility of water operations and reduce the need for redundant storage capacity.

IRWD plans for and responds to emergency incidents, including power outage, earthquakes, fires, floods and hazardous materials incidents. The table below provides summary of actions in response to possible catastrophes which are intended to minimize the impacts of supply interruption on IRWD's service area.

Preparation Actions for a Catastrophe	
Possible Catastrophe	Summary of Actions
Regional power outage	Request information from So. Cal Edison on estimated down time; if backup generation is available assess ability to supply fuel for extended periods; estimate potable water requirements under emergency condition and determine if needs can be met; increase disinfectant residual as a precaution of potential contamination; notify affected users; issue "Boil Water" or "Do Not Drink" orders as needed; initiate back up portable pumping equipment as needed to serve areas of limited storage. Notify customers, media, state and local authorities if service is disrupted or significant demand management is necessary.

Earthquake	Activate Emergency Operations Center (EOC); Contact emergency assistance (local police, local fire) as necessary; notify customers, media, state and local authorities if service is disrupted or significant demand management is necessary; contact neighboring water agencies for mutual aid arrangements and open connections if needed. Issue "Boil Water" or "Do Not Drink" orders as needed.
Flood	Contact local representative of National Weather Service for information on exact location and probable extent (stage) of flooding relative to utility facilities. Activate EOC; elevate in-place or remove water-sensitive equipment; assemble mobile stand-by generators and auxiliary water pumps; install sewer backflow valves; notify neighboring utilities of emergency response support if help needed; notify customers, media, city and other authorities that service may be disrupted or that demand reductions may be necessary.
Water Supply Interruption	Depending on the percentage of water reduction needed (i.e. 5% to 50%) IRWD will institute its water prohibitions within its water shortage contingency plan. Take action to provide alternate drinking water supply and fire protection, including local interconnections with neighboring sources, area water haulers, temporary storage options, etc. Chlorine residuals increased temporarily as needed. Valve off portions of the distribution system until above ground storage tanks are refilled. Issue "Boil Water" or "Do Not Drink" orders as needed
Structural damage from explosive device	Perform damage assessment, determine how damage affects the system; isolate damaged area from rest of system and take measures to bypass damaged area. Based on extent of damage consider alternative treatment schemes if necessary Physically secure system and implement security procedures throughout the system. Notify local law enforcement and Department of Health Services (DHS). Issue "Boil Water" or "Do Not Drink" orders as needed.
Threat of or possible contamination to water system	Notify local law enforcement and DHS; take actions to isolate portions of system containing suspect water; issue "Boil Water" or "Do Not Drink" orders as needed; take action to provide alternate drinking water supply and fire protection

D. Mandatory Prohibitions (§ 10632(d))

Certain prohibitions contained in IRWD's Rules and Regulations (Section 15) are in effect at all times regardless of whether any declared shortage condition is in effect. IRWD further defines mandatory restrictions and prohibitions in its WSCP based on declared water shortage level as indicated in Table 36 below.

Table 36
Water shortage contingency — mandatory prohibitions

Prohibitions	Stage When Prohibition Becomes Mandatory
Gutter flooding	Always in Effect
Leaks	Always in Effect
Washing down hard surface areas	Always in Effect
Water waste	Always in Effect
Eliminate outdoor use	4
Ban on car-washing and pool filling	4
Restrictions and enforcement	4

E. Consumption Reduction Methods (§ 10632(e))

IRWD recognizes that it is best to caution of a water shortage as early as possible, at a minimal level, to encourage voluntary rationing and to gain public support and participation, and reduce the likelihood of more severe shortage levels later. Responses to water shortages must be made early on to prevent severe rationing and economic impacts.

IRWD would employ a range of measures in response to potential shortages depending on the level and duration. While the measures will be applied incrementally, IRWD's WSCP builds in a level of flexibility to adopt additional measures to ensure the appropriate level of demand reduction. Under the District's allocation-based conservation rate structure that is always in effect, customer allocations are limited to the amount that is reasonable for the customer's needs and property characteristics, and reflect the exclusion of these types of wasteful water uses. The use of IRWD's allocation-based rates and the assessment of higher rates for over-allocation or wasteful use provides IRWD with an additional strategy to help achieve demand reductions.

In order to achieve the necessary demand reductions, IRWD's measures will progress from voluntary reductions to reduction of discretionary uses through financial incentives or restrictions to reduction of non-discretionary uses through financial incentives or restrictions based on the level of the shortage. Most shortages, unless extreme (Level Four or system outage), can be addressed with a combination of voluntary measures and a reduction of discretionary uses through financial incentives.

It should be noted that the District has implemented on-going water use efficiency and outreach programs since the early 1990's, and those efforts combined with the allocation-based tiered rates, have resulted in somewhat hardened levels of demand. IRWD will employ additional strategies, discussed in detail in the WSCP, to achieve the necessary demand reductions in a shortage situation.

An excess use charge based upon the allocation-based rate structure is sufficient to encourage demand reduction to required levels. IRWD also has the ability to establish restrictions on water

use or to discontinue service in the case of repeat violators under the Water Code of the State of California.

It should be noted that approximately 90% of IRWD's landscape accounts are served with recycled water which is considered to be drought tolerant supply. Therefore, if no shortage of recycled water supplies exists, consumption reduction may only apply to potable water accounts and non-potable water accounts (mostly agricultural) since these may be dependent on imported non-potable supplies which would most likely be reduced in a drought.

Through the adopted resolutions, IRWD has provisions for consumption reduction methods to be implemented if necessary based on the water shortage level declared. The consumption reduction measures used by IRWD and included in the WSCP are summarized in Table 37.

Table 37
Water shortage contingency — consumption reduction methods

Consumption Reduction Methods	Stage When Method Takes Effect	Projected Reduction (%)
Enhanced public awareness campaign	1	5%
Target over-allocation customers for surveys/assistance	1	5%
Review and adjust customer allocations and or billing tiers as necessary	1 or 2	5%
Reduce potable and untreated irrigation and ag allocations by 30% or other percentage to be specified	2	6%
Reduce potable and untreated irrigation and ag allocations by 60% or other percentage to be specified	3	6%
Reduce CII allocations by 10% or other percentage to be specified	3	2%
Increase rates for over-allocation tiers	3 or4	15%
Further reduction of allocations, tightening of tiers and rate increase to achieve necessary reduction	4	5%
Eliminate non-recycled water outdoor use (100% reduction)	4	15%
Ban on car washing and pool-filling	4	1%
Mandatory restrictions and enforcement, as necessary	4	5%+

Extreme Shortage Measures

A Level Four shortage of up to 50%, would require further adjustments to billing allocations and the use of all the Demand Management/Allocation-Based Rates strategies described the WSCP In addition, IRWD may determine that it is necessary to use mandatory restrictions and possible discontinuation of non-health and safety related service in order to achieve the necessary demand reductions in a Level Four shortage. In addition to the measures implemented in all prior stages, IRWD may impose any combination of the following mandatory measures and rationing to alleviate demands. Additional detail is provided in the WSCP.

1. *Potable Irrigation Ban*: Outdoor irrigation would be the initial target for any demand reductions. Demand reductions or eliminations that cannot be met through voluntary

measures and financial incentives related to adjustments in the allocation based rate structure, would be attained through a ban on potable irrigation.

2. *Ban on car-washing and pool-filling:* Demand reductions on car-washing and pool filling that cannot be achieved through voluntary measures and financial incentives related to adjustments in the allocation-based rate structure would be attained through a ban on these actions.
3. *Flow restrictors:* Under extreme conditions of noncompliance, the District could install flow restrictors in individual service lines. Thus, water would be available for drinking, cooking, sponge baths, and slow fill of toilet tanks, but showers and other high volume type uses would not be possible. Under these conditions individual customer reaction would be severe. It would probably be necessary to augment the customer service field service staff to maintain surveillance of these services to assure that unauthorized changes are not made by the customer.
4. *Mandatory Restrictions and Fines:* The District's ability to establish restrictions on water use and to possibly discontinue non-health and safety related service in the case of repeat violators is provided for under the Water Code of the State of California Chapters 3 and 3.5).

F. Penalties for Excessive Use (§ 10632(f))

IRWD's Rules and Regulations (Section 15) provide for enforcement and penalties that may apply to violators during a water shortage. An excess use charge based upon the allocation-based rate structure, which is always in effect, is sufficient to encourage demand reduction to required levels. Depending on the level of shortage, IRWD may reduce customer billing allocations, tighten the tiers, increase rates, or some combination of those strategies to obtain the necessary reductions. IRWD also has the ability to establish restrictions on water use or to discontinue service in the case of repeat violators under the Water Code of the State of California. Penalties for IRWD are identified based on the shortage conditions in Table 38 below.

Table 38
Water shortage contingency — penalties and charges

Penalties or Charges	Stage When Penalty Takes Effect
Penalty for excess use	4
Charge for excess use (over-allocation billing tiers)	Always in Effect

G. Analysis of Impacts on Revenue and Expenditure and Measures (§ 10632(g))

The California Code Section 10632(g) requires an analysis of the impacts of each of the actions taken for conservation and water restriction on the revenues and expenditures of the water supplier. IRWD's WSCP does not provide a detailed analysis of revenue and expenditure impacts

of water shortages because IRWD's billing structure is designed to be insulated from revenue swings resulting from deviations between actual and budgeted water sales and from declining or reduced water sales. IRWD's billing structure consists of a fixed meter charge and a commodity charge based on the number of units of water used. Meter charges are set to meet IRWD's fixed costs of operation (e.g. salaries, supplies, etc.). The base commodity charge is set to match the cost of producing and purchasing water. Therefore, IRWD can recover all fixed costs regardless of the quantity of water sold, whereas the water sales at any level will cover the costs of providing water. This system has proven to be effective in balancing revenue and expenditures. The following Tables show components of revenue and expenditure impacts that have been evaluated by IRWD and found no impact on IRWD revenues and expenditures.

Actions and Conditions that Impact Revenues	
Type	Anticipated Revenue Reduction
Reduced sales	no impact
Development of reserves	no impact
Impact of supplier's higher rates (Tier 2)	no impact

Actions and Conditions that Impact Expenditures	
Category	Anticipated Cost
Change in quantity of sales	no impact
Increased staff salaries/overtime	no impact
Increased costs of new supplies/transfers/exchanges	no impact

Proposed Measures to Overcome Revenue Impacts	
Names of Measures	Summary of Effects
Review of rate adjustment	IRWD can revise its rate structure during water shortage stages which can increase commodity sale revenues if needed to offset MWD shortage tier rates.
Reserves	IRWD maintains reserves that can stabilize water rates during times of reduced water sales
Reduce overhead or decreased capital expenditures	If necessary, IRWD can reduce overhead and postpone capital expenditures

Proposed Measures to Overcome Expenditure Impacts	
Names of measures	Summary of Effects
Reserves	IRWD maintains reserves that can be used to overcome expenditure impacts caused by water shortage.
Reduce overhead or decreased capital expenditures	If necessary, IRWD can reduce overhead and postpone capital expenditures

Pricing Policy. IRWD's pricing policy is designed to recover its operating cost and discourage wasteful uses. The pricing policy is evaluated on a yearly basis and adjusted as warranted.

The Allocation-Based Rate Structure developed by IRWD is intended to function as a tool to promote water use efficiency commensurate with water supply conditions. The structure includes a five-tiered system for residential customers and a four-tiered system for nonresidential customers, and charges progressively higher rates for progressively higher amounts of water used. Usage blocks for residential customers are based upon the type of dwelling and irrigated landscape. Landscape irrigation allocations are based on site acreage and actual weather data.

The pricing policy for potable, non-agricultural use consists of three charges:

(1) Monthly service charge
(2) Commodity charge
(3) Pumping Surcharge

The monthly service charge varies with the size of the water meter connection. This charge is intended to recover the operating and maintenance costs incurred. The variable ascending commodity charge recovers the cost of purchased and pumped water. This structure establishes an increasing unit cost per 100 cubic feet of water, as described in the next section. The pumping surcharge is added to the commodity rate of those users who reside at higher elevation areas. The surcharge is based on prevailing energy costs.

In an effort to promote water conservation, IRWD provides untreated and recycled water supplies at lower rates than potable water. The untreated water pricing for agricultural customers does not include a service charge, only a commodity charge to recover the cost of water purchases, although a service charge is assessed for non-agricultural untreated water customers. The recycled water pricing policy for customers includes a monthly service charge identical to the potable system and a lower commodity rate to encourage the use of recycled water. Moreover, as an incentive to reduce water consumption, IRWD provides a reduced sewer service charge for residential customers who use less domestic water.

IRWD prepares monthly reports, which outline water use by customer type. These reports are used to evaluate water use trends and track conservation efforts.

H. Water Shortage Contingency Ordinance/Resolution (§ 10632(h))

In February 2009, the IRWD Board adopted Resolution No. 2009-5 approving an amended Water Shortage Contingency Plan (SCP). A copy of the Resolution is included in Appendix E.

I. Affects of Water Quality (§ 10634)

It is IRWD's top priority to provide customers with safe, high quality drinking water. IRWD's drinking water is safe and meets or exceeds all quality standards set by both the state and federal government. IRWD's Water Quality staff continuously monitors the water supply,

conducting over a quarter of a million laboratory tests each year from water taken from over 99 sample points throughout the District. IRWD owns and operates a state-of-the-art Water Quality Laboratory that is state certified and one of the best equipped water laboratories in Southern California. IRWD distributes an informative Annual Water Quality Report to customers each June along with their bill. The Water Quality Report provides information on the source of the water, water testing results and how water quality compares with regulatory standards. Additionally, the report answers commonly asked questions about water quality.

Per MWD's 2010 RUWMP, MWD has reviewed its concerns of water quality in its water management programs. MWD responds to water quality concerns by concentrating on protecting the quality of the source water and development water management programs that maintain and enhance water quality. Contaminants that cannot be sufficiently controlled through protection of source waters are handled through changed water treatment protocols or blending. These practices can increase the costs and or reducing operating flexibility and safety margins. In addition, MWD has developed enhanced security practices and policies in response to national security concerns. (MWD 2010 RUWMP).

IRWD does not foresee any affects to its water supplies from water quality impacts. Table 30 indicates that IRWD anticipates no water quality impacts to supplies. IRWD's potable water supplies shown in Table 16 for years 2010, 2015, 2020, 2025 and 2030 are all high quality water supply sources available to meet IRWD's demands.

Table 30

Water quality — current and projected water supply impacts

Water source	Description of condition	2010	2015	2020	2025	2030	2035
None	None projected	None projected	None projected	None projected	None projected	None projected	None projected

Law

10631 (c)(1). Describe the reliability of the water supply and vulnerability to seasonal or climatic shortages, to the extent practicable, and provide data for each of the following: (A) an average water year, (B) a single dry water year, (C) multiple dry water years.

10632 (b) An estimate of the minimum water supply availability during each of the next three water years based on the driest three-year historic sequence for an agency's water supply.

10632 (i) A mechanism for determining actual reductions in water use pursuant to the urban water shortage contingency analysis.

10635 (a) Every urban water supplier shall include, as part of it urban water management plan, an assessment of the reliability of its water service to its customers during normal, dry and multiple dry water years. This water supply and demand assessment shall compare the total water supply sources available to the water supplier with the total projected water use over the next 20 years, in five-year increments, for a normal water year, a single dry water year, and multiple dry water years. The water service reliability assessment shall be based upon the information compiled pursuant to Section 10631, including available data from state, regional or local agency population projections within the service area of the urban water supplier.

J. Reliability of Supply (§ 10631(c)(1) and 10631(c)(2))

IRWD has taken an integrated approach to developing a diversity of supply sources to achieve a reliable and economical water supply system operation. Development of groundwater, both untreated and treated, and expanded recycled water is projected to reduce the reliance on imported water supply. Imported water supplies will remain a source to provide supplemental supply, as well as provide redundancy in the event of shutdowns or emergency outages.

IRWD's water supply management program is aimed at maximizing the efficient use of existing supplies and to assure adequate supplies will be available to meet future water demands for its service area. Under IRWD's supply model, adequate supplies exist to meet demands. As part of its WRMP, IRWD forecasts minimum water supply availability for each of its sources of supply and projects total water supply for subsequent years.

IRWD's supplies remain essentially constant between normal, single-dry and multiple-dry years. This result is due to the fact that groundwater and MWD imported water account for all of IRWD's potable supply, and reclaimed water, groundwater and imported water comprise most of IRWD's nonpotable supply. Groundwater production typically remains constant or may increase on an interim basis in cycles of dry years, even if overdraft of the basin temporarily increases, as groundwater producers reduce their demand on imported supplies to secure reliability.

Imported Water Management.

MWD, the regional wholesale agency, manages the imported water supplies delivered to IRWD. MWD's policies and practices that maximize the efficient use of supplies are addressed in MWD's 2010 RUWMP update. The details of the regional coordination and operation of the water supply

during a drought are included in both MWD's and MWDOC's 2010 RUWMPs. The MWD policies and practices that maximize the efficient use of supplies are addressed in MWD's 2010 RUWMP and its Integrated Resource Plan ("IRP), IRP Update and the Water Surplus and Drought Management Plan (WSDM). MWD's RUWMP summarizes these efforts and provides information concerning the availability of the supplies to its entire service area.

In 1996, MWD completed its IRP to establish regional targets for the development of water resources and a preferred resource mix which would ensure MWD would meet the region's present and future needs for dependable supplies without interruption through 2025. In 2004 MWD completed its IRP Update with three objectives 1) to review the goals and achievements of the 1996 IRP, 2) to identify changed conditions for water resource development and 3) to update the resource targets through 2025. It calls for investments in water conservation, recycled, groundwater treatment, storage and water transfers to enhance supply reliability, flexibility and diversity.

In the 2010 IRP Update, MWD identified changes to the long-term plan and established direction to address the range of potential changes in water supply planning. The IRP also discusses dealing with uncertainties related to impacts of climate change, as well as actions to protect endangered fisheries. Based on MWD's Findings and Conclusions as stated in the MWD 2010 IRP Update, MWD's reliability goal that full-service demands at the retail level will be satisfied for all foreseeable hydrologic conditions remains unchanged in the 2010 IRP Update, and MWD will accomplish this through its core resources strategies. The 2010 IRP Update emphasizes an evolving approach and suite of actions to address the water supply challenges that are posed by uncertain weather patterns, regulatory and environmental restrictions, water quality impacts and changes in the state and the region. MWD's Adaptive Resource Management Strategy includes three components: Core Resources Strategy, Supply Buffer Implementation and Foundational Actions which together provides the basis for the 2010 IRP Update. The 2010 IRP Update expands the concept of developing a planning buffer from the 2004 IRP Update by implementing a supply buffer equal to 10 percent of the total retail demand. MWD will collaborate with the member agencies to implement this buffer through complying with Senate Bill 7 which calls for the state to reduce per capita water use 20 percent by the year 2020.

Demands on MWD

Estimates of demands on MWD for the 2010 RUWMP were derived by first estimating the total retail demands for the region and then factoring in impacts of conservation. MWD also uses projections of local supplies and expected local supply programs to arrive at its total demands. MWD estimates demands for single dry year, multiple dry years and average years. MWD's 2010 RUWMP and IRP Update summarizes the reliability analyses which shows that MWD can maintain reliable supplies under conditions that have existed in past dry periods throughout the period 2010 through 2035. MWD has also identified buffer supplies, including additional groundwater storage and transfers that could serve to supply additional water needs (MWD 2010 RUWMP and IRP).

Based on information provided in MWD's 2010 RUWMP, MWD has undertaken extensive analysis of system reservoirs, forecasted demands and probable hydrologic conditions to estimate the likelihood of reaching a shortage stage through 2010. The results of the analysis demonstrated

the benefit of coordinated management of regional supply and storage resources. As to imported water, MWD's 2010 RUWMP shows that MWD can maintain reliable supplies under the conditions that have existed in past dry periods through 2035, including a repeat of the 1990-1992 multiple dry-year hydrology and the 1977 single dry-year hydrology (MWD 2010 RUWMP). MWD states it is sufficiently reliable to meet full-service demands at the retail level for all foreseeable hydrologic conditions.

After estimating demands for single dry year, multiple dry years and average years, MWD's water reliability analysis and RUWMP identifies projected supplies to meet its demands. MWD's RUWMP tables show that the region can provide reliable water supplies under both the single driest year and the multiple dry year hydrologies.

MWD's WSDM Plan distinguishes between Shortages, Severe Shortages, and Extreme Shortages. When MWD must make net withdrawals from storage to meet demands, it is considered to be in a shortage condition. Under most of these stages, it is still able to meet all end-use demands for water. In 2008, MWD adopted its Water Surplus Allocation Plan (WSAP). The WSAP includes the specific formula for calculating its member agency supply allocations and the key implementation elements needed for administering an allocation (MWD 2010 RUWMP). Under a MWD imposed allocation, IRWD may supplement its imported supplies through temporarily increased groundwater production, implementation of its Water Shortage Contingency Plan, and importing its Kern County banked supplies to meet demands.

Groundwater Supply Management.

As also included in the "Groundwater Source" section above, OCWD is required to annually investigate the condition of the Basin, assess overdraft and accumulated overdraft, and determine the amount of water necessary for replenishment. OCWD has studied the Basin replenishment needs and potential projects to address growth in demand until 2020. This is described in detail in the OCWD MPR.

The Basin is actually managed to allow utilization of up to 500,000 acre-feet of storage capacity of the basin during dry periods, acting as an underground reservoir and buffer against drought. OCWD also operates the basin to keep the target dewatered basin storage at 200,000 acre-feet as an appropriate accumulated overdraft. Since the formation of OCWD in 1933, OCWD has made substantial investment in facilities, Basin management and water rights protection, resulting in the elimination and prevention of adverse long-term "mining" overdraft conditions. OCWD continues to develop new replenishment supplies, recharge capacity and basin protection measures to meet projected production from the Basin during normal rainfall and drought periods. (Source: 2008-2009 Engineer's Report on Groundwater Conditions, Water Supply and Basin Utilization in the Orange County Water District; OCWD MRP, *supra.*) OCWD's efforts include ongoing replenishment programs and planned capital improvements. It should be noted under OCWD's management of overdraft to maximize its use for annual production and recharge operations, overdraft varies over time as the Basin is managed to keep it in balance over the long term. The Basin is not operated on an annual safe-yield basis (OCWD MPR, section 3.2)

Finally, within the Basin, production of groundwater can exceed applicable basin production percentages on a short-term basis, providing additional reliability during dry years or emergencies. Additional groundwater production may increase on an interim basis in dry years, as producers reduce their use of imported supplies, and the Basin is "mined" in anticipation of the eventual availability of replenishment water. In addition, although typically IRWD production from the DRWF does not materially exceed the equivalent BPP (as discussed under "Groundwater"), the equivalent BPP is not an extraction limitation; it results in imposition of financial assessments on the excess production (See "BEA" discussion under Groundwater Section).

Non-Potable Water Management.

Water recycling has proven to be an effective "drought-proof" reliable supply as a result of the fact that sewage flows remain virtually unaffected by dry years. As mentioned, IRWD is undergoing expansion of its MWRP to provide additional recycled water as demands and sewage flows increase in the future.

As with the potable system, having several sources of supply provides reliability in the recycled water system—recycled water from the MWRP and LAWRP, untreated water from MWD, local runoff and some local groundwater. Reliability is further enhanced by seasonal storage capacity in Rattlesnake Reservoir, Sand Canyon Reservoir, San Joaquin Reservoir and Irvine Lake.

Only a small portion of IRWD's nonpotable supply, native water captured in Irvine Lake, is reduced in single-dry and multiple-dry years. Given the dependence of native water on rainfall for Irvine Lake, for purposes of water supply reliability, only a small portion of IRWD's share of 28,000 AFY of native water rights (4,000 AFY in normal years and 1,000 AFY in dry years) is shown in available supplies, based on averaging of historical data. However, IRWD's ability to supplement Irvine Lake storage with its imported untreated water supplies offsets the uncertainty associated with the native surface water supply.

In addition, significant quantities of "reserve" water supplies (excess of supplies over demands) will be available for IRWD to serve as a buffer against inaccuracies in demand projections, future changed in land use, or alterations in supply availability. In addition, the potential exists for the treatment and conversion of some reserve nonpotable supplies to potable water.

Table 28 shows IRWD supply reliability under historic conditions. Total supplies are referenced from Table 16 less 3,000 AF of native surface water which is estimated to be impacted during single and multiple dry water years. This reduction is also referenced in Table 31 below.

Table 28

Supply reliability — historic conditions

Average / Normal Water Year	Single Dry Water Year	Multiple Dry Water Years			
		Year 1	Year 2	Year 3	Year 4
Total Supplies (af)	148,751	148,751	148,751	148,751	148,751
Percent of Average/Normal Year:	98%	98%	98%	98%	98%

Table 29 shows factors resulting in inconsistency of IRWD supply.

Table 29
Factors resulting in inconsistency of supply

Water supply sources[1]	Specific source name, if any	Limitation quantification	Legal	Environmental	Water quality	Climatic	Additional information
Irvine Lake - Nonpotable	Irvine Lake	4,000				x	

Units (circle one): *acre-feet per year* *million gallons per year* *cubic feet per year*

[1]From Table 16.

Basis for Water Year

As stated, due to the diversity of IRWD's supplies, supplies remain essentially constant between normal, single-dry and multiple dry years. This result is due to the fact that groundwater and MWD imported water account for all of IRWD's potable supply, and recycled water, groundwater and imported water comprise most of IRWD's nonpotable supply. Groundwater production typically remains constant or increased in cycles of dry years, even if overdraft of the basin temporarily increases, as groundwater producers reduce their demand on imported supplies to secure reliability. Table 27 shows the basis of water year data IRWD used for the water supply reliability tables. IRWD utilizes the basis years from MWD's 2010 RUWMP to represent past dry periods through 2035, including a repeat of the 1990-1992 multiple dry-year hydrology and the 1977 single dry-year hydrology (MWD 2010 RUWMP). IRWD's average water year is represented in 2003.

Table 27
Basis of water year data

Water Year Type	Base Year(s)
Average Water Year	2003
Single-Dry Water Year	1977
Multiple-Dry Water Years	1990-92

K. Estimate of Minimum Supply for Next Three Years (§ 10632(b))

The UWMP Act requires quantification of the minimum water supply available during the next three years (e.g., 2011 to 2013) based on the driest three-year historic sequence for IRWD's water supply. For IRWD's supplies, the driest three year historic sequence is based on MWD's RUWMP historic sequence (1990-1992) and the driest single year hydrology in 1977. Table 31 below shows IRWD's expected supply reliability over the single dry, multiple dry and average years.

Table 31 Supply reliability — current water sources					
Water supply sources[1]		Average / Normal Water Year Supply[2]	Multiple Dry Water Year Supply[2]		
			Year 2011	Year 2012	Year 2013
Potable Supplies					
Purchased MWD Treated		49,916	49,916	49,916	49,916
Groundwater		43,540	43,540	43,540	43,540
Baker Water Treatment Plant		0	0	0	0
Manning Water Treatment Plant		0	0	0	0
Future Groundwater Projects		0	0	0	0
Non-Potable Supplies					
Recycled Water		26,135	26,135	26,135	26,135
Purchased MWD Untreated		24,262	24,262	24,262	24,262
Native (Surface Water)		4,000	1000	1000	1000
Non-Potable groundwater		3,898	3,898	3,898	3,898
Total		151,751	148,751	148,751	148,751
Percent of normal year:			98%	98%	98%

Units (circle one): *acre-feet per year* *million gallons per year* *cubic feet per year*
[1]From Table 16.
[2]See Table 27 for basis of water type years.

IRWD's Water use factors; dry-year increases.
IRWD employs water use factors to enable it to assign water demands to the various land use types and aggregate the demands. The water use factors are based on average water use and incorporate the effect of IRWD's tiered-rate conservation pricing and its other water conservation programs. The factors are derived from historical usage (billing data) and a detailed review of water use factors within the IRWD service areas conducted as a part of the WRMP.

Water demands also reflect normal hydrologic conditions (precipitation). Lower levels of precipitation and higher temperatures will result in higher water demands, due primarily to the need for additional water for irrigation. To reflect this, IRWD's base (normal) WRMP water demands are increased 7% during both "single-dry" and "multiple-dry" years. This is consistent with IRWD's 2005 UWMP and historical regional demand variation as documented in the MWD's IRP (1996) (Volume 1, page 2-10). In addition, MWDOC has documented in their 2010 RUWMP, a demand that is impacted by single or multiple dry years focused on per capita use. Per capita use over the period 2001-2009 was used and MWDOC looked at the highest per capita use over the period divided by average per capita use. The resulting factor was 6.6% for all of MWDOC service area. IRWD's percentage impact was 6.7% which is close to the 7% assumption

that has traditionally been used by IRWD. Tables 33 and 34 below represent these increases in demands as projected by IRWD.

Tables 32-34 show IRWD's supply and demand comparison under the three climate conditions: base (normal) conditions and single-dry and multiple-dry year conditions. The single and multiple dry year Tables 33 and 34 show increases in IRWD's demands as a result of dry hydrologies.

Table 32
Supply and demand comparison — normal year

	2015	2020	2025	2030	2035
Supply totals (from Table 16)	176,610	180,674	180,674	180,674	180,674
Demand totals (From Table 11)	110,309	120,196	127,692	128,651	129,592
Difference	66,301	60,478	52,982	52,023	51,082
Difference as % of Supply	38%	33%	29%	29%	28%
Difference as % of Demand	60%	50%	41%	40%	39%

Units are in acre-feet per year.

Table 33
Supply and demand comparison — single dry year

	2015	2020	2025	2030	2035
Supply totals[1,2]	173,610	177,674	177,674	177,674	177,674
Demand totals[2,3,4]	118,031	128,609	136,631	137,657	138,663
Difference	55,579	49,065	41,043	40,017	39,011
Difference as % of Supply	32%	28%	23%	23%	22%
Difference as % of Demand	47%	38%	30%	29%	28%

Units are in acre feet per year
[1]Consider the same sources as in Table 16. If new sources of water are planned, add a column to the table and specify the source, timing, and amount of water.
[2]Provide in the text of the UWMP text that discusses how single-dry-year water supply volumes were determined.
[3]Consider the same demands as in Table 3. If new water demands are anticipated, add a column to the table and specify the source, timing, and amount of water.
[4]The urban water target determined in this UWMP will be considered when developing the 2020 water demands included in this table.

Table 34
Supply and demand comparison — multiple dry-year events

		2015	2020	2025	2030	2035
Multiple-dry year first year supply	Supply totals[1,2]	173,610	177,674	177,674	177,674	177,674
	Demand totals[2,3,4]	118,031	120,196	127,692	128,651	129,592
	Difference	55,579	57,478	49,982	49,023	48,082
	Difference as % of Supply	32%	32%	28%	28%	27%
	Difference as % of Demand	47%	48%	39%	38%	37%
Multiple-dry year second year supply	Supply totals[1,2]	173,610	177,674	177,674	177,674	177,674
	Demand totals[2,3,4]	118,031	120,196	127,692	128,651	129,592
	Difference	55,579	57,478	49,982	49,023	48,082
	Difference as % of Supply	32%	32%	28%	28%	27%
	Difference as % of Demand	47%	48%	39%	38%	37%
Multiple-dry year third year supply	Supply totals[1,2]	173,610	177,674	177,674	177,674	177,674
	Demand totals[2,3,4]	118,031	120,196	127,692	128,651	129,592
	Difference	55,579	57,478	49,982	49,023	48,082
	Difference as % of Supply	32%	32%	28%	28%	27%
	Difference as % of Demand	47%	48%	39%	38%	37%

Units are in acre-feet per year.

[1]Consider the same sources as in Table 16. If new sources of water are planned, add a column to the table and specify the source, timing, and amount of water.

[2]Provide in the text of the UWMP text that discusses how single-dry-year water supply volumes were determined.

[3]Consider the same demands as in Table 3. If new water demands are anticipated, add a column to the table and specify the source, timing, and amount of water.

[4]The urban water target determined in this UWMP will be considered when developing the 2020 water demands included in this table.

As mentioned, IRWD's supplies remain essentially constant between normal, single-dry and multiple-dry years. This result is due to the fact that groundwater and MWD imported water account for all of IRWD's potable supply, and reclaimed water, groundwater and imported water comprise most of IRWD's non-potable supply. Groundwater production typically remains constant or increases in cycles of dry years, even if overdraft of the basin temporarily increases, as groundwater producers reduce their demand on imported supplies to secure reliability. As to imported water, MWD's 2010 RUWMP shows that MWD can maintain reliable supplies under the conditions that have existed in past dry periods through 2035, including a repeat of the 1990-

1992 multiple dry-year hydrology and the 1977 single dry-year hydrology. Reclaimed water production also remains constant, and is considered "drought-proof" as a result of the fact that sewage flows remain virtually unaffected by dry years. Only a small portion of IRWD's non-potable supply, native water captured in Irvine Lake, is reduced in single-dry and multiple-dry years. The foregoing factors also serve to explain why there is no difference in IRWD's supplies between single-dry and multiple-dry years.

IRWD also maintains "Reserve" water supplies (excess of supplies over demands) that are available to serve as a buffer against inaccuracies in demand projections, future changes in land use, or alterations in supply availability.

Conservative estimates of annual potable and non-potable imported supplies have been made based on connected delivery capacity and additional supplies are expected to be available from these sources, based on legal entitlements, historical uses and information provided by MWD. Information provided by MWD in its 2010 RUWMP, as the imported water supplier, concerning the adequacy of its regional supplies, demonstrates MWD's inclusion of reserves in its regional supply assessments. Although groundwater supply amounts shown assume production levels within applicable basin production percentages described herein, production of groundwater can exceed applicable basin production percentages on a short-term basis, providing additional reliability during dry years or emergencies.

SECTION 6 DEMAND MANAGEMENT MEASURES

Law

10631(f)(1) and (2) Describe and provide a schedule of implementation for each water demand management measure that is currently being implemented, or scheduled for implementation, including the steps necessary to implement any proposed measures, including, but not limited to, all of the following: (A) water survey programs for single-family residential and multifamily residential customers; (B) residential plumbing retrofit; (C) system water audits, leak detection, and repair; (D) metering with commodity rates for all new connections and retrofit of existing connections; (E) large landscape conservation programs and incentives; (F) high-efficiency washing machine rebate programs; (G) public information programs; (H) school education programs; (I) conservation programs for commercial, industrial, and institutional accounts; (J) wholesale agency programs; (K) conservation pricing; (L) water conservation coordinator; (M) water waste prohibition; (N) residential ultra-low flush toilet replacement programs.

10631(f)(3) A description of the methods, if any, that the supplier will use to evaluate the effectiveness of water demand management measures implemented or described under the plan.

10631(f)(4) An estimate, if available, of existing conservation savings on water use within the supplier's service area, and the effect of the savings on the supplier's ability to further reduce demand.

10631(g) an evaluation of each water demand management measure listed in paragraph (1) of subdivision (f) that is not currently being implemented or scheduled for implementation. In the course of the evaluation, first consideration shall be given to water demand management measures, or combination of measures, that offer lower incremental costs than expanded or additional water supplies. This evaluation shall do all of the following: (1) Take into account economic and noneconomic factors, including environmental, social, health, customer impact, and technological factors; (2) Include a cost-benefit analysis, identifying total benefits and total costs; (3) Include a description of funding available to implement any planned water supply project that would provide water at a higher unit cost; (4) Include a description of the water supplier's legal authority to implement the measure and efforts to work with other relevant agencies to ensure the implementation of the measure and to share the cost of implementation.

IRWD is a signatory to the Memorandum of Understanding Regarding Water Conservation in California (MOU) and therefore implements programs designed to comply with or exceed the requirements. IRWD provides the detail of the water demand management activities in its FY 2008/09 and FY 2009/10 Annual BMP Reports. IRWD has selected to comply with the BMPs using the CUWCC's gpcd approach. This requires implementation of a set of foundational BMPs and a gpcd calculation, which is different from the gpcd calculation used for purposes of SBx7-7. Copies of IRWD's CUWCC BMP coverage reports, which show that IRWD is on-track with meeting the requirements, are provided in Appendix F.

A. BMP Implementation

Foundational BMPs:

The CUWCC has foundational BMPs which all agencies are required to implement. The foundational BMPs are:

1. Utility Operations
    a. Conservation Coordinator
    b. Water Waste Prevention
    c. Water Loss Control
    d. Metering with Commodity Rates
    e. Retail Conservation Pricing

2. Education Programs
    a. Public Information Programs
    b. School Education Program

B. GPCD Compliance Option

In addition to the Foundational BMPs, agencies have the option of implementing Programmatic BMPs or they make use a Flex Track approach. The Flex Track provides agencies with flexibility to implement a combination of programs within their service area that results in the same level of water savings or greater than they would have been required to attain with the Programmatic Approach. In June 2009, the CUWCC adopted a third option which is a GPCD Compliance Option. The CUWCC GPCD option is the approach, in conjunction with the required foundational BMPs, which IRWD has chosen to use for compliance with the BMPs.

One of the benefits of this approach is that it provides a measure of the water use efficiency and demand management savings over time. The CUWCC uses a 10-year fixed baseline period from 1997-2006. The formula to calculate the CUWCC's gpcd is as follows:

Potable Water GPCD = (PWI – PWS)/Pop/365; where

PWI = Potable Water into the retail water agency's distribution system
PWS = Potable Water taken out of the retail water agency's distribution system
Pop = Population of the retail water agency's service area.

C. IRWD's CUWCC Baseline

Year	GPCD
2006	229.4
2005	230.2
2004	253.5
2003	240.2
2002	268.1
2001	266.1
2000	283.9
1999	277.2
1998	246.6
1997	287.8

IRWD's CUWCC baseline of 258.3 is the average of the gpcd's over the 10-year 2006 to 1997 period.

D. IRWD's CUWCC GPCD Targets

The CUWCC's gpcd option requires an 18% reduction from the baseline by 2018, and incremental targets as shown below. IRWD's 2018 target is 211.8 gpcd.

IRWD's actual gpcd in 2010 is 214.3, and is below its 2010 incremental target of 249.0 gpcd.

IRWD is on track with the CUWCC's GPCD option. The actual percentage reduction from the baseline to 2010 is 17%. This water savings is primarily due to IRWD's long-term conservation efforts and ongoing implementation of programs that are designed to meet the BMP goals, although there is likely some influence from the economic recession.

Year	Report	Target		Highest Acceptable Bound	
		% Base	GPCD	% Base	GPCD
2010	1	96.4%	249.0	100%	258.3
2012	2	92.8%	239.7	96.4%	249.0
2014	3	89.2%	230.4	92.8%	239.7
2016	4	85.6%	221.1	89.2%	230.4
2018	5	82.0%	211.8	82.0%	211.8

E. Demand Management Measure Implementation

Specific strategies that IRWD relies upon to meet its foundational BMP requirements, promote water conservation, and to meet its GPCD targets are discussed below.

1. Retail Pricing

IRWD's allocation-based rate structure was instituted in 1991 to promote the efficient use of water, and is designed to provide customers a significant economic incentive to use the proper amount of water required to serve indoor, landscape, commercial/industrial and institutional demands. This is accomplished by setting a customized "allocation" for each customer account that is based upon a variety of factors such as: irrigated area, daily weather characteristics, number of residents, industrial or commercial business type, and other more unique characteristics such as the presence of a pool, livestock or specialized industrial equipment. The bases for the allocations were reviewed and updated in 2009 to reflect recent changes in plumbing codes and water use efficiency practices.

Water is sold to customers under a five tier structure based upon their monthly allocation which varies for landscape use relative to weather patterns. Customers using water within their allocation purchase water in the lower two tiers (including a below cost first tier) and are rewarded with very low water bills. Customers using in excess of their allocation also purchase water in one to three steeply ascending upper tiers, resulting in relatively high water bills and a strong pricing signal for excessive use. IRWD's 2010 commodity rates for each of the five tiers are shown below.

Tier	Rate Per CCF	Use (As a Percent of Allocation)
Low Volume Discount	$0.91	0-40%
Conservation Base Rate	$1.21	41-100%
Inefficient	$2.50	101-150%
Excessive	$4.32	151-200%
Wasteful	$9.48	201% +

Rates Effective July 1, 2010

IRWD also assesses a monthly fixed charge based upon meter size. This fixed charge provides adequate funding for all operating costs other than the water commodity itself and the district's water use efficiency and related programs. As such, IRWD enjoys revenue stability regardless of the amount of water sold or the degree of conservation experienced from customers' water use efficiency practices.

The rate structure not only signals customers when they are over-using water, but also signals IRWD as to which customers need the greatest degree of attention. This two-way communication helps IRWD focus its financial and staff resources efficiently. Customer service is also emphasized. For example, billing adjustments are provided for customers that have over-allocation use related to leaks if the customer shows evidence of the leak repair. In addition,

customers that have habitual over-allocation use are contacted by IRWD staff and offered leak detection services, as well as water use efficiency education and assistance.

Revenue from higher tier, over-allocation water use is "reinvested" to fund tailored programs and rebates for long-term improvements in water use efficiency and to support IRWD's urban runoff source control and treatment programs. The rate structure is designed to derive sufficient revenues from the over-allocation use tiers to completely fund these programs.

Since the introduction of IRWD's allocation-based rate structure in 1991, the following has been observed:

- The rate structure had an immediate effect on the landscape account usage with a 0.5 acre-foot per acre reduction in the first six months following its adoption.
- For landscape accounts, water consumption has dropped 31.5% solely attributable to the rate structure (Kennedy/Jenks 2008). Additional programs and incentives have resulted in a total reduction of 43%, from 4.4 to 2.5 acre-feet per acre since 1991. The associated energy savings with the reduction in imported water requirements is estimated at 1,250 kilowatt hours/acre/year.
- Residential demands have dropped 7% since 1991 as result of the implementation of the allocation-based rate structure (Kennedy/Jenks 2008).. The associated energy savings with the reduction in imported water requirements is estimated at 70 kilowatt hours per capita per year.
- Urban runoff (dry weather flow) in the major creek system has only nominally increased, while irrigated acreage has increased over 400%, from 3,300 acres in 1991 to 15,500 acres, presently.
- As a result of the strong economic signal provided with the rate structure and proactive customer outreach, fewer than 3% of residential customers currently pay the highest tier charges in any given month.
- Both residential and non-residential customers give IRWD high marks in customer satisfaction, with customer service rating of "excellent" from 87.1% of surveyed customers.
- The reductions in per capita and landscape water use have reduced IRWD's dependence on expensive imported water.

2. Tactical Incentives for Water Efficient Devices

IRWD's Tactical Incentives are financial incentives offered to customers for the installation of water efficient devices. IRWD's provides this funding based on the avoided water and wastewater costs. Although IRWD has been distributing and funding devices since 1990, in 2005 the program was modified. Since 2005, IRWD has provided over $3 million in tactical incentive for approximately 95,000 devices, with estimated lifetime water savings of almost 9,000 acre-feet.

The devices currently offered are listed below, with the exception of ultra-low flush toilets which were discontinued in 2008, and replaced with incentives for high efficiency toilets:

- High efficiency clothes washers
- High efficiency toilets
- Ultra-low flush toilets (discontinued)
- Rotating nozzles
- Cooling tower conductivity controllers
- Commercial clothes washers
- Residential and commercial weather-based irrigation controllers

3. Commercial/Industrial Performance-Based Program

IRWD offers tactical incentives to commercial, industrial and institutional (CII) customers to upgrade equipment and improve their water processes to provide greater water use efficiency. High use CII accounts are targeted for participation in the program. Performance-based funding is calculated based on $3 per 1,000 gallons saved within the first year. Up to 50% of the incentive can be made available up-front to help the customer initiate the project.

4. Landscape Water Use Efficiency

Landscape irrigation accounts for 40 to 50 percent of total water used in IRWD's service area. IRWD encourages optimum irrigation efficiency through the use of:

- Water allocations and a rate structure which reward efficiency and discourage waste.
- More low-water-use plants and less turf grass in landscape design.
- High-efficiency irrigation technology.
- Water-use efficiency surveys.
- Free residential and professional landscape workshops.
- Free web-based monthly performance reporting for landscape sites

5. Workshops and Tours

IRWD offers many workshops and tours to its customers as a part of ongoing outreach. Recent efforts have included successful partnerships with U.C. Cooperative Extension and the Master Gardeners to promote landscape water use efficiency.

6. Rules and Regulations

IRWD's adopted Rules and Regulations state:

- It is the desire of the District to effect conservation of water resources whenever possible, such measures being consistent with legal responsibilities to utilize the water resources of the State of California and the District.
- Facilities for irrigation of new or existing parks, median strips, landscaped public areas or landscaped areas, lawns or gardens surrounding single family homes, condominiums,

townhouses, apartments and industrial parks shall be designed and installed in such a way as to conserve water.

- Recycled water is considered a water resource by the District, therefore, the same restrictions shall apply for all uses of recycled water as for potable water.
- Rate and extent of application of water shall be controlled by the user so as to minimize run-off from irrigated areas.
- All water closets installed after January 1, 1991, must flush with 1.6 gallons of water or less.
- The following prohibitions are in effect at all times, regardless of whether a declared shortage is in effect:
    - Gutter flooding
    - Leaks
    - Washing down hard surface areas
    - Waste [*consistent with the definitions in Exhibit 1 to the Memorandum of Understanding Regarding Urban Water Conservation in California*]

7. Free Water Use Surveys

IRWD provides free on-site assistance and customized reports for customers in all sectors to help identify opportunities for water savings, eliminate water waste, and to recommend appropriate programs and strategies to reduce water demands.

8. Public Outreach and Social Media

IRWD's public outreach is aimed at promoting voluntary water conservation, something which IRWD has always done. IRWD's *Always Water Smart* program is always in effect. Conservation is a constant ethic and goal, promoted throughout the service area, regardless of drought conditions.

IRWD makes extensive use of its redesigned website www.alwayswatersmart.com and use of social media, including the use of Facebook and Twitter, to continually remind customers of the conservation message. The website heavily features conservation and easy to use irrigation scheduling guideline, information on tactical incentives, and a new Beautiful Landscapes section which focuses on California Friendly landscaping and water efficient irrigation. IRWD also informs its customers through billing inserts, mailers, water conservation booths, newsletters, community association meetings, and local public events.

9. Education Programs

The District has provided free innovative student water education programs since the mid-1970's. These programs are available to students and teachers from kindergarten through college in any public, private or home school within our service area. From student education programs to resident tours to our exciting education partnerships, IRWD's commitment to community education is boundless. Today, through an exciting partnership with the Discovery Science Center, we offer exceptional education programs meeting California curriculum content standards and bringing water education to life for the students in our service area. IRWD also offers customized programs for high school and college classes highlighting a wide variety of topics related to water and environmental resources.

10. Water Loss Control

IRWD proactively implements system leak detection and water loss reduction. IRWD follows the guidelines in the 3rd edition of the AWWA M36 Water Audits and Loss Control Programs. These procedures were incorporated into the CUWCC's BMPs in 2009, and were easily adopted by IRWD since most of the requirements were already being met or exceeded.

11. Incentive Pricing

In an effort to promote water conservation, IRWD provides untreated and recycled water supplies at lower rates than potable water. The untreated water pricing does not include a service charge, only a commodity charge to recover the cost of water purchases. The recycled water pricing policy includes a monthly service charge identical to the potable system and a lower commodity rate to encourage the use of recycled water. Moreover, as an incentive to reduce water consumption, IRWD provides a reduced sewer service charge for residential customers who use less domestic water.

12. Regional Conservation Programs

MWD and MWDOC implement a number of conservation activities in Southern California at a regional level in which IRWD actively participates. These conservation activities are addressed at length in MWDOC's and MWD's RUWMPs.

SECTION 7 CLIMATE CHANGE

DWR has suggested that urban water suppliers consider in its 2010 UWMP potential water supply and demand effects related to climate change. Below summarizes IRWD's work to date under the Global Warming Solutions Act and MWD's discussion of the climate change impacts to its water supplies.

AB32

The Global Warming Solutions Act (Assembly Bill 32, AB32) set a goal for California's carbon emissions to be reduced to 1990 levels by year 2020. The California Air Resources Control Board is the lead agency for implementing AB32 and established a mandatory facility reporting limit of 25,000 metric tons of Carbon Dioxide Equivalents (CO_2e) per year. IRWD's energy use is a major component of the District's operating budget and green house gas (GHG) emissions. IRWD uses a variety of energy sources in its operations; however, none of IRWD's facilities exceed the mandatory reporting limit. Nevertheless, IRWD is interested in taking steps to quantify and reduce its carbon footprint. IRWD recently completed a contract to develop a GHG inventory for calendar year 2008. Staff used the 2008 approach to develop a GHG inventory for calendar year 2009.

The objective of IRWD's work to date:

- Establish the physical and temporal boundaries for which IRWD should be tracking GHG emissions.
- Quantify current and past levels of GHG emissions within IRWD consistent with the established physical and temporal boundaries.
- Assist IRWD in identifying existing and planned projects that may be considered for "early action offsets" and/or "cap-and-trade opportunities".
- Identify potential future activities the District should consider to reduce future GHG emissions and position the District for additional "early action offsets" and/or "cap-and-trade opportunities."
- Develop and implement a software based system to assist IRWD in the storage, reporting and displaying of GHG emission information.

Additionally, IRWD is pursuing the development of an Energy and GHG Master Plan which will identify strategies for making energy efficiency improvements, methods of reducing GHG emissions and recommendations for investing in cost effective renewable energy programs. IRWD is making great effort to increase energy efficiency where ever possible and implement GHG mitigation programs and policies for its facilities and operations.

Impact of Climate Change on IRWD's Imported Water Supplies

In MWD's 2010 IRP Update, MWD recognizes there is a significant uncertainty in the impact of climate change on water supply and changes in weather patterns could significantly affect water supply reliability. MWD plans to hedge against supply and environmental uncertainties by

implementing a supply buffer equivalent to 10 percent of total retail demand. This buffer will be implemented through meeting the SBx7-7 water use efficiency goals, implementing aggressive adaptive actions, development of local supplies and transfers.

Per MWD's RUWMP, MWD continues to incorporate current climate change science into its planning efforts. As stated in MWD's RUWMP, the 2010 IRP Update supports the MWD Board adopted principles on climate change by: 1) Supporting reasonable, economically viable, and technologically feasible management strategies for reducing impacts on water supply, 2) Supporting flexible "no regret" solutions that provide water supply and quality benefits while increasing the ability to manage future climate change impacts, and 3) Evaluating staff recommendations regarding climate change and water resources against the California Environmental Quality Act to avoid adverse effects on the environment.

Potential climate change impacts on state, regional and local water supplies and relevant information for the Orange County hydrologic basin and Santa Ana Watershed have not been sufficiently developed at this time to permit IRWD to assess and quantify the effect of any such impact on its water supplies.

SECTION 8 COMPLETED UWMP CHECKLIST

IRWD has completed the following UWMP checklist to confirm that the required elements have been included in the UWMP. Page information on the checklist indicates where the required element can be found with the UWMP. This completed checklist will be submitted to DWR to support its review of the UWMP.

Table I-1 Urban Water Management Plan checklist, organized by legislation number

No.	UWMP requirement [a]	Calif. Water Code reference	Subject [b]	Additional clarification	UWMP location
1	Provide baseline daily per capita water use, urban water use target, interim urban water use target, and compliance daily per capita water use, along with the bases for determining those estimates, including references to supporting data.	10608.20(e)	System Demands		Pages 15-17
2	*Wholesalers:* Include an assessment of present and proposed future measures, programs, and policies to help achieve the water use reductions. *Retailers:* Conduct at least one public hearing that includes general discussion of the urban retail water supplier's implementation plan for complying with the Water Conservation Bill of 2009.	10608.36 10608.26(a)	System Demands	Retailer and wholesalers have slightly different requirements	Pages 4, 20
3	Report progress in meeting urban water use targets using the standardized form.	10608.40	Not applicable	Standardized form not yet available	Not Applicable
4	Each urban water supplier shall coordinate the preparation of its plan with other appropriate agencies in the area, including other water suppliers that share a common source, water management agencies, and relevant public agencies, to the extent practicable.	10620(d)(2)	Plan Preparation		Pages 1-2
5	An urban water supplier shall describe in the plan water management tools and options used by that entity that will maximize resources and minimize the need to import water from other regions.	10620(f)	Water Supply Reliability . . .		Page 42
6	Every urban water supplier required to prepare a plan pursuant to this part shall, at least 60 days prior to the public hearing on the plan required by Section 10642, notify any city or county within which the supplier provides water supplies that the urban water supplier will be reviewing the plan and considering amendments or changes to the plan. The urban water supplier may consult with, and obtain comments from, any city or county that receives notice pursuant to this subdivision.	10621(b)	Plan Preparation		Page 3
7	The amendments to, or changes in, the plan shall be adopted and filed in the manner set forth in Article 3 (commencing with Section 10640).	10621(c)	Plan Preparation		Not Applicable

No.	UWMP requirement [a]	Calif. Water Code reference	Subject [b]	Additional clarification	UWMP location
8	Describe the service area of the supplier	10631(a)	System Description		Pages 5-8
9	(Describe the service area) climate	10631(a)	System Description		Page 6
10	(Describe the service area) current and projected population . . . The projected population estimates shall be based upon data from the state, regional, or local service agency population projections within the service area of the urban water supplier . . .	10631(a)	System Description	Provide the most recent population data possible. Use the method described in "Baseline Daily Per Capita Water Use." See Section M.	Page 6
11	. . . (population projections) shall be in five-year increments to 20 years or as far as data is available.	10631(a)	System Description	2035 and 2040 can also be provided to support consistency with Water Supply Assessments and Written Verification of Water Supply documents.	Page 6
12	Describe . . . other demographic factors affecting the supplier's water management planning	10631(a)	System Description		Pages 6-8
13	Identify and quantify, to the extent practicable, the existing and planned sources of water available to the supplier over the same five-year increments described in subdivision (a).	10631(b)	System Supplies	The 'existing' water sources should be for the same year as the "current population" in line 10. 2035 and 2040 can also be provided to support consistency with Water Supply Assessments and Written Verification of Water Supply documents.	Pages 21-23, and 40-41
14	(Is) groundwater . . . identified as an existing or planned source of water available to the supplier . . .?	10631(b)	System Supplies	Source classifications are: surface water, groundwater, recycled water, storm water, desalinated sea water, desalinated brackish groundwater, and other.	Pages 23-28 And 40-41

No.	UWMP requirement [a]	Calif. Water Code reference	Subject [b]	Additional clarification	UWMP location
15	(Provide a) copy of any groundwater management plan adopted by the urban water supplier, including plans adopted pursuant to Part 2.75 (commencing with Section 10750), or any other specific authorization for groundwater management. Indicate whether a groundwater management plan been adopted by the water supplier or if there is any other specific authorization for groundwater management. Include a copy of the plan or authorization.	10631(b)(1)	System Supplies		Page 24 (not applicable)
16	(Provide a) description of any groundwater basin or basins from which the urban water supplier pumps groundwater.	10631(b)(2)	System Supplies		Pages 23-28
17	For those basins for which a court or the board has adjudicated the rights to pump groundwater, (provide) a copy of the order or decree adopted by the court or the board	10631(b)(2)	System Supplies		Not Applicable
18	(Provide) a description of the amount of groundwater the urban water supplier has the legal right to pump under the order or decree.	10631(b)(2)	System Supplies		Pages 23-28
19	For basins that have not been adjudicated, (provide) information as to whether the department has identified the basin or basins as overdrafted or has projected that the basin will become overdrafted if present management conditions continue, in the most current official departmental bulletin that characterizes the condition of the groundwater basin, and a detailed description of the efforts being undertaken by the urban water supplier to eliminate the long-term overdraft condition.	10631(b)(2)	System Supplies		Pages 26-27
20	(Provide a) detailed description and analysis of the location, amount, and sufficiency of groundwater pumped by the urban water supplier for the past five years. The description and analysis shall be based on information that is reasonably available, including, but not limited to, historic use records.	10631(b)(3)	System Supplies		Page 27
21	(Provide a) detailed description and analysis of the amount and location of groundwater that is projected to be pumped by the urban water supplier. The description and analysis shall be based on information that is reasonably available, including, but not limited to, historic use records.	10631(b)(4)	System Supplies	Provide projections for 2015, 2020, 2025, and 2030.	Pages 27-28

No.	UWMP requirement [a]	Calif. Water Code reference	Subject [b]	Additional clarification	UWMP location
22	Describe the reliability of the water supply and vulnerability to seasonal or climatic shortage, to the extent practicable, and provide data for each of the following: (A) An average water year, (B) A single dry water year, (C) Multiple dry water years.	10631(c)(1)	Water Supply Reliability . . .		Pages 53-56
23	For any water source that may not be available at a consistent level of use - given specific legal, environmental, water quality, or climatic factors - describe plans to supplement or replace that source with alternative sources or water demand management measures, to the extent practicable.	10631(c)(2)	Water Supply Reliability . . .		Pages 56-57
24	Describe the opportunities for exchanges or transfers of water on a short-term or long-term basis.	10631(d)	System Supplies		Pages 29-30
25	Quantify, to the extent records are available, past and current water use, and projected water use (over the same five-year increments described in subdivision (a)), identifying the uses among water use sectors, including, but not necessarily limited to, all of the following uses: (A) Single-family residential; (B) Multifamily; (C) Commercial; (D) Industrial; (E) Institutional and governmental; (F) Landscape; (G) Sales to other agencies; (H) Saline water intrusion barriers, groundwater recharge, or conjunctive use, or any combination thereof;(I) Agricultural.	10631(e)(1)	System Demands	Consider "past" to be 2005, present to be 2010, and projected to be 2015, 2020, 2025, and 2030. Provide numbers for each category for each of these years.	Pages 9-13

No.	UWMP requirement [a]	Calif. Water Code reference	Subject [b]	Additional clarification	UWMP location
26	(Describe and provide a schedule of implementation for) each water demand management measure that is currently being implemented, or scheduled for implementation, including the steps necessary to implement any proposed measures, including, but not limited to, all of the following: (A) Water survey programs for single-family residential and multifamily residential customers; (B) Residential plumbing retrofit; (C) System water audits, leak detection, and repair; (D) Metering with commodity rates for all new connections and retrofit of existing connections; (E) Large landscape conservation programs and incentives; (F) High-efficiency washing machine rebate programs; (G) Public information programs; (H) School education programs; (I) Conservation programs for commercial, industrial, and institutional accounts; (J) Wholesale agency programs; (K) Conservation pricing; (L) Water conservation coordinator; (M) Water waste prohibition;(N) Residential ultra-low-flush toilet replacement programs.	10631(f)(1)	DMMs	Discuss each DMM, even if it is not currently or planned for implementation. Provide any appropriate schedules.	Pages 62-69
27	A description of the methods, if any, that the supplier will use to evaluate the effectiveness of water demand management measures implemented or described under the plan.	10631(f)(3)	DMMs		Pages 62-69
28	An estimate, if available, of existing conservation savings on water use within the supplier's service area, and the effect of the savings on the supplier's ability to further reduce demand.	10631(f)(4)	DMMs		Pages 62-69

No.	UWMP requirement [a]	Calif. Water Code reference	Subject [b]	Additional clarification	UWMP location
29	An evaluation of each water demand management measure listed in paragraph (1) of subdivision (f) that is not currently being implemented or scheduled for implementation. In the course of the evaluation, first consideration shall be given to water demand management measures, or combination of measures, that offer lower incremental costs than expanded or additional water supplies. This evaluation shall do all of the following: (1) Take into account economic and noneconomic factors, including environmental, social, health, customer impact, and technological factors; (2) Include a cost-benefit analysis, identifying total benefits and total costs; (3) Include a description of funding available to implement any planned water supply project that would provide water at a higher unit cost; (4) Include a description of the water supplier's legal authority to implement the measure and efforts to work with other relevant agencies to ensure the implementation of the measure and to share the cost of implementation.	10631(g)	DMMs	See 10631(g) for additional wording.	Pages 62-69
30	(Describe) all water supply projects and water supply programs that may be undertaken by the urban water supplier to meet the total projected water use as established pursuant to subdivision (a) of Section 10635. The urban water supplier shall include a detailed description of expected future projects and programs, other than the demand management programs identified pursuant to paragraph (1) of subdivision (f), that the urban water supplier may implement to increase the amount of the water supply available to the urban water supplier in average, single-dry, and multiple-dry water years. The description shall identify specific projects and include a description of the increase in water supply that is expected to be available from each project. The description shall include an estimate with regard to the implementation timeline for each project or program.	10631(h)	System Supplies		Pages 40-41
31	Describe the opportunities for development of desalinated water, including, but not limited to, ocean water, brackish water, and groundwater, as a long-term supply.	10631(i)	System Supplies		Page 31

No.	UWMP requirement [a]	Calif. Water Code reference	Subject [b]	Additional clarification	UWMP location
32	Include the annual reports submitted to meet the Section 6.2 requirement (of the MOU), if a member of the CUWCC and signer of the December 10, 2008 MOU.	10631(j)	DMMs	Signers of the MOU that submit the annual reports are deemed compliant with Items 28 and 29.	Appendix F
33	Urban water suppliers that rely upon a wholesale agency for a source of water shall provide the wholesale agency with water use projections from that agency for that source of water in five-year increments to 20 years or as far as data is available. The wholesale agency shall provide information to the urban water supplier for inclusion in the urban water supplier's plan that identifies and quantifies, to the extent practicable, the existing and planned sources of water as required by subdivision (b), available from the wholesale agency to the urban water supplier over the same five-year increments, and during various water-year types in accordance with subdivision (c). An urban water supplier may rely upon water supply information provided by the wholesale agency in fulfilling the plan informational requirements of subdivisions (b) and (c).	10631(k)	System Demands	Average year, single dry year, multiple dry years for 2015, 2020, 2025, and 2030.	Page 14
34	The water use projections required by Section 10631 shall include projected water use for single-family and multifamily residential housing needed for lower income households, as defined in Section 50079.5 of the Health and Safety Code, as identified in the housing element of any city, county, or city and county in the service area of the supplier.	10631.1(a)	System Demands		Page12
35	Stages of action to be undertaken by the urban water supplier in response to water supply shortages, including up to a 50 percent reduction in water supply, and an outline of specific water supply conditions which are applicable to each stage.	10632(a)	Water Supply Reliability . . .		Pages 43-52 Appendix E
36	Provide an estimate of the minimum water supply available during each of the next three water years based on the driest three-year historic sequence for the agency's water supply.	10632(b)	Water Supply Reliability . . .		Pages 57-58
37	(Identify) actions to be undertaken by the urban water supplier to prepare for, and implement during, a catastrophic interruption of water supplies including, but not limited to, a regional power outage, an earthquake, or other disaster.	10632(c)	Water Supply Reliability . . .		Pages 44-46

No.	UWMP requirement [a]	Calif. Water Code reference	Subject [b]	Additional clarification	UWMP location
38	(Identify) additional, mandatory prohibitions against specific water use practices during water shortages, including, but not limited to, prohibiting the use of potable water for street cleaning.	10632(d)	Water Supply Reliability . . .		Pages 46-51
39	(Specify) consumption reduction methods in the most restrictive stages. Each urban water supplier may use any type of consumption reduction methods in its water shortage contingency analysis that would reduce water use, are appropriate for its area, and have the ability to achieve a water use reduction consistent with up to a 50 percent reduction in water supply.	10632(e)	Water Supply Reliability . . .		Pages 47-51
40	(Indicated) penalties or charges for excessive use, where applicable.	10632(f)	Water Supply Reliability . . .		Page 49
41	An analysis of the impacts of each of the actions and conditions described in subdivisions (a) to (f), inclusive, on the revenues and expenditures of the urban water supplier, and proposed measures to overcome those impacts, such as the development of reserves and rate adjustments.	10632(g)	Water Supply Reliability . . .		Pages 49-51
42	(Provide) a draft water shortage contingency resolution or ordinance.	10632(h)	Water Supply Reliability . . .		Page 51 Appendix E
43	(Indicate) a mechanism for determining actual reductions in water use pursuant to the urban water shortage contingency analysis.	10632(i)	Water Supply Reliability . . .		Pages 47-51 Appendix E
44	Provide, to the extent available, information on recycled water and its potential for use as a water source in the service area of the urban water supplier. The preparation of the plan shall be coordinated with local water, wastewater, groundwater, and planning agencies that operate within the supplier's service area	10633	System Supplies		Pages 32-39
45	(Describe) the wastewater collection and treatment systems in the supplier's service area, including a quantification of the amount of wastewater collected and treated and the methods of wastewater disposal.	10633(a)	System Supplies		Pages 33-35
46	(Describe) the quantity of treated wastewater that meets recycled water standards, is being discharged, and is otherwise available for use in a recycled water project.	10633(b)	System Supplies		Pages 33-35

No.	UWMP requirement [a]	Calif. Water Code reference	Subject [b]	Additional clarification	UWMP location
47	(Describe) the recycled water currently being used in the supplier's service area, including, but not limited to, the type, place, and quantity of use.	10633(c)	System Supplies		Pages 33-39
48	(Describe and quantify) the potential uses of recycled water, including, but not limited to, agricultural irrigation, landscape irrigation, wildlife habitat enhancement, wetlands, industrial reuse, groundwater recharge, indirect potable reuse, and other appropriate uses, and a determination with regard to the technical and economic feasibility of serving those uses.	10633(d)	System Supplies		Pages 35-39
49	(Describe) The projected use of recycled water within the supplier's service area at the end of 5, 10, 15, and 20 years, and a description of the actual use of recycled water in comparison to uses previously projected pursuant to this subdivision.	10633(e)	System Supplies		Pages 37-38
50	(Describe the) actions, including financial incentives, which may be taken to encourage the use of recycled water, and the projected results of these actions in terms of acre-feet of recycled water used per year.	10633(f)	System Supplies		Pages 38-39
51	(Provide a) plan for optimizing the use of recycled water in the supplier's service area, including actions to facilitate the installation of dual distribution systems, to promote recirculating uses, to facilitate the increased use of treated wastewater that meets recycled water standards, and to overcome any obstacles to achieving that increased use.	10633(g)	System Supplies		Pages 38-39
52	The plan shall include information, to the extent practicable, relating to the quality of existing sources of water available to the supplier over the same five-year increments as described in subdivision (a) of Section 10631, and the manner in which water quality affects water management strategies and supply reliability.	10634	Water Supply Reliability . . .	For years 2010, 2015, 2020, 2025, and 2030	Pages 51-52

No.	UWMP requirement [a]	Calif. Water Code reference	Subject [b]	Additional clarification	UWMP location
53	Every urban water supplier shall include, as part of its urban water management plan, an assessment of the reliability of its water service to its customers during normal, dry, and multiple dry water years. This water supply and demand assessment shall compare the total water supply sources available to the water supplier with the total projected water use over the next 20 years, in five-year increments, for a normal water year, a single dry water year, and multiple dry water years. The water service reliability assessment shall be based upon the information compiled pursuant to Section 10631, including available data from state, regional, or local agency population projections within the service area of the urban water supplier.	10635(a)	Water Supply Reliability . . .		Pages 53-61
54	The urban water supplier shall provide that portion of its urban water management plan prepared pursuant to this article to any city or county within which it provides water supplies no later than 60 days after the submission of its urban water management plan.	10635(b)	Plan Preparation		Pages 3-4 Appendix C
55	Each urban water supplier shall encourage the active involvement of diverse social, cultural, and economic elements of the population within the service area prior to and during the preparation of the plan.	10642	Plan Preparation		Pages 3-4 Appendix C
56	Prior to adopting a plan, the urban water supplier shall make the plan available for public inspection and shall hold a public hearing thereon. Prior to the hearing, notice of the time and place of hearing shall be published within the jurisdiction of the publicly owned water supplier pursuant to Section 6066 of the Government Code. The urban water supplier shall provide notice of the time and place of hearing to any city or county within which the supplier provides water supplies. A privately owned water supplier shall provide an equivalent notice within its service area.	10642	Plan Preparation		Pages 3-4
57	After the hearing, the plan shall be adopted as prepared or as modified after the hearing.	10642	Plan Preparation		Pages 3-4 Appendix B
58	An urban water supplier shall implement its plan adopted pursuant to this chapter in accordance with the schedule set forth in its plan.	10643	Plan Preparation		Pages 3-4

No.	UWMP requirement [a]	Calif. Water Code reference	Subject [b]	Additional clarification	UWMP location
59	An urban water supplier shall submit to the department, the California State Library, and any city or county within which the supplier provides water supplies a copy of its plan no later than 30 days after adoption. Copies of amendments or changes to the plans shall be submitted to the department, the California State Library, and any city or county within which the supplier provides water supplies within 30 days after adoption.	10644(a)	Plan Preparation		Page 3
60	Not later than 30 days after filing a copy of its plan with the department, the urban water supplier and the department shall make the plan available for public review during normal business hours.	10645	Plan Preparation		Pages 3-4

a The UWMP Requirement descriptions are general summaries of what is provided in the legislation. Urban water suppliers should review the exact legislative wording prior to submitting its UWMP.

b The Subject classification is provided for clarification only. It is aligned with the organization presented in Part I of this guidebook. A water supplier is free to address the UWMP Requirement anywhere with its UWMP, but is urged to provide clarification to DWR to facilitate review.

APPENDIX A REFERENCE DOCUMENTS

IRVINE RANCH WATER DISTRICT
2010 URBAN WATER MANAGEMENT PLAN

REFERENCES

1) *Water Resources Master Plan*, Irvine Ranch Water District, March, 2002 (supplemented January, 2004)

2) *2005 Urban Water Management Plan*, Irvine Ranch Water District, November, 2005

3) *Integrated Water Resources Plan Update,* Metropolitan Water District of Southern California, July, 2004

4) *Master Plan Report*, Orange County Water District, April, 1999

5) *Groundwater Management Plan,* Orange County Water District, March, 2004

6) *Final Draft Long-Term Facilities Plan,* Orange County Water District, January 2006

7) *2008-2009 Engineer's Report on Groundwater Conditions, Water Supply and Basin Utilization in the Orange County Water District*, Orange County Water District

8) *Section 15 of the Rules and Regulations – Water Conservation and Water Supply Shortage Program,* Irvine Ranch Water District, February 2009

9) *Water Shortage Contingency Plan,* Irvine Ranch Water District, February 2009

10) *2010 Integrated Resources Plan Update,* Metropolitan Water District of Southern California, October 2010

11) *Regional Urban Water Management Plan*, Metropolitan Water District of Southern California, November 2010

12) *Draft Regional Urban Water Management Plan for the Municipal Water District of Orange County,* June 2011

APPENDIX B RESOLUTION No. 2011-19

THE IRVINE RANCH WATER DISTRICT
ADOPTING THE 2010 URBAN WATER MANAGEMENT PLAN UPDATE

RESOLUTION NO. 2011 - 19

IRVINE RANCH WATER DISTRICT
RESCINDING RESOLUTION NO. 2005-46 AND ADOPTING
THE 2010 URBAN WATER MANAGEMENT PLAN
FOR SAID DISTRICT

WHEREAS, Irvine Ranch Water District is a California Water District organized and existing under the California Water District Law; and

WHEREAS, pursuant to Section 10620 et seq. of the California Water Code the District prepared and adopted an Urban Water Management Plan for said District on November 28, 2005; and

WHEREAS, the Board of Directors of the District, pursuant to Section 10621 of the Water Code has reviewed the Plan and directed that it be amended; and

WHEREAS, the amended Plan, entitled "2010 Urban Water Management Plan" has been made available for public inspection and notice of a public hearing thereon has been given pursuant to Section 6066 of the California Government Code; and

WHEREAS, at the time set, the duly noticed public hearing was held and all persons interested were given an opportunity to be heard concerning any matter set forth in the Plan.

NOW, THEREFORE, the Board of Directors of the Irvine Ranch Water District does hereby RESOLVE, DETERMINE and ORDER as follows:

Section 1. Resolution No. 2005-46 adopted the 28th day of November 2005 be and hereby is rescinded in its entirety.

Section 2. The 2010 Urban Water Management Plan of the Irvine Ranch Water District, dated June 2011, is hereby adopted pursuant to Section 10642 of the California Water Code.

Section 3. The Secretary is directed to file a copy of the 2010 Urban Water Management Plan of the Irvine Ranch Water District with the Department of Water Resources of the State of California, pursuant to Section 10644 of the California Water Code.

ADOPTED, SIGNED and APPROVED this 13th day of June, 2011.

President, IRVINE RANCH WATER DISTRICT
and of the Board of Directors thereof

Leslie Bonkowski

Secretary, IRVINE RANCH WATER DISTRICT
and of the Board of Directors thereof

APPROVED AS TO FORM:
BOWIE, ARNESON, WILES & GIANNONE
Legal Counsel - IRWD

By: _____

STATE OF CALIFORNIA)
) SS.
COUNTY OF ORANGE)

I, Nancy Savedra, Assistant Secretary of the Board of Directors of Irvine Ranch Water District, do hereby certify that the foregoing Resolution was duly adopted by the Board of Directors of said District at a regular board meeting of said Board held on the 13th day of June 2011, and that it was so adopted by the following vote:

AYES:	DIRECTORS	Matheis, Reinhart Swan and Withers
NOES:	DIRECTORS	None
ABSTAIN:	DIRECTORS	None
ABSENT:	DIRECTORS	LaMar

(SEAL)

Nancy Savedra

Assistant Secretary of IRVINE RANCH WATER DISTRICT
and of the Board of Directors thereof

STATE OF CALIFORNIA)
) SS.
COUNTY OF ORANGE)

I, ~~Nancy Savedra, Assistant~~ Leslie Bonkowski Secretary of the Board of Directors of Irvine Ranch Water District, do hereby certify that the above and foregoing is a full, true and correct copy of Resolution No. 2011-19 of said Board, and that the same has not been amended or repealed.

Dated: June 15, 2011 Leslie Bonkowski

~~Assistant~~ Secretary of IRVINE RANCH WATER DISTRICT
and of the Board of Directors thereof

(SEAL)

APPENDIX C LETTERS TO CITIES AND COUNTY WITHIN IRWD SERVICE AREA

IRVINE RANCH WATER DISTRICT 2010 URBAN WATER MANAGEMENT PLAN

IRVINE RANCH WATER DISTRICT 15600 Sand Canyon Ave., P.O. Box 57000, Irvine, CA 92619-7000 (949) 453-5300

February 3, 2011

Mr. Joe DeFrancesco, Public Works Director
City of Orange
P. O. Box 449
Orange, CA 92866

Dear Mr. DeFrancesco:

As you may be aware, pursuant to the California Water Code, Irvine Ranch Water District (IRWD) updates its Urban Water Management Plan every five years in years ending in "0" and "5". This effort helps ensure we can provide our service area including the City of Orange with a reliable supply of high-quality water to meet current and future demand.

Because comprehensive water resource planning is so critical, the California Water Code mandates all urban water purveyors notify the city or county they serve of this planning effort and solicit any comments in updating the Urban Water Management Plan. Comments may include information on land-use planning decisions in your city that may impact water consumption over the next 20 years.

IRWD's 2010 Urban Water Management Plan, which is due by July 1, 2011, is also being coordinated with the Municipal Water District of Orange County (MWDOC) for inclusion in its Regional Urban Water Management Plan. Metropolitan Water District of Southern California (MWD) supplies imported water from Northern California and the Colorado River to nearly 18 million people in six Southern California counties. MWDOC, a MWD member agency, is the water wholesaler and resource-planning agency for Orange County. The result of these collaborative efforts will be an all-inclusive plan that will assist in better managing one of California's most precious resources.

You may contact Kellie Welch at (949) 453-5604 if you should have any comments or questions on IRWD's Urban Water Management Plan.

Sincerely,

Gregory P. Heiertz
Director of Water Resources and Environmental Quality

IRVINE RANCH WATER DISTRICT 15600 Sand Canyon Ave., P.O. Box 57000, Irvine, CA 92619-7000 (949) 453-5300

February 3, 2011

Mr. Jess Carbajal
O.C. Public Works Director
County of Orange
300 N. Flower Street
Santa Ana, CA 92703-5000

Dear Mr. Carbajal:

As you may be aware, pursuant to the California Water Code, Irvine Ranch Water District (IRWD) updates its Urban Water Management Plan every five years in years ending in "0" and "5". This effort helps ensure we can provide our service area including the County of Orange with a reliable supply of high-quality water to meet current and future demand.

Because comprehensive water resource planning is so critical, the California Water Code mandates all urban water purveyors notify the city or county they serve of this planning effort and solicit any comments in updating the Urban Water Management Plan. Comments may include information on land-use planning decisions in your county that may impact water consumption over the next 20 years.

IRWD's 2010 Urban Water Management Plan, which is due by July 1, 2011, is also being coordinated with the Municipal Water District of Orange County (MWDOC) for inclusion in its Regional Urban Water Management Plan. Metropolitan Water District of Southern California (MWD) supplies imported water from Northern California and the Colorado River to nearly 18 million people in six Southern California counties. MWDOC, a MWD member agency, is the water wholesaler and resource-planning agency for Orange County. The result of these collaborative efforts will be an all-inclusive plan that will assist in better managing one of California's most precious resources.

You may contact Kellie Welch at (949) 453-5604 if you should have any comments or questions on IRWD's Urban Water Management Plan.

Sincerely,

Gregory P. Heiertz
Director of Water Resources and Environmental Quality

IRVINE RANCH WATER DISTRICT 15600 Sand Canyon Ave., P.O. Box 57000, Irvine, CA 92619-7000 (949) 453-5300

February 3, 2011

Mr. Peter Naghavi, Public Services Director
City of Costa Mesa
P. O. Box 1200
Costa Mesa, CA 92628-1200

Dear Mr. Naghavi:

As you may be aware, pursuant to the California Water Code, Irvine Ranch Water District (IRWD) updates its Urban Water Management Plan every five years in years ending in "0" and "5". This effort helps ensure we can provide our service area including the City of Costa Mesa with a reliable supply of high-quality water to meet current and future demand.

Because comprehensive water resource planning is so critical, the California Water Code mandates all urban water purveyors notify the city or county they serve of this planning effort and solicit any comments in updating the Urban Water Management Plan. Comments may include information on land-use planning decisions in your city that may impact water consumption over the next 20 years.

IRWD's 2010 Urban Water Management Plan, which is due by July 1, 2011, is also being coordinated with the Municipal Water District of Orange County (MWDOC) for inclusion in its Regional Urban Water Management Plan. Metropolitan Water District of Southern California (MWD) supplies imported water from Northern California and the Colorado River to nearly 18 million people in six Southern California counties. MWDOC, a MWD member agency, is the water wholesaler and resource-planning agency for Orange County. The result of these collaborative efforts will be an all-inclusive plan that will assist in better managing one of California's most precious resources.

You may contact Kellie Welch at (949) 453-5604 if you should have any comments or questions on IRWD's Urban Water Management Plan.

Sincerely,

Gregory P. Heiertz
Director of Water Resources and Environmental Quality

IRVINE RANCH WATER DISTRICT 15600 Sand Canyon Ave., P.O. Box 57000, Irvine, CA 92619-7000 (949) 453-5300

February 3, 2011

Mr. Manuel Gomez, Director of Public Works
City of Irvine
P. O. Box 19575
Irvine, CA 92623-9575

Dear Mr. Gomez:

As you may be aware, pursuant to the California Water Code, Irvine Ranch Water District (IRWD) updates its Urban Water Management Plan every five years in years ending in "0" and "5". This effort helps ensure we can provide our service area including the City of Irvine with a reliable supply of high-quality water to meet current and future demand.

Because comprehensive water resource planning is so critical, the California Water Code mandates all urban water purveyors notify the city or county they serve of this planning effort and solicit any comments in updating the Urban Water Management Plan. Comments may include information on land-use planning decisions in your city that may impact water consumption over the next 20 years.

IRWD's 2010 Urban Water Management Plan, which is due by July 1, 2011, is also being coordinated with the Municipal Water District of Orange County (MWDOC) for inclusion in its Regional Urban Water Management Plan. Metropolitan Water District of Southern California (MWD) supplies imported water from Northern California and the Colorado River to nearly 18 million people in six Southern California counties. MWDOC, a MWD member agency, is the water wholesaler and resource-planning agency for Orange County. The result of these collaborative efforts will be an all-inclusive plan that will assist in better managing one of California's most precious resources.

You may contact Kellie Welch at (949) 453-5604 if you should have any comments or questions on IRWD's Urban Water Management Plan.

Sincerely,

Gregory P. Heiertz
Director of Water Resources and Environmental Quality

IRVINE RANCH WATER DISTRICT 15600 Sand Canyon Ave., P.O. Box 57000, Irvine, CA 92619-7000 (949) 453-5300

February 3, 2011

Mr. Robert Woodings, Director of Public Works
City of Lake Forest
25550 Commercentre Drive
Lake Forest, CA 92630

Dear Mr. Woodings:

As you may be aware, pursuant to the California Water Code, Irvine Ranch Water District (IRWD) updates its Urban Water Management Plan every five years in years ending in "0" and "5". This effort helps ensure we can provide our service area including the City of Lake Forest with a reliable supply of high-quality water to meet current and future demand.

Because comprehensive water resource planning is so critical, the California Water Code mandates all urban water purveyors notify the city or county they serve of this planning effort and solicit any comments in updating the Urban Water Management Plan. Comments may include information on land-use planning decisions in your city that may impact water consumption over the next 20 years.

IRWD's 2010 Urban Water Management Plan, which is due by July 1, 2011, is also being coordinated with the Municipal Water District of Orange County (MWDOC) for inclusion in its Regional Urban Water Management Plan. Metropolitan Water District of Southern California (MWD) supplies imported water from Northern California and the Colorado River to nearly 18 million people in six Southern California counties. MWDOC, a MWD member agency, is the water wholesaler and resource-planning agency for Orange County. The result of these collaborative efforts will be an all-inclusive plan that will assist in better managing one of California's most precious resources.

You may contact Kellie Welch at (949) 453-5604 if you should have any comments or questions on IRWD's Urban Water Management Plan.

Sincerely,

Gregory P. Heiertz
Director of Water Resources and Environmental Quality

IRVINE RANCH WATER DISTRICT 15600 Sand Canyon Ave., P.O. Box 57000, Irvine, CA 92619-7000 (949) 453-5300

February 3, 2011

Mr. Stephen Badum, Public Work Director
City of Newport Beach
P. O. Box 1768
Newport Beach, CA 92658-8915

Dear Mr. Badum:

As you may be aware, pursuant to the California Water Code, Irvine Ranch Water District (IRWD) updates its Urban Water Management Plan every five years in years ending in "0" and "5". This effort helps ensure we can provide our service area including the City of Newport Beach with a reliable supply of high-quality water to meet current and future demand.

Because comprehensive water resource planning is so critical, the California Water Code mandates all urban water purveyors notify the city or county they serve of this planning effort and solicit any comments in updating the Urban Water Management Plan. Comments may include information on land-use planning decisions in your city that may impact water consumption over the next 20 years.

IRWD's 2010 Urban Water Management Plan, which is due by July 1, 2011, is also being coordinated with the Municipal Water District of Orange County (MWDOC) for inclusion in its Regional Urban Water Management Plan. Metropolitan Water District of Southern California (MWD) supplies imported water from Northern California and the Colorado River to nearly 18 million people in six Southern California counties. MWDOC, a MWD member agency, is the water wholesaler and resource-planning agency for Orange County. The result of these collaborative efforts will be an all-inclusive plan that will assist in better managing one of California's most precious resources.

You may contact Kellie Welch at (949) 453-5604 if you should have any comments or questions on IRWD's Urban Water Management Plan.

Sincerely,

Gregory P. Heiertz
Director of Water Resources and Environmental Quality

IRVINE RANCH WATER DISTRICT 15600 Sand Canyon Ave., P.O. Box 57000, Irvine, CA 92619-7000 (949) 453-5300

February 3, 2011

Mr. Doug Stack, Director of Public Works
City of Tustin
300 Centennial Way
Tustin, CA 92780

Dear Mr. Stack:

As you may be aware, pursuant to the California Water Code, Irvine Ranch Water District (IRWD) updates its Urban Water Management Plan every five years in years ending in "0" and "5". This effort helps ensure we can provide our service area including the City of Tustin with a reliable supply of high-quality water to meet current and future demand.

Because comprehensive water resource planning is so critical, the California Water Code mandates all urban water purveyors notify the city or county they serve of this planning effort and solicit any comments in updating the Urban Water Management Plan. Comments may include information on land-use planning decisions in your city that may impact water consumption over the next 20 years.

IRWD's 2010 Urban Water Management Plan, which is due by July 1, 2011, is also being coordinated with the Municipal Water District of Orange County (MWDOC) for inclusion in its Regional Urban Water Management Plan. Metropolitan Water District of Southern California (MWD) supplies imported water from Northern California and the Colorado River to nearly 18 million people in six Southern California counties. MWDOC, a MWD member agency, is the water wholesaler and resource-planning agency for Orange County. The result of these collaborative efforts will be an all-inclusive plan that will assist in better managing one of California's most precious resources.

You may contact Kellie Welch at (949) 453-5604 if you should have any comments or questions on IRWD's Urban Water Management Plan.

Sincerely,

Gregory P. Heiertz
Director of Water Resources and Environmental Quality

APPENDIX D SBx7-7 GPCD CALCULATION

IRVINE RANCH WATER DISTRICT
2010 URBAN WATER MANAGEMENT PLAN

Law

> 10608.20(e). An urban retail water supplier shall include in its urban water management plan...due in 2010 the baseline daily per capita water use, urban water use target, interim urban water use target, and compliance daily per capita water use, along with the bases for determining those estimates, including references to supporting data.

Baselines and Targets

IRWD is required to calculate and report on its baseline per capita water use, 2020 water use target and interim target in order to comply with the Water Conservation Act of 2009. IRWD, as a retail agency has the option of complying individually or participating in a Regional Alliance. IRWD has chosen to participate in a Regional Alliance with the Municipal Water District of Orange County. The Regional Alliance calculation is based on the first option allowed, and provides maximum flexibility. Each individual agency calculates its own individual target, as if it were complying individually. The individual targets for each agency are then weighted by the supplier's population to develop a regional target. In the event that the region does not comply with the regional target, an agency may still be in compliance if it meets its own individual target. In both cases, the 2020 target is calculated using Method 1, which is eighty percent of the baseline per capita water use.

IRWD followed DWR's Methodologies for Calculating Baseline and Compliance Per Capita Water Use for developing its individual baseline and targets, and the approaches are described below. Details on the methodology used by the Municipal Water District of Orange County (MWDOC) to calculate the Regional Alliance Target are contained within MWDOC's Regional Urban Water Management Plan.

Baseline Period

IRWD's base period is a 15-year range, beginning in July 1, 1990 through June 30, 2005. IRWD is eligible to use a 15-year baseline since the volume of recycled water deliveries in 2008 was more than 10%. IRWD delivered 16,566.1 acre-feet of recycled water from total deliveries of 97,215.5 acre-feet in 2008, or 17% of total deliveries.

Service Area Population

IRWD serves all or portions of six cities, plus part of unincorporated Orange County. Population data was developed for IRWD by the Center for Demographic Research at California State University, Fullerton (CDR). CDR developed projections for non-census years using California State Department of Finance Data combined with GIS information. Population estimates were derived from 2000 census data, and will be updated in 2015 and 2020. Targets will be revised in those reporting years, based on the most accurate population data available. The population data for IRWD is based on IRWD's 2010 service area boundary. IRWD consolidated with three other agencies during the baseline period. The population for all of those areas was included for the entire baseline period for purposes of consistency.

APPENDIX D: SBx7-7 GPCD CALCULATIONS

Gross Water Use Calculation

IRWD's gross water use calculation was based on metered water supplied to its distribution system, with adjustments for recycled water use and water used for agricultural purposes. IRWD consolidated with several other agencies during the baseline period, and therefore combined water use data for the consolidated service area was used for the entire baseline period for purposes of consistency. All of IRWD's water use data is reported on a fiscal year basis (July 1 – June 30).

Compile Water Volumes

IRWD compiled water volumes from its own sources and imported water sources in accordance with the technical methodologies. Exports of non-recycled water to other agencies were calculated and deducted.

Change in Storage

IRWD has insignificant changes in storage, and therefore no adjustments were made for changes in distribution system storage.

Recycled Water and Agricultural Water Use

Recycled water was deducted from the calculation of gross water. Deliveries of other non-potable and potable water to agricultural customers were deducted.

Indirect Potable Reuse

SBx7-7 allows urban retail water suppliers to calculate a deduction for recycled water entering their distribution system indirectly through a groundwater source. Individual water suppliers within the OCWD Groundwater Basin, such as IRWD, have the option of choosing this deduction to account for the recharge of recycled water into the basin by OCWD historically through Water Factory 21, and more recently by the Ground Water Replenishment System. These deductions also benefit all members of the Orange County 20x2020 Regional Alliance.

The table below provides the calculation deducting recycled water for indirect potable reuse for OCWD Basin Agencies. Because year-to-year variations can occur in the amount of recycled water applied in a groundwater recharge operations, a previous five year average of recharge is used, as found in column (1). To account for losses during recharge and recovery, a factor of 96.5% was used in column (2)[1]. After accounting for these losses, the estimated volume of recycled water entering the distribution system is calculated in column (3).

[1] Figure based on in-basin losses to other groundwater basins, which averages 10,000 AF per year or 3.5% of average basin yield. The estimated FY 2090/10 basin losses of 9,315 acre-feet can be found in the *Fiscal Year 2009/10 Conjunctive Use Program (CUP) Account Activity and Losses.* Losses associated with treatment and recharge operations are negligible.

In column (4), the annual deduction for recycled water for indirect potable reuse is expressed as a percentage of the total volume of water extracted from the basin in that year. This is the annual percentage of total OCWD basin production that is eligible for a deduction. IRWD's annual deduction is calculated as the basin pumping in a given year multiplied by the value in column (4).

For example, if Agency A pumped 10,000 acre-feet of water from the OCWD Basin in Fiscal Year 2004/05, then 1.47% of that total production would be deducted from the agency's calculation of Gross Water Use for that year. This equates to a deduction of 147 acre-feet (AF).

Calculation of Annual Deductable Volume of Indirect Recycled Water Entering Distribution System

Fiscal Year Ending	(1) 5-Year Average Recharge (Acre-Feet)	(2) Loss Factor for Recharge & Recovery	(1) x (2) = (3) Volume Entering Distribution System (Acre-Feet)	(4) Percent of Total Basin Production
1990	6,498	96.7%	6,284	2.75%
1991	6,498	96.5%	6,271	2.65%
1992	6,566	96.5%	6,336	2.59%
1993	6,658	96.5%	6,425	2.62%
1994	7,034	96.5%	6,788	2.84%
1995	6,636	96.5%	6,403	2.32%
1996	5,884	96.5%	5,678	1.88%
1997	5,413	96.5%	5,224	1.68%
1998	4,922	96.5%	4,750	1.60%
1999	3,789	96.5%	3,657	1.13%
2000	3,479	96.5%	3,357	1.05%
2001	4,086	96.5%	3,943	1.22%
2002	3,643	96.5%	3,515	1.09%
2003	3,594	96.5%	3,468	1.26%
2004	3,868	96.5%	3,733	1.40%
2005	3,527	96.5%	3,404	1.47%
2006	3,203	96.5%	3,091	1.44%

Distribution System

IRWD's distribution system boundaries are defined by points at which water enters IRWD's distribution system. Those points include master meters for water imported from Metropolitan Water District of Southern California, master meters on IRWD wells for local groundwater, master meters for untreated water entering the distribution system from Irvine Lake, and meters on wells and treatment plants for other non-potable sources of supply, including recycled water.

IRWD Retail Water Supplier System Schematics

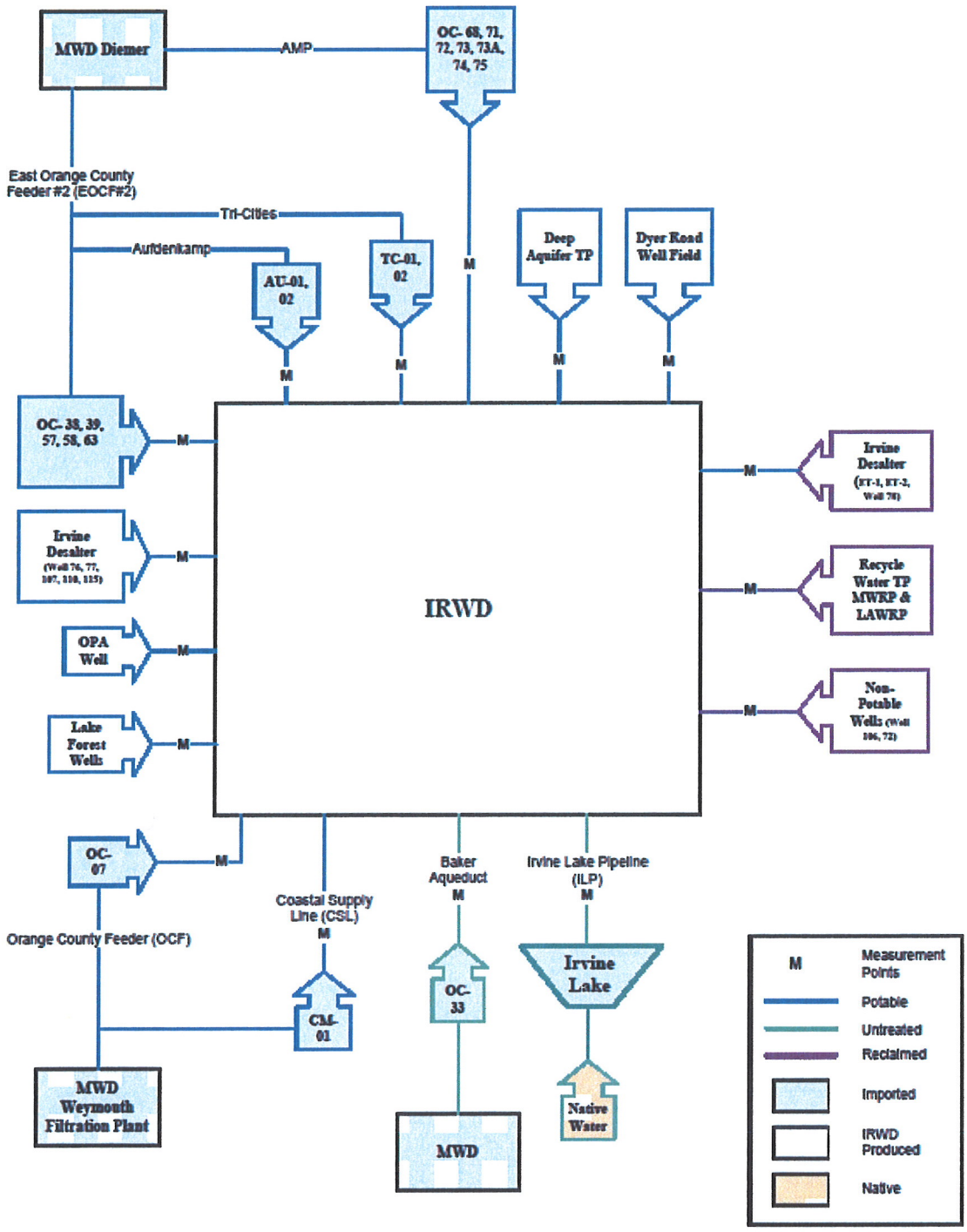

APPENDIX E RESOLUTION NO. 2009-5
WATER SHORTAGE CONTINGENCY PLAN

IRVINE RANCH WATER DISTRICT
2010 URBAN WATER MANAGEMENT PLAN

RESOLUTION NO. 2009- 5

RESOLUTION OF THE BOARD OF DIRECTORS OF
IRVINE RANCH WATER DISTRICT ADOPTING
AMENDED WATER SHORTAGE CONTINGENCY PLAN

WHEREAS, California law, as set forth in Government Code Section 10632, requires each urban water supplier's urban water management plan (UWMP) to provide a water shortage contingency analysis including specified elements; and

WHEREAS, Irvine Ranch Water District ("IRWD") initially adopted its Water Shortage Contingency Plan (the "Plan") in 1987, through the adoption of Resolution No. 1987-52 amending Section 15 – "Prohibition of Water Wastage" of IRWD's Rules and Regulations (as currently titled, "Rules and Regulations For Water, Sewer, and Recycled Water and Natural Treatment System Service" and referred to herein as the "Rules and Regulations"); and

WHEREAS, the Plan has been included as an appendix to IRWD's UWMP, and, along with certain information in the UWMP, provides the water shortage contingency analysis elements set forth in Government Code Section 10632; and

WHEREAS, the Plan has been updated periodically as part of the updating of IRWD's UWMP, with the most recent update occurring in December, 2005; and

WHEREAS, the Board of Directors has adopted an amended Section 15 of the Rules and Regulations, entitled "Water Conservation and Water Supply Shortage Program and Regulations" (the "Program and Regulations"), making certain modifications to Section 15 including modifications that reflect the complementary implementation of the Program and Regulations with IRWD's allocation based tiered water pricing structure (Section 12 of the Rules and Regulations) and the inclusion of water shortage response measures that would be implemented through adjustments to the pricing structure; and

WHEREAS, corresponding revisions have been prepared in the Plan, which serves as the resource and supporting document for the implementation of the Program and Regulations; and

WHEREAS, the Board of Directors has reviewed the revised Plan, as presented to this meeting.

NOW, THEREFORE, THE BOARD OF DIRECTORS OF IRVINE RANCH WATER DISTRICT DOES HEREBY RESOLVE, DETERMINE AND ORDER AS FOLLOWS:

Section 1. The amended Irvine Ranch Water District Water Shortage Contingency

Plan is hereby adopted.

Section 2. The amended Irvine Ranch Water District Water Shortage Contingency Plan shall serve as a supporting document as referenced in the Program and Regulations and in the UWMP.

ADOPTED, SIGNED and APPROVED this 9th day of February, 2009.

President, IRVINE RANCH WATER DISTRICT and of the Board of Directors thereof

Leslie Bonkowski

Secretary, IRVINE RANCH WATER DISTRICT and of the Board of Directors thereof

APPROVED AS TO FORM:
BOWIE, ARNESON, WILES & GIANNONE
IRWD Legal Counsel

013009

STATE OF CALIFORNIA)
) SS.
COUNTY OF ORANGE)

I, Nancy Savedra, Assistant Secretary of the Board of Directors of Irvine Ranch Water District, do hereby certify that the foregoing Resolution was duly adopted by the Board of Directors of said District at a regular board meeting of said Board held on the 9th day of February 2009, and that it was so adopted by the following vote:

AYES:	DIRECTORS	Matheis, Reinhart, Swan and Withers
NOES:	DIRECTORS	None
ABSTAIN:	DIRECTORS	None
ABSENT:	DIRECTORS	None

(SEAL)

Nancy Savedra

Assistant Secretary of IRVINE RANCH WATER DISTRICT
and of the Board of Directors thereof

STATE OF CALIFORNIA)
) SS.
COUNTY OF ORANGE)

I, Nancy Savedra, Assistant Secretary of the Board of Directors of Irvine Ranch Water District, do hereby certify that the above and foregoing is a full, true and correct copy of Resolution No. 2009-5 of said Board, and that the same has not been amended or repealed.

Dated: _____

_____
Assistant Secretary of IRVINE RANCH WATER DISTRICT
and of the Board of Directors thereof

(SEAL)

WATER SHORTAGE CONTINGENCY PLAN
February 2009

PART I: EXECUTIVE SUMMARY

Background

IRWD's response to a water supply shortage varies depending on the magnitude and nature of the shortfall. A supply shortage is defined as a reduction in total supplies, typically resulting from one of two conditions:

- Drought conditions that limit availability of imported water or local supplies.
- System interruptions that result from emergency outage conditions.

IRWD's response to any water supply shortage depends on the cause, severity and anticipated duration of the shortage. Use of local supplies, storage and other supply augmentation measures can mitigate shortages, and are assumed to be in use to the maximum extent possible during declared shortage levels. The resultant net shortage levels can be addressed by demand reduction programs, as described in this Plan. This document is intended primarily to address drought supply shortages, however at the discretion of the Board, this Plan may also be used to address system outages, although these are more explicitly addressed in IRWD's Water Supply Reliability Study (June 2008).

Supply Shortage Conditions

Given the assumption that the level of water supply shortage experienced at any point in time is net of mitigating supply factors, two basic considerations emerge in formulating a water shortage plan: (1) the shortage must be offset by demand reduction, and (2) the demand reduction program must be incremental in nature since shortage conditions are normally progressive. This means that a shortage contingency plan should be designed to address varying levels of supply deficits with recommended actions predicated upon the actual deficit level. Therefore this plan develops a shortage response based upon four levels of supply cutbacks:

- *Level One* is a shortage warning and low level shortage condition with supply reductions of up to 10%.
- *Level Two* is a significant shortage condition indicated by shortages between 10 to 25%.
- *Level Three* is a severe shortage condition indicated by shortages ranging from 25 to 40%.
- *Level Four* is a crisis shortage condition resulting when shortages exceed 40%.

Each shortage level will trigger a set of response measures aimed at reducing demand to the level of supply. Steps taken within each level should be considered cumulative; that is, Level Two responses will include most if not all the responses in Level One plus the additional actions necessary to meet the Level Two condition. Level Three will include most if not all the responses in Level Two plus the additional measures necessary to meet a Level Three condition, and so on.

However, if a shortage condition persisted over an extended period of time, it may be necessary to implement a higher level response to sustain required reductions. Thus both the severity of supply reductions and the duration over which the reductions are experienced will determine the appropriate response.

Supply Shortage Response Measures

In addition to basic measures which are always in effect, there are three types of response measures that can be implemented by the District in the event of a supply shortage.

- Voluntary measures through increased public outreach, education and awareness (V)
- Demand management through the use of the District's allocation-based rate structure (D).
- Mandatory measures through restrictions on use and enforcement (M).

In general terms, voluntary customer responses and demand management through the use of the allocation-based rate structure will be used in all four shortage levels identified in this plan. A combination of voluntary and demand management strategies are likely to be sufficient to address virtually all shortage levels. Responses to shortages in Levels Three and Four may also include restrictions on use and enforcement. Below is a summary of anticipated supply shortage response measures.

Supply Shortage Response Measure	IRWD Supply Shortage Level	Voluntary (V), Demand Management (D) or Mandatory (M)
Public Education	Always In Effect	
Prohibition of Gutter Flooding	Always In Effect	
Prohibition of Leaks	Always In Effect	
Prohibition of Water Waste	Always In Effect	
Enhanced Public Awareness Campaign	Level One	V
Target Over-Allocation Customers for Surveys/Assistance	Level One	V
Review and Adjust Customer Allocations and/or Tiers as necessary	Level One/Two	D
Reduce Potable and Untreated Irrigation and Agricultural Allocations by 30% or other percentage specified in the shortage level declaration	Level Two	D
Reduce Potable and Untreated Irrigation Allocations by 60% or other percentage specified in the shortage level declaration	Level Three	D
Reduce Commercial, Industrial and Institutional Potable Allocations by 10% or other percentage specified in the shortage level declaration	Level Three	D
Increase Rates for Over-Allocation Use Tiers	Level Three/Four	D
Further reduction of allocations, tightening of tiers and rate increases to achieve necessary demand reductions	Level Four	D/M
Eliminate Outdoor Use (100% reduction)	Level Four	D/M
Mandatory restrictions and enforcement	Level Four	M

These response measures may be applied singly or in combination and may vary according to the severity and duration of the shortage. Other measures may be applied in lieu of or in addition to those described in this plan. The application of shortage level response measures or restrictions may vary as to type of water service. In the implementation of measures or restrictions on potable water service through the declaration of a shortage level, the District will determine and set forth how and to what extent, if any, such measures or restrictions, or different measures or restrictions, will be applied to non-potable water services furnished by the District. IRWD's Board of Directors will declare the level of shortage based on water supply conditions.

Imported Water Supply Shortage

An imported water supply shortage represents one of the main causes of a supply shortage for the District. In 2008 approximately one-third of IRWD's water supply was imported through Metropolitan Water District of Southern California (MWD). While potential reductions in imported water deliveries from MWD can be mitigated to some extent by the addition of other local supplies, such as increased pumping from groundwater facilities, or the conversion of certain potable water uses to recycled water (see IRWD's Water Resources Master Plan (WRPM) and Urban Water Management Plan (UWMP)), the range of shortages projected herein is assumed to be net of those supply augmentation measures. That is, supply shortages identified as, say 20%, is the actual shortage confronted by the District's customers after supply augmentation factors have been implemented. This plan is intended to develop a set of options to reduce demand; the development of supply augmentation options is outside the scope of this analysis and is addressed in the WRMP and UWMP.

In February 2008 the MWD adopted a Water Supply Allocation Plan based on its declared level of shortage. IRWD has performed analysis relating to varying hydrologic conditions, availability of supply augmentation measures and additional conservation. Based on the results of the modeling, Table 1 illustrates IRWD water shortage levels correlated with MWD's allocation shortage plan.

Table 1: IRWD Water Shortage Levels Correlated with MWD Allocation Stages:

MWD Stage	MWD Supply Shortage	IRWD Reliability Range	IRWD Shortage Level
1	5%	97-100%	1
2	10%	95-100%	1
3	15%	93-100%	1
4	20%	91-100%	1
5	25%	88-99%	1 or 2
6	30%	86-97%	2
7	35%	84-95%	2
8	40%	82-92%	2
9	45%	79-89%	2
10	50%	77-88%	2 or 3

The above table assumes a dry local hydrology for multiple years and limited access to groundwater. Actual correlations may differ depending on local hydrology at the time of the shortage.

PART II: SHORTAGE RESPONSE STRATEGIES

Basic Measures Always In Effect

The following basic measures are considered good water management practices, and are always in effect regardless of whether a shortage level is declared. These measures are contained in IRWD's Rules and Regulations (Section 15):

(a) *Gutter Flooding* - No person shall cause or permit any water furnished to any property within the District to run or to escape from any hose, pipe, valve, faucet, sprinkler, or irrigation device into any gutter or otherwise to escape from the property if such running or escaping can reasonably be prevented.

(b) *Leaks* - No person shall permit leaks of water that he has the authority to eliminate.

(c) *Washing Hard Surface Areas* - Washing down hard or paved surfaces, including, but not limited to sidewalks, walkways, driveways, parking areas, tennis courts, patios or alleys, is prohibited except when necessary to alleviate safety or sanitary hazards.

(d) *Waste* - No person shall cause or permit water under his control to be wasted. Wasteful usage includes, but is not limited to, the uses listed in Section 13(a) of Exhibit 1 to the Memorandum of Understanding Regarding Urban Water Conservation in California, dated December 11, 2002, as amended from time to time, or the counterpart of said list contained in any successor document.

Under the District's allocation-based conservation rate structure that is in effect during non-shortage conditions, customer allocations are limited to the amount that is reasonable for the customer's needs and property characteristics, and reflect the exclusion of these types of wasteful water uses.

Water Supply Shortage Response Measures

IRWD would employ a range of measures in response to potential shortages depending on the level and duration. While the measures will be applied incrementally, this Plan builds in a level of flexibility to adopt additional measures to ensure the appropriate level of demand reduction. The use of IRWD's allocation-based rates and the assessment of higher rates for over-allocation or wasteful use provides IRWD with an additional strategy to help achieve demand reductions.

For illustration purposes, Table 2 shows water reductions requirements that would be required during three shortage conditions, using water demand data from 2007 (See Appendix A for total treated and untreated water demands).

Table 2: Water Conservation Requirements – Acre-Feet:

Shortage Percentage	**10%**	**25%**	**40%**
Treated and Untreated Water	6,673	16,683	26,693
Treated Water Only	5,874	14,686	23,497

In order to achieve the necessary demand reductions, IRWD's measures will progress from voluntary reductions to reduction of discretionary uses through financial incentives or restrictions to reduction of non-discretionary uses through financial incentives or restrictions based on the level of the shortage. Most shortages, unless extreme (Level Four or system outage), can be addressed with a combination of voluntary measures and a reduction of discretionary uses through financial incentives.

Response Measures: Voluntary

The single most important step the District can take in implementing voluntary measures is to inform the public consciousness in order to help reduce water demand. It should be noted that the District has implemented on-going water use efficiency and outreach programs since the early 1990's, and those efforts combined with the allocation-based tiered rates, have resulted in somewhat hardened levels of demand. The District will employ additional strategies to achieve the necessary demand reductions in a shortage situation. Most of the effort will be focused on providing additional outreach to high usage tier customers.

1. *Public Outreach:* An outreach program will educate the public and local leaders on the water supply situation; what actions are proposed; what the intended achievements are; and how these actions are to be implemented. This will be accomplished by having key District personnel present to groups such as the city council, community associations, chambers of commerce, business groups, etc. An endorsement of proposed District plans by these groups will assist in obtaining the public support essential in confronting water shortages.

   The public at large will be informed through press releases, billing inserts, water conservation booths, community association meetings, newsletters, church groups, etc. Literature will be provided on the shortage condition, conservation methods, and water-saving devices and be distributed through the fire and police stations, libraries, city hall, schools, shopping center,

recreation facilities, etc. Certain behavior modifications, such as those listed below, can help address the need for immediate conservation.

- Survey plumbing every two months and eliminate water loss resulting from leaky plumbing fixtures.
- Restrict showers to five minutes or less; fill the bath tub no more than one-quarter full.
- Do not run water unnecessarily while shaving, brushing teeth, bathing, preparing food, etc.
- Run only full loads of laundry and dishes.
- Reduce landscape watering.
- Fill swimming pools to a lower level to minimize water loss due to splashing.

2. *Education Programs:* School programs will focus on the water shortage situation. In addition to the usual District background information, the supply situation and conservation methods will be highlighted. Demonstrations using sample water-saving devices can be given; literature will be distributed.

3. *Logo:* A water conservation or shortage response logo will be adopted and vigorously promoted as a symbol to influence public attitudes toward water use.

4. *Media:* Extensive use of all available forms of media will be employed and coordinated with other agencies. This includes public service messages on radio and television and press releases in local newspapers. The messaging and level of response will be correlated with the need for demand reductions.

5. *Target Over-Allocation Customers:* District staff will ramp up its ongoing outreach efforts to more aggressively target over-allocation customers. Over-allocation use is considered wasteful use; customers in these tiers will be contacted via letter, telephone, e-mail and other means. On-site assistance/audits will help identify the source of the over-allocation use and provide recommendations to address the problem.

6. *Customer Service:* Anyone observing potential over-use within IRWD's service area will be encouraged to call in to IRWD's Customer Service Department for assistance. A customer

service representative will generate a customer service request (CSR) linked to the account to ensure appropriate follow-up and resolution by the District.

Response Measures: Demand Management and Use of Allocation-Based Rates

The allocation-based tiered rate structure adopted by IRWD in 1991 is intended to function as a tool to promote ongoing water use efficiency. Water is allocated on an individual customer basis established upon specific indoor uses and outdoor irrigation needs. The structure includes a five-tiered system for residential customers and a four-tiered system for non-residential customers, and charges progressively higher rates for progressively higher amounts of water used. Use within a customer's allocation is encouraged through a significantly tiered commodity pricing system which discourages wasteful use. The allocation-based tiered rates provide IRWD with an effective mechanism to alter demand through pricing.

Analysis of Usage and Tiers

A detailed analysis of the usage and tiers, with the most recently available data, is one of the first steps that should be undertaken in developing demand management strategies, including potential adjustments to the tiers and allocations. Appendix A: 2007 Annual Usage and Tier Break-Down shows the annual usage and tier break-down information for treated and untreated water sources, based on data from calendar year 2007. The first two tiers shown (1 and 2) indicate usage within allocation. Tiers 3 to 5 indicate over-allocation use.

Basic water allocations should be reviewed on a periodic basis taking into consideration changes since the most recent review of these allocations, including changes to the plumbing code that improve water use efficiency, water conservation devices and more efficient irrigation systems available to the average customer. Beyond this, there are several mechanisms that can be employed either separately or in combination to achieve the necessary level of demand reductions.

Allocation Adjustment Strategies for Demand Management

1. Adjusting the Tier Thresholds: This strategy does not adjust the actual allocation formula itself, but rather adjusts the percentage thresholds for the over-allocation tiers. The current tiers and thresholds for the various account types are shown in Table 3. Adjusting the tier thresholds downward would have the effect of shifting more use into the higher over-allocation tiers. Customers in these tiers would be subjected to increased rates depending on the extent of their use (percentage of use above allocation). Reducing the tier thresholds would send stronger price signals by moving over-using customers into the higher tiers.

Table 3: Allocation-Based Rates Tier Thresholds

Tier	Percentage of Allocation		
	Residential	Irrigation	Non-Residential
Low Volume	0-40%	0-40 %	N/A
Base	41-100%	41 – 100%	0-100%
Inefficient	101 – 150%	101 – 110%	101 – 110%
Excessive	151 -200%	111 -120%	111 -120%
Wasteful	201% +	121% +	121% +

2. Allocation Adjustments: An adjustment to the allocation entails refining the allocation formula. This can be done either as a simple percentage adjustment or by adjusting a specific portion of the formula. For example, residential allocations are made up of an indoor plus an outdoor allocation component. It is possible to adjust the outdoor component downward to allow for less outdoor irrigation or eliminate it altogether depending on the need for demand reductions. Water allocations could also be set to levels that would eliminate all outdoor water use including irrigation, car washing, pool filing, agricultural use of non-recycled water etc. Under this scenario the indoor component could be left the same or could be altered as necessary.

3. Rate Increases for Over-Allocation Use: This approach entails adopting higher rates for over-allocation use, and would be linked to purchases of imported water at Metropolitan's penalty rates, among other things.

These three types of allocation adjustments can be established and refined based on customer response in such a way that specified uses are discouraged. The allocations can be established in such a way that

certain uses are not included in the allocation. Customers engaging in these uses would receive over-allocation tier charges on their water bill.

In Levels One and Two, a combination of adjusting the tier thresholds and/or the allocations, as necessary, is likely to be sufficient to achieve the required demand reductions. In Levels Three and Four, those strategies, plus the use of rate increases with stronger price signals for over-allocation use, could be used to achieve further demand reductions. In all cases, adjustments to the allocations, tiers and rates will be at the discretion of the Board, and will be based on an assessment of the supply shortage, customer response and need for demand reductions.

Enforcement Mechanism:
Application of any or a combination of the allocation adjustment strategies will place customers into the higher usage tiers, which acts as a reporting and enforcement mechanism by creating a strong financial incentive for customers to reduce demands. The higher rates for above allocation use reflect and incorporate the cost of additional demand management measures, as well as the additional cost to IRWD of acquiring water supplies in a shortage.

Response Measures: Mandatory

Extreme shortage conditions (severe Level Three and Level Four) may require that the District adopt restrictions and/or ration water for health and safety purposes only. A system outage requires a rapid response based on the fact that there is typically a need for more immediate action to deal with an emergency situation. In a system outage emergency, the IRWD Board of Directors will declare a shortage based upon the projected impact of the system outage. Since adjustments to tiers and allocations typically have a time lag in implementation and effect, those measures will be of limited usefulness in a system outage. Therefore, in addition to the measures always in effect, the Board may impose any combination of the following mandatory measures and rationing to alleviate demands.

1. *Potable Irrigation Ban*: Outdoor irrigation would be the initial target for any demand reductions. Demand reductions or eliminations that cannot be met through voluntary measures and financial incentives related to adjustments in the allocation based rate structure, would be attained through a ban on potable irrigation. Table 4 indicates the potential demand reductions that could be

attained from 30%, 60% and complete elimination of outdoor irrigation. This includes dedicated landscapes, mixed use commercial accounts and residential outdoor irrigation.

Table 4: Potential Water Savings (AF) Based on Irrigation Cutbacks:

% Irrigation Cutback	**30%**	**60%**	**100%**
Potable Irrigation	8,980	17,959	29,932
Untreated Irrigation	351	701	1,169
Total	9,330	18,660	31,101

2. *Ban on car-washing and pool-filling:* Demand reductions on car-washing and pool filling that cannot be achieved through voluntary measures and financial incentives related to adjustments in the allocation-based rate structure would be attained through a ban on these actions.

Enforcement Measures

1. *Flow restrictors:* Under extreme conditions of noncompliance, the District could install flow restrictors in individual service lines. Thus, water would be available for drinking, cooking, sponge baths, and slow fill of toilet tanks, but showers and other high volume type uses would not be possible. Under these conditions individual customer reaction would be severe. It would probably be necessary to augment the customer service field service staff to maintain surveillance of these services to assure that unauthorized changes are not made by the customer.

2. *Mandatory Restrictions and Fines:* The District's ability to establish restrictions on water use and to possibly discontinue non-health and safety related service in the case of repeat violators is provided for under the Water Code of the State of California Chapters 3 and 3.5).

PART III: SHORTAGE RESPONSE PLAN

IRWD Water Supply Shortage Levels

In the event of a shortage, IRWD's Board of Directors, in accordance with the provisions of the California Water Code, will determine and declare the shortage level based on an assessment of the available supplies and demands, and may adjust the measures applied based on response in order to achieve the appropriate level of reduction. The following are the levels of shortage which may be declared; the approximate ranges of conditions the levels represent; and the reductions to be achieved:

Level One (Shortage Warning - up to 10% shortage):

Measures selected would be designed to achieve the following objectives:

Objectives:

- Public awareness of water supply situation and conservation opportunities
- Encourage diligent repair of water leaks
- Reduce over-allocation use
- Reduce outdoor over-irrigation

Measures: The measures used in Level One are primarily voluntary actions that modify customer behavior resulting from an enhanced public awareness campaign. In addition, increased outreach targeted toward over-allocation customers to help them identify the source of their overuse, and correct the problem should be sufficient to meet the objectives in Level One.

Costs and Outcomes: Based on 2007 data, a supply shortage of 10% represents approximately 6,600 AF. Information from the 2007 Annual Usage and Tier Break-Down presented in Appendix A indicates that over allocation use (sum of usage in tiers 3-5) accounts for approximately 4,200 AF of non-recycled water usage. Therefore, reducing the over-allocation use, combined with a strong public awareness campaign is expected to be sufficient to achieve the necessary reductions in Level One. The cost to implement voluntary responses is minimal, especially considering the return in reduced demand on the investment. None of the recommended steps would be difficult to implement or administer. The District has the basic infrastructure to pursue most voluntary measures through the Public Affairs and Conservation Departments. However, the District may need to conduct training and adjust its staff resources to effectively provide additional outreach to high usage tier customers.

Level Two (Significant Shortage Condition - 10-25% shortage): Measures selected would be designed to incorporate the objectives listed under Level One, and achieve the following further reduction in use:
Objectives:

- Review of allocations and potential adjustments to reduce outdoor irrigation and agricultural uses by 30%, or a percentage to be specified in the shortage declaration, based on a supply and demand analysis.
- Discourage filling of fountains, pools and water features and other discretionary uses.

Measures: Use of allocation and tier threshold adjustments is expected to be sufficient to achieve the necessary demand reduction objectives in a Level Two shortage. Adjustments to the allocations would employ the demand management/allocation adjustment strategies described in Part II of the document (pages 8-9).

Costs and Outcomes: A Level Two shortage can be offset by voluntary public response and perhaps minimal additional measures, such as reducing water allocations for non-crucial water uses including irrigation demands. Again using the 2007 Annual Usage and Tier Break-Down in Appendix A, a 30% reduction in potable irrigation and agricultural use (potable and untreated) would reduce the demands by an additional 9,300 AF , which combined with the Level One measures would result in a reduction in total demand of approximately 25%. Currently, there are some agricultural users using treated water within IRWD's service area. However, in the future, this demand is anticipated to decline to zero, in which case additional measures and adjustments to the allocations may be necessary to achieve the necessary Level 2 reductions. Depending on the duration and severity of the Level Two shortage, additional temporary staff in water conservation may be required to increase water awareness campaigns and assist customers with reduced irrigation allocations.

Level Three (Severe Shortage Condition - 25-40% shortage): Measures selected would be designed to incorporate the objectives listed under Level Two, and achieve the following further reduction in use.
Objectives:

- Further reductions in and/or eliminations of non-essential uses.
- Further reduce outdoor irrigation and agricultural uses by 60%, or a percentage to be specified in the shortage declaration, based on an analysis of supply and demand.
- Reduction in commercial, industrial and institutional use by 10%, or a percentage to be specified in the shortage declaration, based on an analysis of supply and demand.

- Elimination of specific municipal uses such as street cleaning, hydrant flushing, water-based recreation, etc.
- Activation of a District Task Force to investigate and consult with high-volume users (i.e. public authorities, universities, community associations, etc.) to assist in reducing the water demands of their properties.

Measures: Again, use of the demand management/allocation-based rate adjustment strategies described in Part II of this document (pages 8-9) will used as a key tool to achieve these objectives. For example, allocations can be reduced to minimize outdoor use and other discretionary uses by excluding those types of uses from the allocation. If necessary, higher rates for over-allocation use could also be adopted, at the discretion of the Board.

Costs and Outcomes: While it is difficult to precisely estimate the total reduction in demand that would be realized from the cumulative measures taken in Levels One, Two and Three, a Level Three shortage condition could entail significant adjustments to allocations and the implementation of mandatory measures to meet the District's reduction needs. In addition to increasing over-allocation tier charges, all common area landscape irrigation and agricultural irrigation should be reduced drastically, or eliminated completely if necessary by adjusting the water use allocations. Reduction of allocations of treated and untreated water serving irrigation (including residential landscapes) by 60% would reduce total demand by approximately 27% (see Appendix A: 2007 Annual Usage and Tier Break-Down). When one meter serves both internal use and landscaping, monitoring and public support would be needed to ensure that no irrigation takes place. An expanded irrigation group would be effective in these efforts. Untreated or recycled water use would only be reduced as needed based on the impact of reduced wastewater flows to recycled water production. Commercial, industrial and institutional customer allocations would be reduced by up to 10%.

Level Four (Crisis Shortage Condition - more than 40% shortage): Measures selected would be designed to incorporate the objectives listed under Level Three, and achieve the following further reductions in use:

Objectives:

- Cease all outdoor water uses for landscape and agriculture, subject to reserved rights relating to local wells.

Measures: A Level Four shortage would likely require further adjustments to allocations and the use of all the Demand Management/Allocation-Based Rates strategies described in Part II (pages 8-9) at the discretion of the Board. In addition, the Board may determine that it is necessary to use mandatory restrictions and possible discontinuation of non-health and safety related service in order to achieve the necessary demand reductions in a Level Four shortage.

Costs and Outcomes: If over-allocation charges had been previously avoided, this tool would almost certainly be needed at this level of supply deficiencies. Increasing the over-allocation tier charge, formulated upon projected penalty charges imposed by outside supply agencies, could be added to the allocation-based tiered rate structure, sufficient to encourage demand reduction to required levels, pay for an equivalent water conservation project designed to meet the required reduction in demands and provide a source of revenue to purchase additional supplies at penalty rates. Over-allocation usage tier charges would also offset the additional administrative and implementation costs to the district including increased staffing to address shortages and enhancement and expansion of the District's water conservation programs and projects.

Appendix A

2007 Annual Treated and Untreated Water Usage

and Tier Break-Down

USER DECRIPTION	TOTAL (AFY)	Allocation Tier (AFY) 1	2	3	4	5
AG-TREATED	975	975	0	0	0	0
AG-UNTREATED	6,669	6,669	0	0	0	0
COMM-TREATED	8,431	8,153	163	114		0
COMM-UNTREATED	9	9	0	0	0	0
CONSTRUCTION	882	882	0	0	0	0
INDUST-TREATED	5,273	5,034	50	32	156	0
LAKE	141	141	0	0	0	0
IRRIG-TREATED	6,313	4,442	1,450	81	60	280
IRRIG-UNTREATED	1,164	647	396	22	16	83
MULTI-RESIDENTIAL	10,681	6,608	3,473	425	93	82
PUBLIC AUTHORITY-TREATED	2,652	2,463	26	21	142	0
SINGLE-RESIDENTIAL	23,537	13,138	7,784	1,878	450	287
TOTAL Acre-Feet	**66,731**	**49,166**	**13,341**	**2,575**	**917**	**733**
Percentage	**100%**	**75%**	**20%**	**4%**	**2%**	**1%**

APPENDIX F CUWCC BMP COVERAGE REPORTS

IRVINE RANCH WATER DISTRICT
2010 URBAN WATER MANAGEMENT PLAN

CUWCC BMP RETAIL COVERAGE REPORT 2009-2010

Foundation Best Management Practices for Urban Water Efficiency

Agency: Irvine Ranch Water District **District Name:** Irvine Ranch Water District **CUWCC Unit #:** 136
Retail Fiscal Reporting

Primary Contact Fiona Sanchez **Telephone** 949-453-5325 **Email:** sanchezf@irwd.com

Compliance Option Chosen By Reporting Agency:
(Traditional, Flex Track or GPCD)
GPCD if used:

GPCD in 2010	**214**
GPCD Target for 2018	212

Year	Report	Target		Highest Acceptable Bound	
		% Base	GPCD	% Base	GPCD
2010	1	96.4%	249	100%	258
2012	2	92.8%	240	96%	249
2014	3	89.2%	230	93%	240
2016	4	85.6%	221	89%	230
2018	5	82.0%	212	82%	212

Not on Track if 2010 GPCD is ≥ than target

GPCD in 2010	**214**
Highest Acceptable GPCD for 2010	**258**

On Track

Agency: Irvine Ranch Water District
Retail

District Name: Irvine Ranch Water District

CUWCC Unit #: 136
Fiscal Reporting

CUWCC BMP RETAIL COVERAGE REPORT 2009-2010

Foundation Best Management Practices for Urban Water Efficiency

Foundational BMPs

BMP 1.1 Operational Practices

Conservation Coordinator provided with necessary resources to implement BMPs?

		2009	2010
1.Conservation Coordinator provided with necessary resources to implement BMPs?	Name	Fiona Sanchez	Fiona Sanchez
	Title	Water Use Efficiency Manager	Water Use Efficiency Manager
	Email		sanchezf@irwd.c
		On Track	On Track

2. Water waste prevention documentation

On Track if any one of the 6 ordinance actions done, plus documentation or links provided

	2009	2010
Descriptive File	IRWD_WC_WaterSupplyShorta	
Descriptive File 2010		IRWD_WC_WaterSupplyShortageRegs.pdf
URL	To establish a water conservation and supply	
URL 2010		0
Describe Ordinance Terms	To establish a water conservation and supply	
Describe Ordinance Terms 2010		To establish a water conservation and supply shortage program that will reduce water consumption within the District through conservation,
	On Track	On Track

Agency: Irvine Ranch Water District
Retail

District Name: Irvine Ranch Water District

CUWCC Unit #: 136
Fiscal Reporting

CUWCC BMP RETAIL COVERAGE REPORT 2009-2010

Foundation Best Management Practices for Urban Water Efficiency

BMP 1.2 Water Loss Control

	2009		
Complete a prescreening Audit	yes	On Track	On Track if Yes
Metered Sales	56,635		
Verifiable Other Uses	56,655		
Total Supply	60,706		
(Metered Sales + System uses)/ Total Supply >0.89	1.87	On Track	On Track if =>.89, Not on Track if No
If ratio is less than 0.9, complete a full scale Audit in 2009?	Yes	On Track	On Track if Yes
Verify Data with Records on File?	Yes	On Track	On Track if Yes
Operate a system Leak Detection Program?	Yes	On Track	On Track if Yes

	2010		
Compile Standard Water Audit using AWWA Software?	Yes	On Track	On Track if Yes, Not on Track if No
AWWA file provided to CUWCC?	IRWDWaterAudit	On Track	On Track if Yes, Not on Track if No
AWWA Water Audit Validity Score?	86		Info only until 2012
Completed Training in AWWA Audit Method?	yes		
Completed Training in Component Analysis Process?	Yes		Info only until 2012
Complete Component Analysis?	Yes		Info only until 2012
Repaired all leaks and breaks to the extent cost effective?	Yes	On Track	On Track if Yes, Not on Track if No
Locate and repair unreported leaks to the extent cost effective.	Yes	On Track	On Track if Yes, Not on Track if No
Maintain a record-keeping system for the repair of reported leaks, including time of report, leak location, type of leaking pipe segment or fitting, and leak running time from report to repair.			Info only until 2012

Provided 7 types of Water Loss Control Info — Info only until 2012

Leaks Repaired	Value Real Losses	Value Apparent Losses	Miles Surveyed	Press Reduction	Cost of Interventions	Water Saved
0	$ -	$ -	0	Off	$ -	0

Agency: Irvine Ranch Water District
Retail

District Name: Irvine Ranch Water District

CUWCC Unit #: 136
Fiscal Reporting

CUWCC BMP RETAIL COVERAGE REPORT 2009-2010

Foundation Best Management Practices for Urban Water Efficiency

1.3 METERING WITH COMMODITY RATES FOR ALL NEW CONNECTIONS AND RETROFIT OF EXISTING CONNECTIONS

	2008	2009		2010		
Exemption or 'At least as Effective As' accepted by CUWCC						If signed MOU prior to 31 Dec 1997, On Track if all connections metered; If signed after 31 Dec 1997, complete meter installations by 1 July 2012 or within 6 yrs of signing and 20% biannual reduction of unmetered connections.
Numbered Unmetered Accounts		0	On Track	0	On Track	On Track if no unmetered accounts
Metered Accounts billed by volume of use		Yes	On Track	Yes	On Track	Volumetric billing required for all connections on same schedule as metering
Number of CII accounts with Mixed Use meters		555		555		Info only
Conducted a feasibility study to assess merits of a program to provide incentives to switch mixed-use accounts to dedicated landscape meters?		No	On Track	No	On Track	On Track if Yes or No until 2010
Feasibility Study provided to CUWCC?		Yes	On Track	No	On Track	On Track if Yes, Not on Track if No
Completed a written plan, policy or program to test, repair and replace meters		Yes	On Track	Yes	On Track	On Track if Yes, Not on Track if No

CUWCC BMP RETAIL COVERAGE REPORT 2009-2010

Foundation Best Management Practices for Urban Water Efficiency

Agency: Irvine Ranch Water District
Retail

District Name: Irvine Ranch Water District

CUWCC Unit #: 136

Coverage Report Date: May 19, 2011

Primary Contact Fiona Sanchez

Email: sanchezf@irwd.com

1.4 Retail Conservation Pricing

Metered Water Rate Structure

Date 2009 data received May 25, 2011
Date 2010 data received May 25, 2011

On Track if: Increasing Block, Uniform, Allocation, Standby Service; Not on Track if otherwise

Customer Class	2009 Rate Type	Conserving Rate?	Customer Class	2010 Rate Type	Conserving Rate?
Single-Family	allocation	Yes	Single-Family	allocation	Yes
Commercial	allocation	Yes	Commercial	allocation	Yes
Industrial	allocation	Yes	Industrial	allocation	Yes
Institutional	allocation	Yes	Institutional	allocation	Yes
Dedicated Irrigation	allocation	Yes	Dedicated Irrigation	allocation	Yes
	On Track			On Track	

Year Volumetric Rates began for Agencies with some Unmetered Accounts

Info only

Agencies with Partially Metered Service Areas: If signed MOU prior to 31 Dec. 1997, implementation starts no later than 1July 2010. If signed MOU after 31 Dec. 1997, implementation starts no later than 1July 2013, or within seven years of signing the MOU,

Agency: Irvine Ranch Water District
Retail

District Name: Irvine Ranch Water District

CUWCC Unit #: 136

Coverage Report Date: May 19, 2011

CUWCC BMP RETAIL COVERAGE REPORT 2009-2010

Foundation Best Management Practices for Urban Water Efficiency

Adequacy of Volumetric Rates) for Agencies with No Unmetered Accounts

Customer Class	2009 Rate Type	2009 Volumetric Revenues $1000s	2010 Rate Type	2010 Volumetric Revenues $1000s
Single-Family	allocation	$ 17,588	Single-Family	$ 17,730
Commercial	allocation	$ 4,175	Commercial	$ 4,107
Industrial	allocation	$ 2,443	Industrial	$ 2,478
Institutional	allocation	$ 1,204	Institutional	$ 1,152
Dedicated Irrigation	allocation	$ 3,188	Dedicated Irrigation	$ 2,908
Other		$ -		$ -
Other		$ -		$ -
Total Revenue Commodity Charges (V):		$ 28,597		$ 28,375
Total Revenue Fixed Charges (M):		$ 14,491		$ 16,085
Calculate: V / (V + M):		66%		64%
		On Track		On Track

Agency Choices for rates:

A) Agencies signing MOU prior to 13 June2007, implementation starts 1 July2007: On Track if (V / (V + M) ≥ 70% x .8 = **56% for 2009** and 70%x0.90 = **63% for 2010**; Not on track if (V / (V + M)) < 70%;

B) Use Canadian model. Agencies signing MOU after 13June2007, implementation starts July 1 of year following signing.

	2009	2010
Canadian Water & Wastewater Rate Design Model Used and Provided to CUWCC	No On Track	No On Track
If Canadian Model is used, was 1 year or 3 year period applied?		

Wastewater Rates

	2009	2010
Does Agency Provide Sewer Service?	Yes	Yes

If 'No', then wastewater rate info not required.

Customer Class	2009 Rate Type	Conserving Rate?	Customer Class	2010 Rate Type	Conserving Rate?
Single-Family	Increasing Block	Yes	Single-Family	Increasing Block	Yes
Commercial	Increasing Block	Yes	Commercial	Increasing Block	Yes
Industrial	Increasing Block	Yes	Industrial	Increasing Block	Yes
Institutional	Increasing Block	Yes	Institutional	Increasing Block	Yes
	Select a Rate Structure			Select a Rate Structure	
	Select a Rate Structure			Select a Rate Structure	
	Select a Rate Structure			Select a Rate Structure	
	On Track			On Track	

On Track if: 'Increasing Block', 'Uniform', 'based on long term marginal cost' or 'next unit of capacity'

BMP 2. EDUCATION PROGRAMS

BMP 2.1 Public Outreach Actions Implemented and Reported to CUWCC

	2009	2010
1) Contacts with the public (minimum = 4 times per year)	11	0
2) Water supplier contacts with media (minimum = 4 times per year, i.e., at least quarterly).	4	4
3) An actively maintained website that is updated regularly (minimum = 4 times per year, i.e., at least quarterly).	Yes	yes
4) Description of materials used to meet minimum requirement.	General water conservation information Newsletter articles on conservation Website Select a public contact News releases Select a type of media contact Select a type of media contact Select a type of media contact	General water conservation information Newsletter articles on conservation Website Select a public contact News releases Select a type of media contact Select a type of media contact Select a type of media contact
5) Annual budget for public outreach program.	$ 43,000	$ 43,000
6) Description of all other outreach programs	Description is too large for text area. Data will be stored in the BMP Reporting database when online.	Description is too large for text area. Data will be stored in the BMP Reporting database when online.
	OnTrackfor 5 Actions	OnTrackfor 5 Actions

All 6 action types implemented and reported to CUWCC to be 'On Track')

CUWCC BMP RETAIL COVERAGE REPORT 2009-2010

Foundation Best Management Practices for Urban Water Efficiency

2.2 School Education Programs Implemented and Reported to CUWCC

	2009	2010	
Does a wholesale agency implement School Education Programs for this unility's benefit?	No	No	
Name of Wholesale Supplier?	Metropolitan Water District of Southern California, Municipal Water District of Orange	Metropolitan Water District of Southern California, Municipal	
1) Curriculum materials developed and/or provided by agency	Grade-specific work books, use of electronic key pads, during assemblies.	Project WET	Yes/ No
2) Materials meet state education framework requirements and are grade-level appropriate?	Yes	Yes	All 5 actions types implemented and reported to CUWCC to be 'On Track'
3) Materials Distributed to K-6?	yes	Yes	
Describe K-6 Materials	Grade specific work books.	Grade specific work books, conservation devices for 4,5, 6 grades, conservation kits for 6 grade students in workshop program	Describe materials to meet minimum requirements
Materials distributed to 7-12 students?	No	No	Info Only
4) Annual budget for school education program.	$ 95,000	$ 120,000	
5) Description of all other water supplier education programs	Tours, field trips, water education festivals, science fairs, poster contests, career fairs, Project WET, Solar Cup.	Tours, field trips, water education festivals, science fairs, poster contests, career fairs, Project WET, Solar Cup, Wild About the Wetlands	
	1 On Track	1 On Track	