**Santa Rosa Irrigation Designs**
**44-385 CAMINO LAVANDA**
**LA QUINTA, CALIFORNIA**
**(760)345-0688**

## Proposed Irrigation Conversion from Lawn to Drip Irrigation

**A.** Existing valves and lawn heads shall be abandoned. Existing valves not converted to drip valves shall remain in place. After the removal of existing lawn heads the existing risers shall be shorten to new grade and capped.

**B.** Ground cover areas.
The existing valves and heads shall be abandoned. A new Rainbird drip valve shall be added. New drip heads (see drip valve assembly legend) shall be added at each existing plant location. All new irrigation line shall be Schedule 40 PVC. The landscape contractor shall protect in place existing mainline and valves to remain.

**C.** Deep watering for trees.
Install deep watering bubblers in 3 feet perforated pipe at all tree locations. All tree deep watering bubblers shall be on their own valve circuit. Install three one gal. per minute bubblers per tree unless specified otherwise. Install bubblers three quarter of the distance between edge of trunk and tree drip line. Bubblers shall be installed 7 feet on center.

During transition from lawn to drip the landscape contractor shall hand water all existing trees to remain in place until the new irrigation system is installed.

D. Controllers.
Existing controllers shall be removed and a new Chevron Controller system installed per city of Palm Springs specifications.

E. Drip Installation for Existing New and or Existing Shrubs. See drip valve assembly legend, reference page #21 for drip valve assembly and emitter equipment callout. Install all emitters on the up-hill side of plant material. Emitters shall be installed two inches above finish grade. Any emitter left at an unacceptable height shall be reinstalled at no cost to the owner.

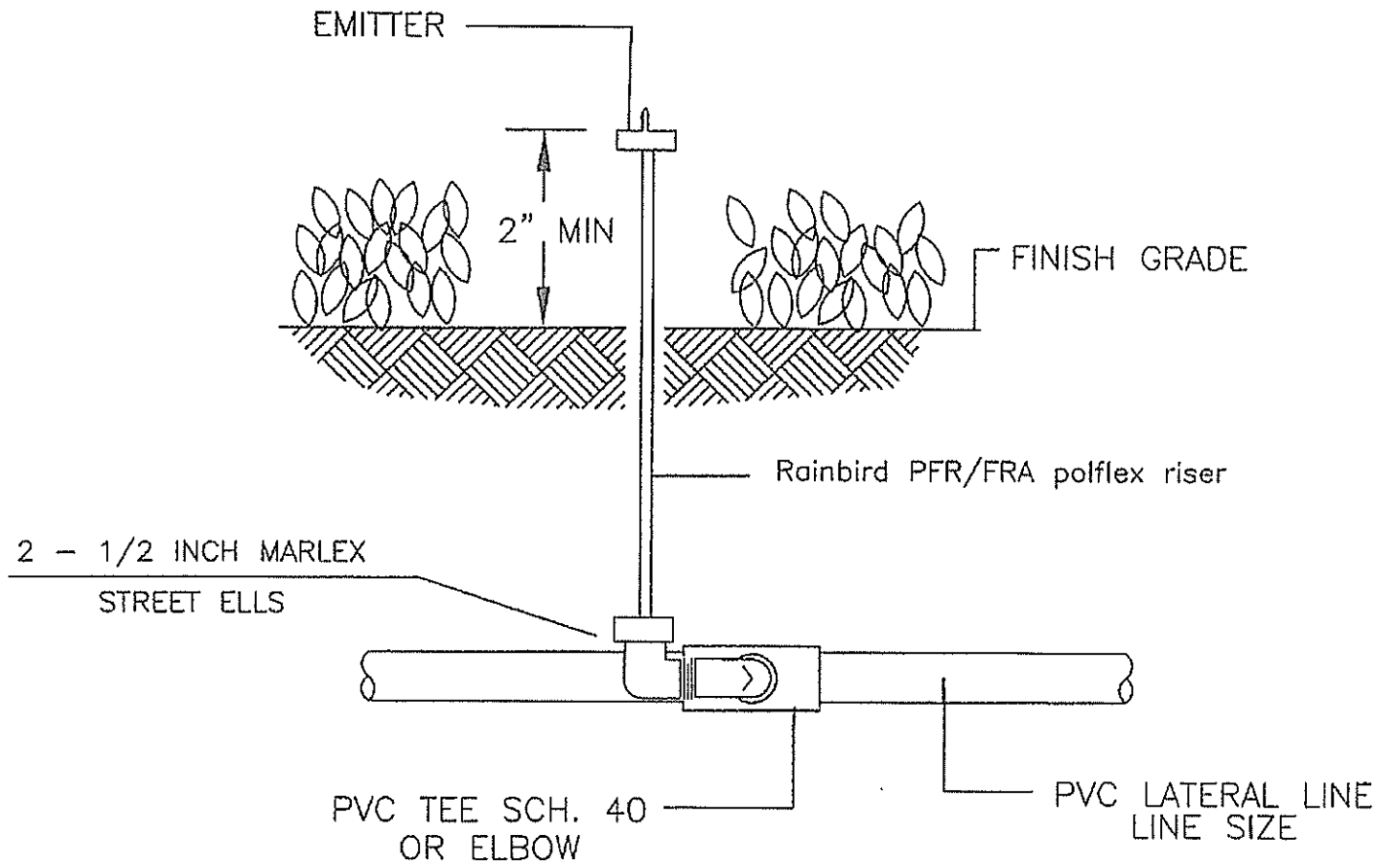


EMITTER INSTALLATION DETAIL

NOTE: FOR WIRE SIZES No. 14, No. 12 and No. 10.

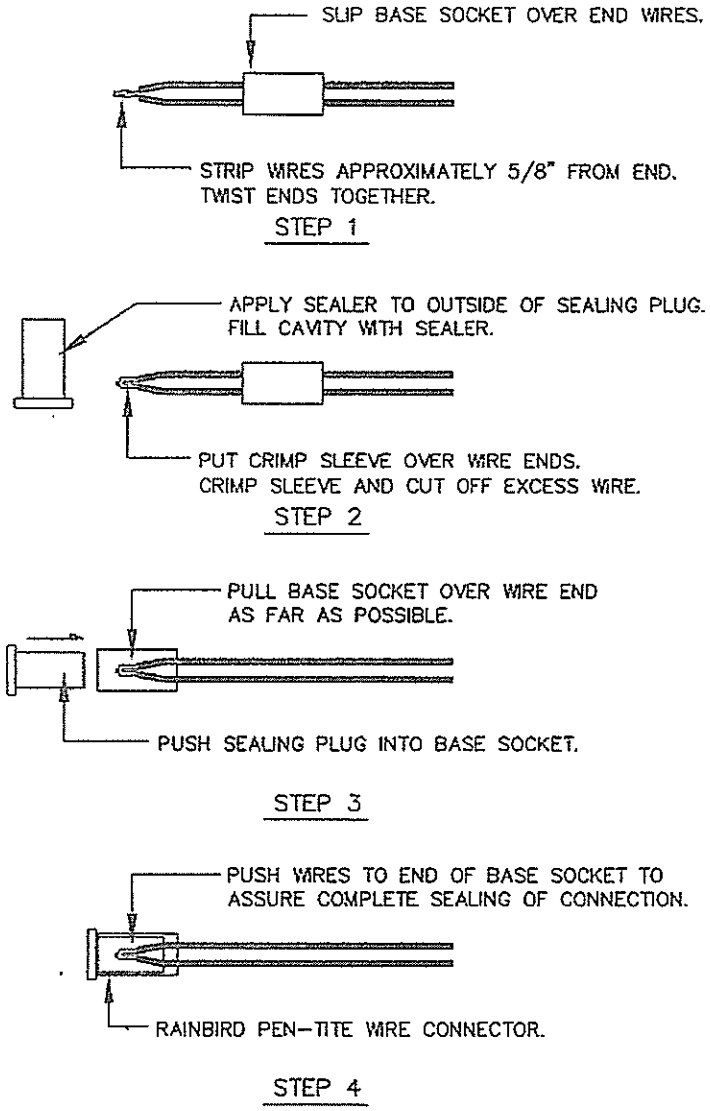


# TYPICAL WIRE CONNECTION DETAIL

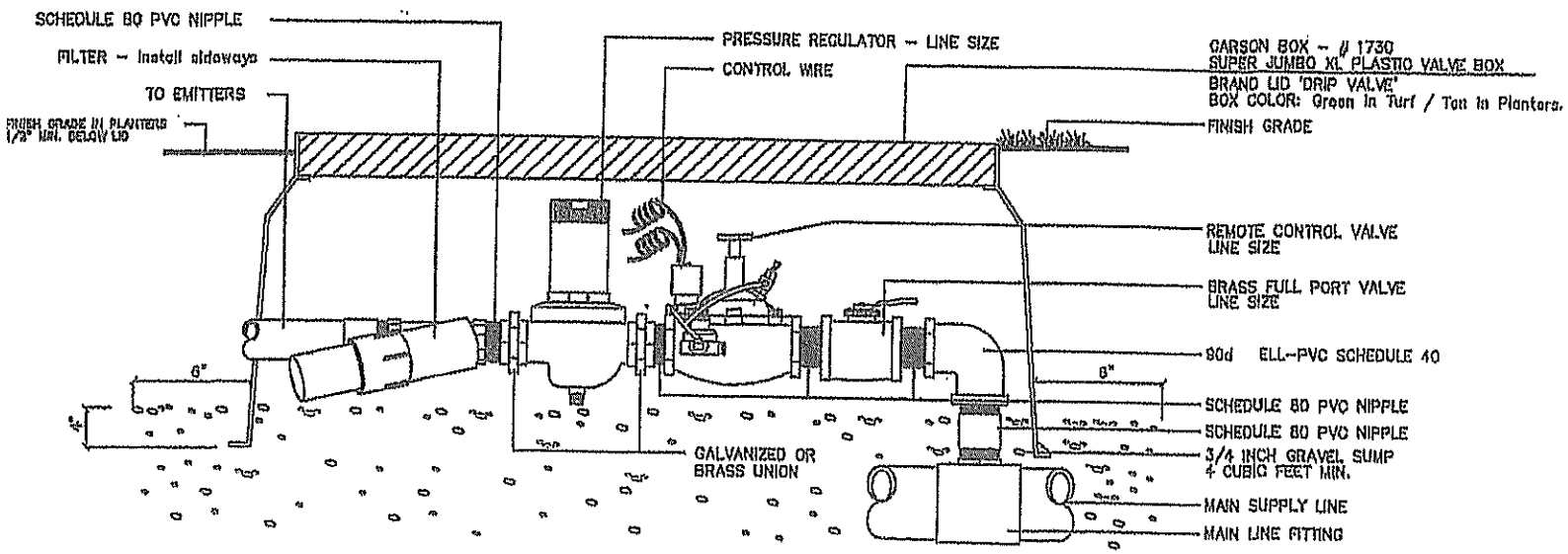


TYPICAL DRIP VALVE ASSEMBLY DETAIL

## MAIN SUPPLY
by others

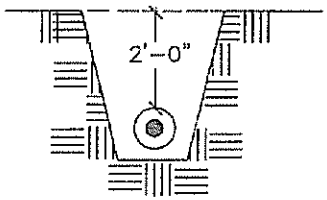


ALL MAIN SUPPLY LINES TO BE INSTALLED IN ACCORDANCE WITH MANUFACTURER'S INSTALLATION SPECIFICATIONS.

## LATERALS

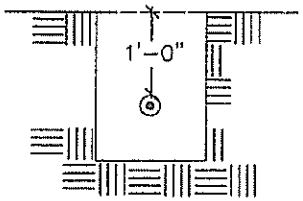


INSTALL RAINBIRD 'ACV SERIES' ADJUSTABLE CHECK VALVE. LINE SIZE - INSTALL PER EVERY 10 FEET OF GRADE CHANGE MINIMUM (OR AS NEEDED). PLACE IN 6' ROUND TAN VALVE BOX W/GRAVEL. MARK LID 'CK-VLV'

## 120 VOLT
WIRING

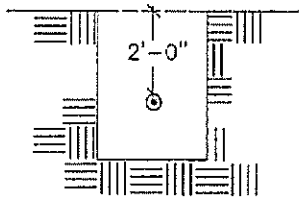


ALL 120 VOLT WIRING IN CONDUIT TO BE INSTALLED IN ACCORDANCE WITH LOCAL CODES.

## MAIN SUPPLY, LATERAL AND WIRING

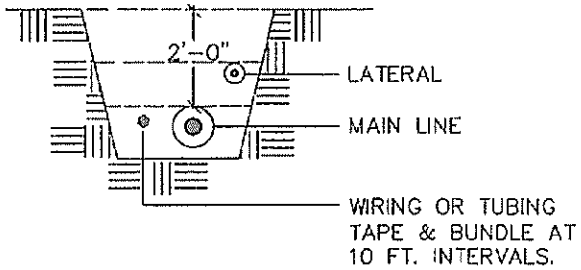


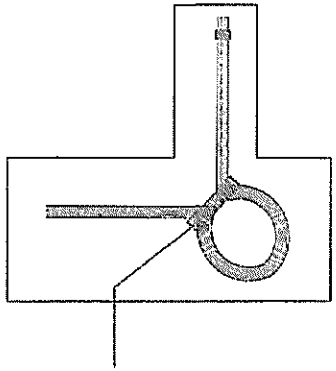

TIE A LOOSE 20 INCH LOOP IN ALL WIRING AT CHANGES OF DIRECTION GREATER THAN 30 INCHES. UNTIE ALL LOOPS AFTER ALL CONNECTIONS HAVE BEEN MADE.

## WIRING
24 VOLT

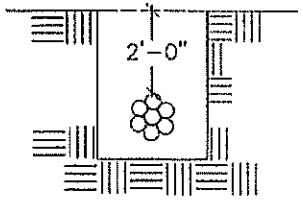


# TYPICAL TRENCHING DETAIL

NOTE:
INSTALL AT LOWEST POINT
AND/OR AT END OF LATERAL
PIPING AS NEEDED.

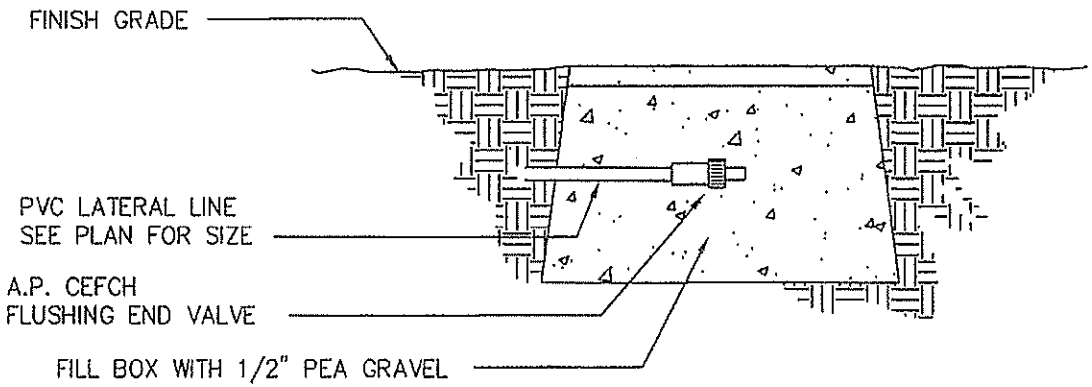


# AUTOMATIC END SELF FLUSHING VALVE DETAIL

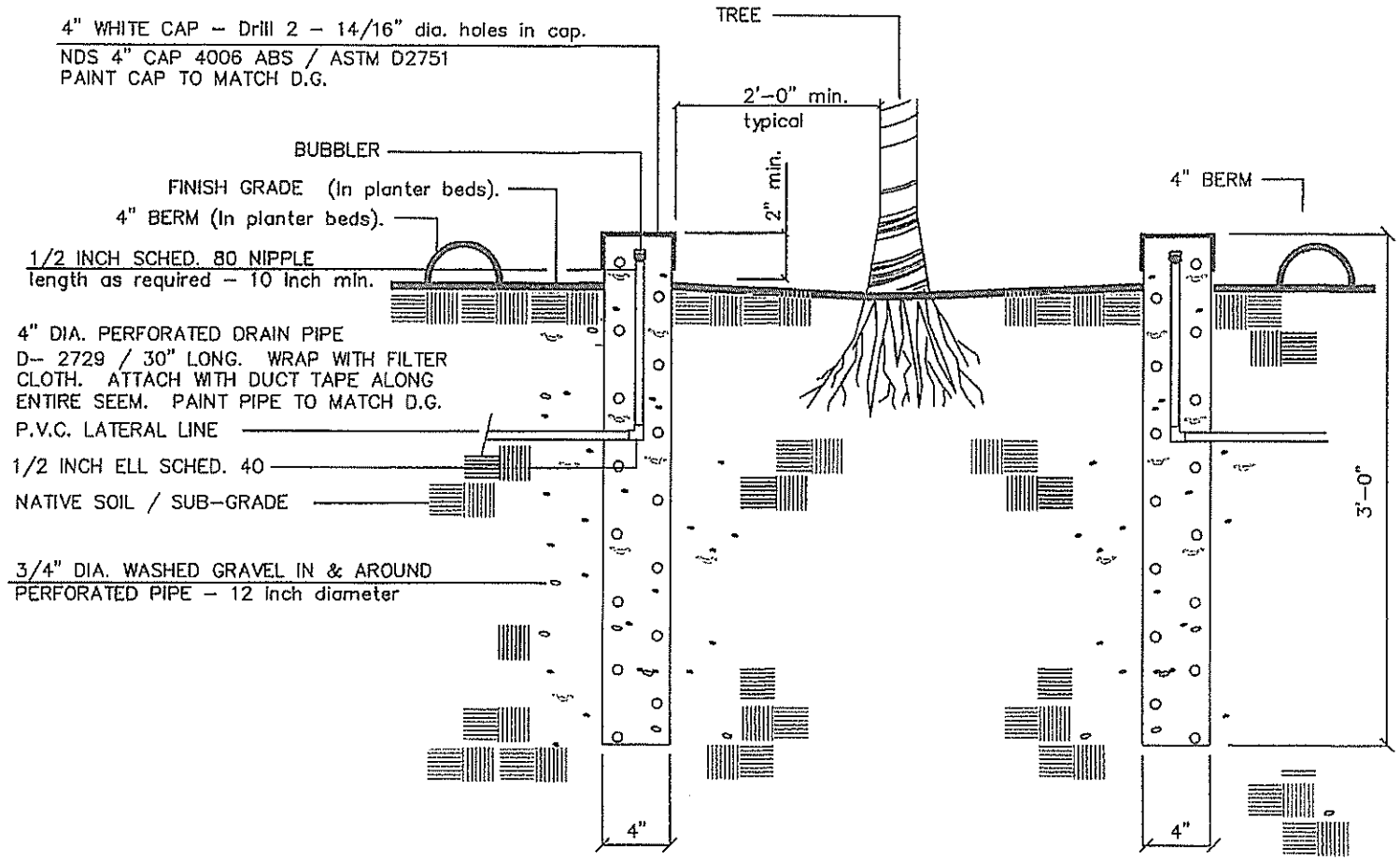


DEEP WATERING DETAIL (SHRUB AREAS)

# TYPICAL CONVERSION IRRIGATION LEGEND

| | | PSI | GPM |
|---|---|---|---|
| ● | TREE BUBBLER– Rainbird 1404 BUBBLERS | 30 | 1.0 |

DRIP VALVE EQUIPMENT ASSEMBLY:

BALL VALVE–Hammond model #8901 full port ball valve line size bronze

ELECTRIC VALVE–Irri–Trol Ultra Flow 1" 700 series

DRIP FILTER– Ag. Products 4E–1" with 150 mesh

PRESSURE REGULATOR– Wilkins #90 or approve equal

| | | PSI | GPH |
|---|---|---|---|
| □ | DRIP EMITTER– Rainbird XB–05PC–1032 FOR CACTUS ONLY | 20 | 0.50 |
| △ | DRIP EMITTER– Rainbird XB–20–PC–1032 FOR EXISTING AND NEW SHRUBS | 20 | 2.0 |

NOTE: INSTALL EMITTERS ON RAINBIRD PFR/FRA POLYFLEX RISERS(TYPICAL).

AUTOMATIC END SELF–FLUSHING VALVE– Ag. Products FCH valve in irrigation valve box.

VALVE IDENTIFICATION KEY:

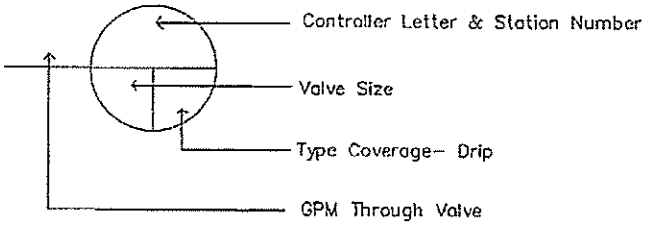


## EMITTER PVC PIPE SIZING CHART

| | | |
|---|---|---|
| 0 –180 | GPH | 1/2" |
| 181–360 | GPH | 3/4" |
| 362–840 | GPH | 1" |
| 841–1560 | GPH | 1–1/4" |

## PVC PIPE SIZING CHART

| | | |
|---|---|---|
| 0 – 5 | GPM | 1/2" |
| 6 – 10 | GPM | 3/4" |
| 11 – 15 | GPM | 1" |
| 16 – 25 | GPM | 1–1/4" |
| 26 – 40 | GPM | 1–1/2" |
| 41 – 60 | GPM | 2" |