	Author:	Date: 10/10/01	WORKING	READER DATE	CONTEXT:
	Project: Flow Diagram	Rev: 10/3/2007	DRAFT		TOP
Used At:			RECOMMENDED		
	Notes: 1 2 3 4 5 6 7 8 9 10		PUBLICATION		

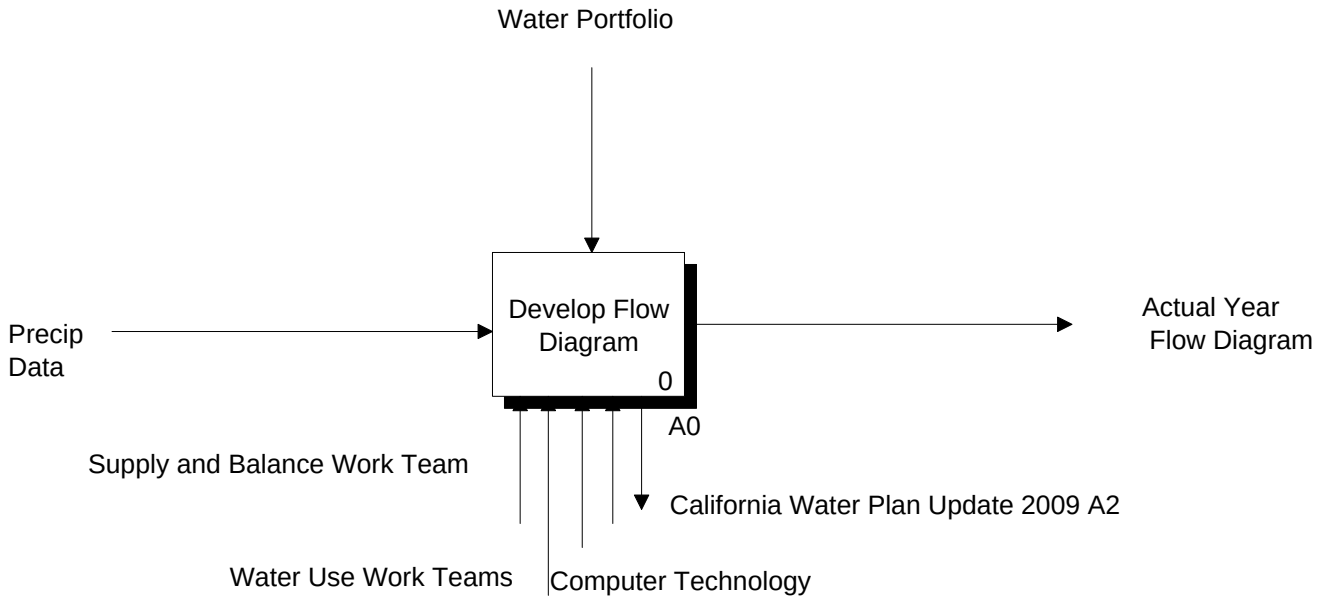

Purpose: California Water Plan Update 2009

Viewpoint: DWR

Node: A-0	Title: Flow Diagram	Number:
		Page: 1

Used At:	Author: Supply & Bal Workteam Date: 10/10/01		WORKING	READER DATE	CONTEXT:
	Project: Flow Diagram Rev: 10/3/2007		DRAFT		■
		■	RECOMMENDED		
	Notes: 1 2 3 4 5 6 7 8 9 10		PUBLICATION		A-0

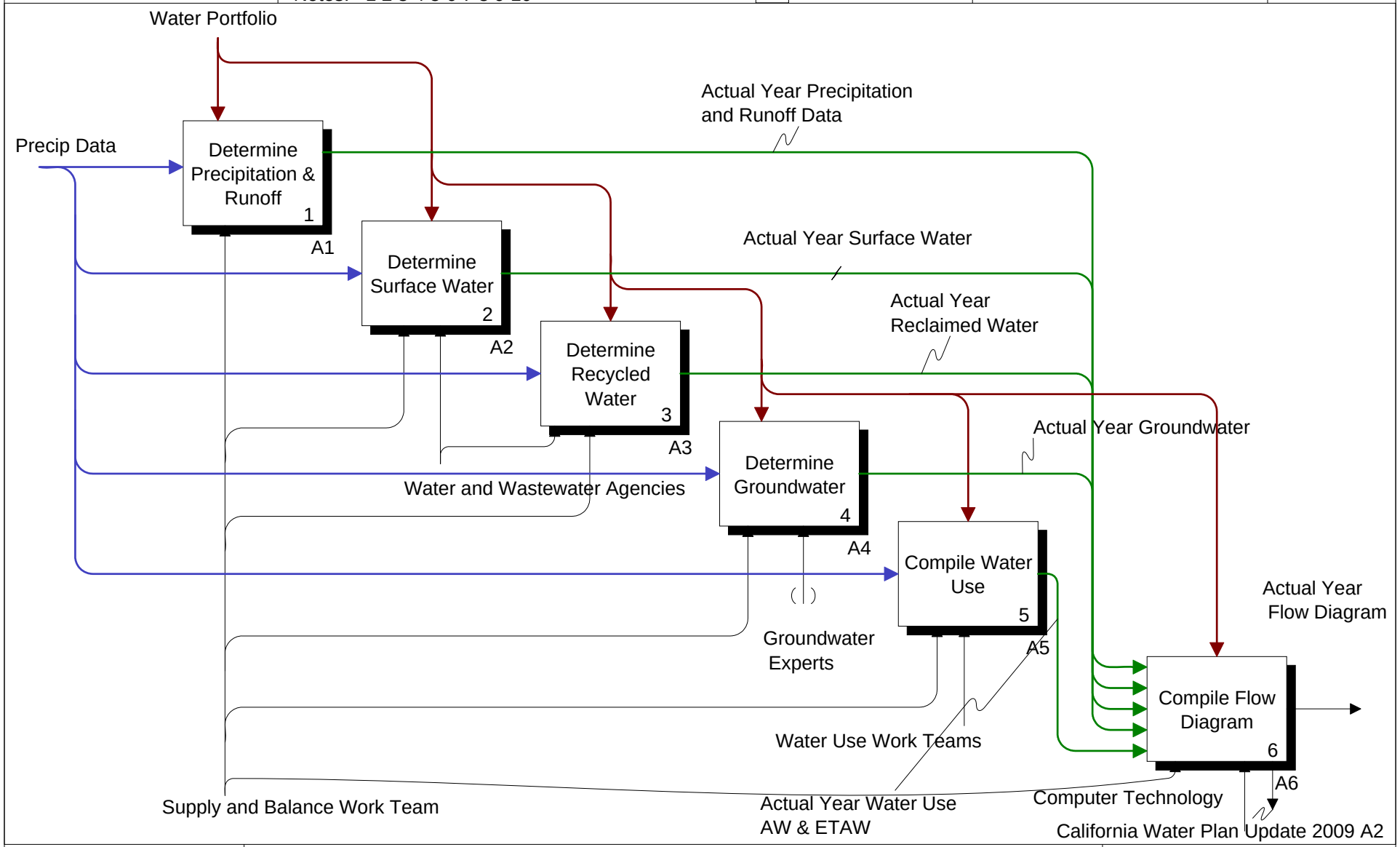

Node: A0	Title: Develop Flow Diagram	Number:
		Page: 2

Used At:	Author:	Date: 10/10/01	WORKING	READER	DATE
	Project: Flow Diagram	Rev: 10/10/2001	DRAFT		
			RECOMMENDED		
	Notes: 1 2 3 4 5 6 7 8 9 10		PUBLICATION		

CONTEXT: A0

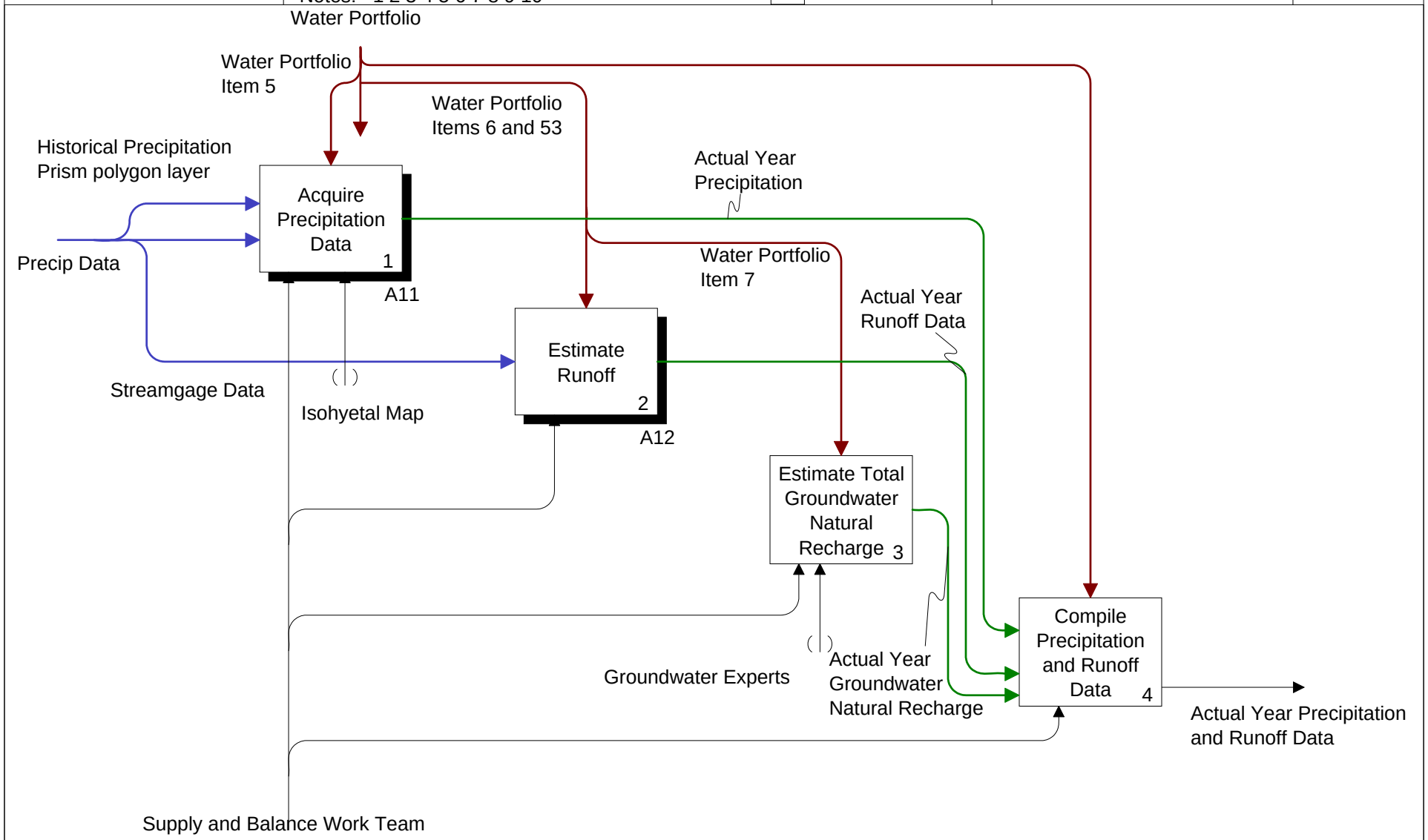

Node:	Title:	Number:
A1	Determine Precipitation & Runoff	

Used At:	Author:	Date: 11/16/2007	WORKING	READER	DATE
	Project: Flow Diagram	Rev: 11/16/2007	DRAFT		
			RECOMMENDED		
	Notes: 1 2 3 4 5 6 7 8 9 10		PUBLICATION		

CONTEXT: A1

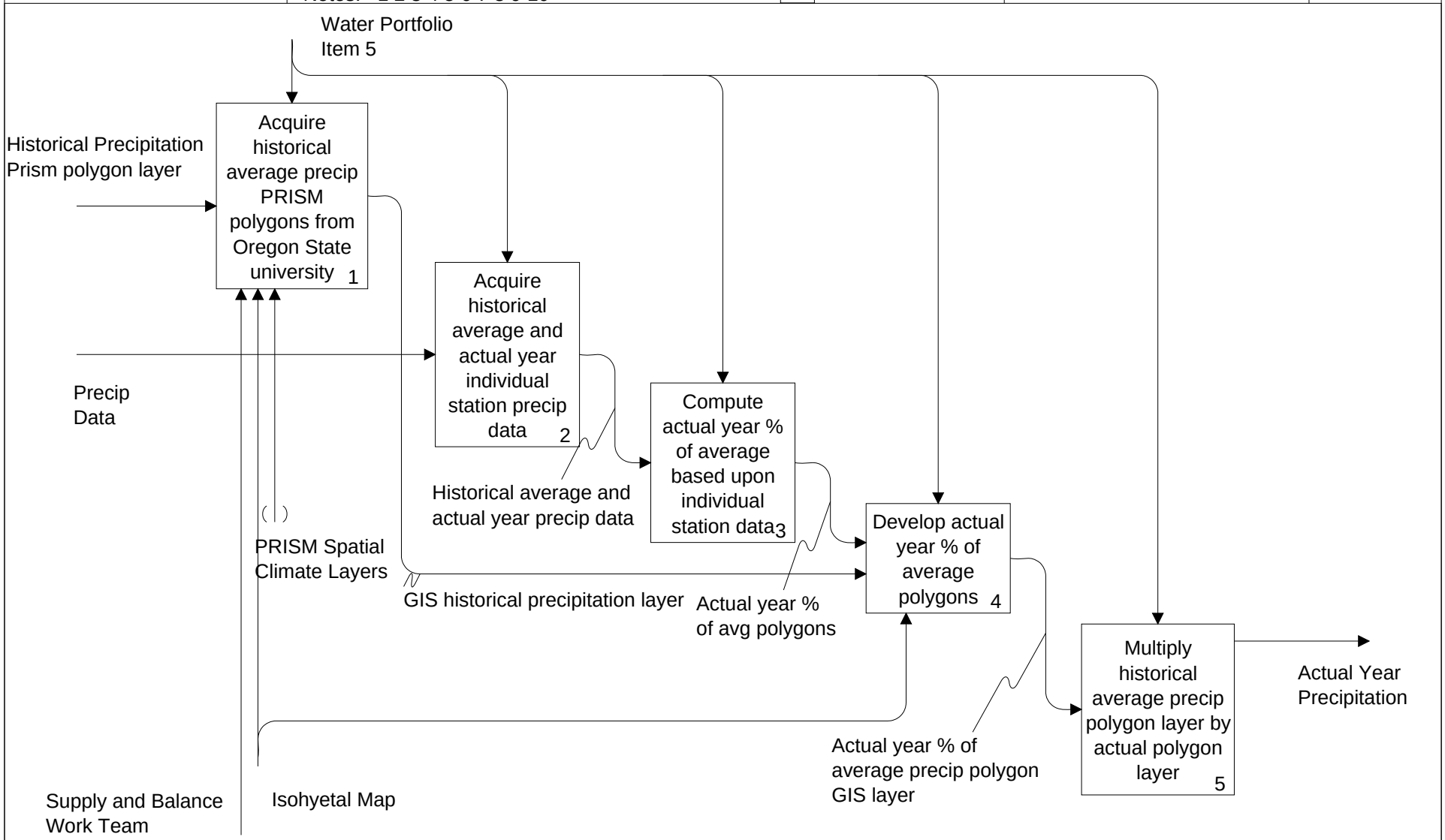

Node: A11	Title: Acquire Precipitation Data	Number:

	Author:	Date: 10/10/01	WORKING	READER DATE	CONTEXT:
Used At:	Project: Flow Diagram	Rev: 10/10/2001	DRAFT		
			RECOMMENDED		
	Notes: 1 2 3 4 5 6 7 8 9 10		PUBLICATION		A1

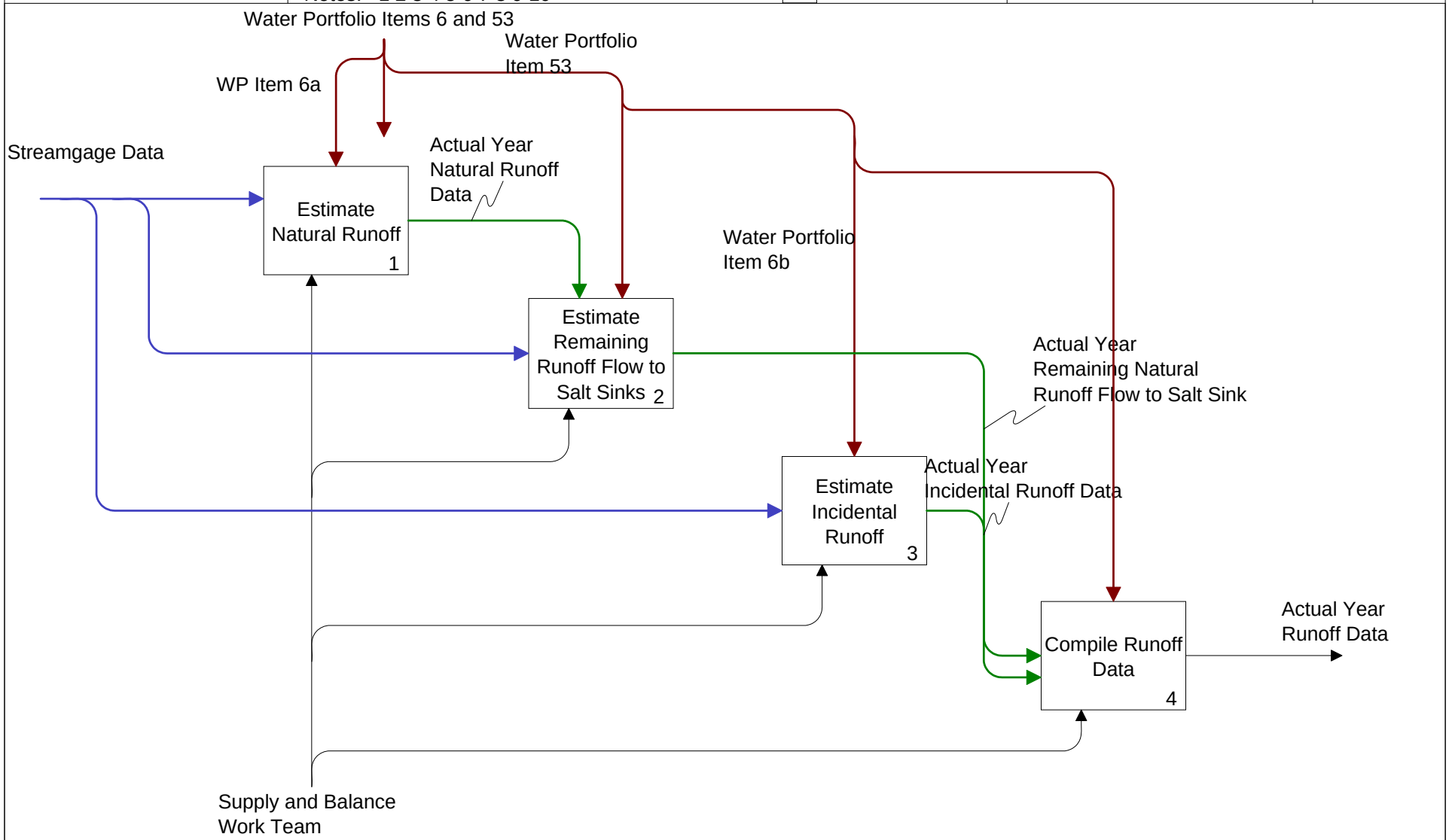

Node: A12	Title: Estimate Runoff	Number:
		Page: 5

When stream gage data is unavailable for a given basin, neighboring stations from adjacent basins are used to estimate flow. For example, there is no specific streamgage to read at the Carquinez Strait or the Golden Gate Bridge.

Used At:	Author: Supply & Bal Workteam Date: 10/10/01		WORKING	READER DATE	CONTEXT:
	Project: Flow Diagram Rev: 10/3/2007		DRAFT		
			RECOMMENDED		
	Notes: 1 2 3 4 5 6 7 8 9 10		PUBLICATION		A0

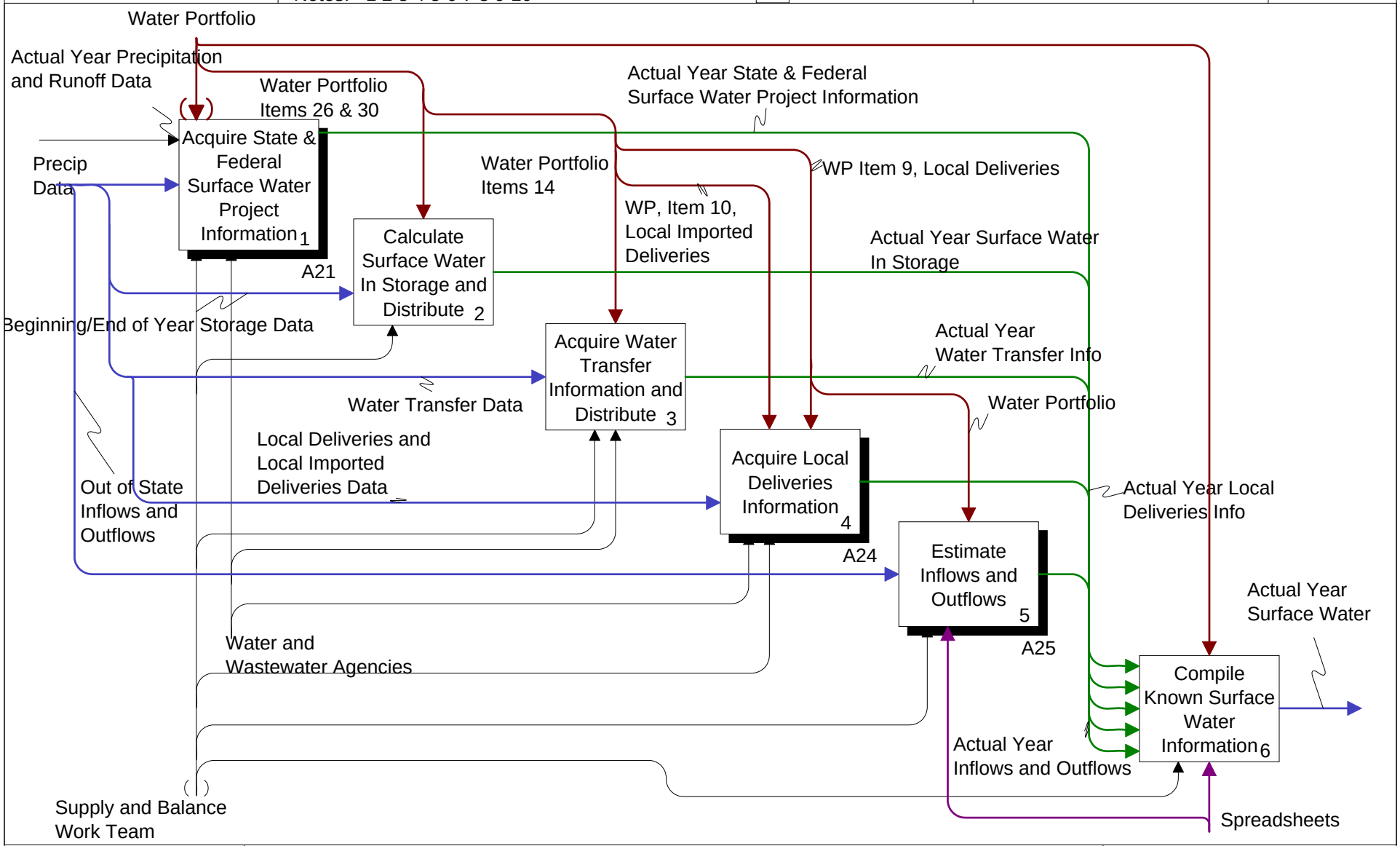

Node: A2	Title: Determine Surface Water	Number:
		Page: 7

Used At:	Author: Supply & Bal Workteam Date: 10/10/01		WORKING	READER DATE	CONTEXT:
	Project: Flow Diagram Rev: 10/3/2007		DRAFT		
			RECOMMENDED		
	Notes: 1 2 3 4 5 6 7 8 9 10		PUBLICATION		A2

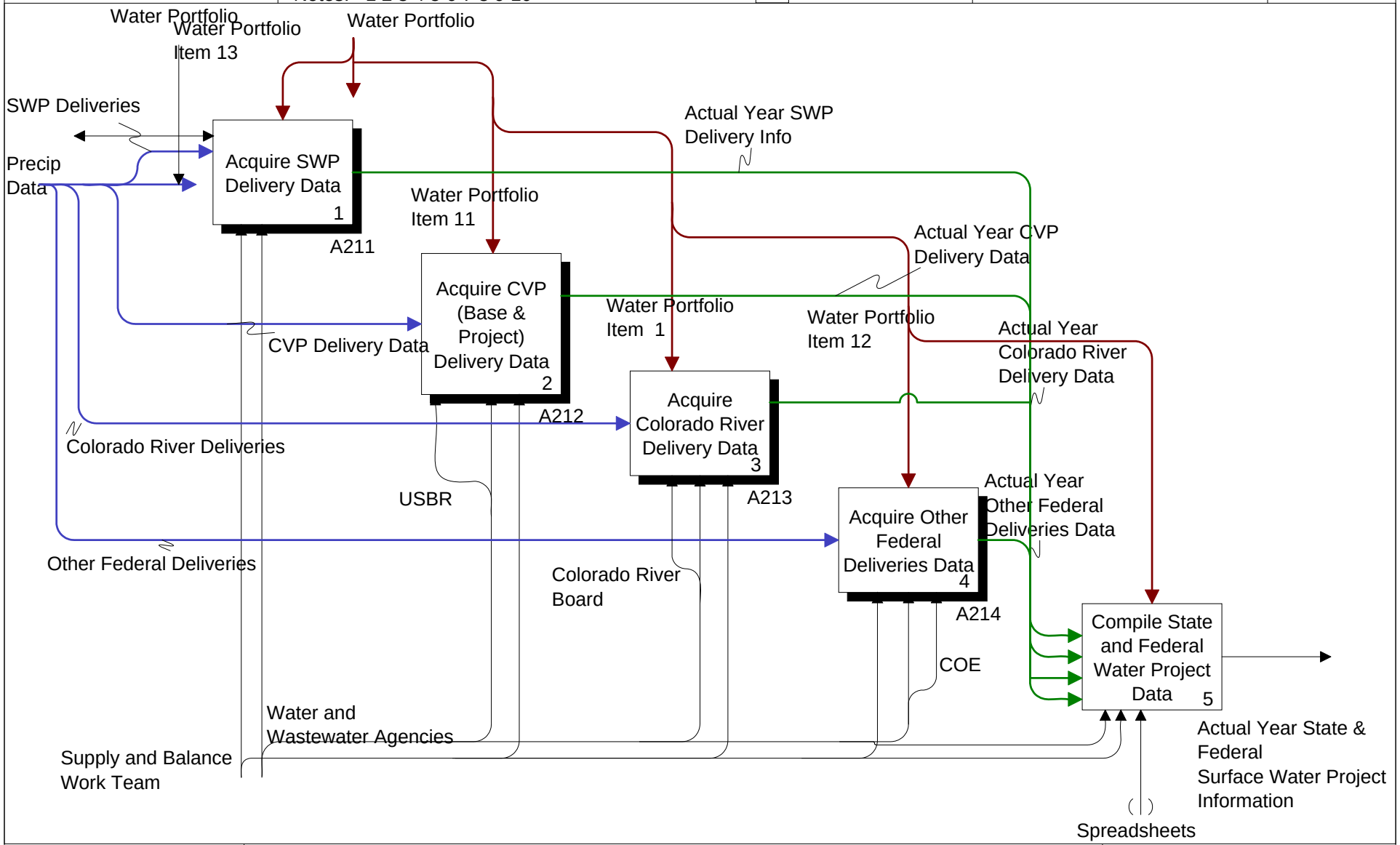

Node: A21	Title: Acquire State & Federal Surface Water Project Information	Number:
		Page: 8

Used At:	Author: Supply & Bal Workteam Date: 10/15/2001		WORKING	READER DATE	CONTEXT:
	Project: Flow Diagram Rev: 10/3/2007		DRAFT		
		■	RECOMMENDED		
	Notes: 1 2 3 4 5 6 7 8 9 10		PUBLICATION		A21

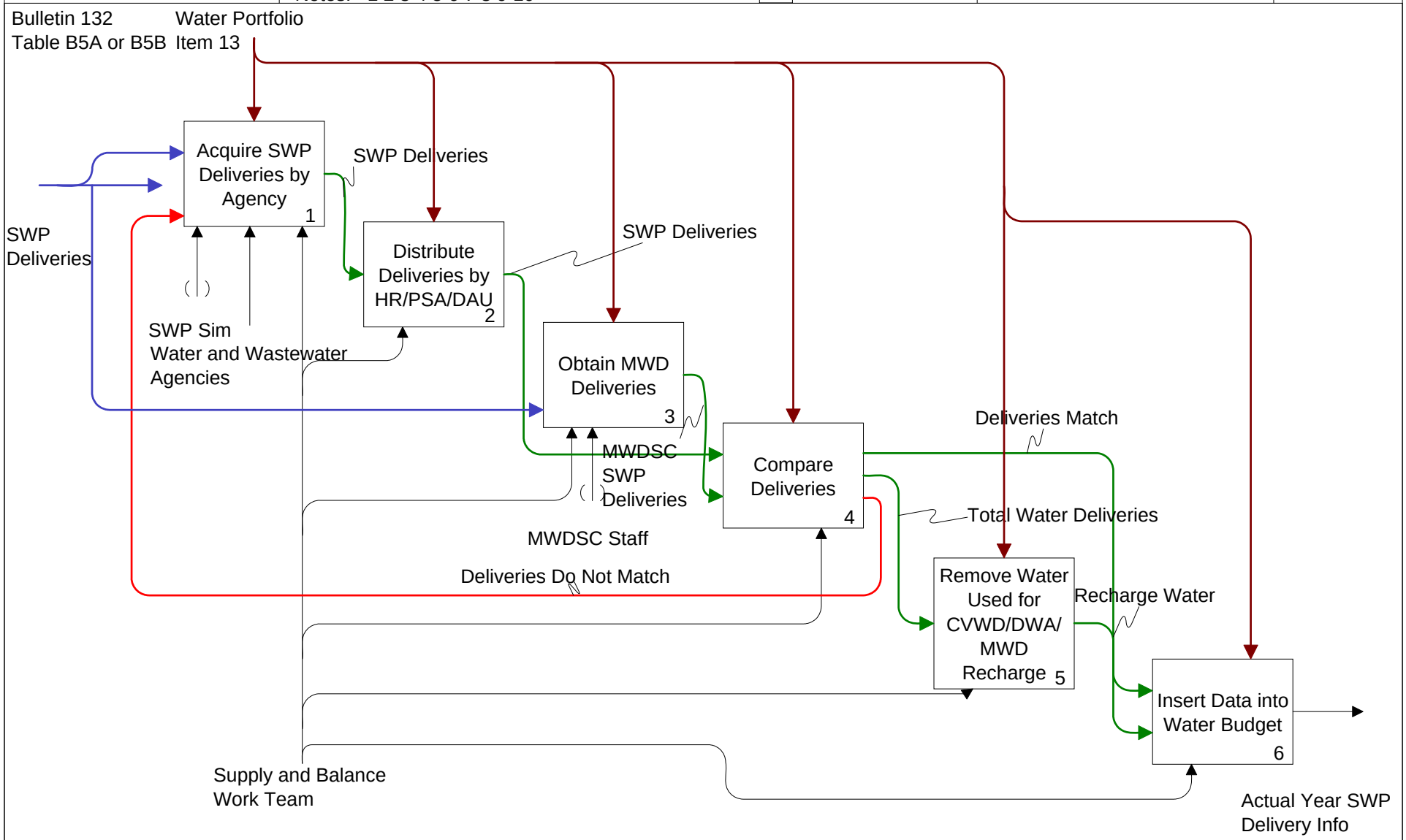

Node: A211	Title: Acquire SWP Delivery Data	Number:
		Page: 9

Obtain MWD Deliveries For Southern California District Only

Used At:	Author: Supply & Bal Workteam Date: 12/7/01		WORKING	READER DATE	CONTEXT:
	Project: Flow Diagram Rev: 10/3/2007		DRAFT		
			RECOMMENDED		
	Notes: 1 2 3 4 5 6 7 8 9 10		PUBLICATION		A21

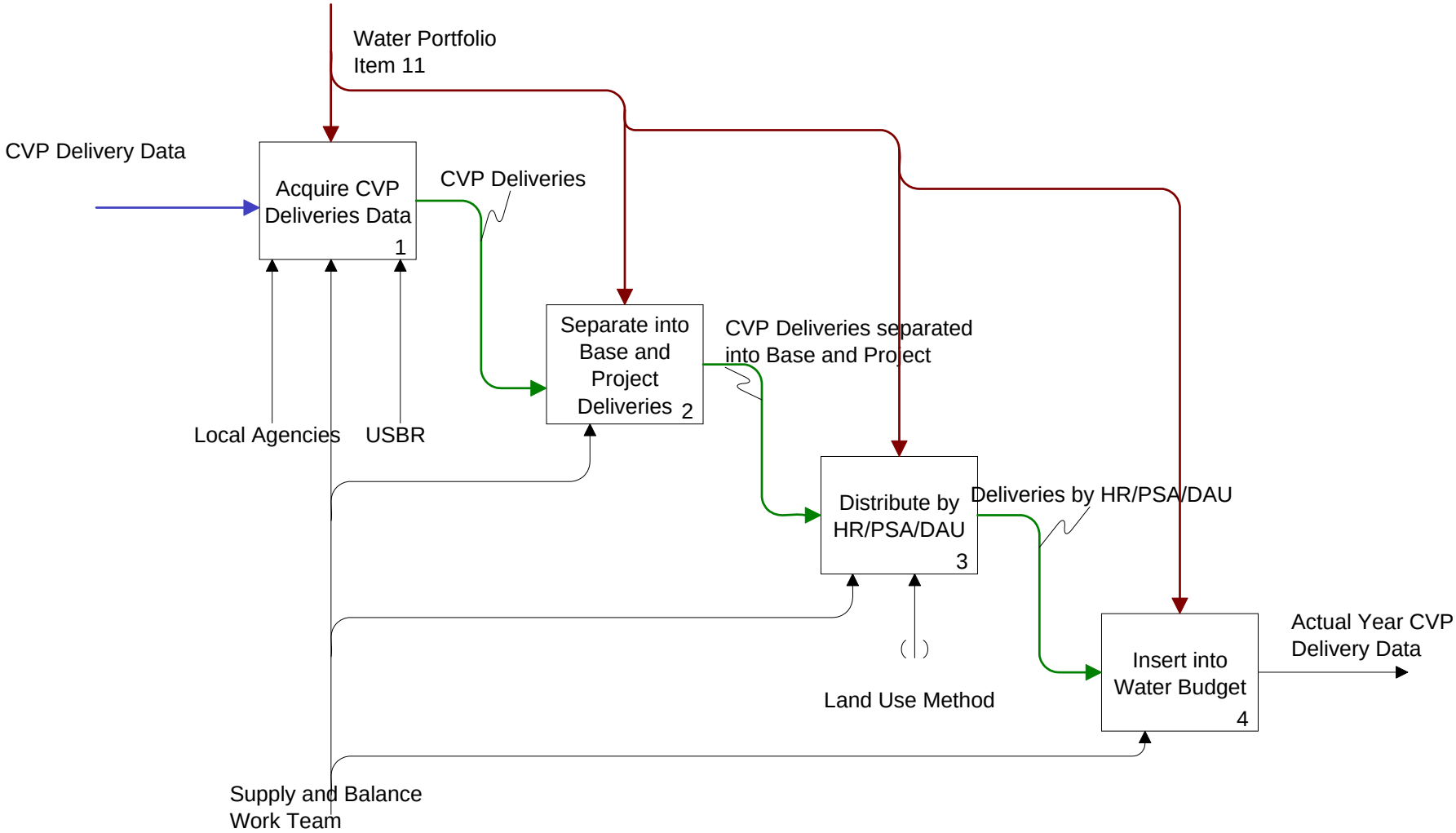

Node: A212	Title: Acquire CVP (Base & Project) Delivery Data	Number:
		Page: 11

Used At:	Author: Supply & Bal Workteam Date: 10/15/2001	WORKING	READER	DATE	CONTEXT:
	Project: Flow Diagram Rev: 10/3/2007	DRAFT			A21
	Notes: 1 2 3 4 5 6 7 8 9 10	RECOMMENDED			
		PUBLICATION			

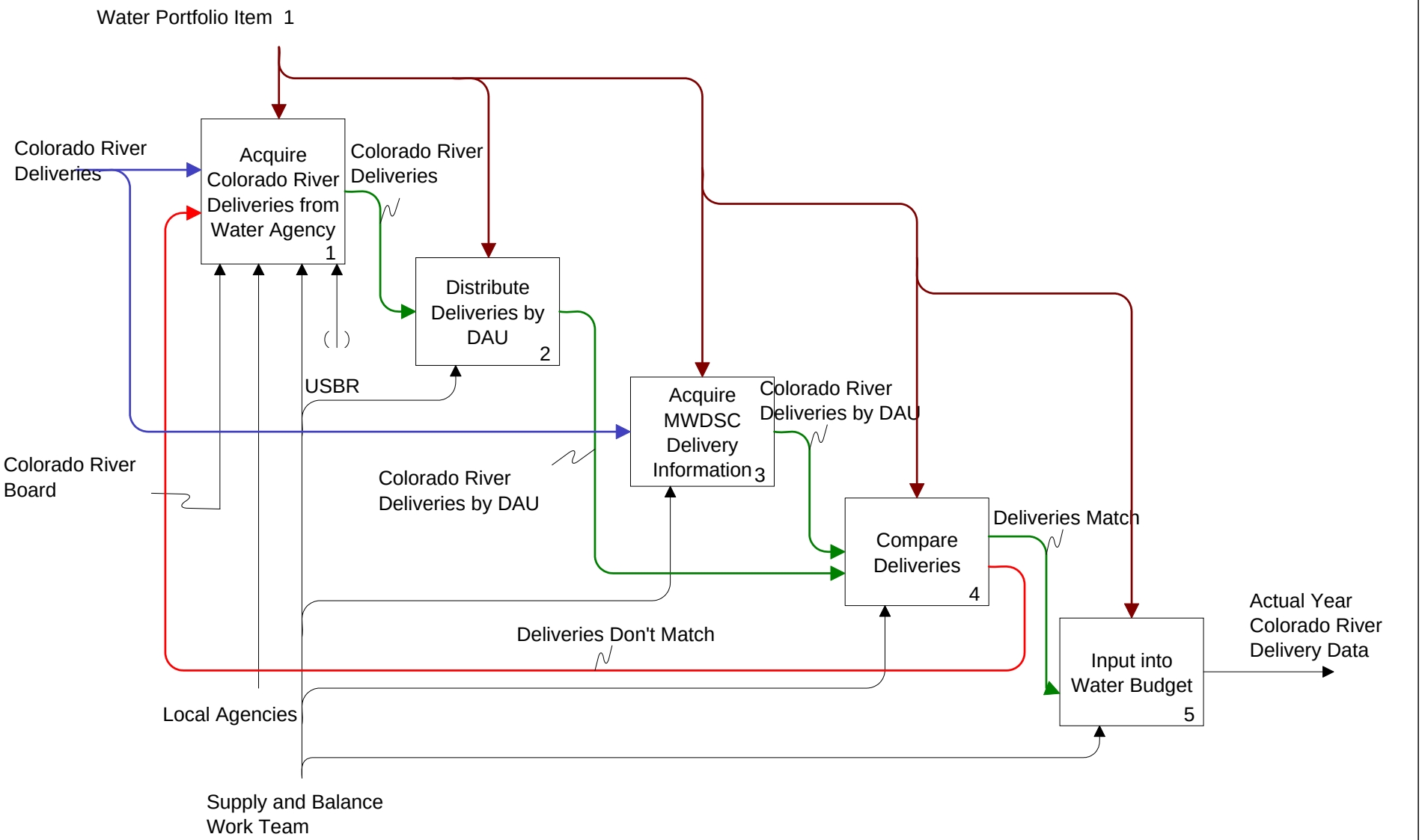

Node:	Title:	Number:
A213	Acquire Colorado River Delivery Data	

Acquire Colorado River Deliveries from Water Agency Water Agencies/Col.River contractors being:

Coachella Valley Water District
Imperial Irrigation District
Metropolitan Water District
Palo Verde Irrigation District
Palo Verde Irrigation District(mesa lands)
Yuma Project, California portion
(per B160-87, pg. 28)

Acquire MWDSC Delivery Information For South Coast Region Only

Used At:	Author: Supply & Bal Workteam Date: 10/15/2001 Project: Flow Diagram Rev: 10/3/2007 Notes: 1 2 3 4 5 6 7 8 9 10	WORKING	READER	DATE	CONTEXT:
		DRAFT			
		RECOMMENDED			
		PUBLICATION			A21

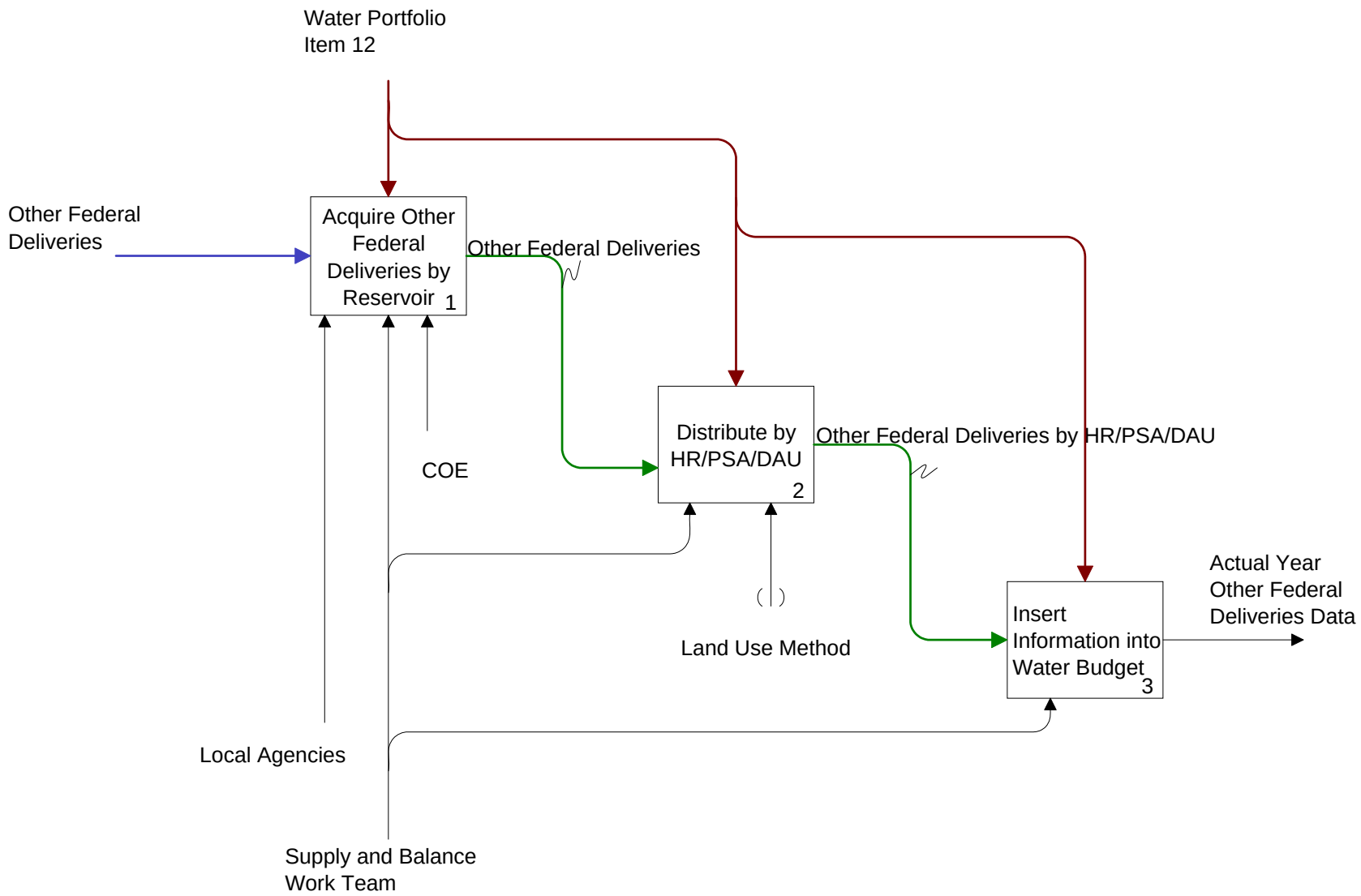

Node: A214	Title: Acquire Other Federal Deliveries Data	Number:
		Page: 14

Used At:	Author: Supply & Bal Workteam Date: 10/10/01 Project: Flow Diagram Rev: 10/3/2007 Notes: 1 2 3 4 5 6 7 8 9 10		WORKING	READER DATE	CONTEXT:
			DRAFT		
		■	RECOMMENDED		
			PUBLICATION		A2

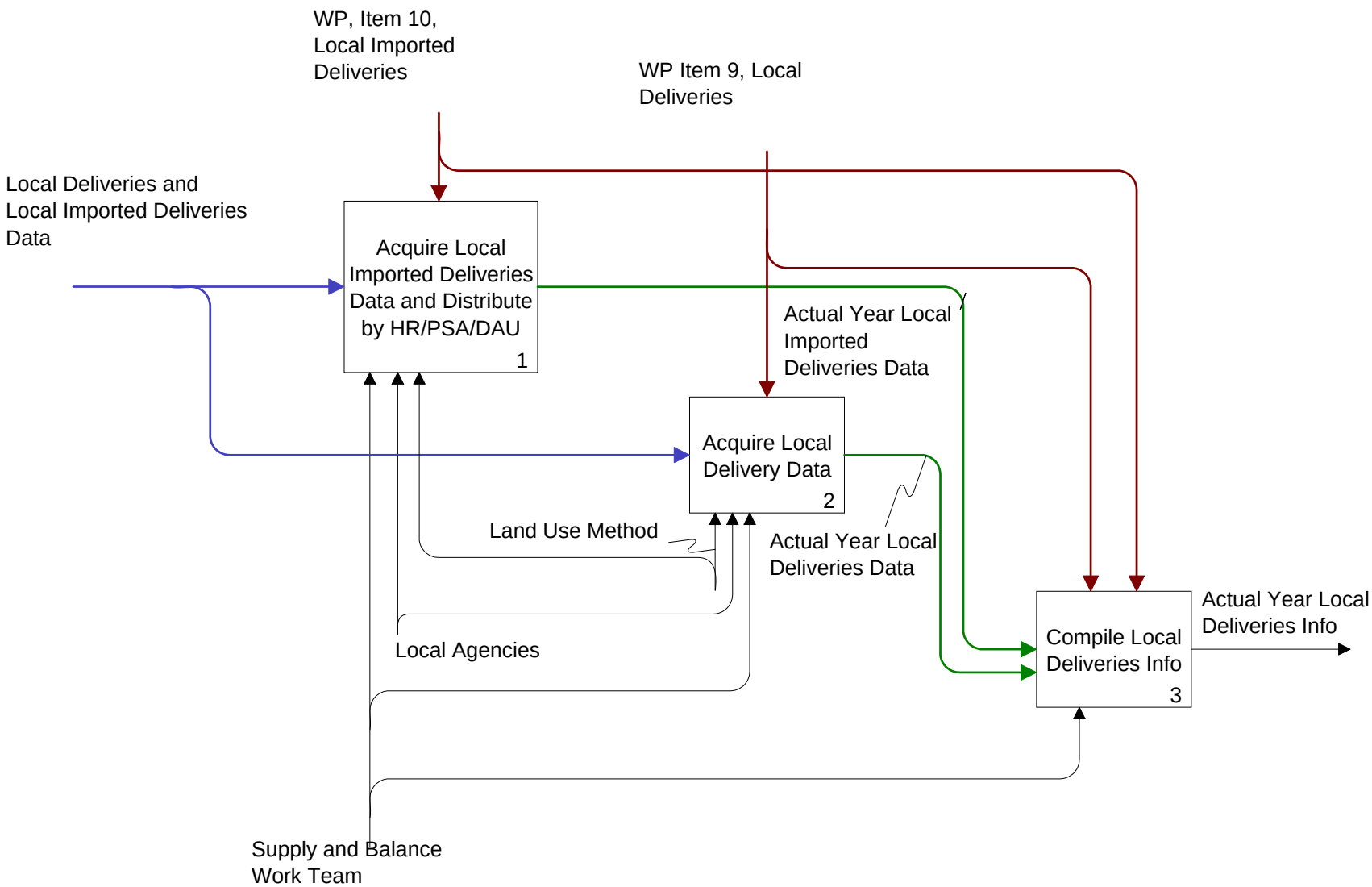

Node:	Title:	Number:
A24	Acquire Local Deliveries Information	

Used At:	Author: Supply & Bal Workteam Date: 10/10/01 Project: Flow Diagram Rev: 10/3/2007 Notes: 1 2 3 4 5 6 7 8 9 10		WORKING	READER DATE	CONTEXT:
			DRAFT		
			RECOMMENDED		
			PUBLICATION		A2

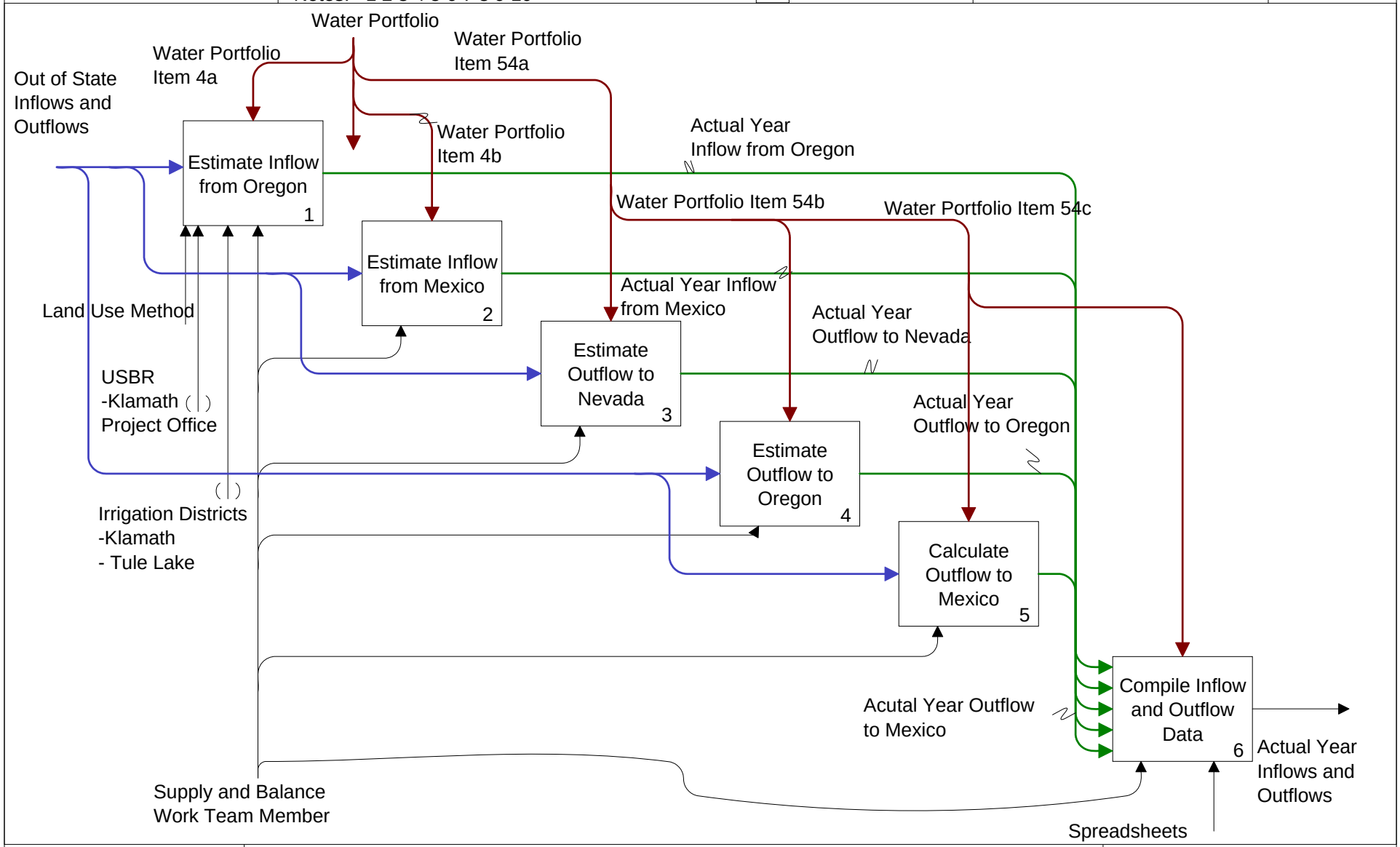

Node: A25	Title: Estimate Inflows and Outflows	Number:
		Page: 16

Used At:	Author: Supply & Bal Workteam Date: 10/10/01		WORKING	READER DATE	CONTEXT:
	Project: Flow Diagram Rev: 10/3/2007		DRAFT		
			RECOMMENDED		
	Notes: 1 2 3 4 5 6 7 8 9 10		PUBLICATION		A0

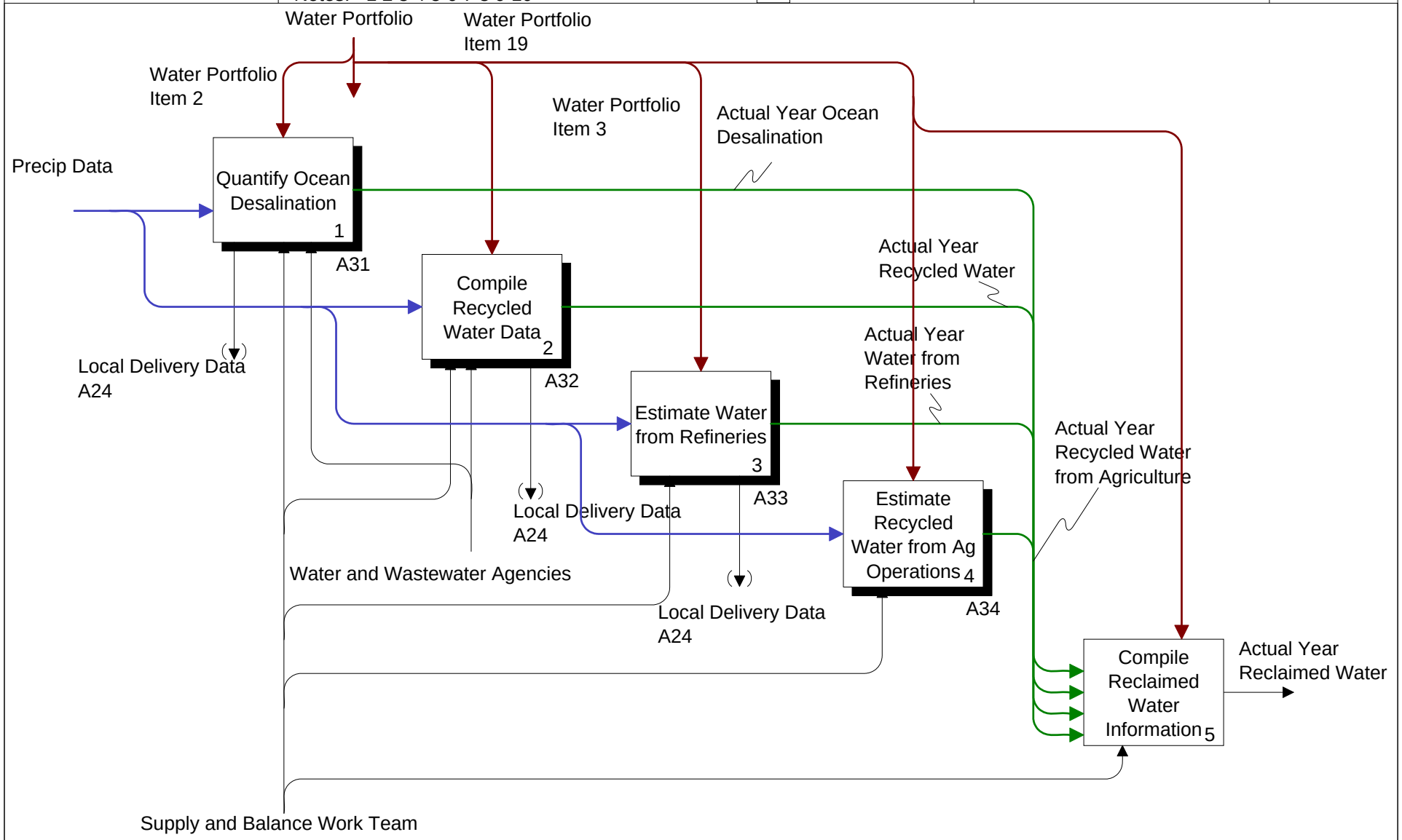

Node: A3	Title: Determine Recycled Water	Number:

Used At:	Author: Supply & Bal Workteam Date: 10/15/2001 Project: Flow Diagram Rev: 10/10/2007 Notes: 1 2 3 4 5 6 7 8 9 10	☐	WORKING	READER DATE	CONTEXT: A3
		■	DRAFT		
		☐	RECOMMENDED		
		☐	PUBLICATION		

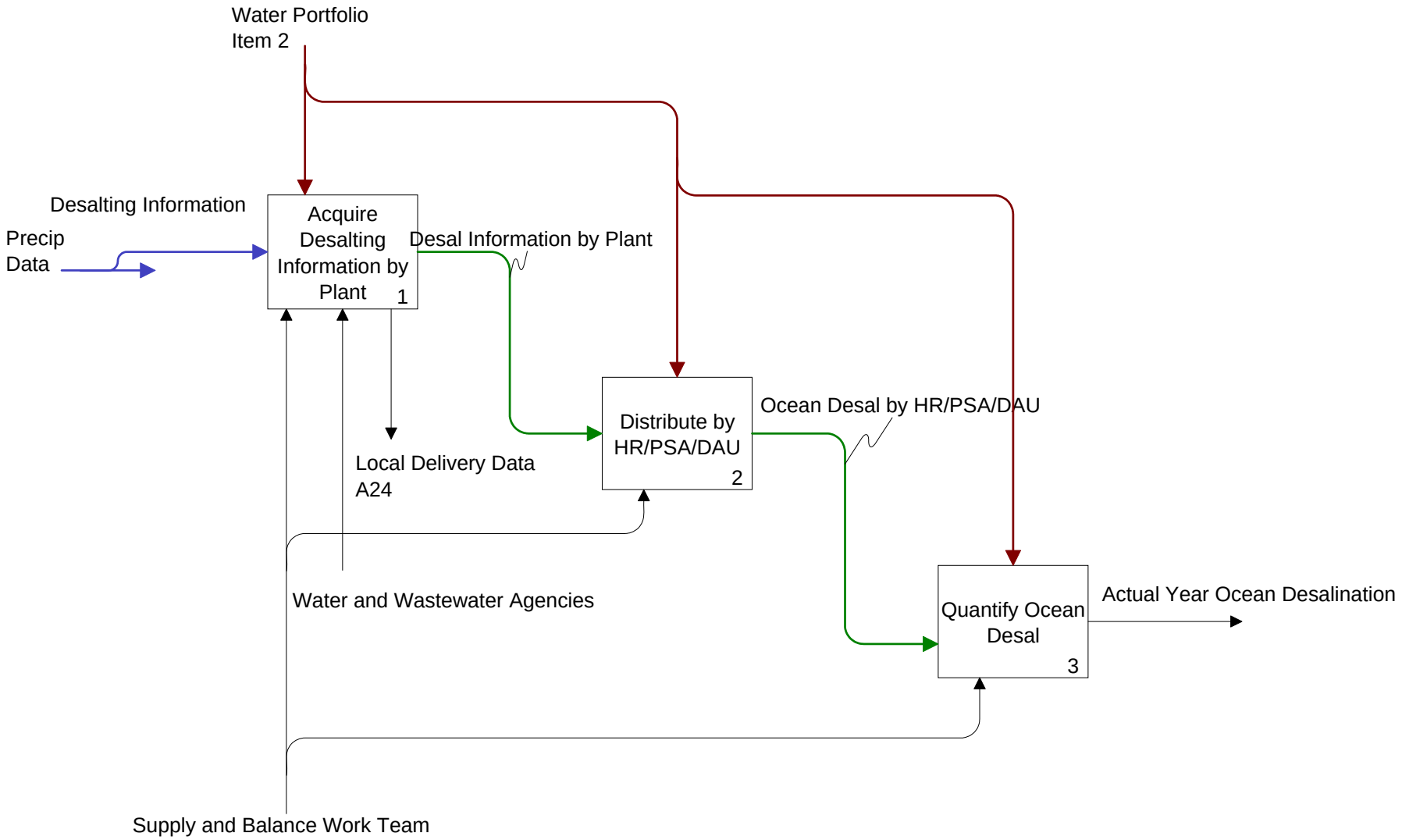

Node: A31	Title: Quantify Ocean Desalination	Number:

Used At:	Author: Supply & Bal Workteam Date: 10/15/2001 Project: Flow Diagram Rev: 10/10/2007 Notes: 1 2 3 4 5 6 7 8 9 10	WORKING DRAFT RECOMMENDED PUBLICATION	READER DATE	CONTEXT: A3	

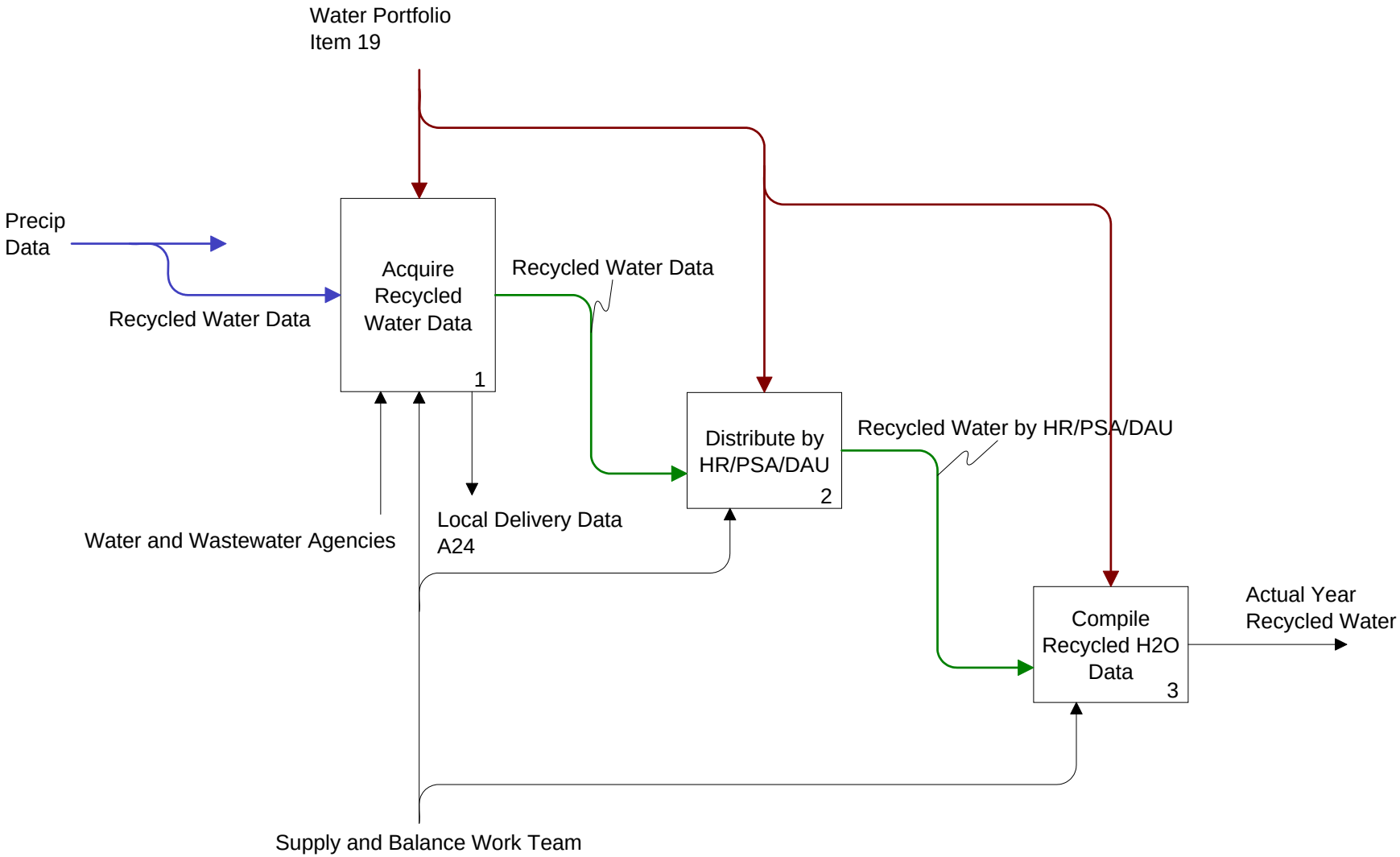

Node: A32	Title: Compile Recycled Water Data	Number:

Used At:	Author: Supply & Bal Workteam Date: 10/15/2001 Project: Flow Diagram Rev: 10/10/2007 Notes: 1 2 3 4 5 6 7 8 9 10	☐	WORKING	READER DATE	CONTEXT: A3
		☐	DRAFT		
		■	RECOMMENDED		
		☐	PUBLICATION		

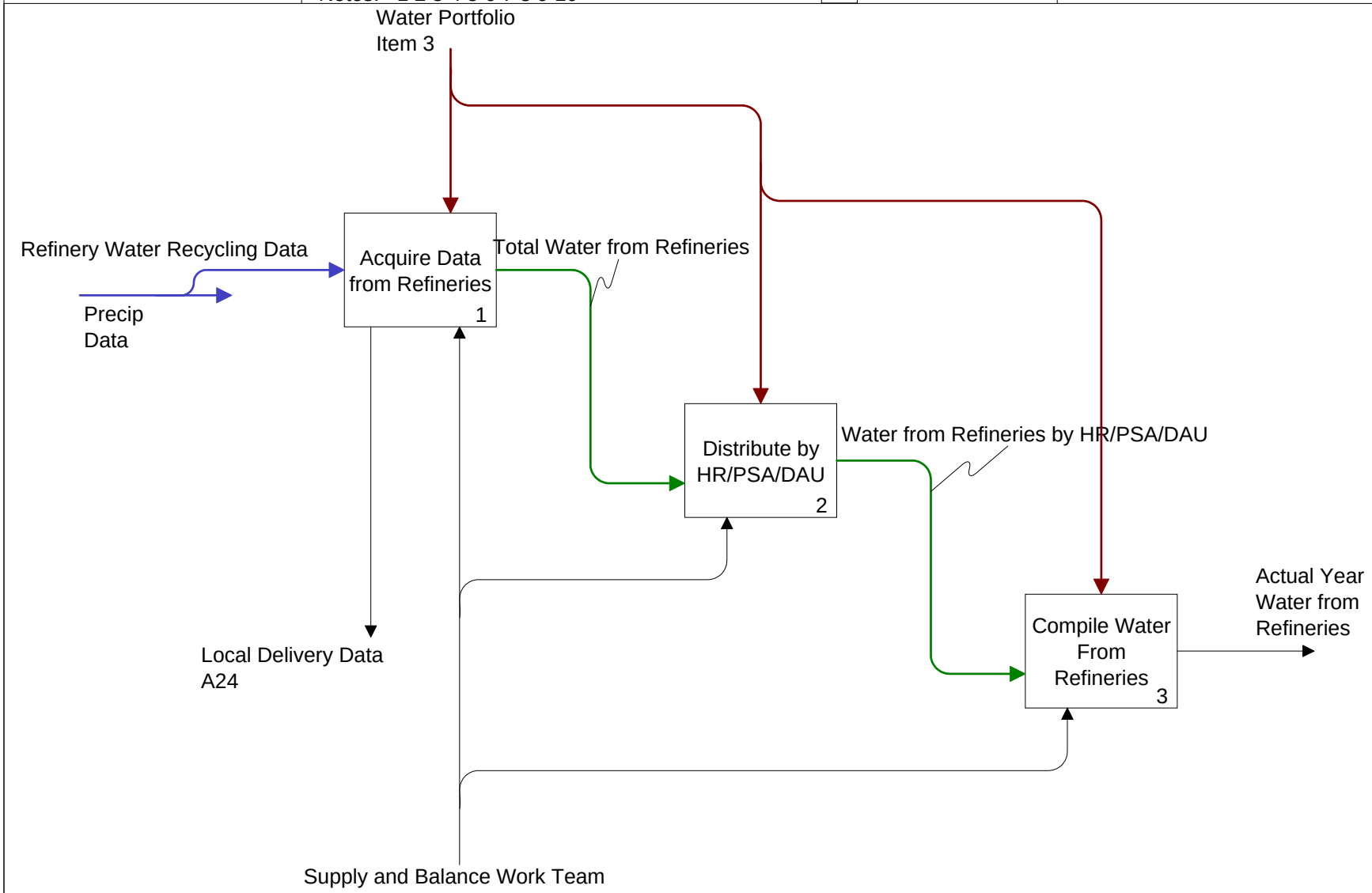

Node: A33	Title: Estimate Water from Refineries	Number:

Used At:	Author: Supply & Bal Workteam Date: 10/15/2001 Project: Flow Diagram Rev: 10/10/2007 Notes: 1 2 3 4 5 6 7 8 9 10		WORKING	READER DATE	CONTEXT:
			DRAFT		
		■	RECOMMENDED		
			PUBLICATION		A3

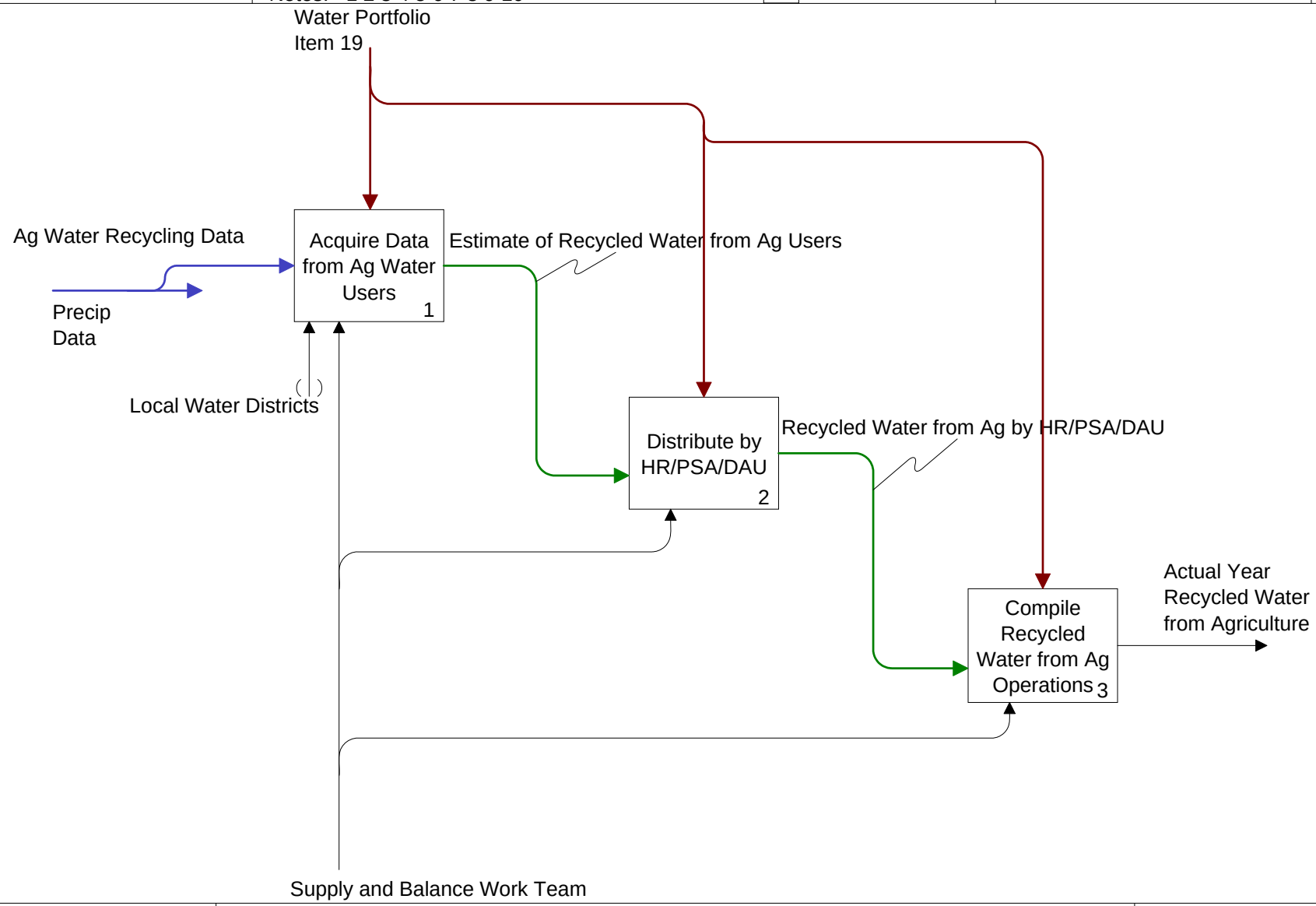

Node: A34	Title: Estimate Recycled Water from Ag Operations	Number:

Used At:	Author: Supply & Bal Team	Date: 10/10/01	WORKING	READER	DATE
	Project: Flow Diagram	Rev: 10/10/2007	DRAFT		
			RECOMMENDED		
	Notes: 1 2 3 4 5 6 7 8 9 10		PUBLICATION		

CONTEXT: A0

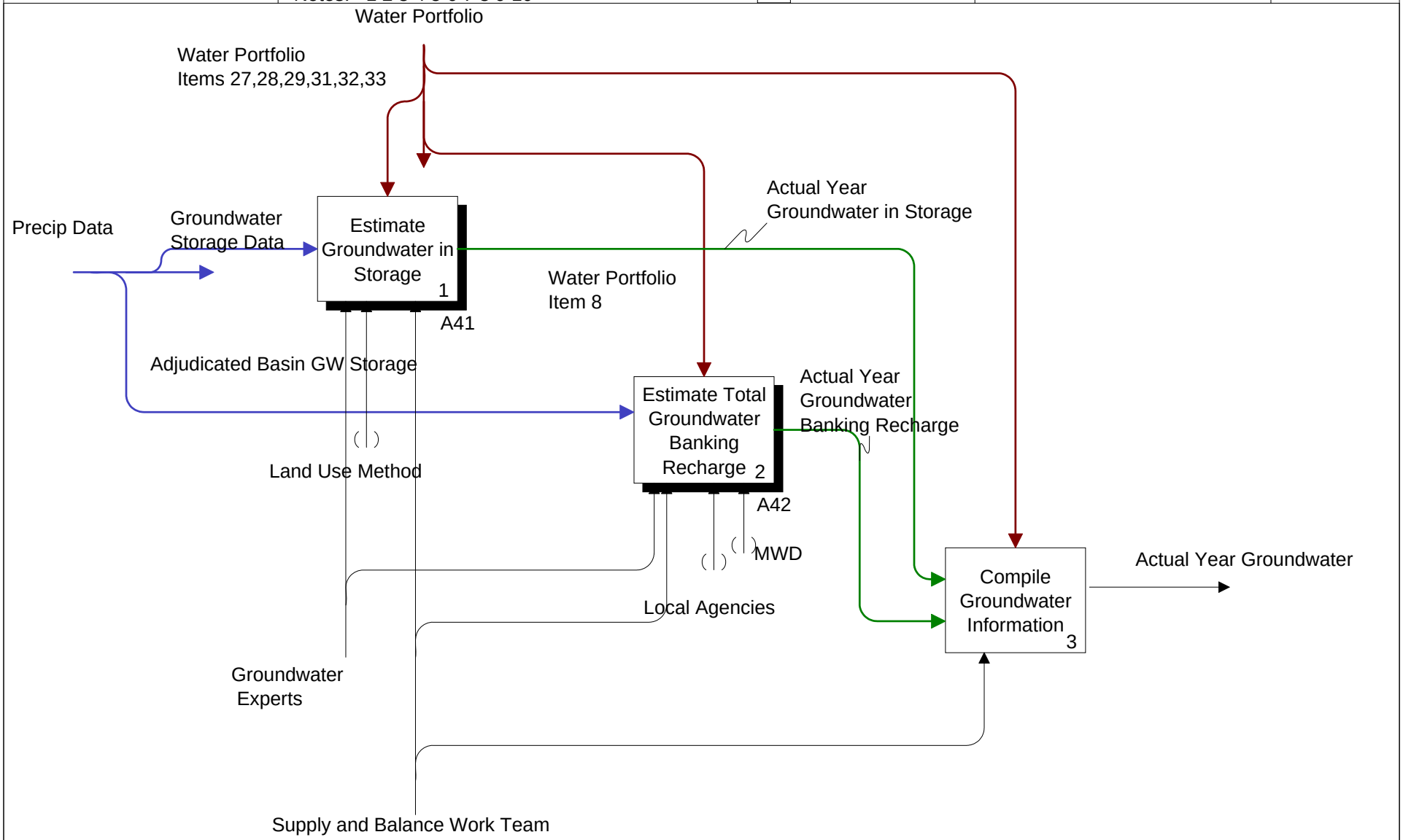

Node:	Title:	Number:
A4	Determine Groundwater	

Used At:	Author: Supply & Bal Workteam Date: 10/15/2001 Project: Flow Diagram Rev: 10/10/2007 Notes: 1 2 3 4 5 6 7 8 9 10	☐ WORKING ■ DRAFT ☐ RECOMMENDED ☐ PUBLICATION	READER DATE	CONTEXT: ☐ ■ ☐ A4	

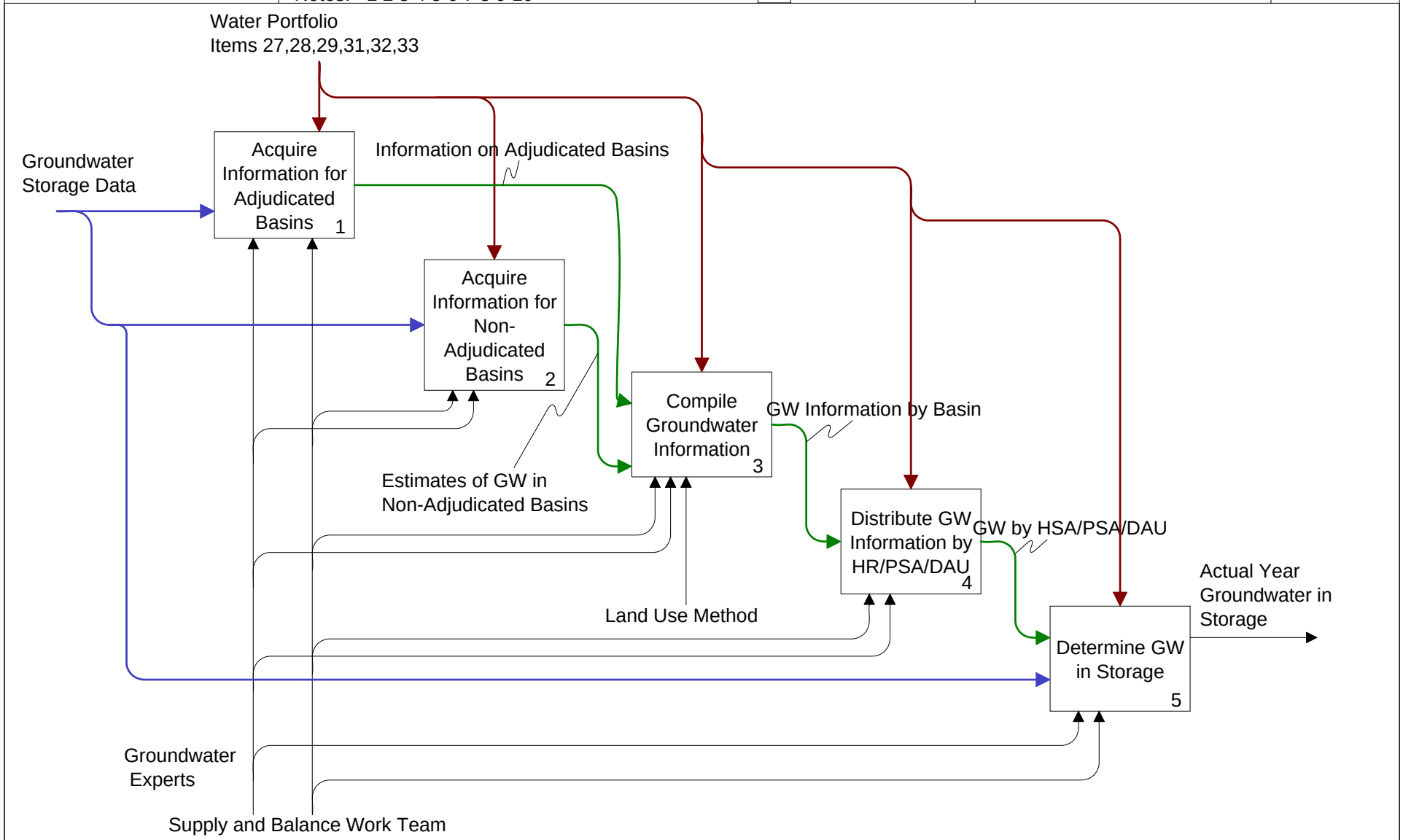

Node: A41	Title: Estimate Groundwater in Storage	Number:

Used At:	Author: Supply & Bal Workteam Date: 10/15/2001		WORKING	READER DATE	CONTEXT:
	Project: Flow Diagram Rev: 10/10/2007		DRAFT		
		■	RECOMMENDED		■
	Notes: 1 2 3 4 5 6 7 8 9 10		PUBLICATION		A4

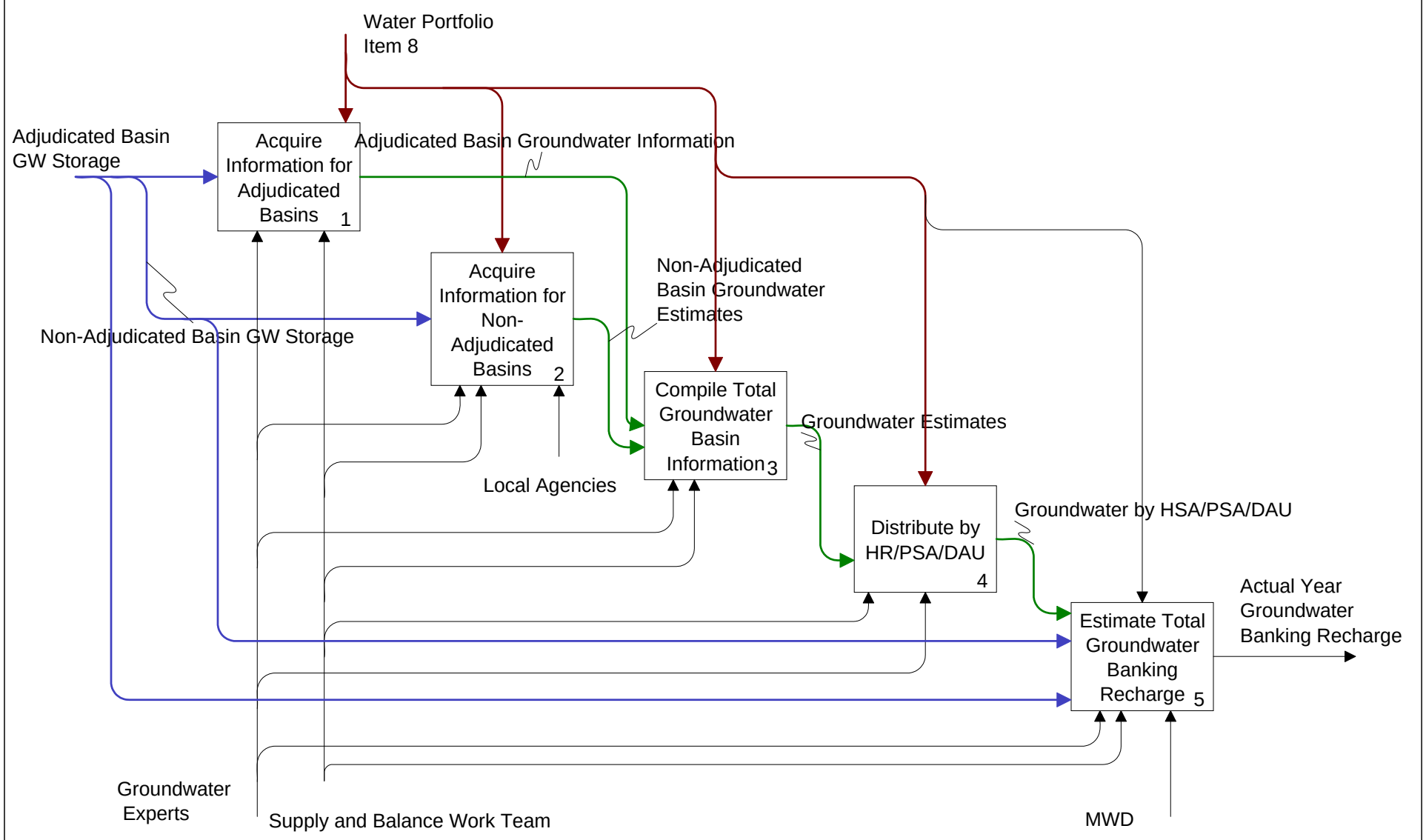

Node: A42	Title: Estimate Total Groundwater Banking Recharge	Number:

Used At:	Author: Supply & Bal Workteam Date: 10/19/2001 Project: Flow Diagram Rev: 10/10/2007 Notes: 1 2 3 4 5 6 7 8 9 10		WORKING	READER DATE	CONTEXT:
			DRAFT		
		■	RECOMMENDED		
			PUBLICATION		A0

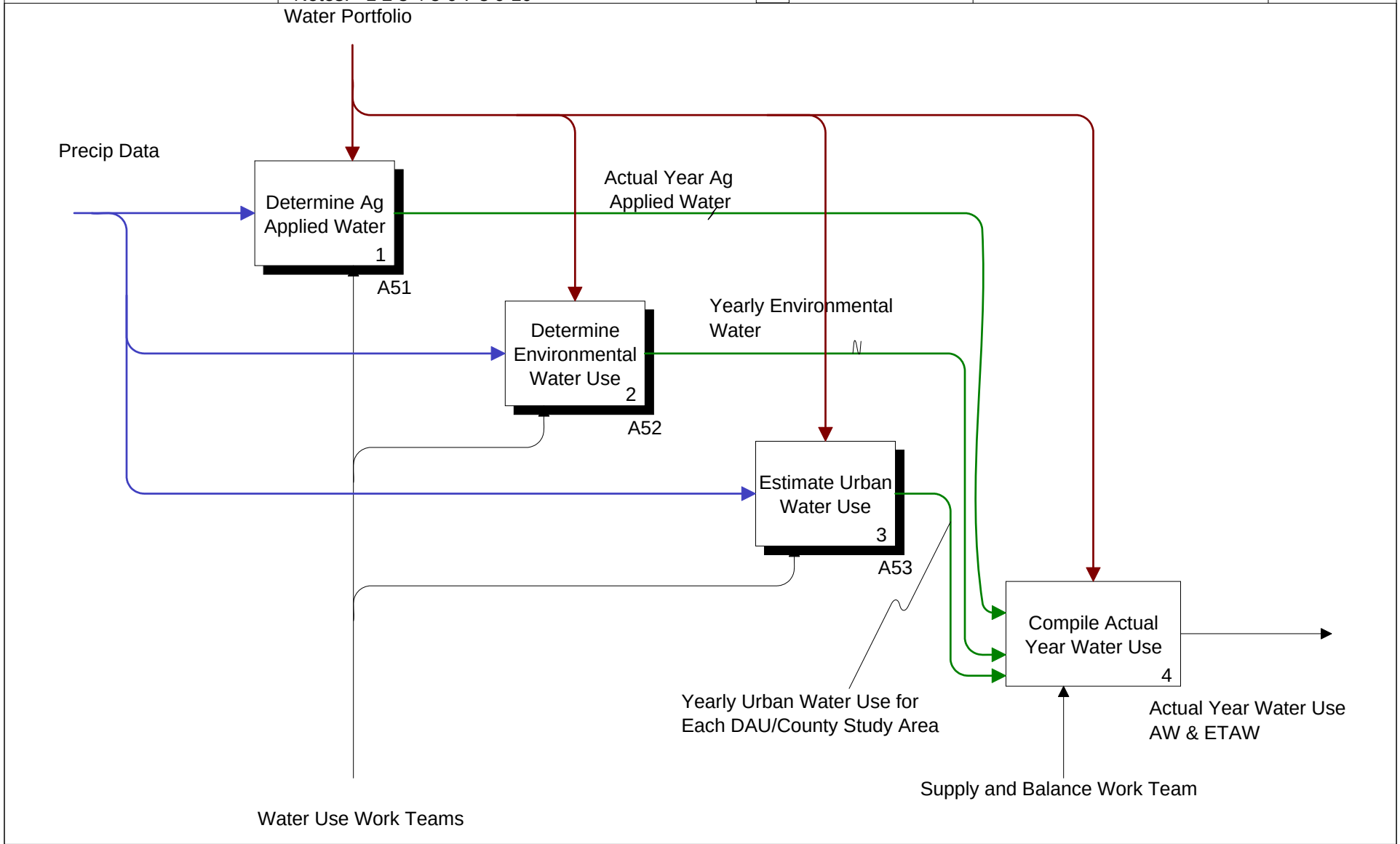

Node: A5	Title: Compile Water Use	Number:

Used At:	Author: Tipton/Kofoid	Date: 10/1/2001	WORKING	READER	DATE
	Project: Flow Diagram	Rev: 10/10/2007	DRAFT		
			RECOMMENDED		
	Notes: 1 2 3 4 5 6 7 8 9 10		PUBLICATION		

CONTEXT:

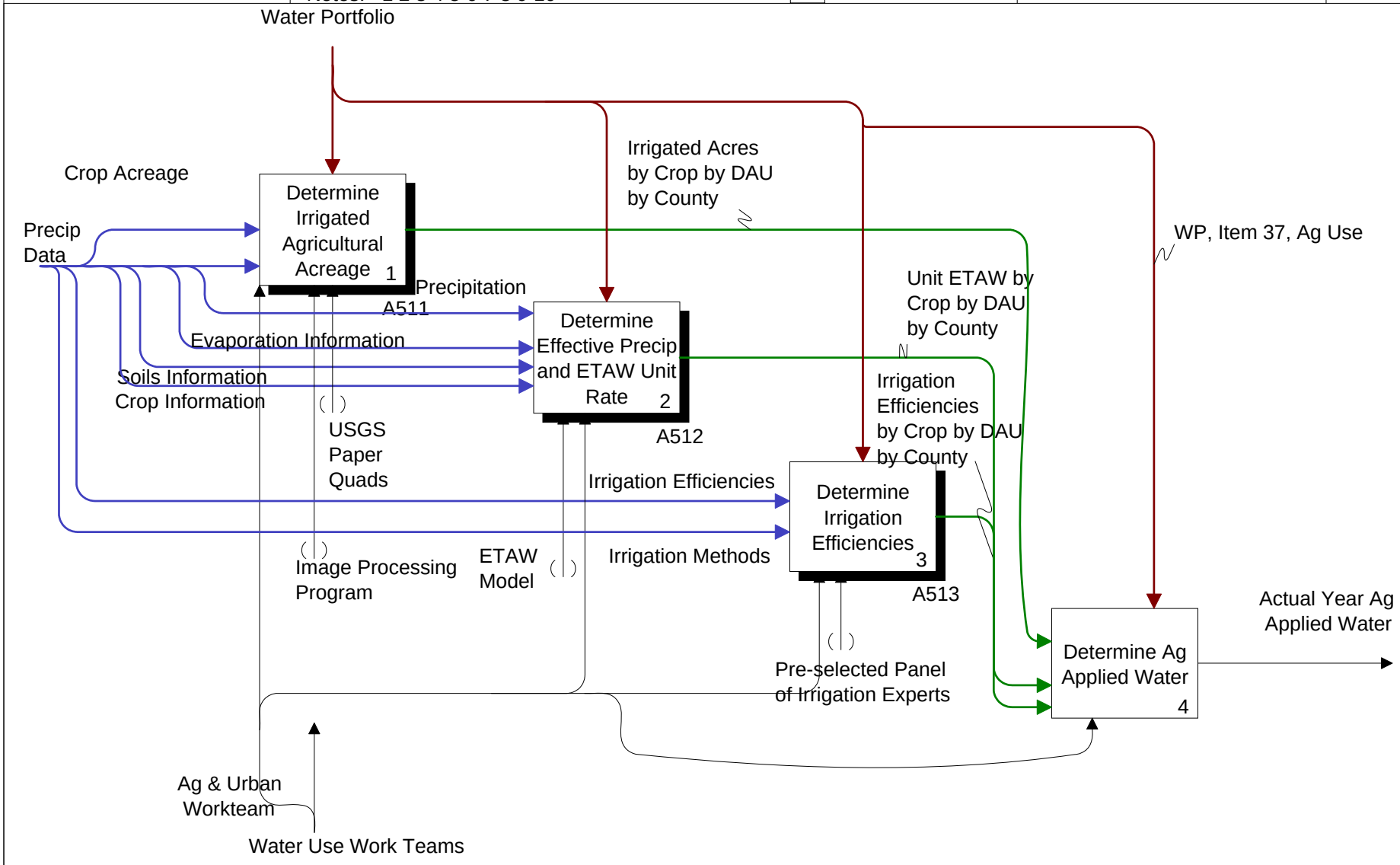

Node:	Title:	Number:
A51	Determine Ag Applied Water	

Used At:	Author: Ag& Urban Workteam	Date: 10/1/2001	WORKING	READER	DATE
	Project: Flow Diagram	Rev: 10/10/2007	DRAFT		
	Notes: 1 2 3 4 5 6 7 8 9 10		RECOMMENDED		
			PUBLICATION		

CONTEXT:

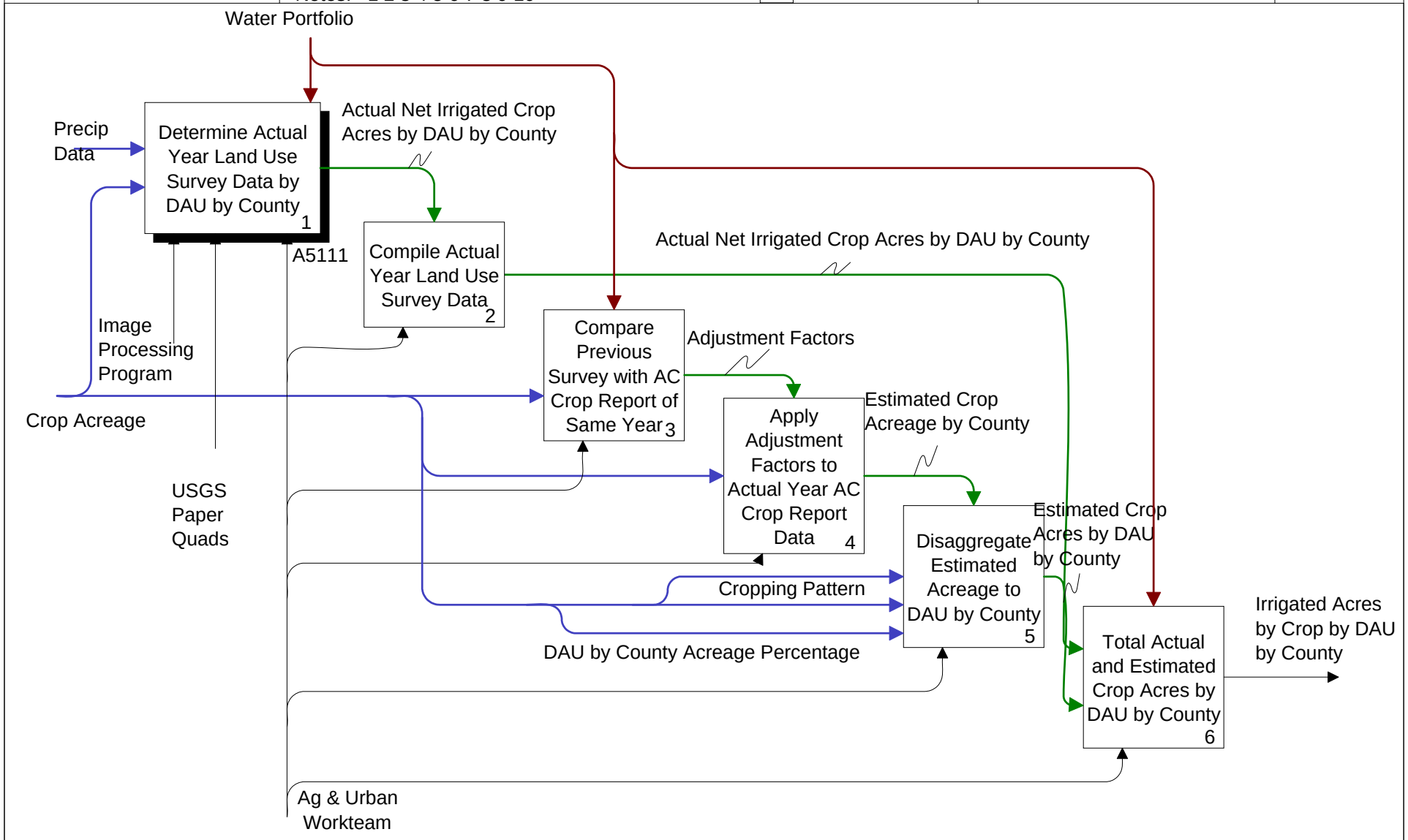

Node:	Title:	Number:
A511	Determine Irrigated Agricultural Acreage	

Used At:	Author: Ag & Urban Workteam	Date: 11/6/2001	WORKING	READER	DATE
	Project: Flow Diagram	Rev: 10/11/2007	DRAFT		
	Notes: 1 2 3 4 5 6 7 8 9 10		RECOMMENDED		
			PUBLICATION		

CONTEXT:

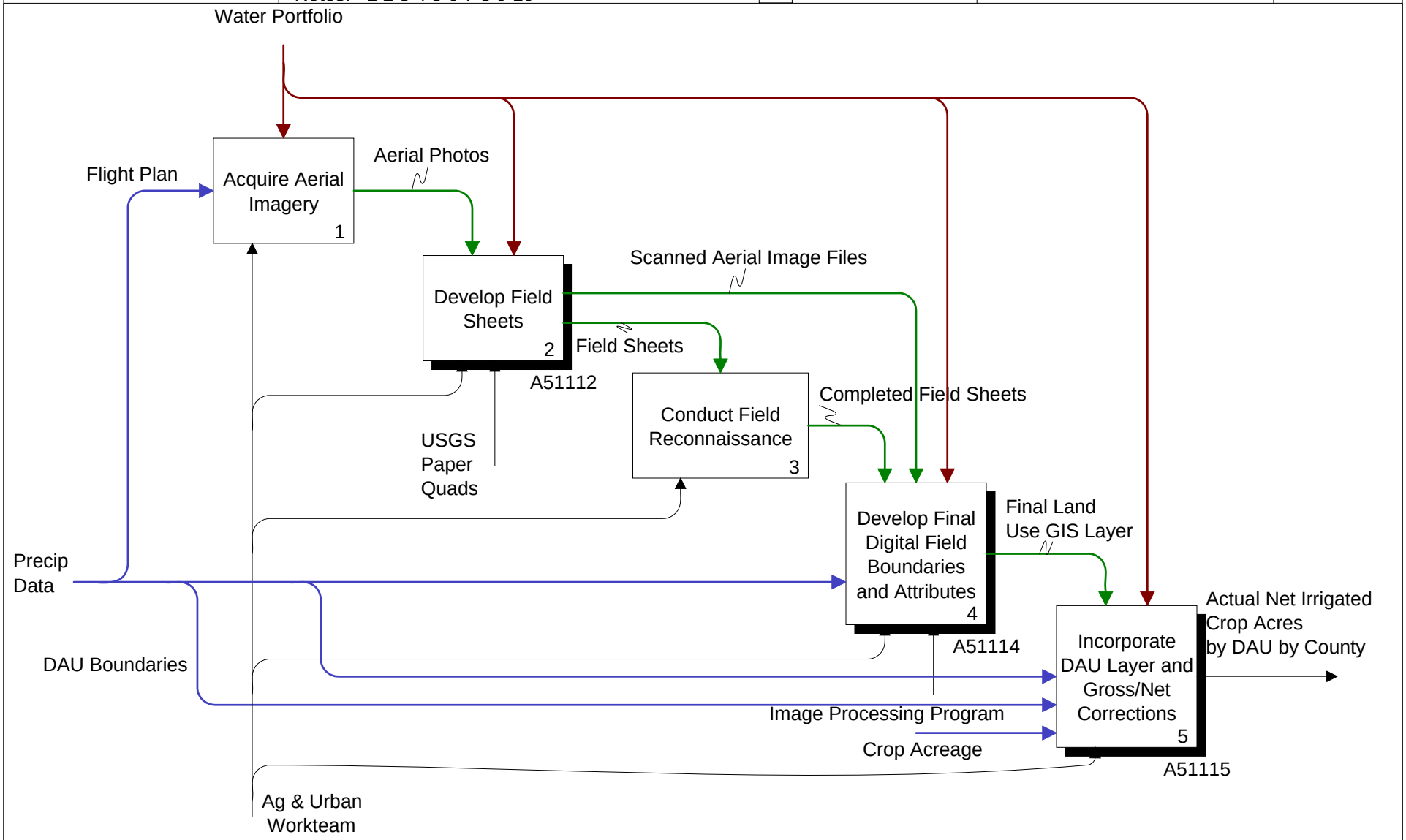

Node:	Title:	Number:
A5111	Determine Actual Year Land Use Survey Data by DAU by County	

Used At:	Author: Ag & Urban Workteam	Date: 11/6/2001	WORKING	READER	DATE
	Project: Flow Diagram	Rev: 10/11/2007	DRAFT		
	Notes: 1 2 3 4 5 6 7 8 9 10		RECOMMENDED		
			PUBLICATION		

CONTEXT:

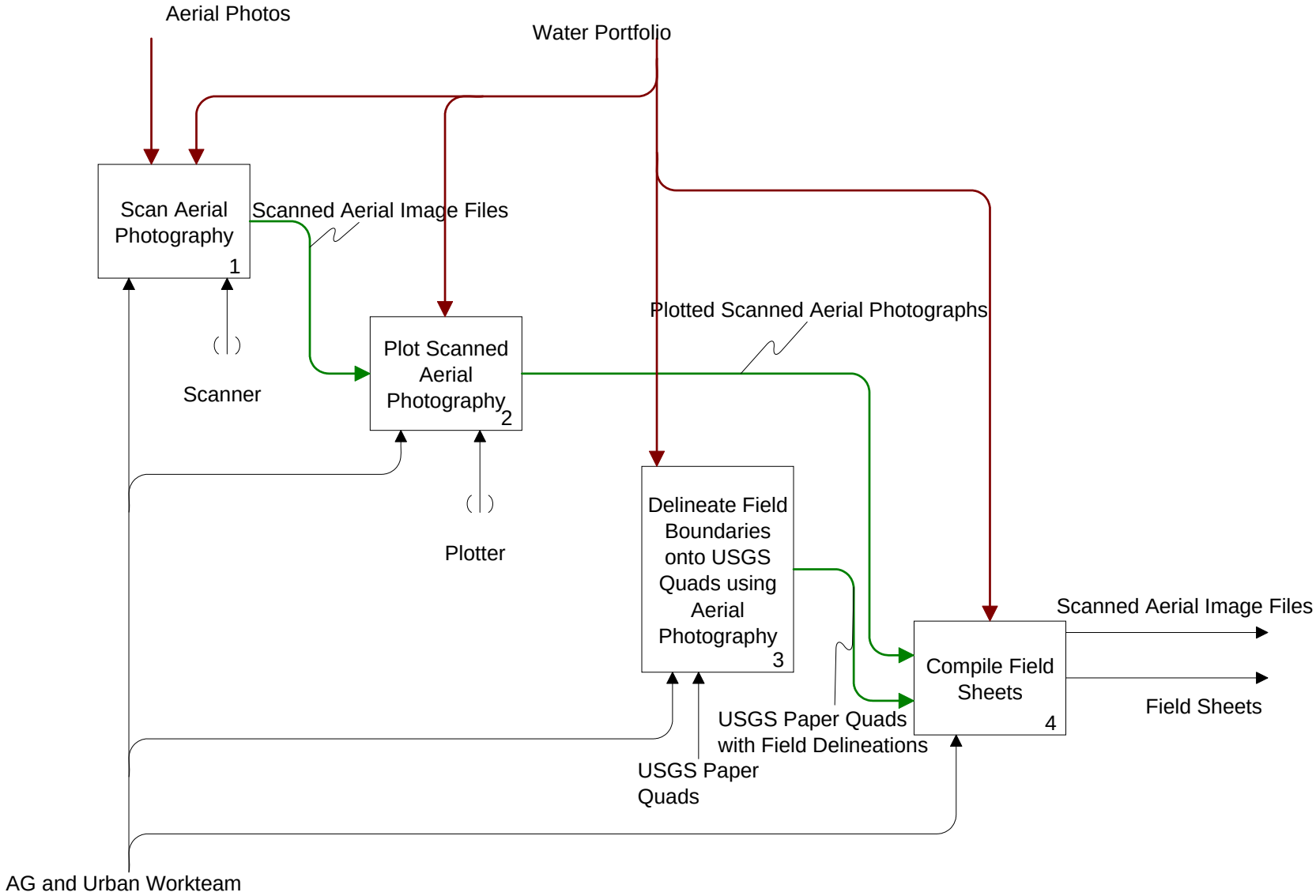

Node:	Title:	Number:
A51112	Develop Field Sheets	

Used At:	Author: Ag & Urban Workteam	Date: 11/6/2001	WORKING	READER	DATE
	Project: Flow Diagram	Rev: 10/11/2007	DRAFT		
	Notes: 1 2 3 4 5 6 7 8 9 10		RECOMMENDED		
			PUBLICATION		

CONTEXT:

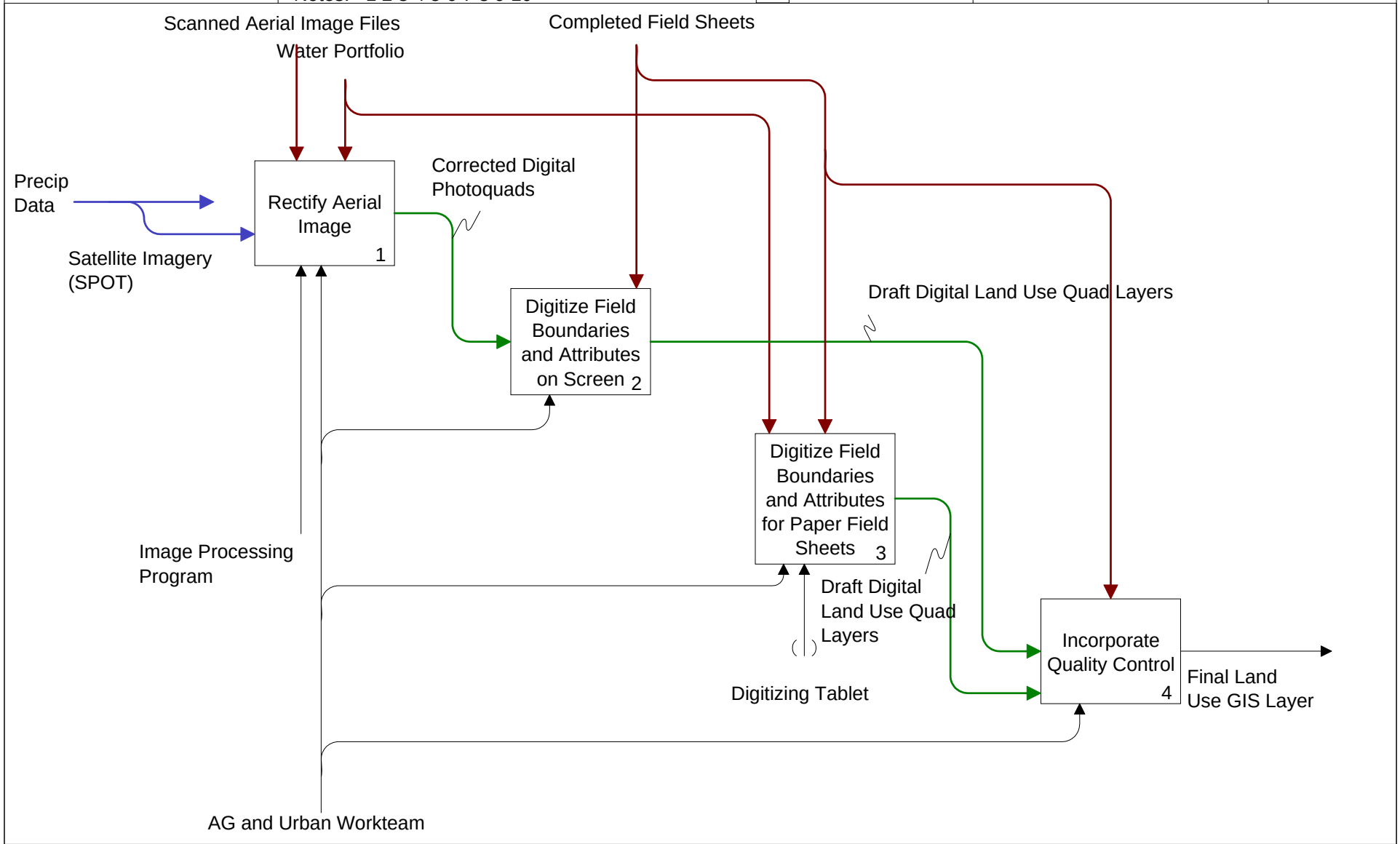

Node:	Title:	Number:
A51114	Develop Final Digital Field Boundaries and Attributes	

Used At:	Author: Ag & Urban Workteam	Date: 11/6/2001	WORKING	READER	DATE
	Project: Flow Diagram	Rev: 10/11/2007	DRAFT		
	Notes: 1 2 3 4 5 6 7 8 9 10		RECOMMENDED		
			PUBLICATION		

CONTEXT:

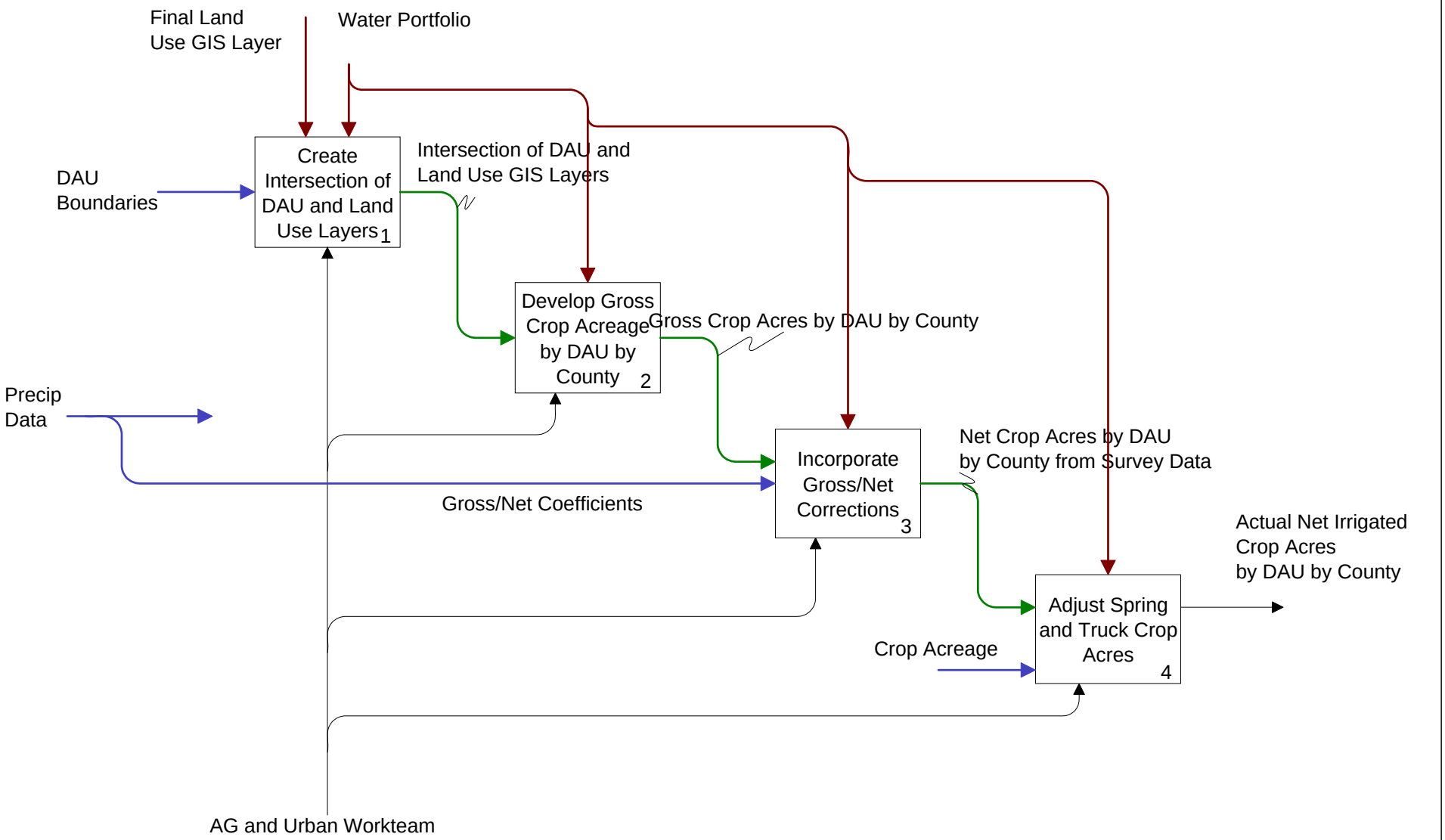

Node:	Title:	Number:
A51115	Incorporate DAU Layer and Gross/Net Corrections	

Used At:	Author: Water Use Workteam	Date: 10/4/2001	WORKING	READER	DATE
	Project: Flow Diagram	Rev: 10/11/2007	DRAFT		
	Notes: 1 2 3 4 5 6 7 8 9 10		RECOMMENDED		
			PUBLICATION		

CONTEXT:

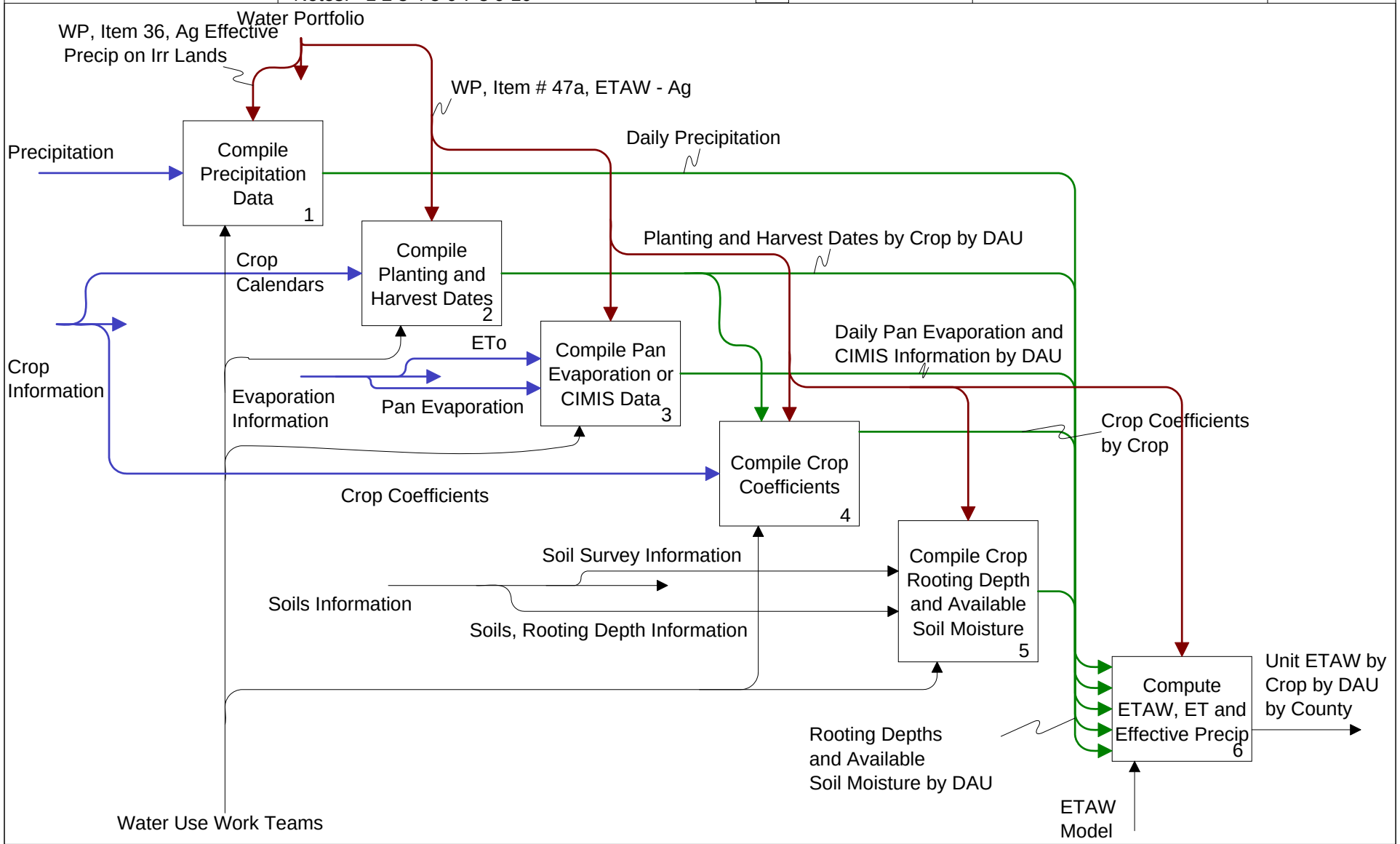

Node:	Title:	Number:
A512	Determine Effective Precip and ETAW Unit Rate	

Used At:	Author: Ag & Urban Workteam	Date: 10/4/2001	WORKING	READER	DATE
	Project: Flow Diagram	Rev: 10/11/2007	DRAFT		
	Notes: 1 2 3 4 5 6 7 8 9 10		RECOMMENDED		
			PUBLICATION		

CONTEXT:

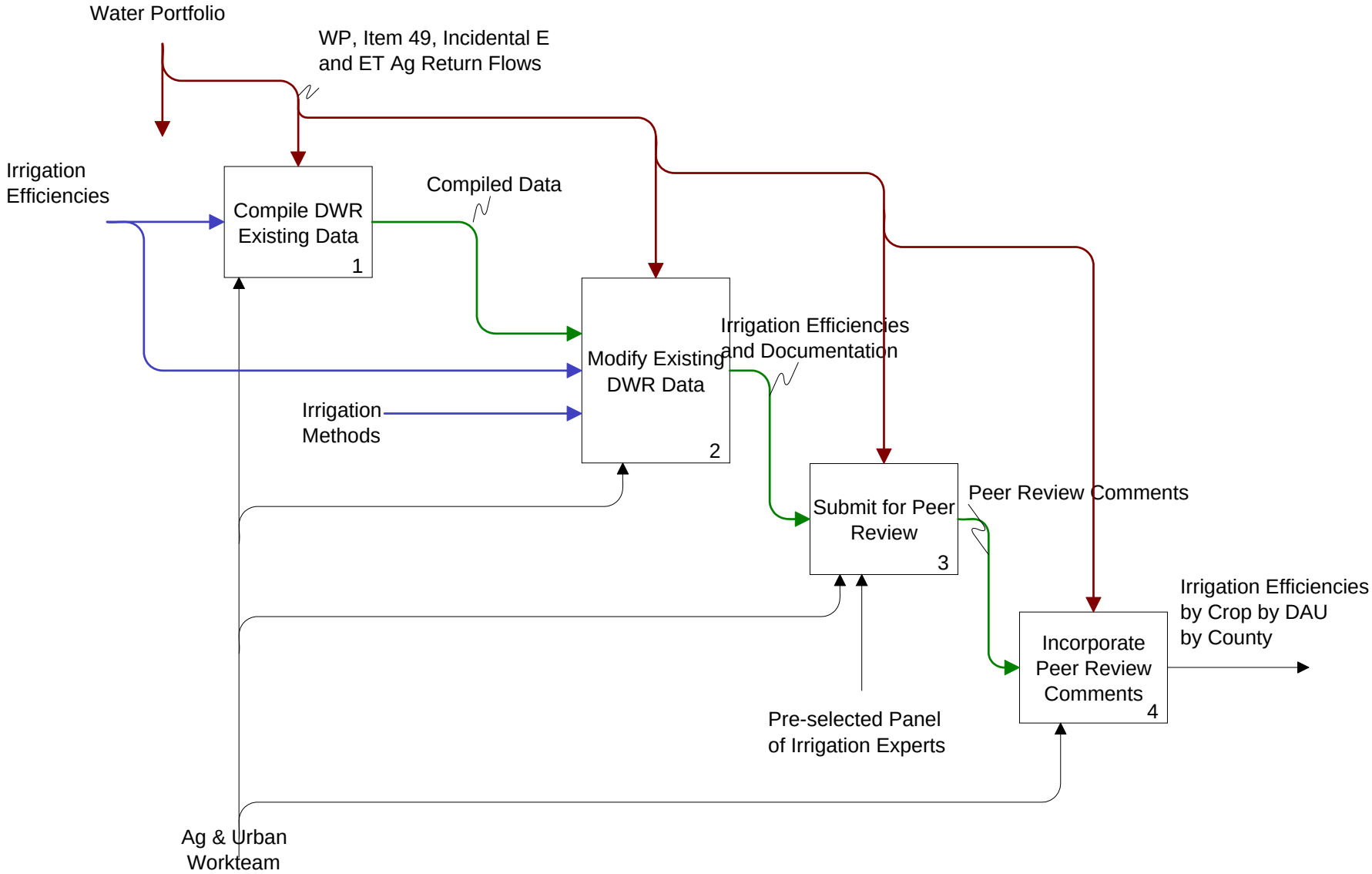

Node:	Title:	Number:
A513	Determine Irrigation Efficiencies	

Used At:	Author: Water Use Workteam	Date: 10/10/2001	WORKING	READER	DATE
	Project: Flow Diagram	Rev: 10/11/2007	DRAFT		
	Notes: 1 2 3 4 5 6 7 8 9 10		RECOMMENDED		
			PUBLICATION		

CONTEXT:

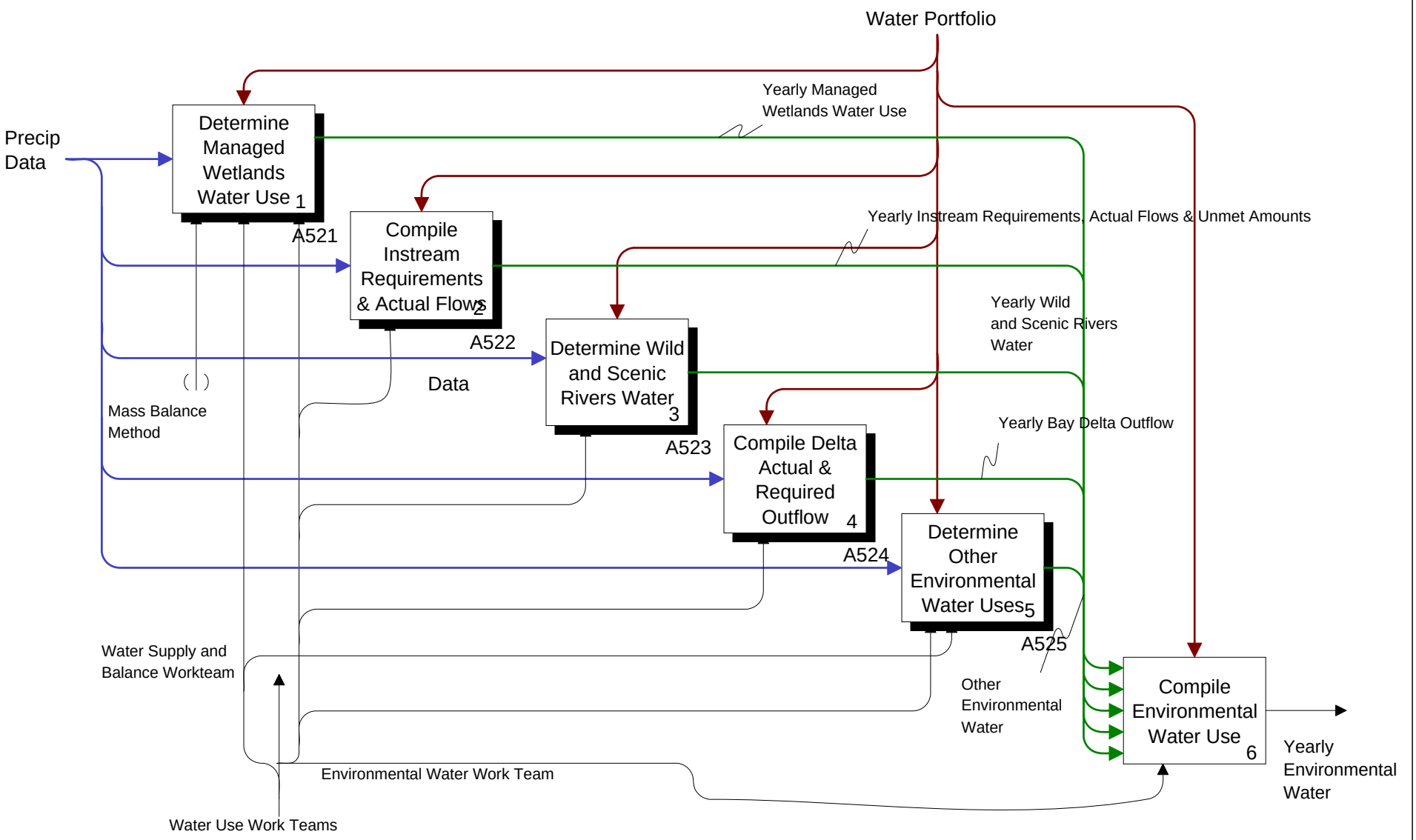

Node:	Title:	Number:
A52	Determine Environmental Water Use	

Used At:	Author: Env Water Workteam	Date: 10/10/2001	WORKING	READER	DATE
	Project: Flow Diagram	Rev: 10/11/2007	DRAFT		
	Notes: 1 2 3 4 5 6 7 8 9 10		RECOMMENDED		
			PUBLICATION		

CONTEXT:

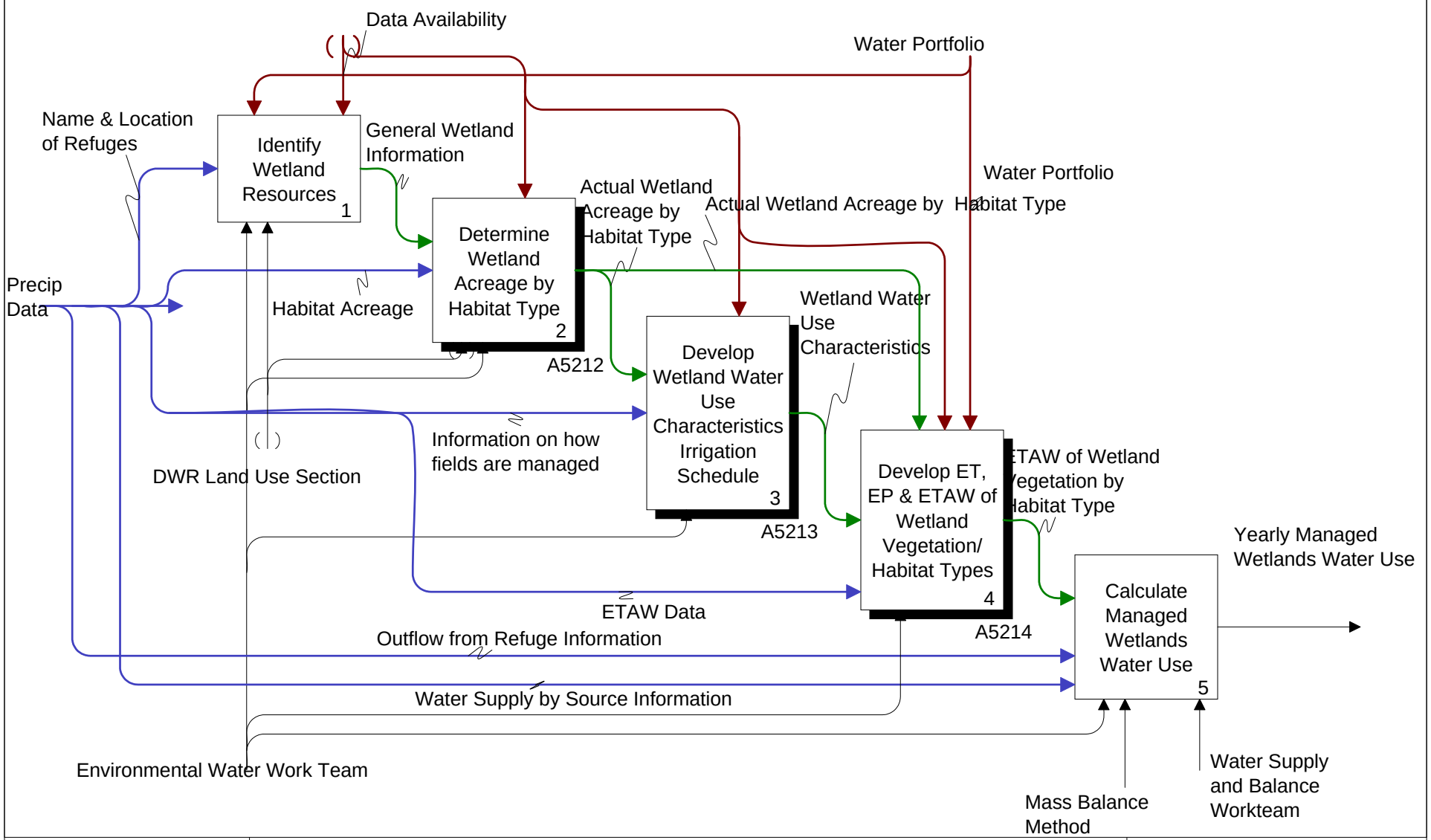

Node:	Title:	Number:
A521	Determine Managed Wetlands Water Use	

Used At:	Author: Env Workteam	Date: 10/10/2001	WORKING	READER	DATE
	Project: Flow Diagram	Rev: 10/11/2007	DRAFT		
			RECOMMENDED		
	Notes: 1 2 3 4 5 6 7 8 9 10		PUBLICATION		

CONTEXT:

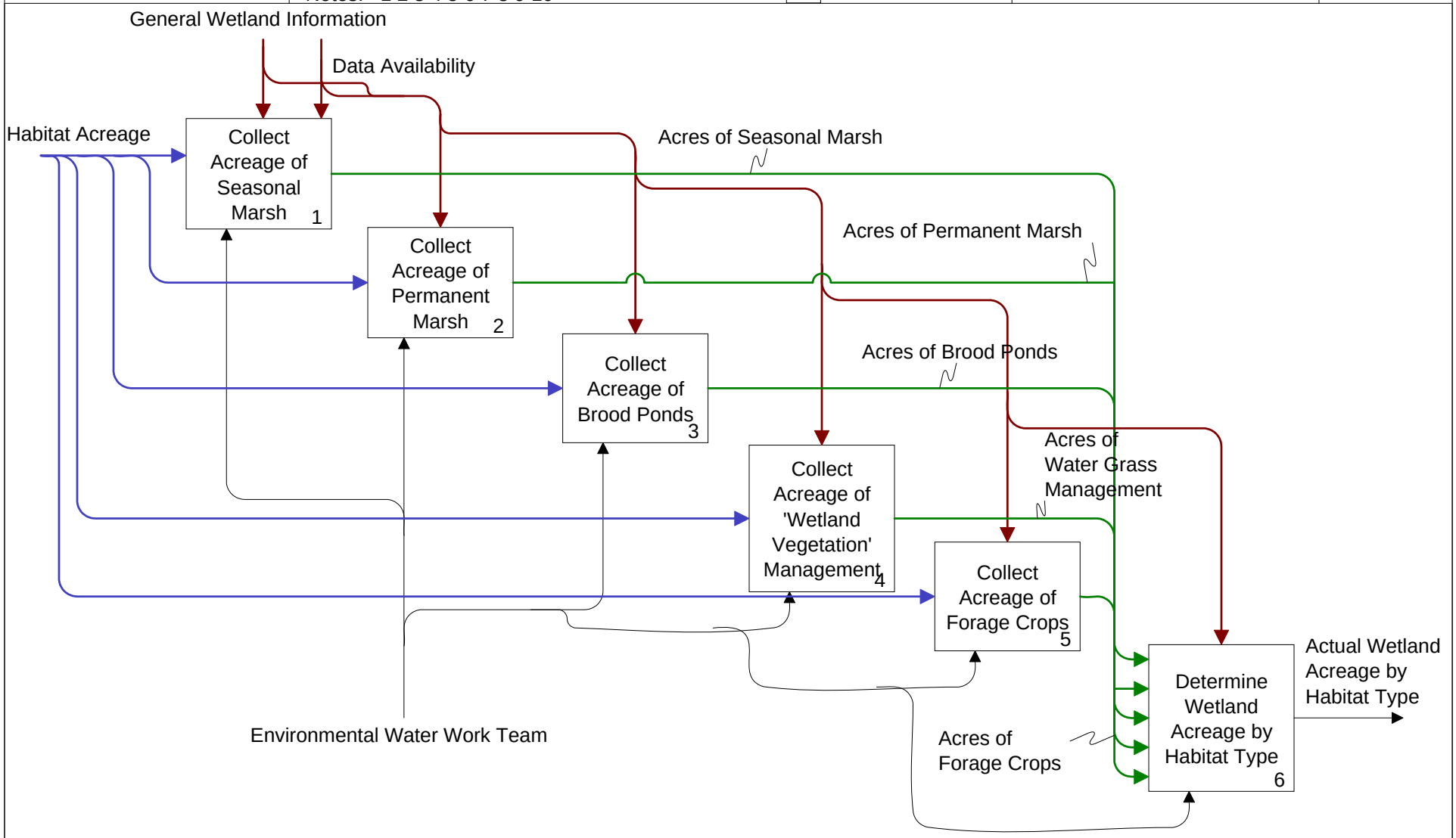

Node:	Title:	Number:
A5212	Determine Wetland Acreage by Habitat Type	

Used At:	Author: Env Workteam	Date: 10/10/2001	WORKING	READER	DATE
	Project: Flow Diagram	Rev: 10/11/2007	DRAFT		
			RECOMMENDED		
	Notes: 1 2 3 4 5 6 7 8 9 10		PUBLICATION		

CONTEXT:

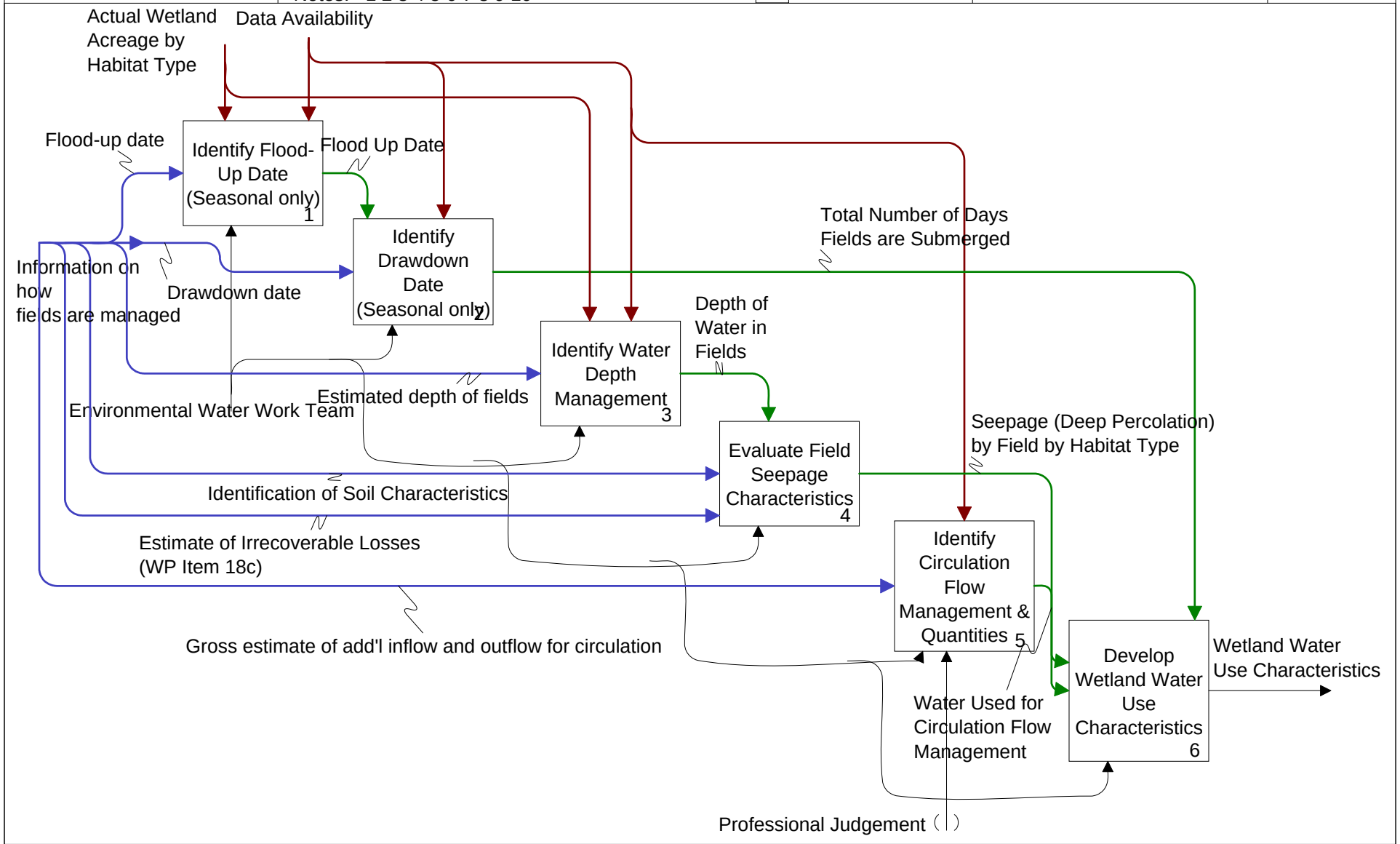

Node:	Title:	Number:
A5213	Develop Wetland Water Use Characteristics Irrigation Schedule	

Used At:	Author: Env Workteam	Date: 10/11/2001	WORKING	READER	DATE
	Project: Flow Diagram	Rev: 10/11/2007	DRAFT		
			RECOMMENDED		
	Notes: 1 2 3 4 5 6 7 8 9 10		PUBLICATION		

CONTEXT:

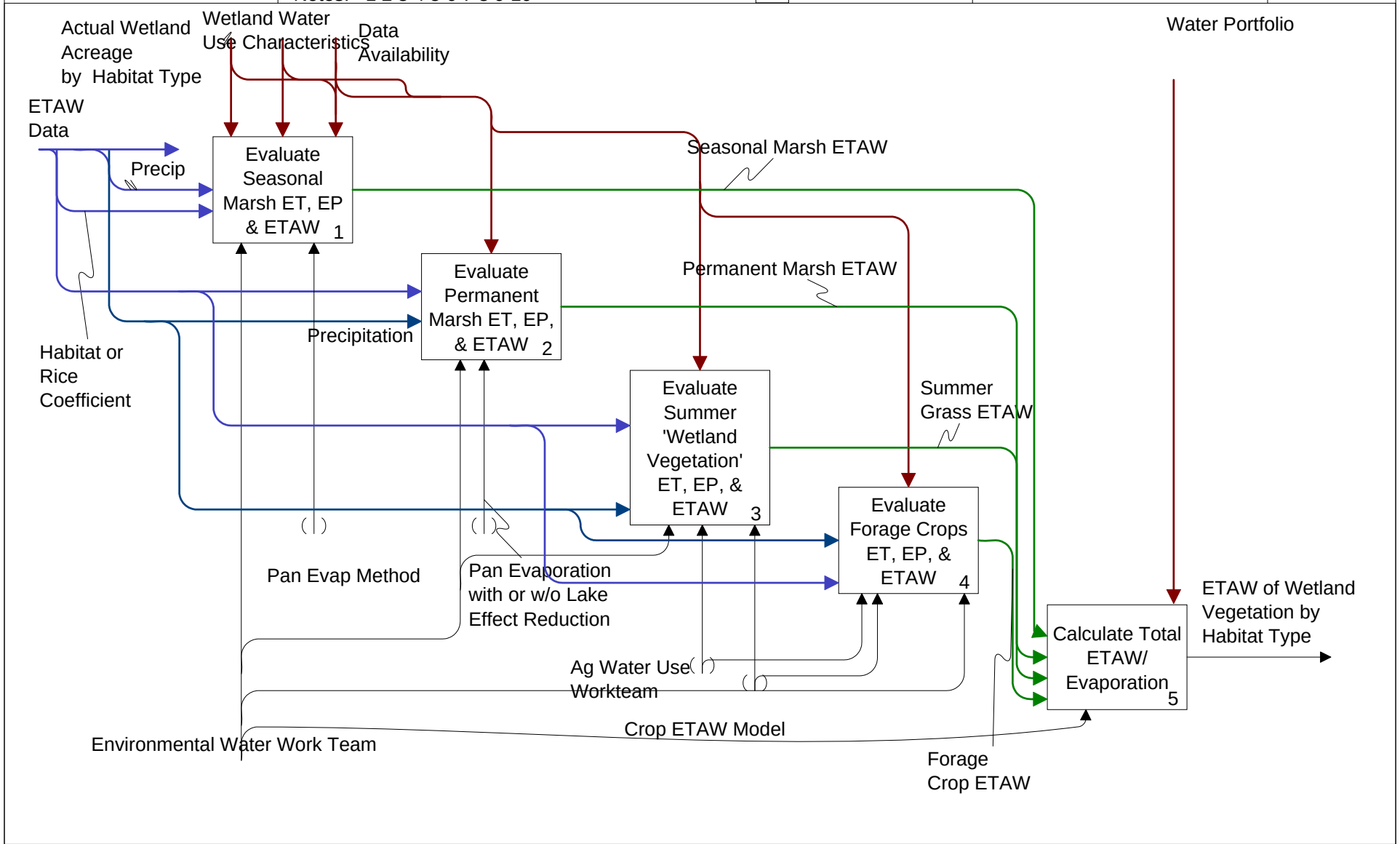

Node:	Title:	Number:
A5214	Develop ET, EP & ETAW of Wetland Vegetation/ Habitat Types	

Used At:	Author: Env Workteam	Date: 10/11/2001	WORKING	READER	DATE
	Project: Flow Diagram	Rev: 10/11/2007	DRAFT		
			RECOMMENDED		
	Notes: 1 2 3 4 5 6 7 8 9 10		PUBLICATION		

CONTEXT:

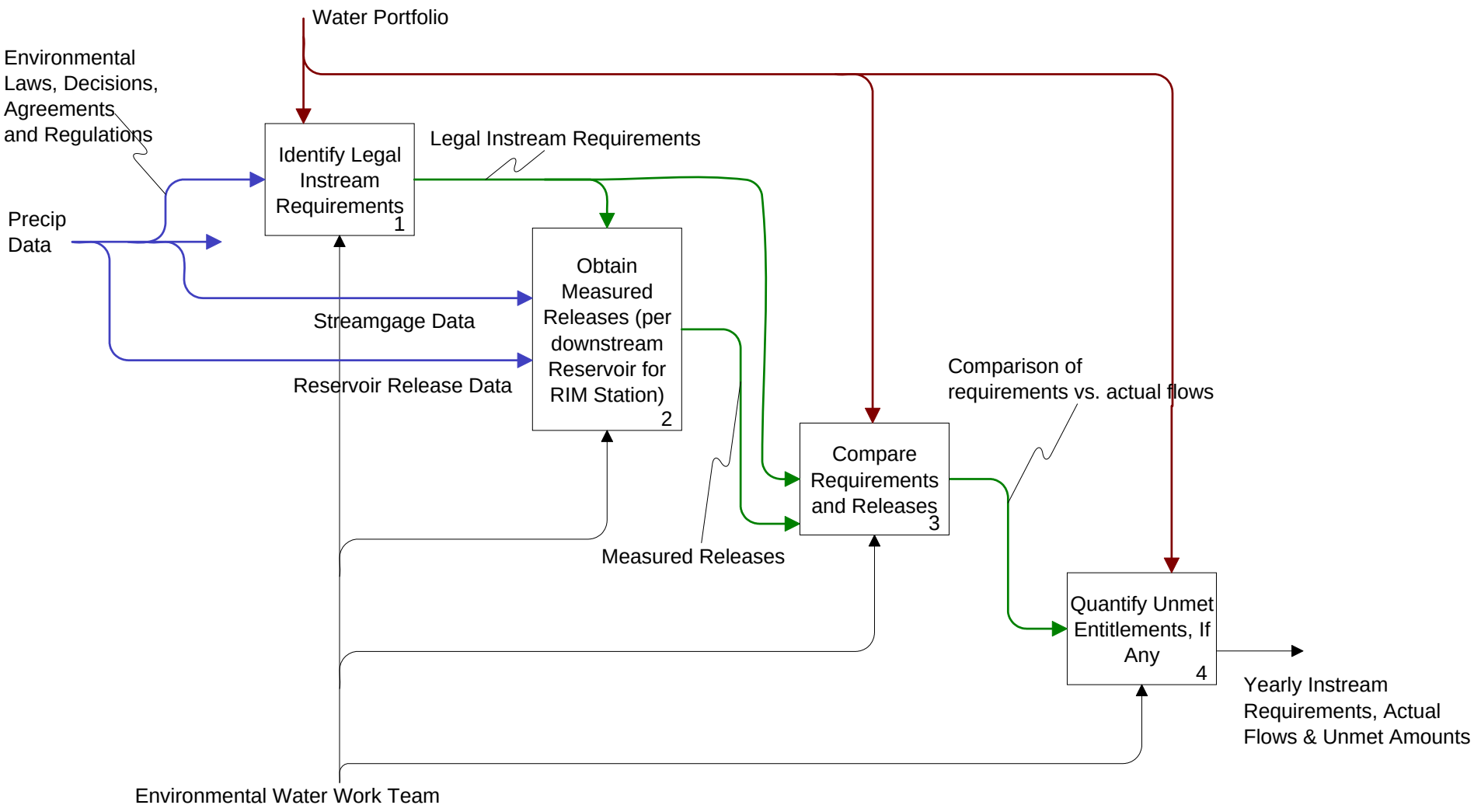

Node:	Title:	Number:
A522	Compile Instream Requirements & Actual Flows	

Environmental Laws, Agreements and Regulations Court Decisions, SWRCB Orders, Agreements between owner/operator and decision maker

Used At:	Author: Env Workteam	Date: 10/11/2001	WORKING	READER	DATE
	Project: Flow Diagram	Rev: 10/11/2007	DRAFT		
			RECOMMENDED		
	Notes: 1 2 3 4 5 6 7 8 9 10		PUBLICATION		

CONTEXT:

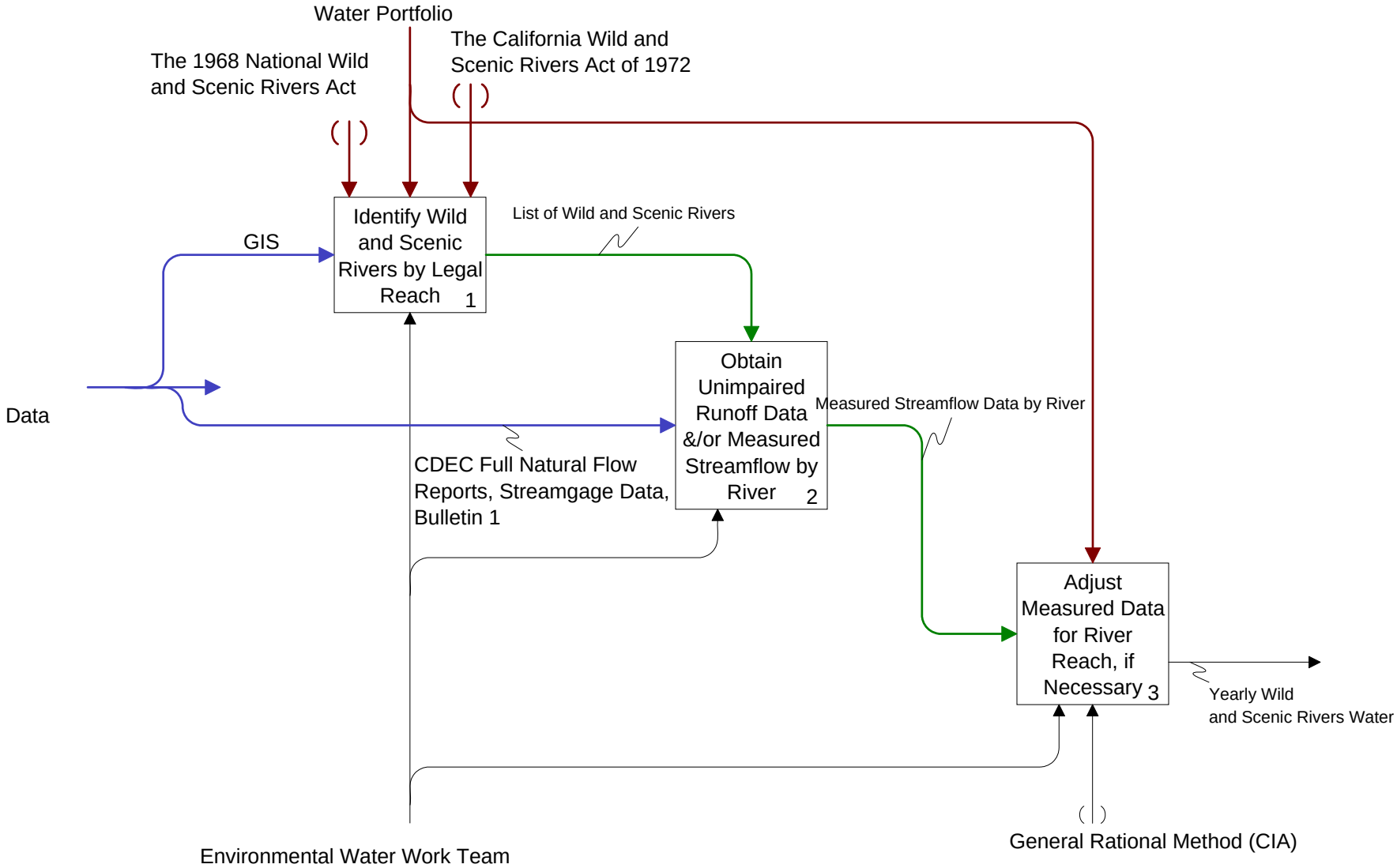

Node:	Title:	Number:
A523	Determine Wild and Scenic Rivers Water	

Used At:	Author: Env Workteam	Date: 12/7/01	WORKING	READER	DATE
	Project: Flow Diagram	Rev: 10/11/2007	DRAFT		
			RECOMMENDED		
	Notes: 1 2 3 4 5 6 7 8 9 10		PUBLICATION		

CONTEXT: A52

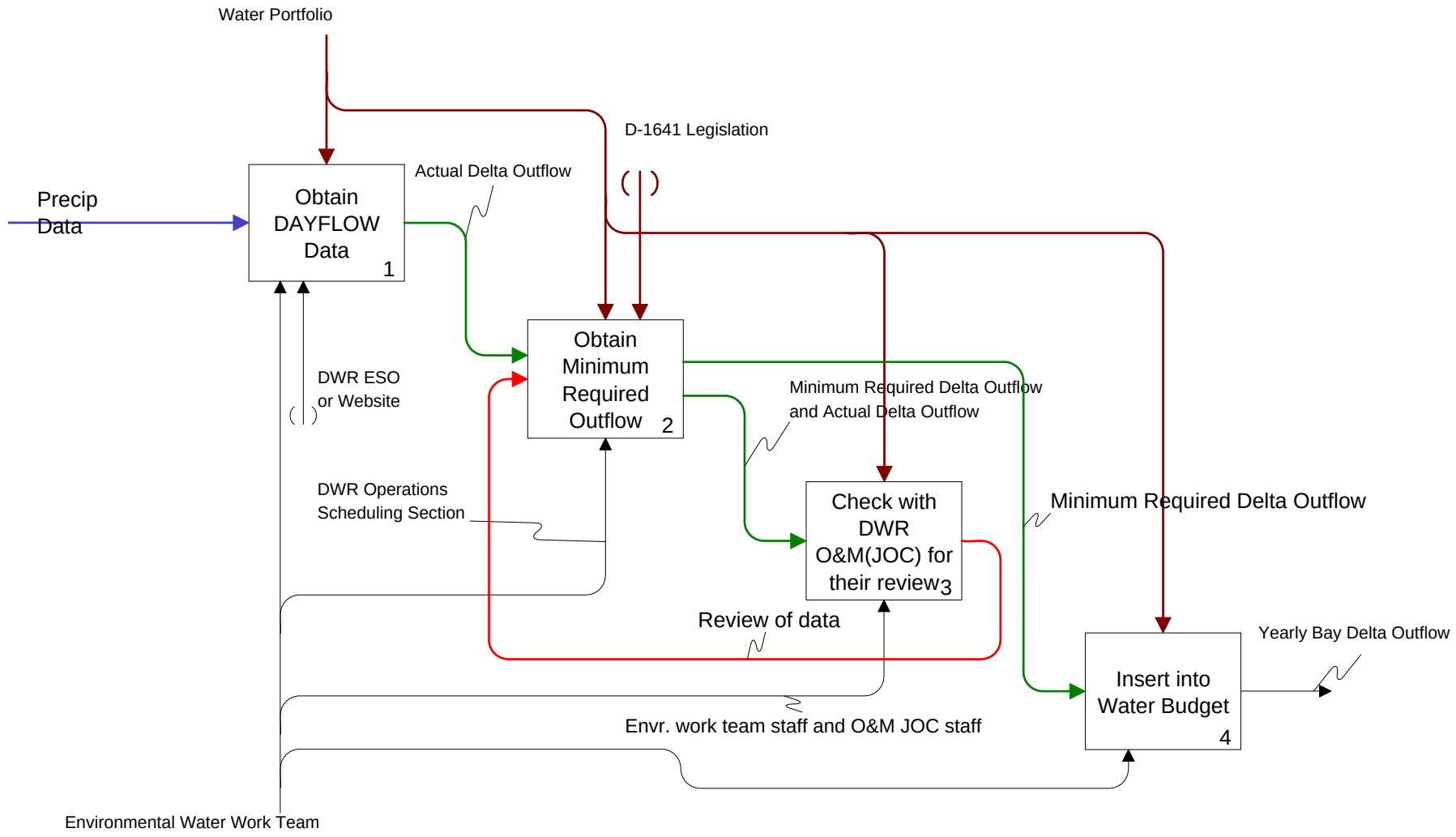

Node:	Title:	Number:
A524	Compile Delta Actual & Required Outflow	

Used At:	Author: Env Workteam	Date: 10/11/2001	WORKING	READER	DATE
	Project: Flow Diagram	Rev: 10/11/2007	DRAFT		
			RECOMMENDED		
	Notes: 1 2 3 4 5 6 7 8 9 10		PUBLICATION		

CONTEXT:

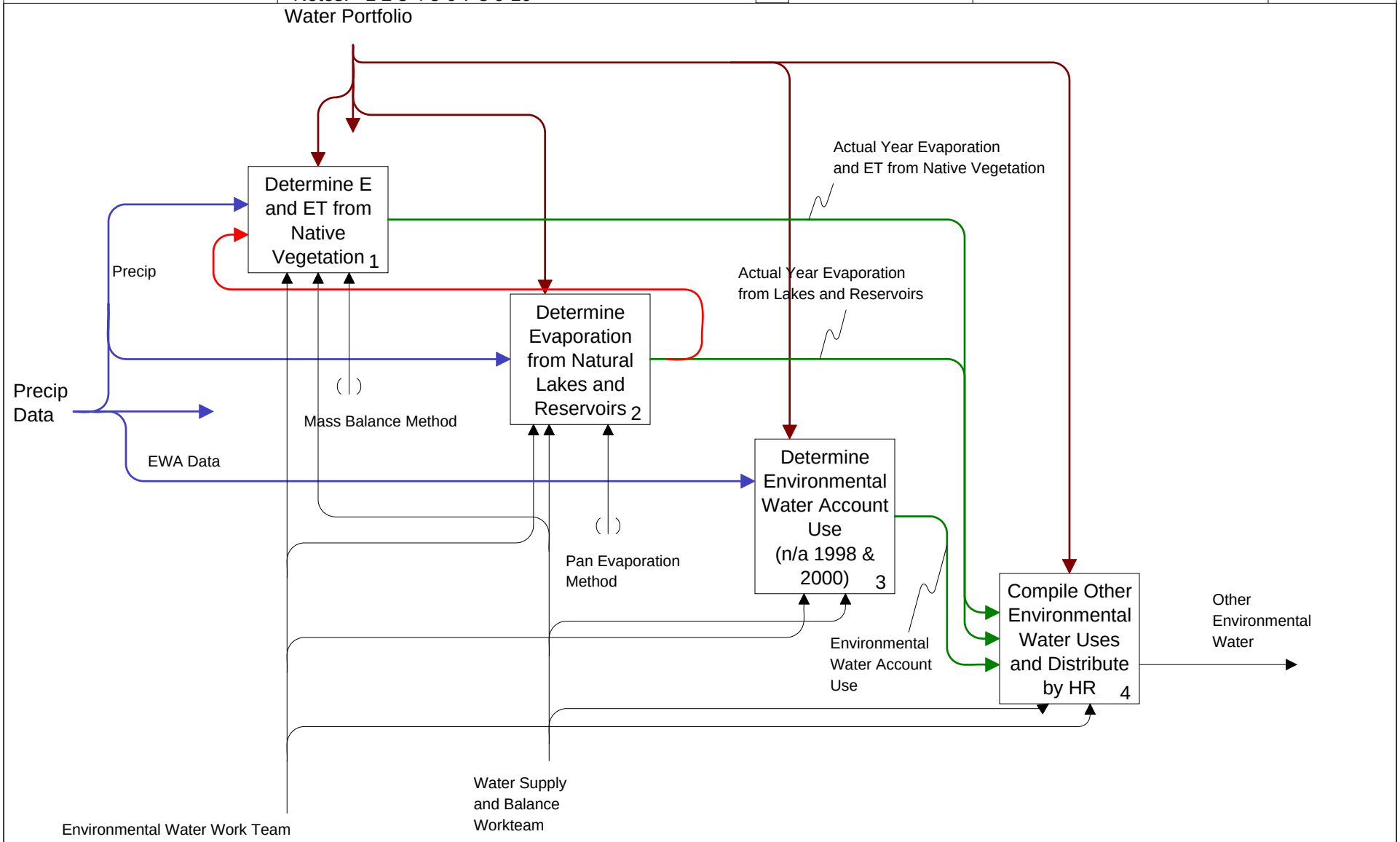

Node:	Title:	Number:
A525	Determine Other Environmental Water Uses	

Used At:	Author: Ag & Urban Workteam	Date: 10/11/2001	WORKING	READER	DATE
	Project: Flow Diagram	Rev: 10/15/2007	DRAFT		
	Notes: 1 2 3 4 5 6 7 8 9 10		RECOMMENDED		
			PUBLICATION		

CONTEXT:

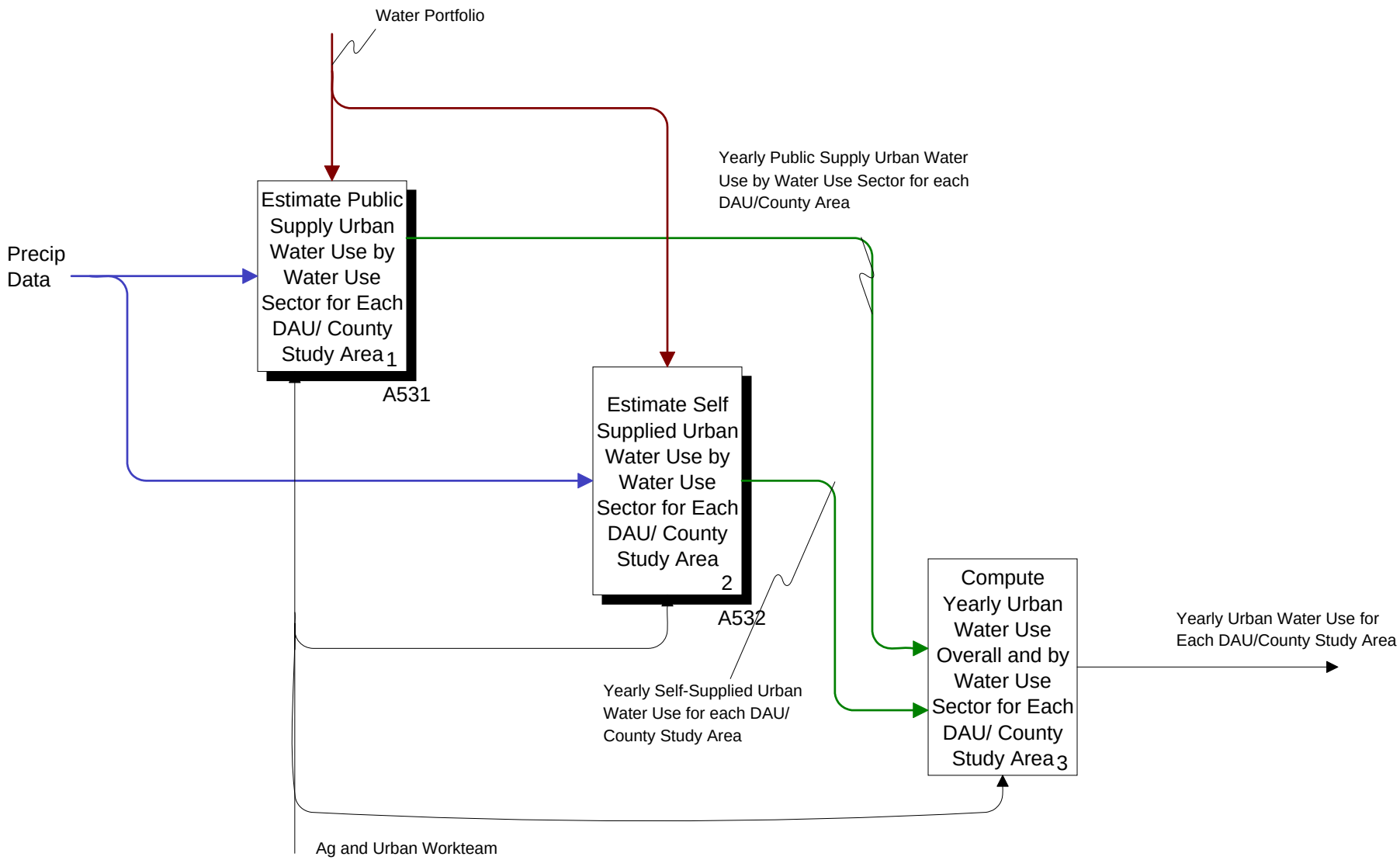

Node:	Title:	Number:
A53	Estimate Urban Water Use	

Used At:	Author: Ag & Urban Workteam Date: 10/11/2001 Project: Flow Diagram Rev: 10/15/2007 Notes: 1 2 3 4 5 6 7 8 9 10		WORKING DRAFT RECOMMENDED PUBLICATION	READER DATE	CONTEXT:

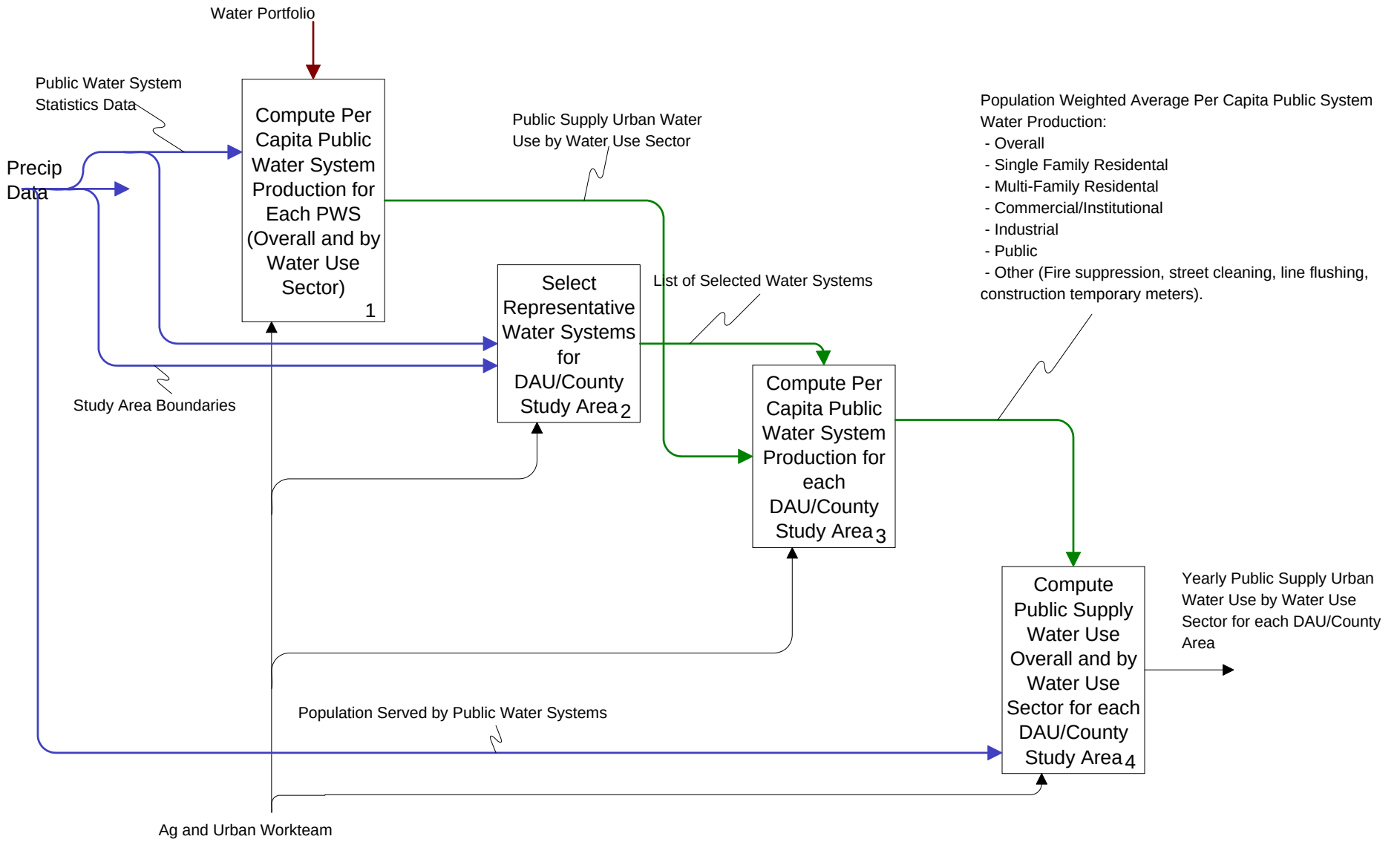

Node: A531	Title: Estimate Public Supply Urban Water Use by Water Use Sector for Each DAU/ County Study Area	Number:

Used At:	Author: Ag & Urban Workteam Date: 8/21/2007	WORKING	READER	DATE	CONTEXT:
	Project: Flow Diagram Rev: 10/15/2007	DRAFT			
		RECOMMENDED			
	Notes: 1 2 3 4 5 6 7 8 9 10	PUBLICATION			A53

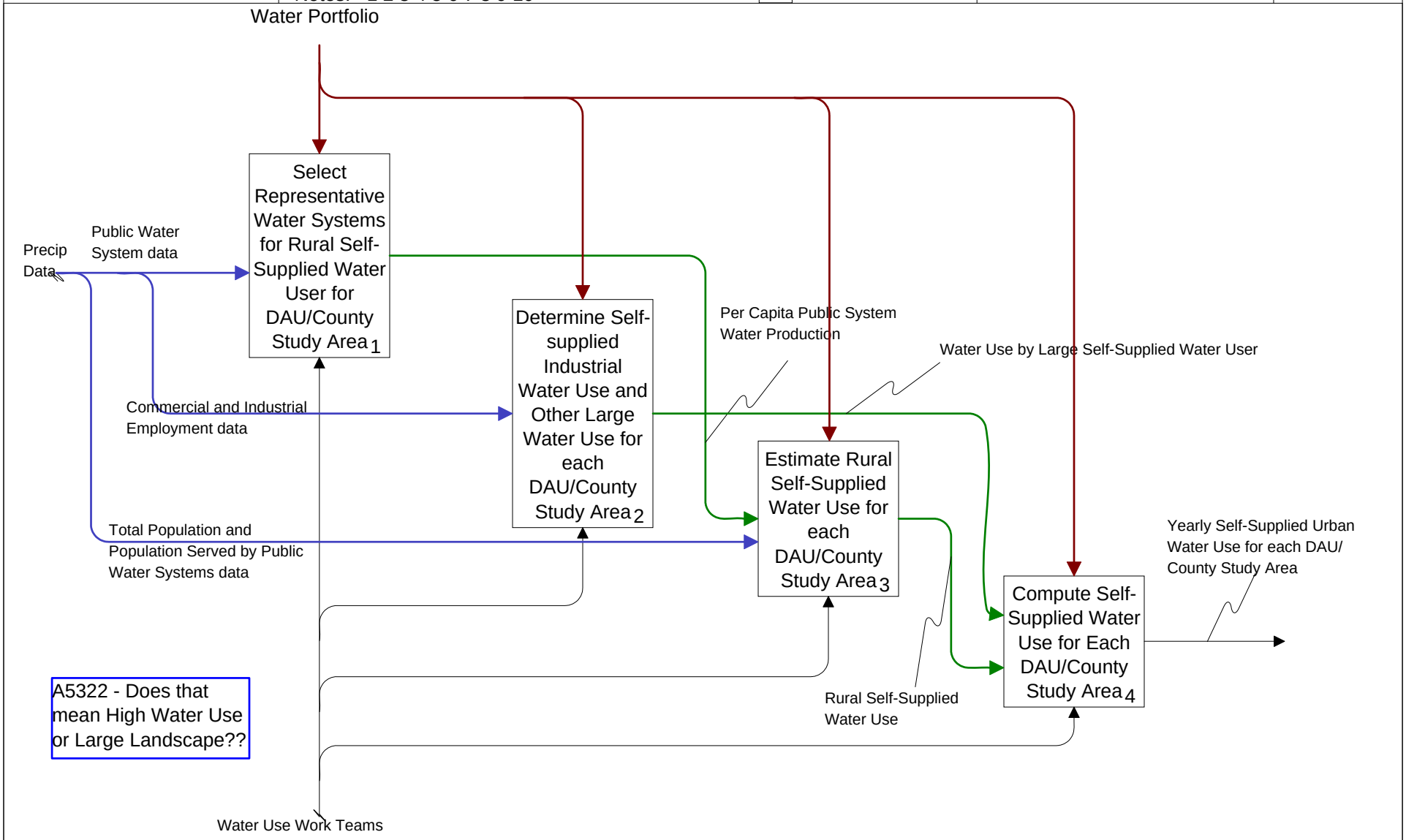

Node:	Title:	Number:
A532	Estimate Self Supplied Urban Water Use by Water Use Sector for Each DAU/ County Study Area	Page: 46

Used At:	Author: Tipton	Date: 10/19/2001	WORKING	READER	DATE
	Project: Flow Diagram	Rev: 8/31/2007	DRAFT		
			RECOMMENDED		
	Notes: 1 2 3 4 5 6 7 8 9 10		PUBLICATION		

CONTEXT: A0

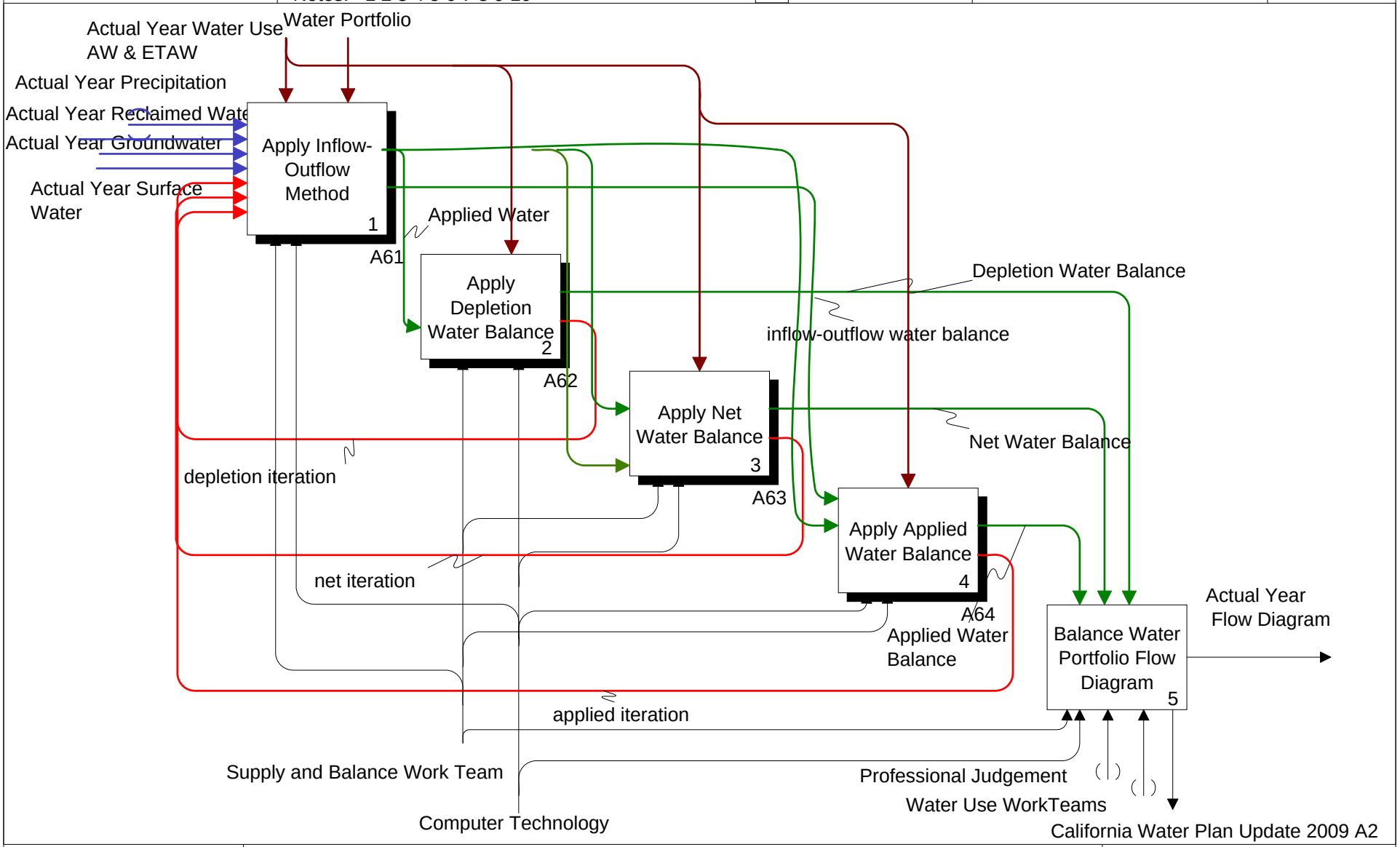

California Water Plan Update 2009 A2

Node:	Title:	Number:
A6	Compile Flow Diagram	

Used At:	Author: Tipton	Date: 8/31/2007	WORKING	READER	DATE
	Project: Flow Diagram	Rev: 10/30/2007	DRAFT		
			RECOMMENDED		
	Notes: 1 2 3 4 5 6 7 8 9 10		PUBLICATION		

CONTEXT: A6

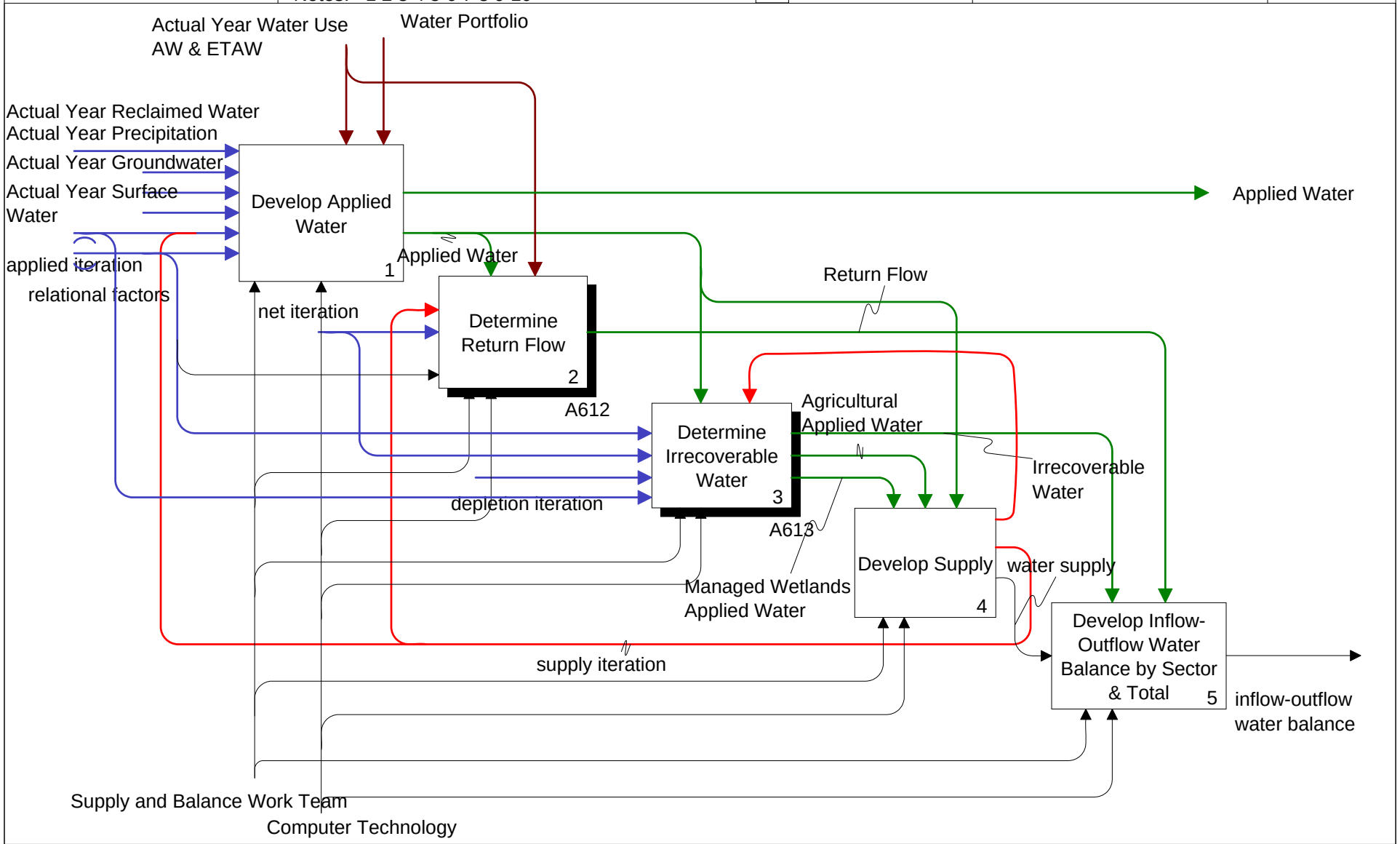

Node:	Title:	Number:
A61	Apply Inflow-Outflow Method	

Used At:	Author: Tipton	Date: 9/5/2007	WORKING	READER	DATE
	Project: Flow Diagram	Rev: 10/30/2007	DRAFT		
			RECOMMENDED		
	Notes: 1 2 3 4 5 6 7 8 9 10		PUBLICATION		

CONTEXT: A61

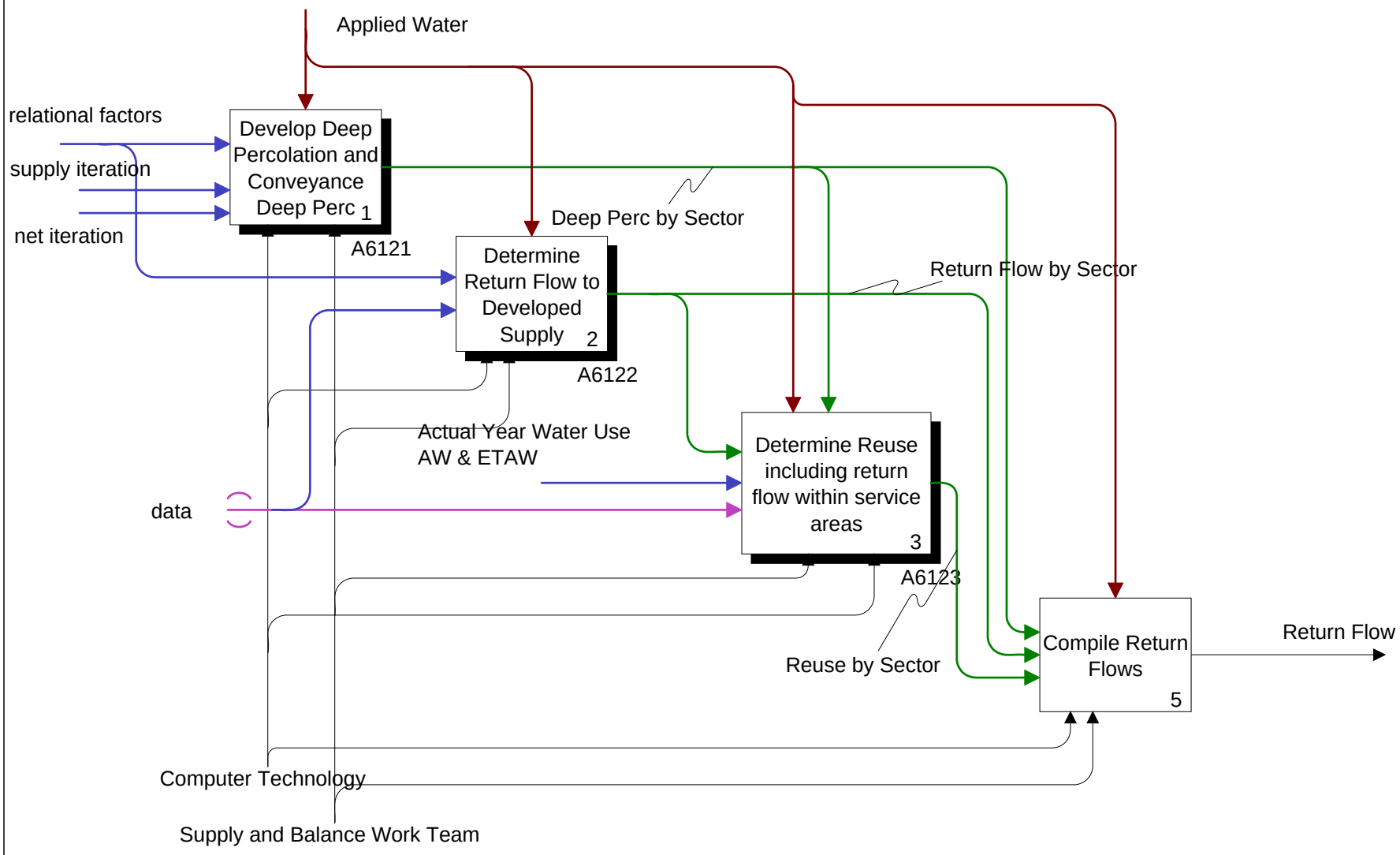

Node:	Title:	Number:
A612	Determine Return Flow	

Used At:	Author: Tipton	Date: 9/11/2007	WORKING	READER	DATE
	Project: Flow Diagram	Rev: 10/30/2007	DRAFT		
			RECOMMENDED		
	Notes: 1 2 3 4 5 6 7 8 9 10		PUBLICATION		

CONTEXT: A612

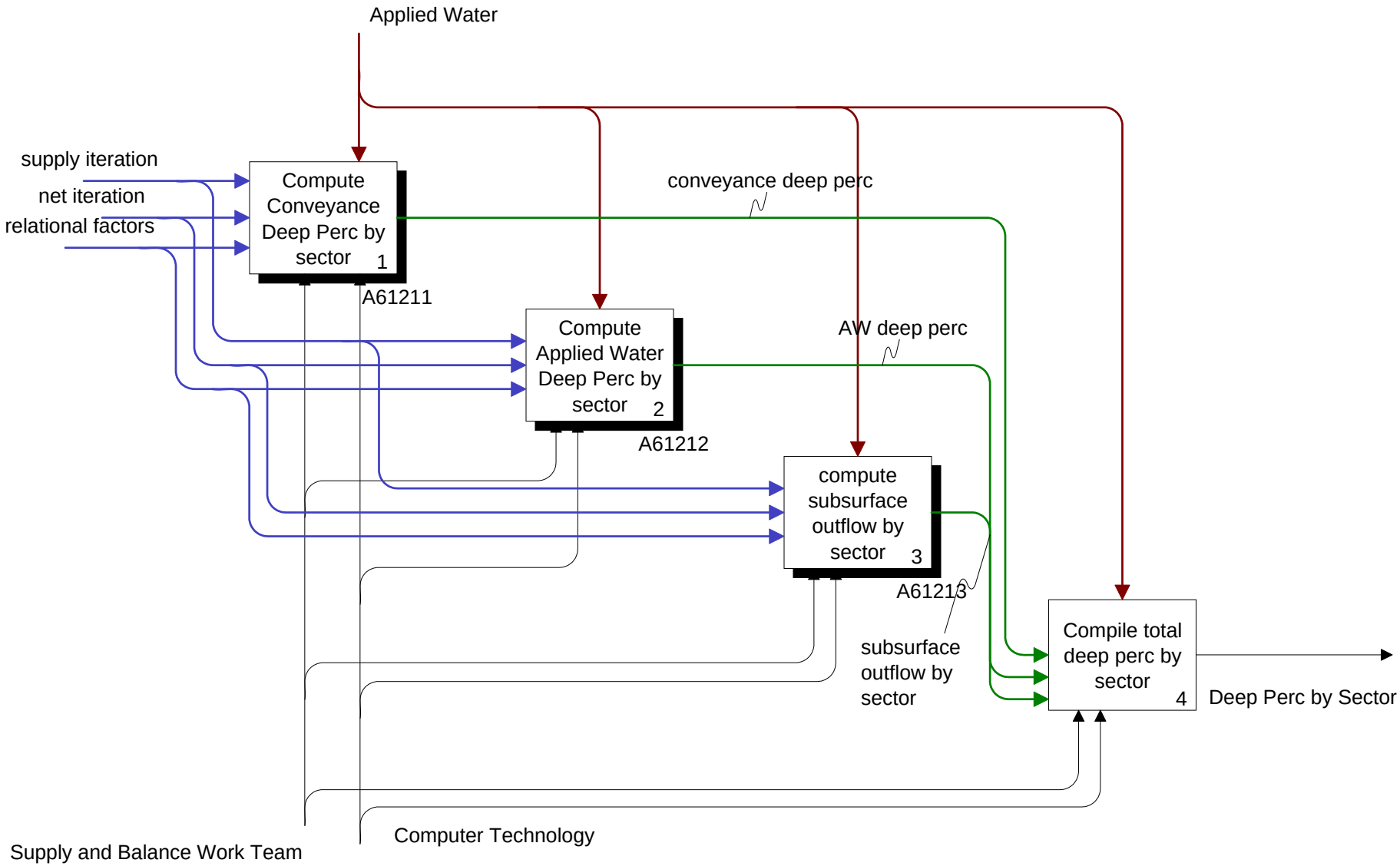

Node:	Title:	Number:
A6121	Develop Deep Percolation and Conveyance Deep Perc	

Used At:	Author: Tipton	Date: 9/11/2007	WORKING	READER	DATE
	Project: Flow Diagram	Rev: 10/30/2007	DRAFT		
			RECOMMENDED		
	Notes: 1 2 3 4 5 6 7 8 9 10		PUBLICATION		

CONTEXT: A6121

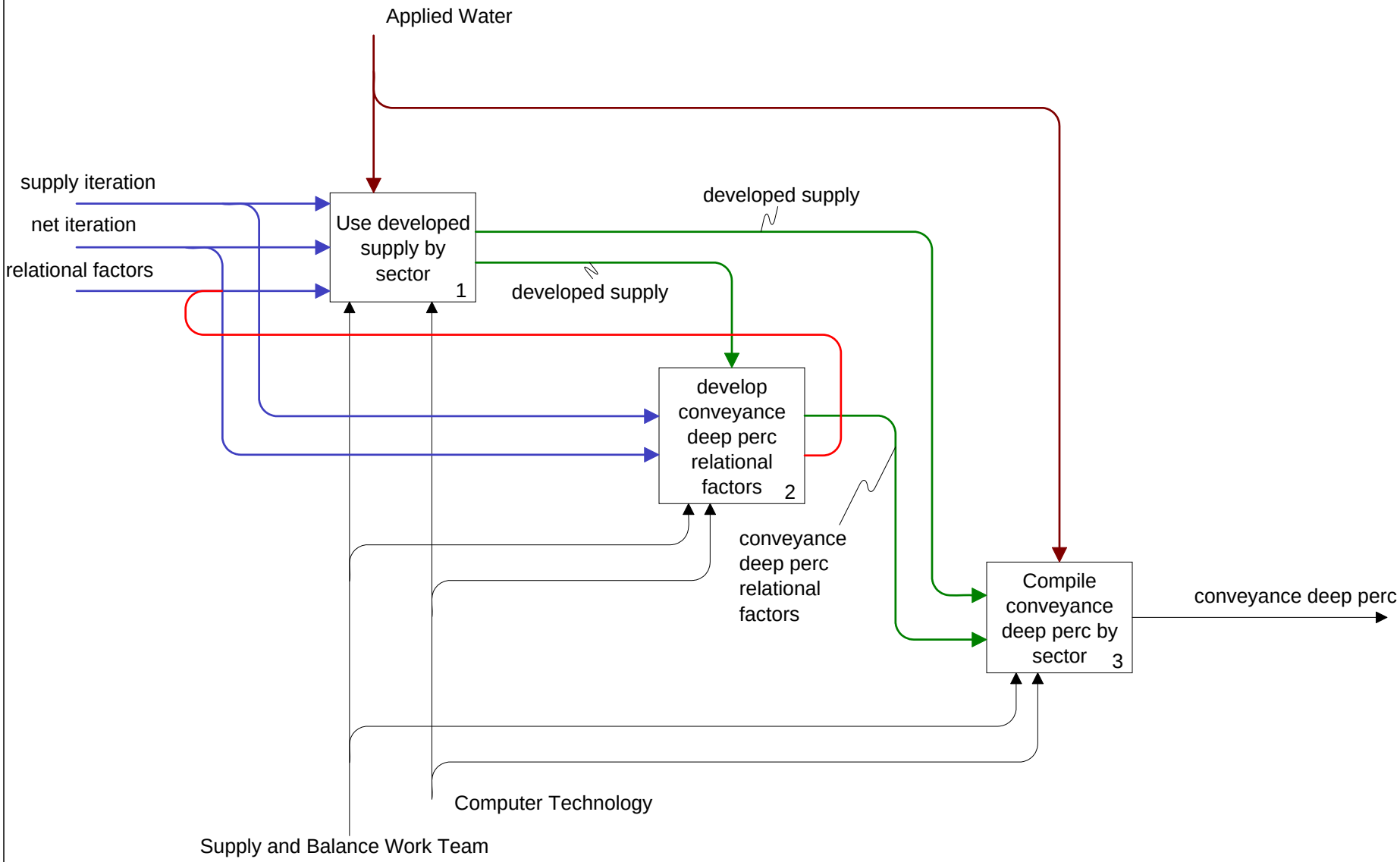

Node: A61211	Title: Compute Conveyance Deep Perc by sector	Number:

Used At:	Author: Tipton	Date: 9/11/2007	WORKING	READER	DATE
	Project: Flow Diagram	Rev: 10/30/2007	DRAFT		
			RECOMMENDED		
	Notes: 1 2 3 4 5 6 7 8 9 10		PUBLICATION		

CONTEXT: A6121

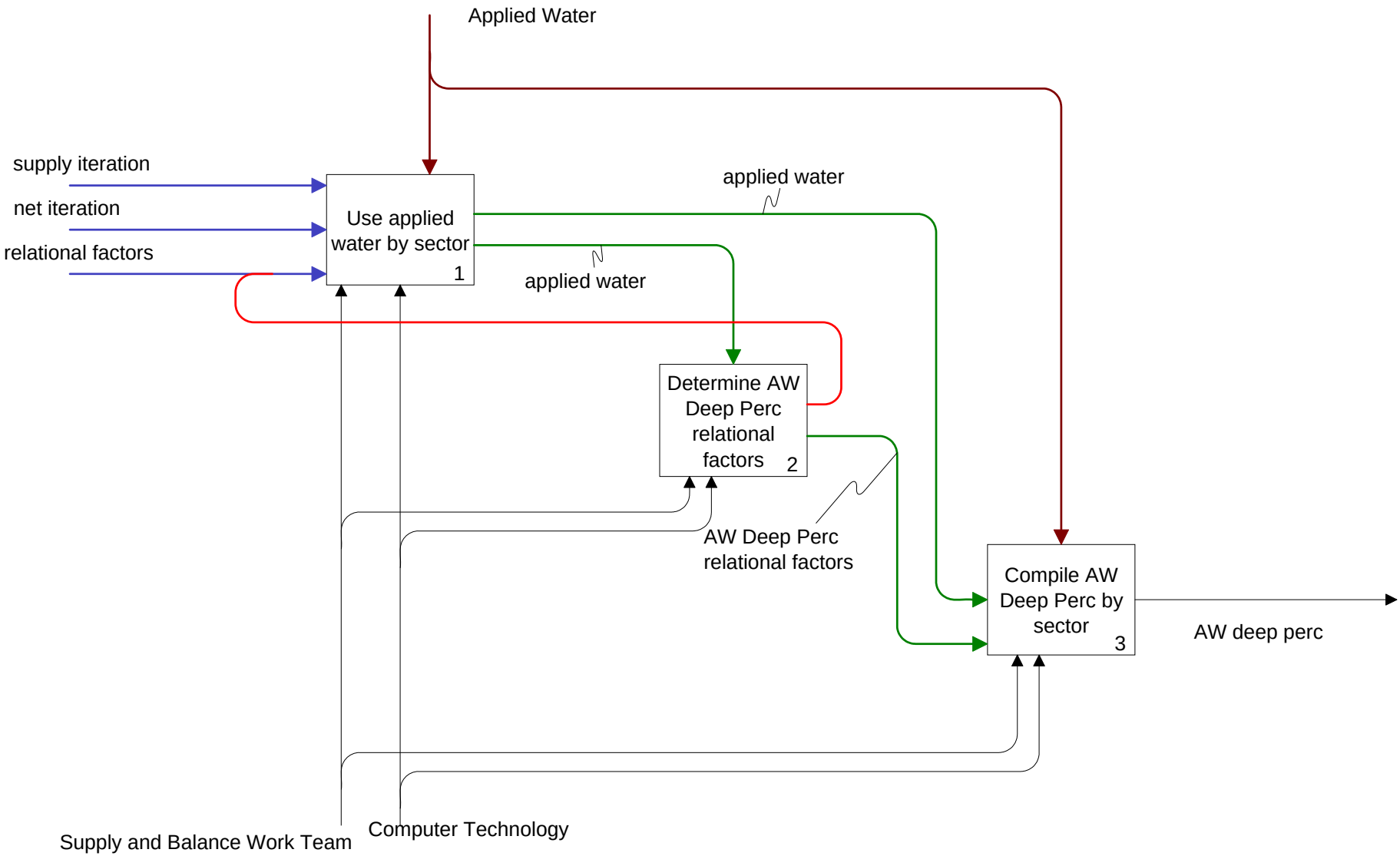

Node:	Title:	Number:
A61212	Compute Applied Water Deep Perc by sector	

Used At:	Author: Tipton	Date: 9/11/2007	WORKING	READER	DATE
	Project: Flow Diagram	Rev: 10/30/2007	DRAFT		
			RECOMMENDED		
	Notes: 1 2 3 4 5 6 7 8 9 10		PUBLICATION		

CONTEXT: A6121

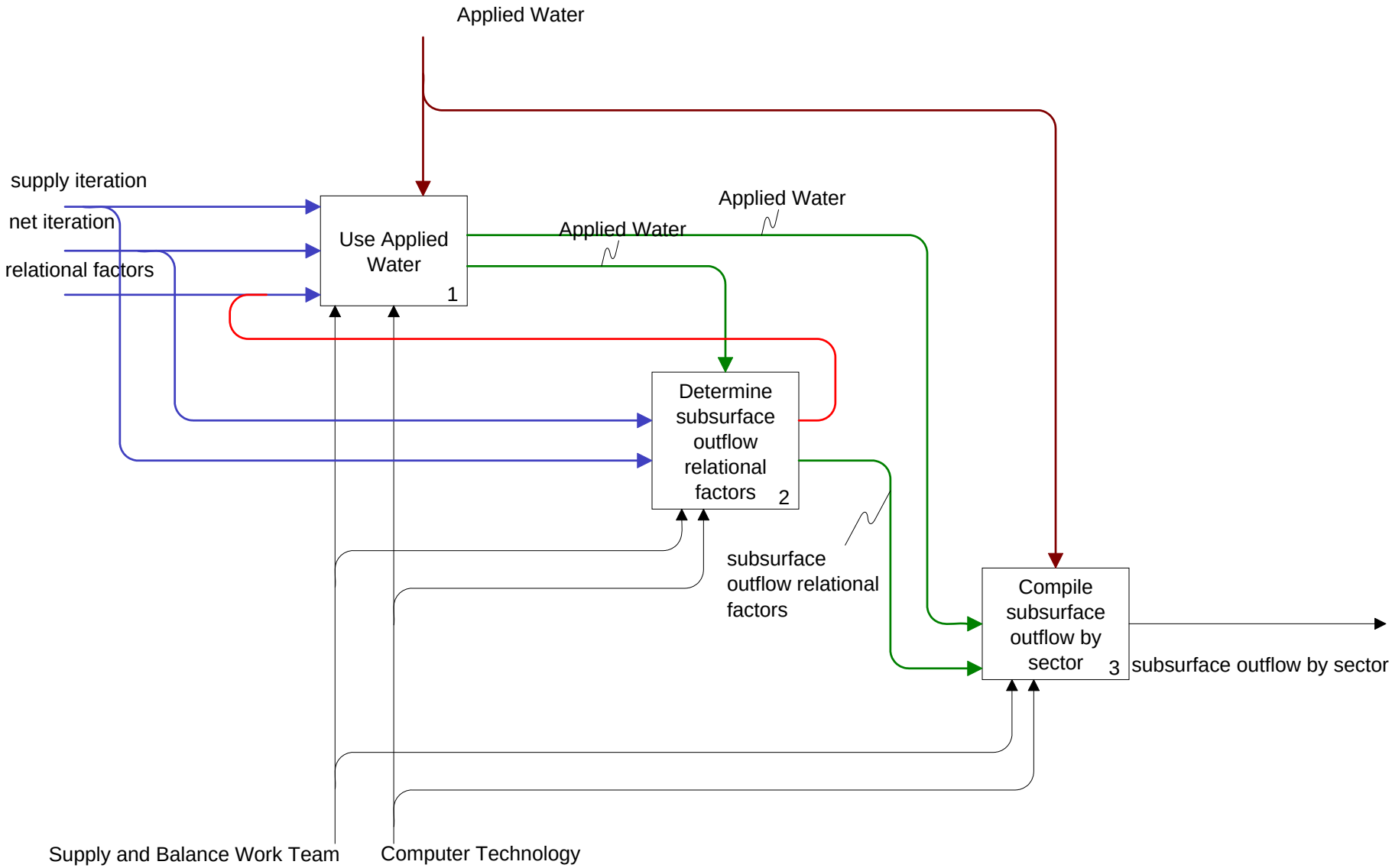

Node:	Title:	Number:
A61213	compute subsurface outflow by sector	

Used At:	Author: Tipton	Date: 9/11/2007	■ WORKING	READER	DATE
	Project: Flow Diagram	Rev: 9/11/2007	DRAFT		
			RECOMMENDED		
	Notes: 1 2 3 4 5 6 7 8 9 10		PUBLICATION		

CONTEXT: A612

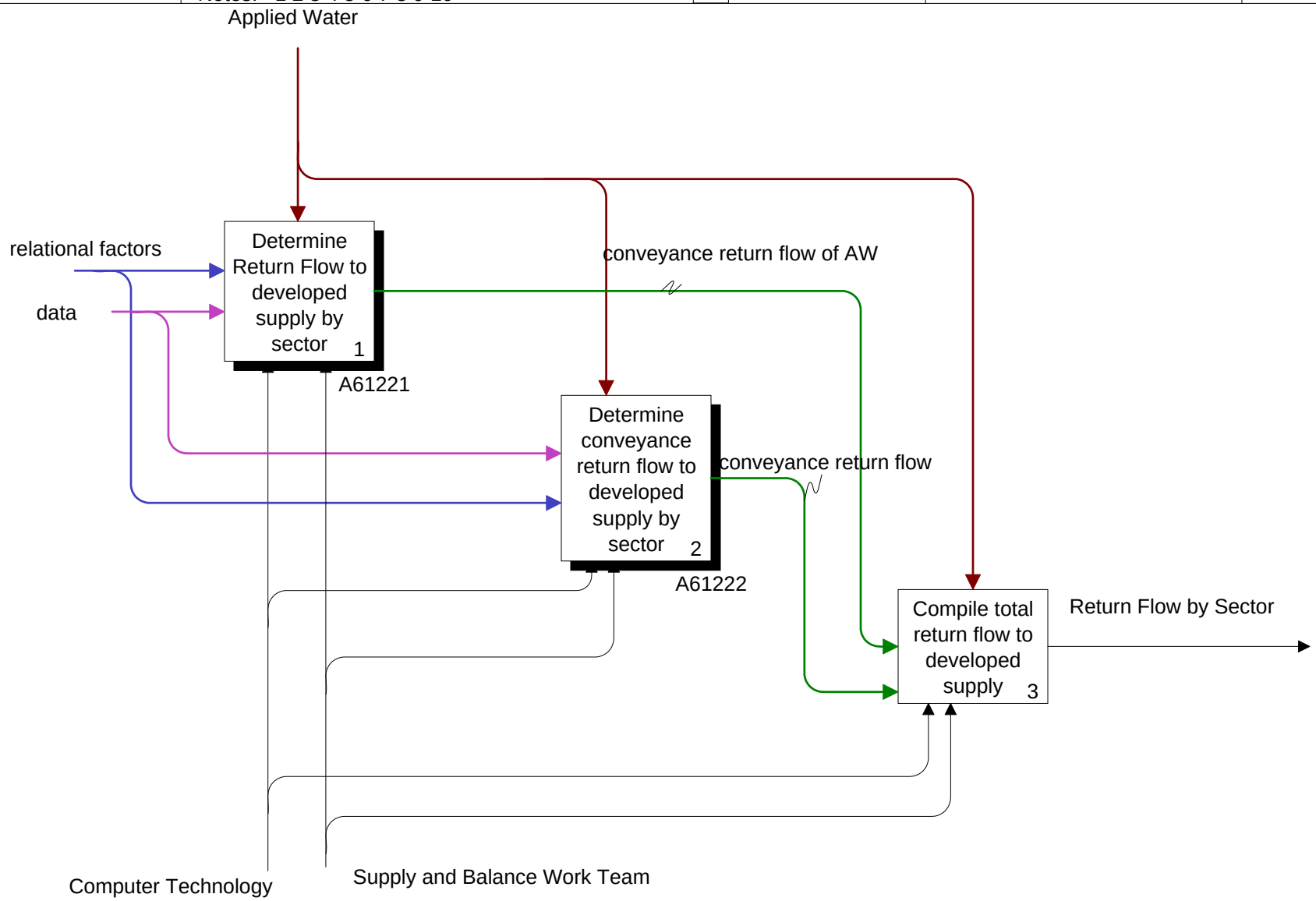

Node:	Title:	Number:
A6122	Determine Return Flow to Developed Supply	

Used At:	Author: Tipton	Date: 9/11/2007	WORKING	READER	DATE
	Project: Flow Diagram	Rev: 11/1/2007	DRAFT		
			RECOMMENDED		
	Notes: 1 2 3 4 5 6 7 8 9 10		PUBLICATION		

CONTEXT: A6122

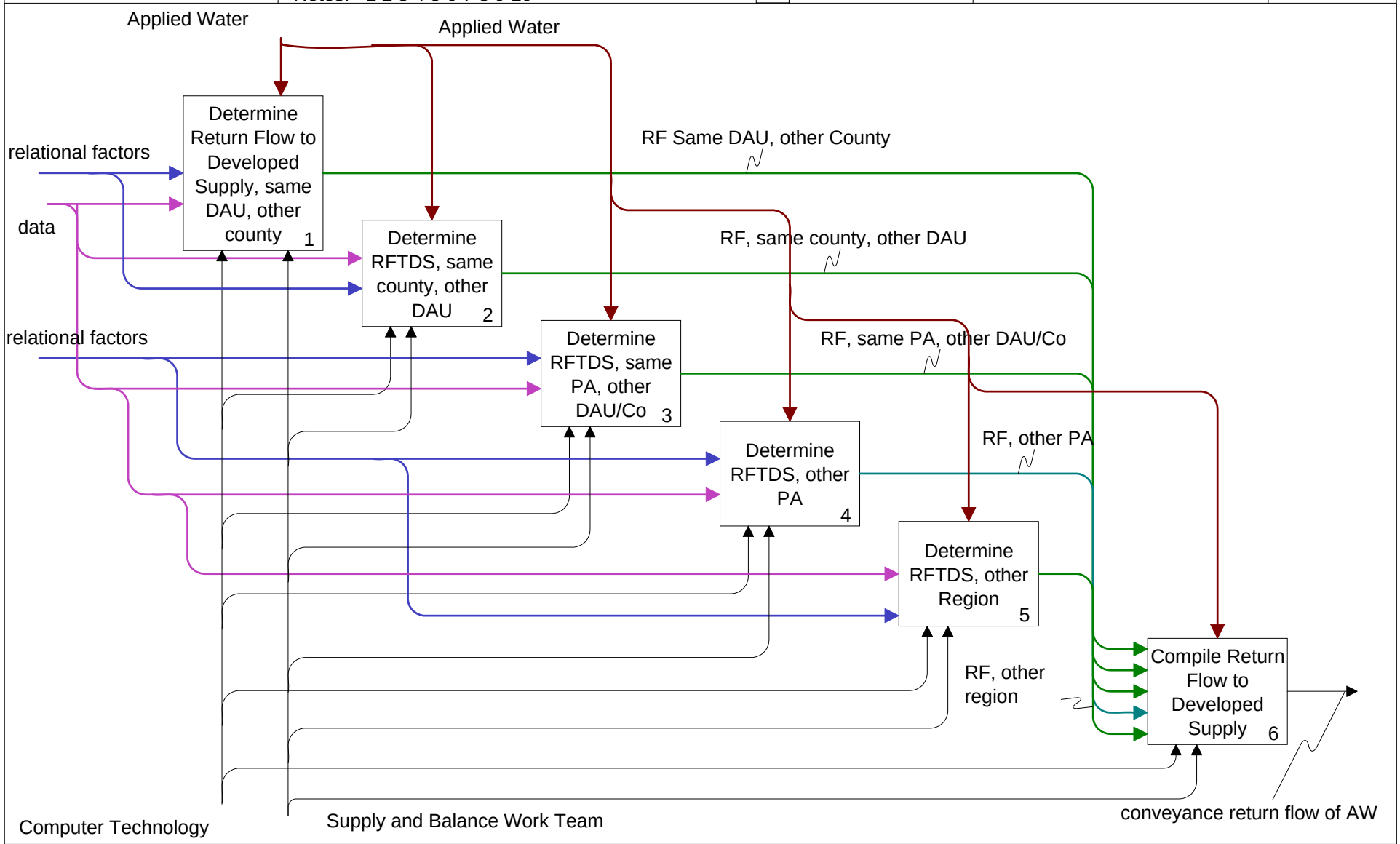

Node: A61221	Title: Determine Return Flow to developed supply by sector	Number:

Used At:	Author: Tipton	Date: 9/11/2007	WORKING	READER	DATE
	Project: Flow Diagram	Rev: 11/1/2007	DRAFT		
	Notes: 1 2 3 4 5 6 7 8 9 10		RECOMMENDED		
			PUBLICATION		

CONTEXT:

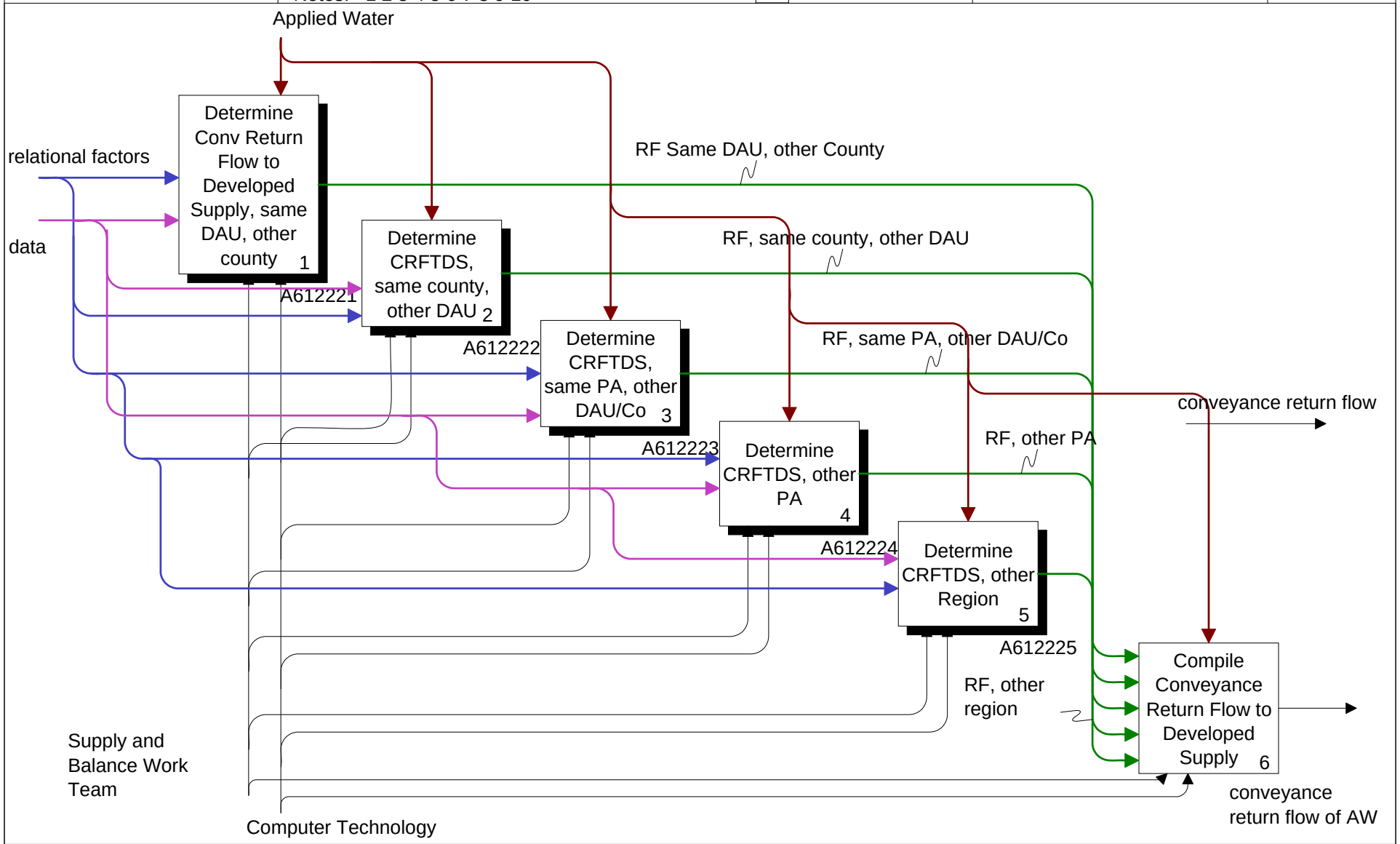

Node:	Title:	Number:
A61222	Determine conveyance return flow to developed supply by sector	

Used At:	Author: Tipton	Date: 9/11/2007	WORKING	READER	DATE
	Project: Flow Diagram	Rev: 11/1/2007	DRAFT		
	Notes: 1 2 3 4 5 6 7 8 9 10		RECOMMENDED		
			PUBLICATION		

CONTEXT:

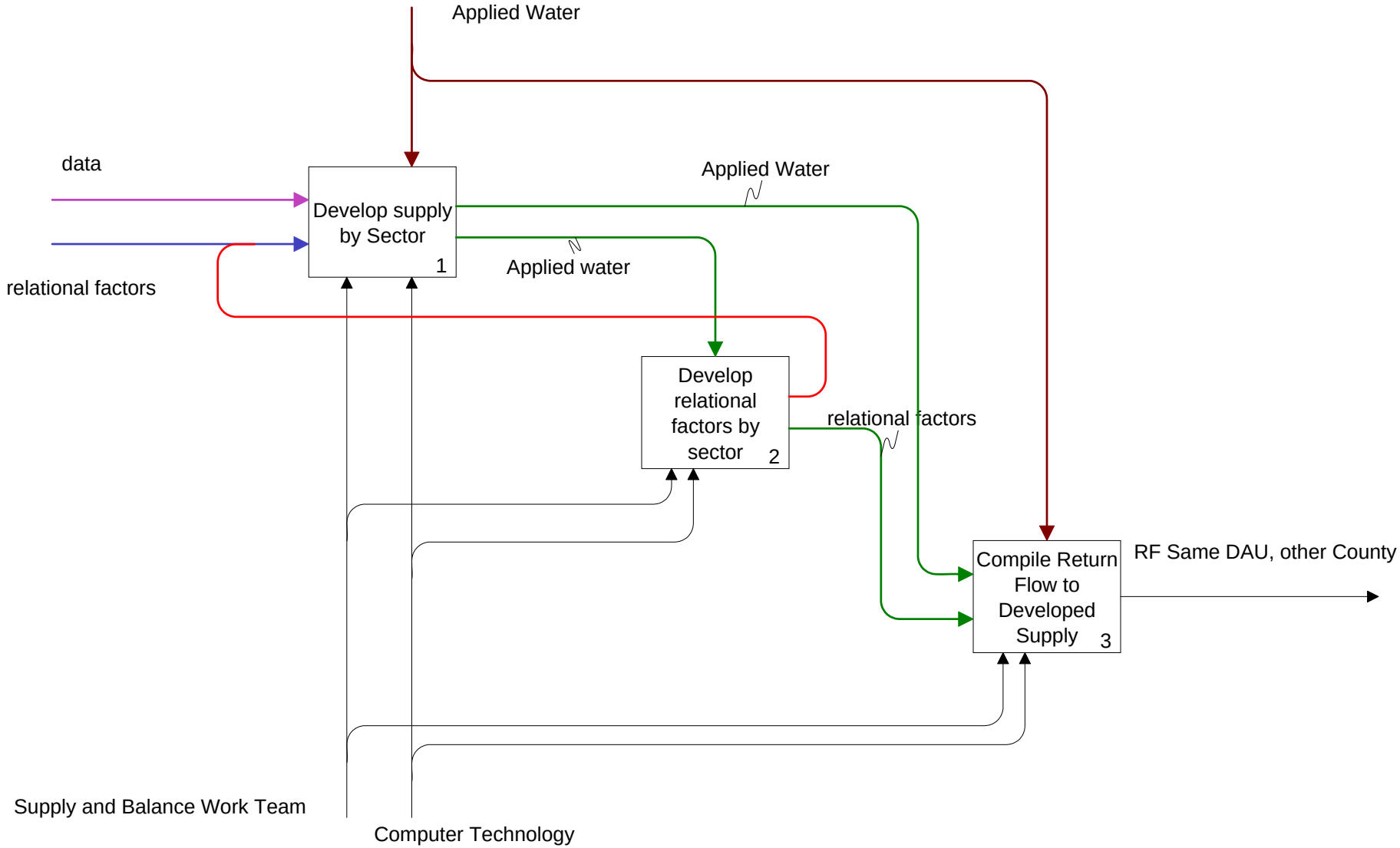

Node:	Title:	Number:
A612221	Determine Conv Return Flow to Developed Supply, same DAU, other county	

Used At:	Author: Tipton	Date: 9/11/2007	■ WORKING	READER	DATE
	Project: Flow Diagram	Rev: 9/11/2007	DRAFT		
	Notes: 1 2 3 4 5 6 7 8 9 10		RECOMMENDED		
			PUBLICATION		

CONTEXT:

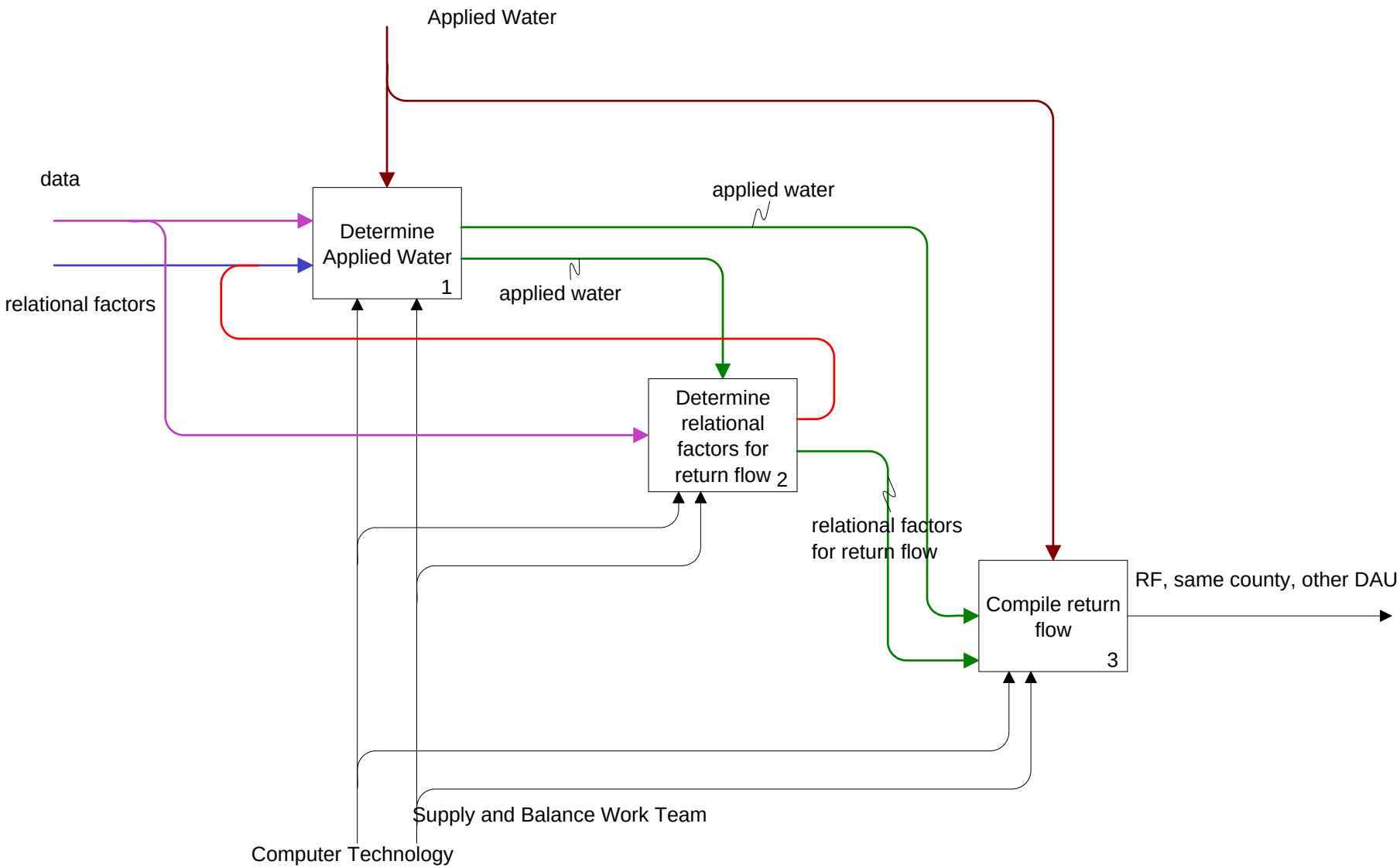

Node:	Title:	Number:
A612222	Determine CRFTDS, same county, other DAU	

Used At:	Author: Tipton	Date: 9/11/2007	WORKING	READER	DATE
	Project: Flow Diagram	Rev: 11/1/2007	DRAFT		
			RECOMMENDED		
	Notes: 1 2 3 4 5 6 7 8 9 10		PUBLICATION		

CONTEXT:

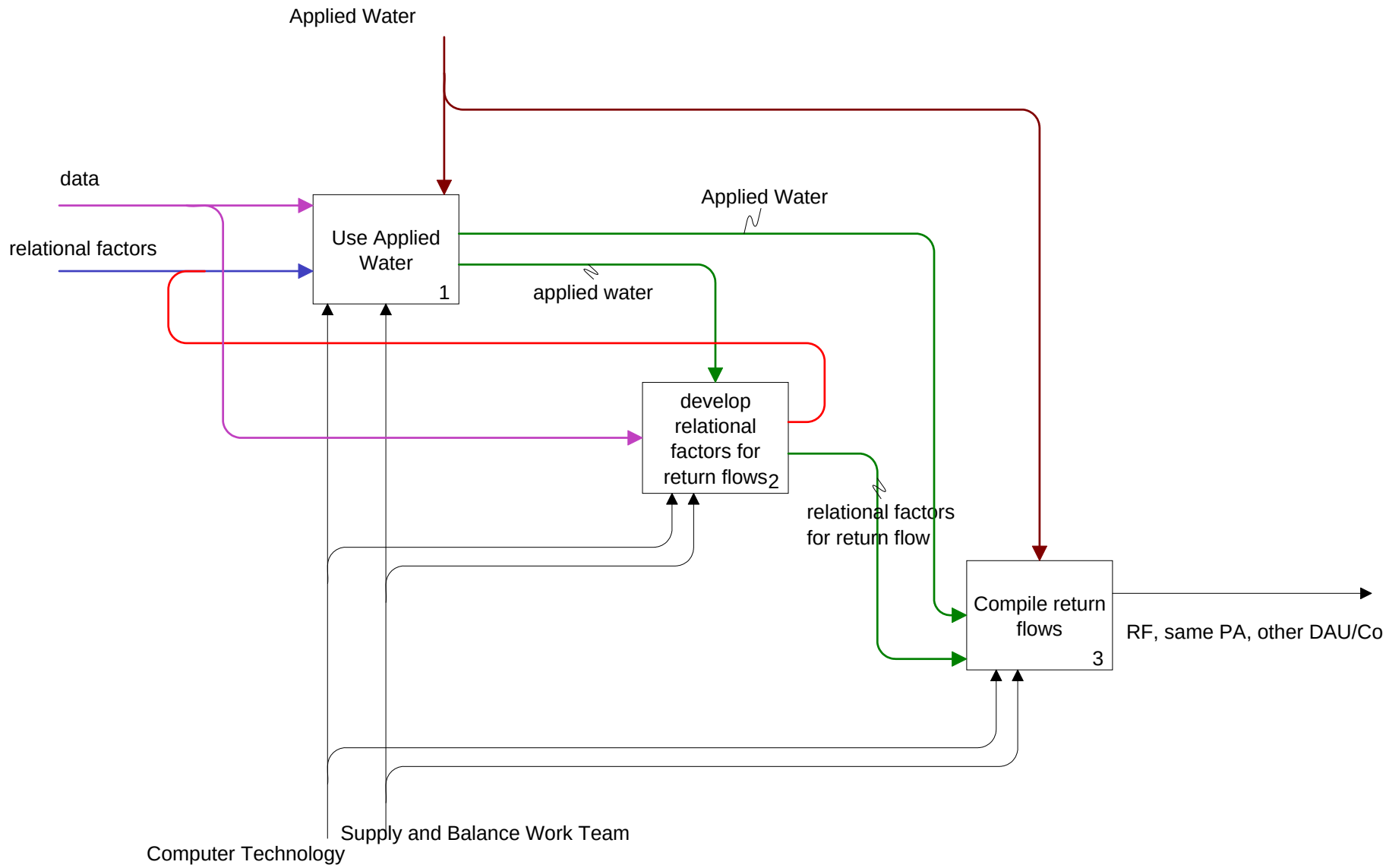

Node: A612223	Title: Determine CRFTDS, same PA, other DAU/Co	Number:

Used At:	Author: Tipton	Date: 9/11/2007	WORKING	READER	DATE
	Project: Flow Diagram	Rev: 11/1/2007	DRAFT		
			RECOMMENDED		
	Notes: 1 2 3 4 5 6 7 8 9 10		PUBLICATION		

CONTEXT:

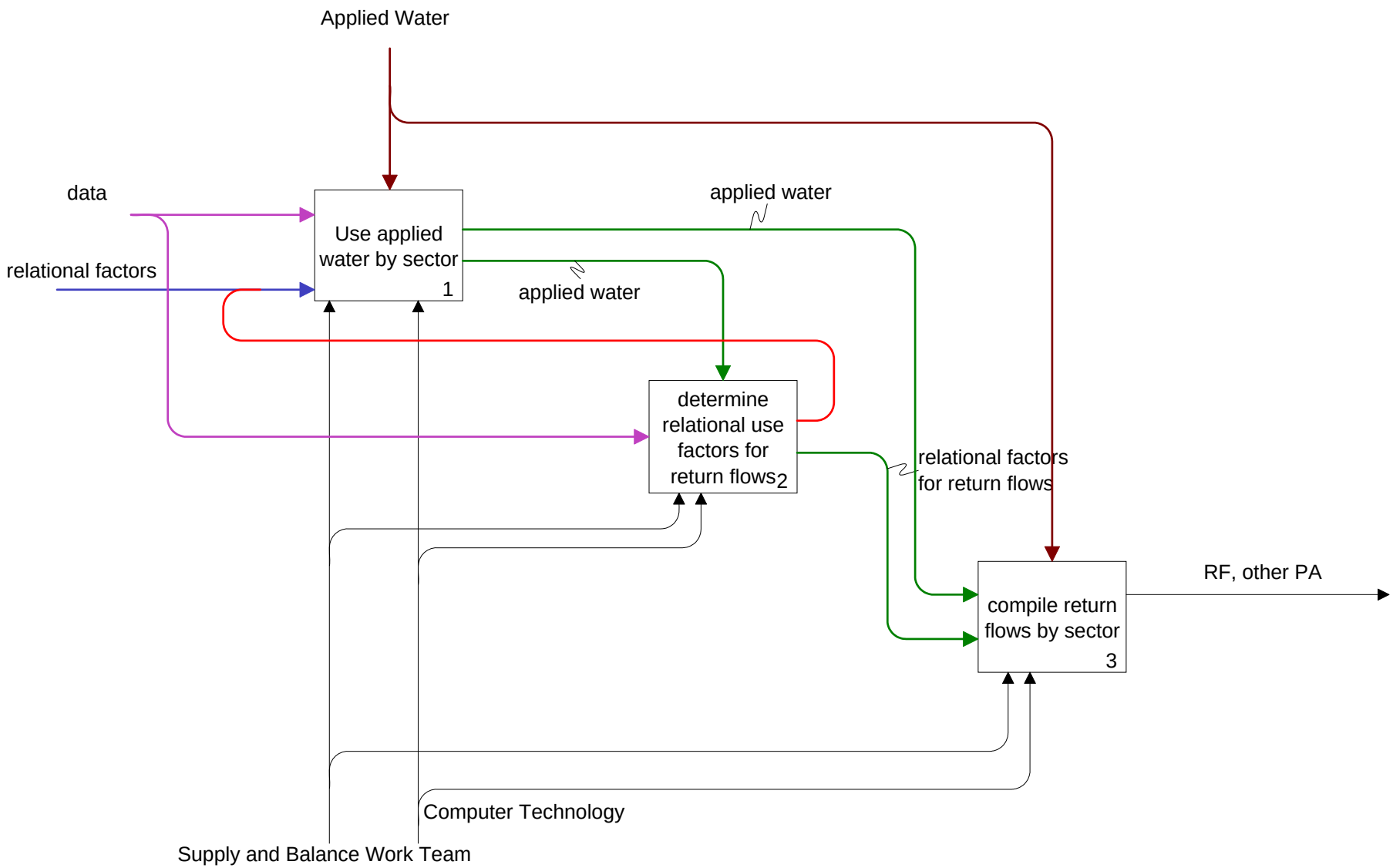

Node: A612224	Title: Determine CRFTDS, other PA	Number:

Used At:	Author: Tipton	Date: 9/11/2007	WORKING	READER	DATE
	Project: Flow Diagram	Rev: 9/11/2007	DRAFT		
	Notes: 1 2 3 4 5 6 7 8 9 10		RECOMMENDED		
			PUBLICATION		

CONTEXT:

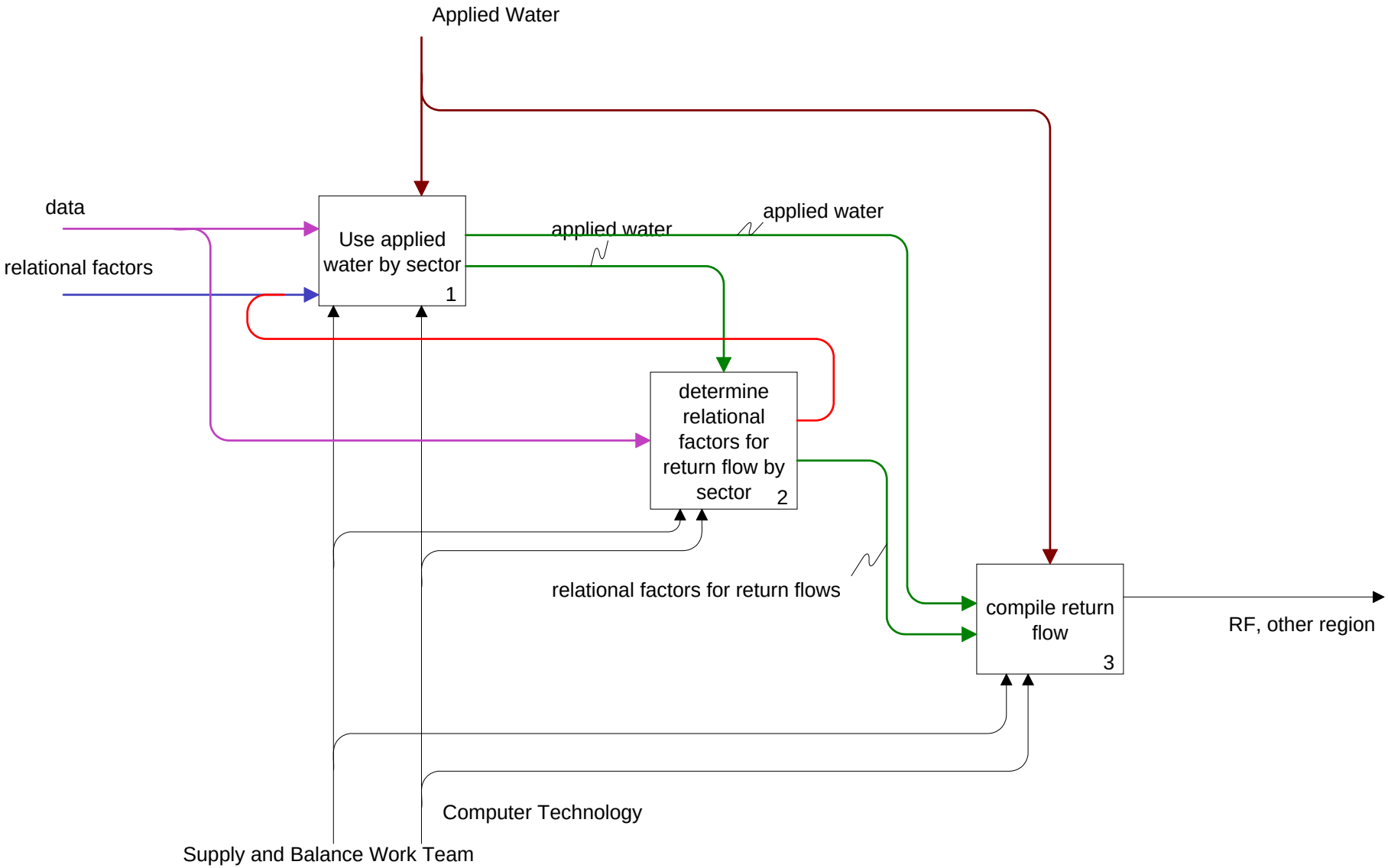

Node:	Title:	Number:
A612225	Determine CRFTDS, other Region	

Used At:	Author: Tipton	Date: 9/12/2007	WORKING	READER	DATE
	Project: Flow Diagram	Rev: 11/1/2007	DRAFT		
			RECOMMENDED		
	Notes: 1 2 3 4 5 6 7 8 9 10		PUBLICATION		

CONTEXT: A612

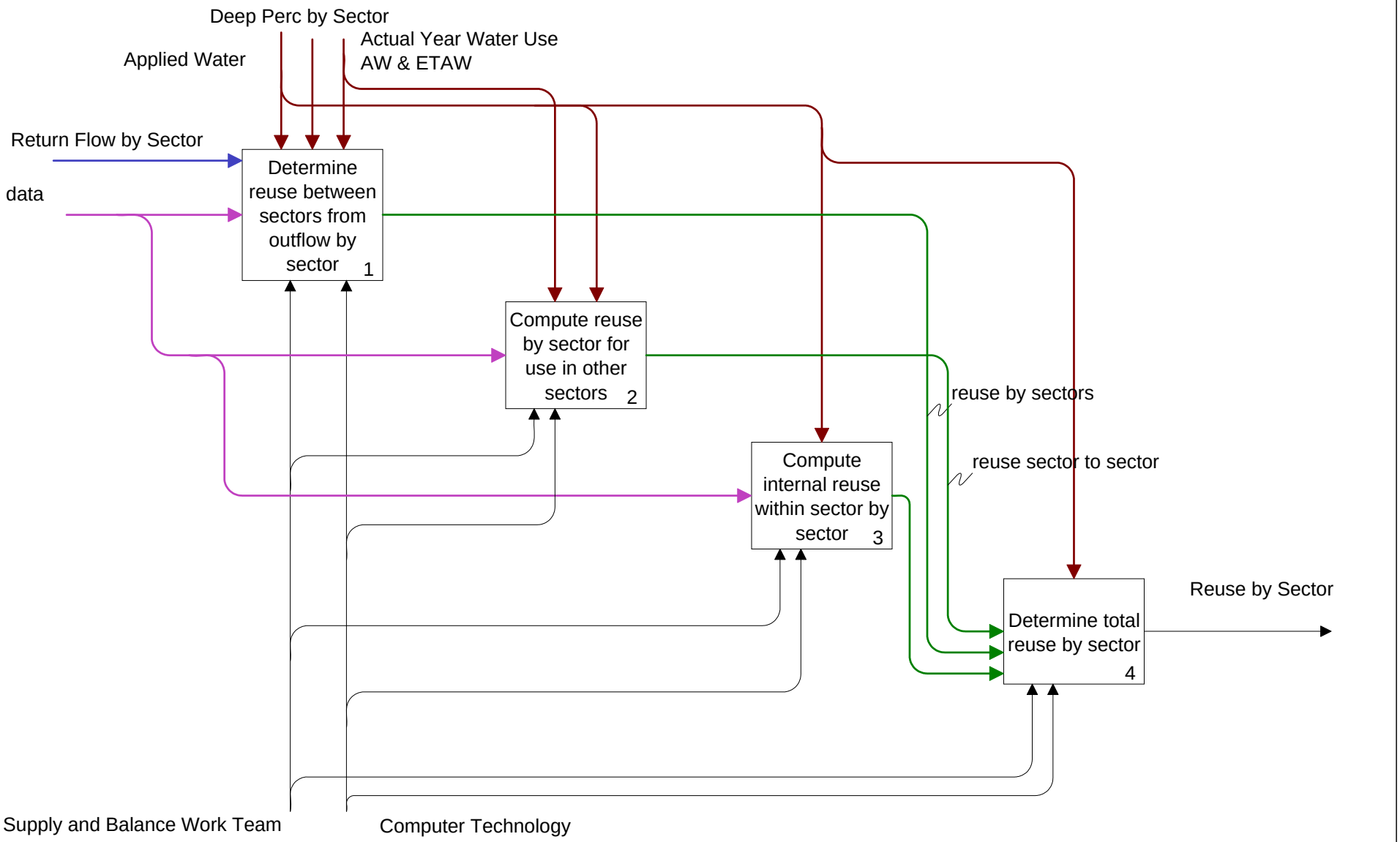

Node:	Title:	Number:
A6123	Determine Reuse including return flow within service areas	

Used At:	Author: Tipton	Date: 9/5/2007	WORKING	READER	DATE
	Project: Flow Diagram	Rev: 3/24/2010	DRAFT		
			RECOMMENDED		
	Notes: 1 2 3 4 5 6 7 8 9 10		PUBLICATION		

CONTEXT: A61

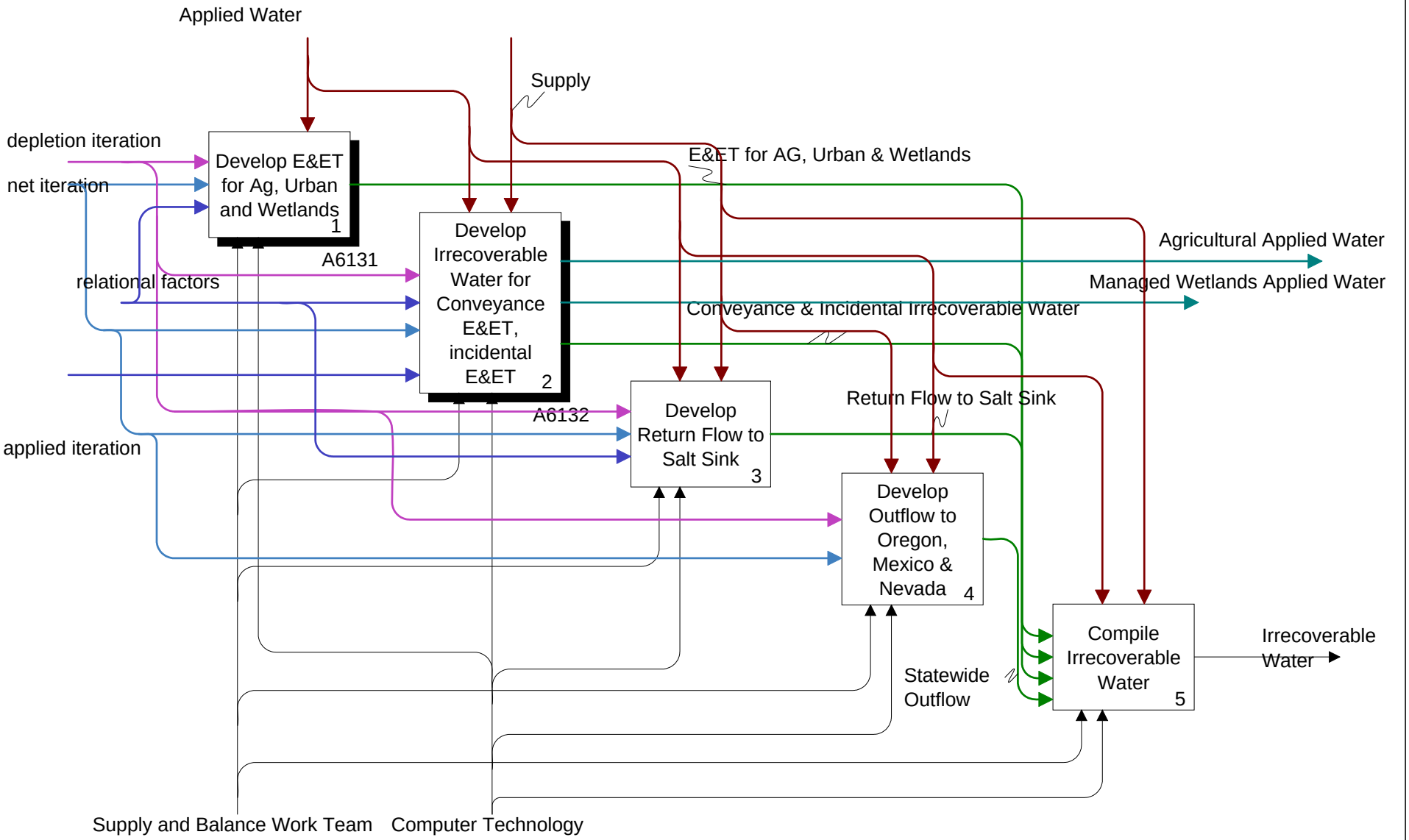

Node:	Title:	Number:
A613	Determine Irrecoverable Water	

Used At:	Author: Tipton	Date: 9/7/2007	WORKING	READER	DATE
	Project: Flow Diagram	Rev: 11/1/2007	DRAFT		
			RECOMMENDED		
	Notes: 1 2 3 4 5 6 7 8 9 10		PUBLICATION		

CONTEXT: A613

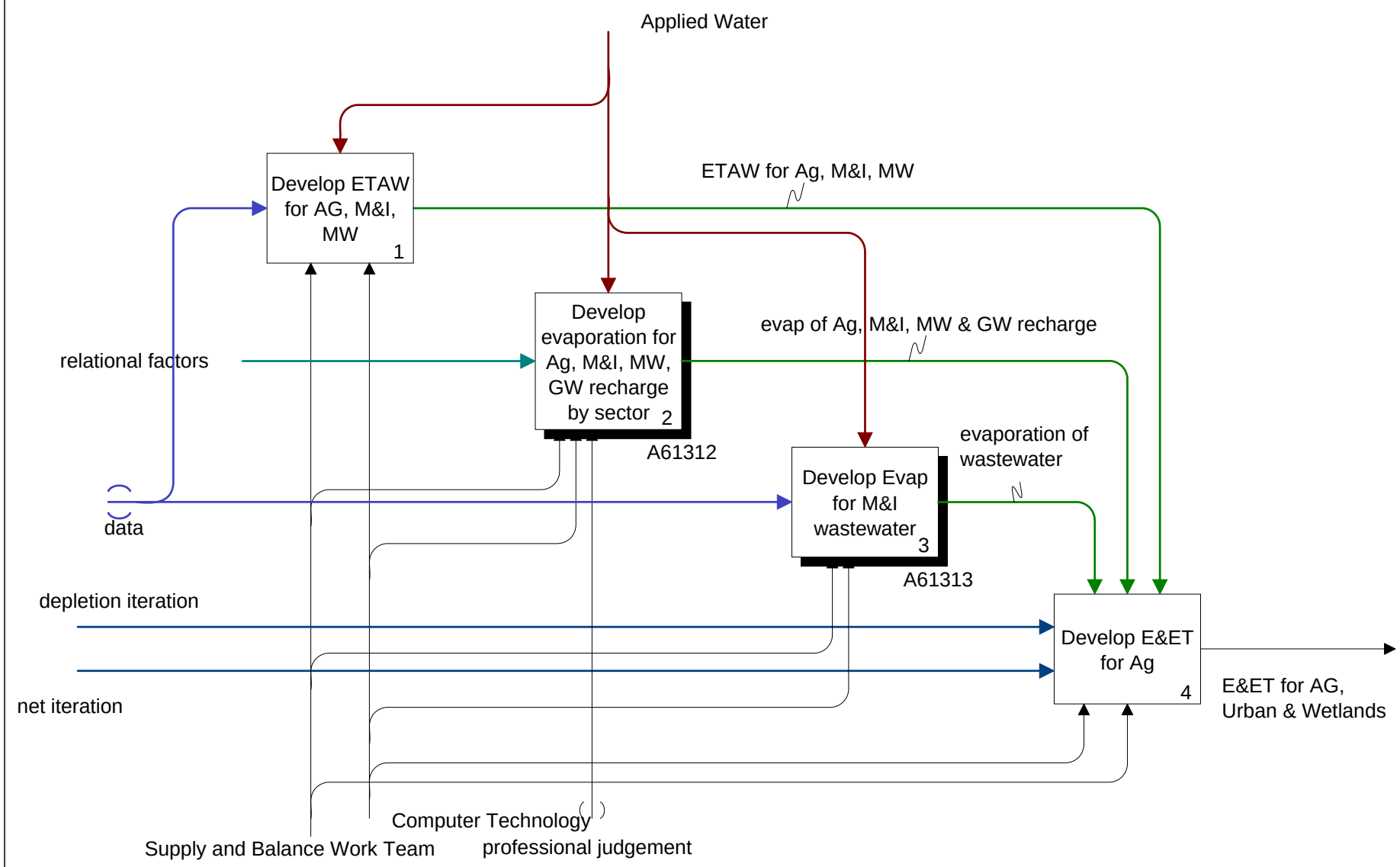

Node:	Title:	Number:
A6131	Develop E&ET for Ag, Urban and Wetlands	

Used At:	Author: Tipton	Date: 9/10/2007	WORKING	READER	DATE
	Project: Flow Diagram	Rev: 11/1/2007	DRAFT		
			RECOMMENDED		
	Notes: 1 2 3 4 5 6 7 8 9 10		PUBLICATION		

CONTEXT: A6131

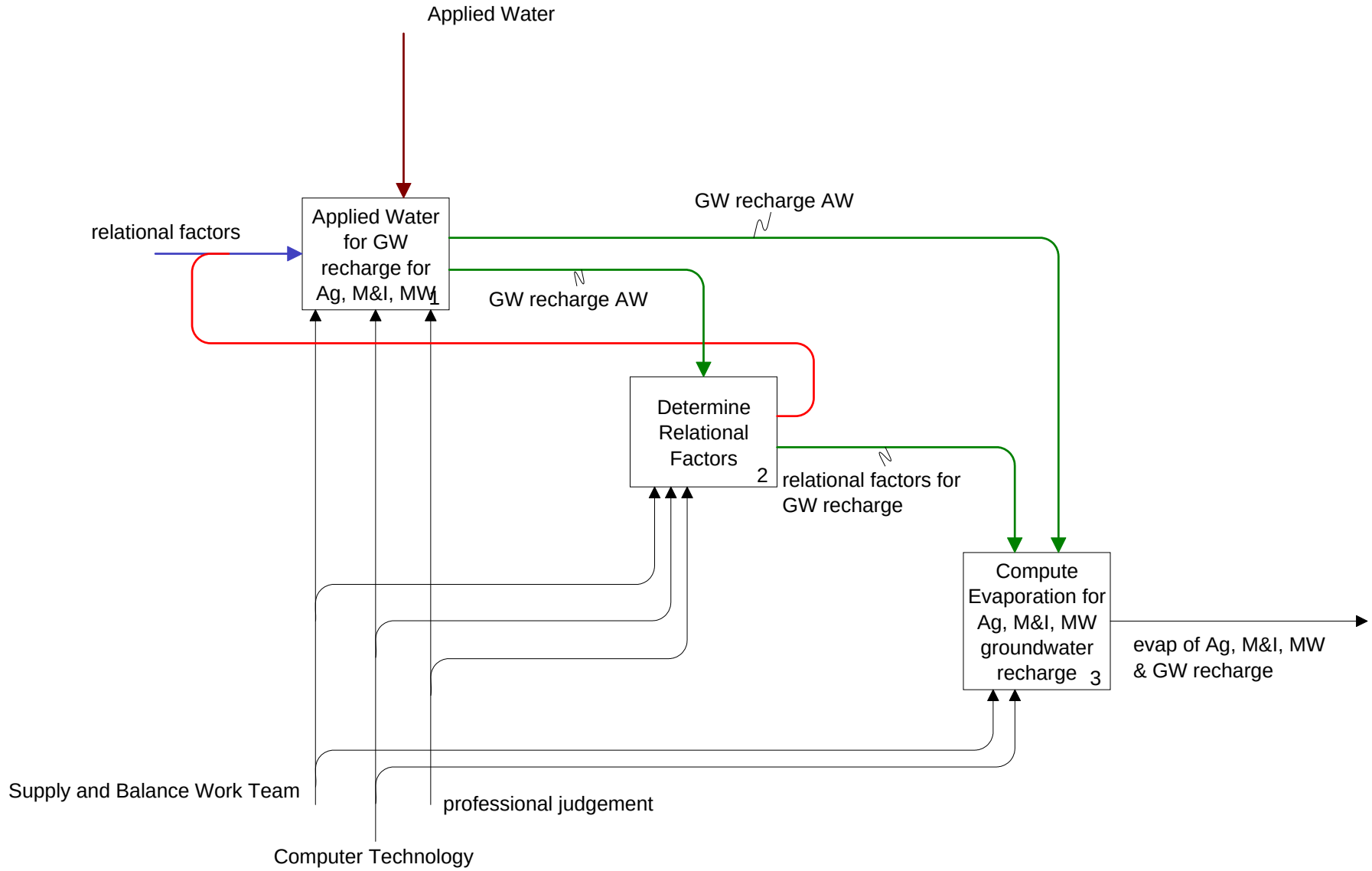

Node: A61312	Title: Develop evaporation for Ag, M&I, MW, GW recharge by sector	Number:

Used At:	Author: Tipton	Date: 9/10/2007	WORKING	READER	DATE
	Project: Flow Diagram	Rev: 11/1/2007	DRAFT		
			RECOMMENDED		
	Notes: 1 2 3 4 5 6 7 8 9 10		PUBLICATION		

CONTEXT: A6131

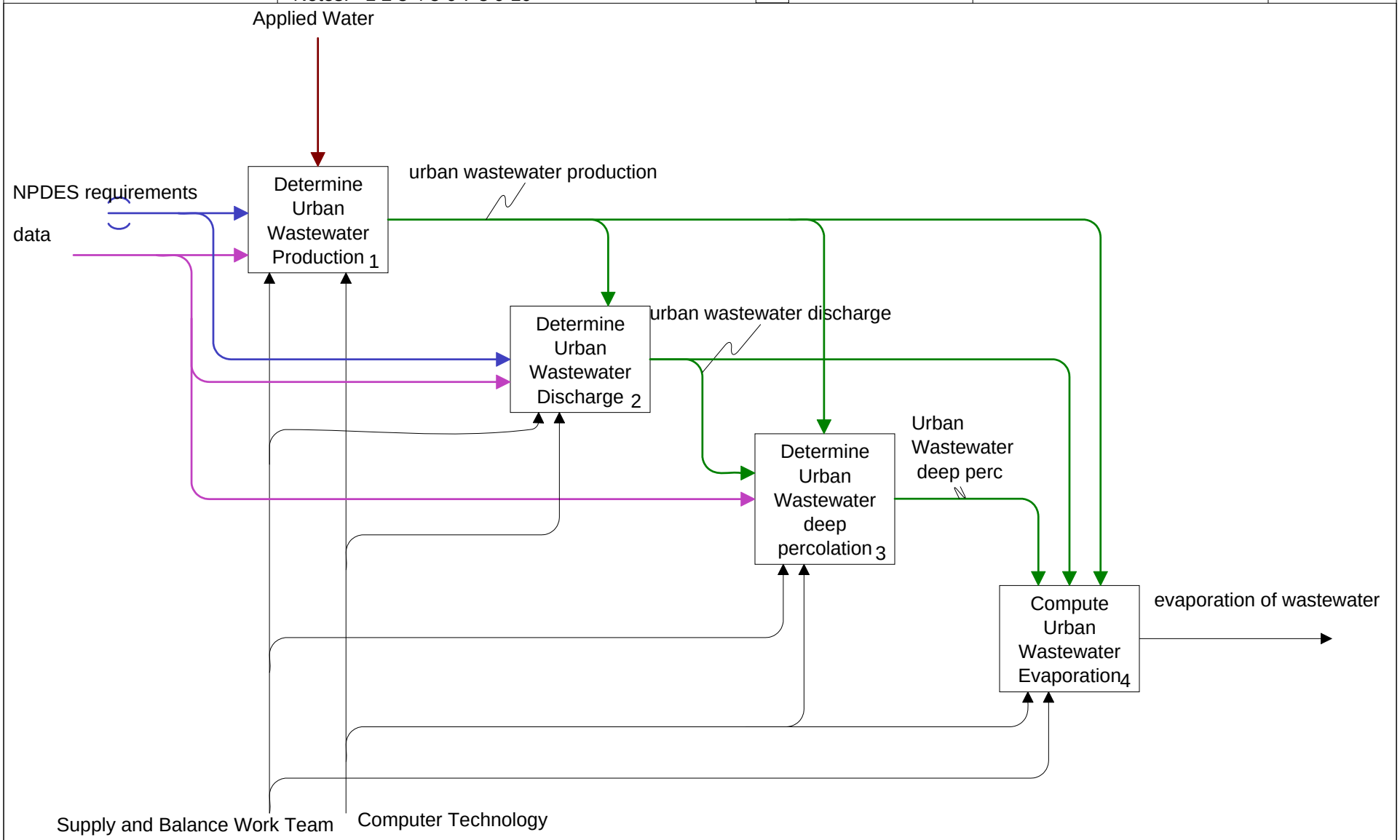

Node: A61313	Title: Develop Evap for M&I wastewater	Number:

Used At:	Author: Tipton	Date: 9/10/2007	WORKING	READER	DATE
	Project: Flow Diagram	Rev: 3/24/2010	DRAFT		
			RECOMMENDED		
	Notes: 1 2 3 4 5 6 7 8 9 10		PUBLICATION		

CONTEXT: A613

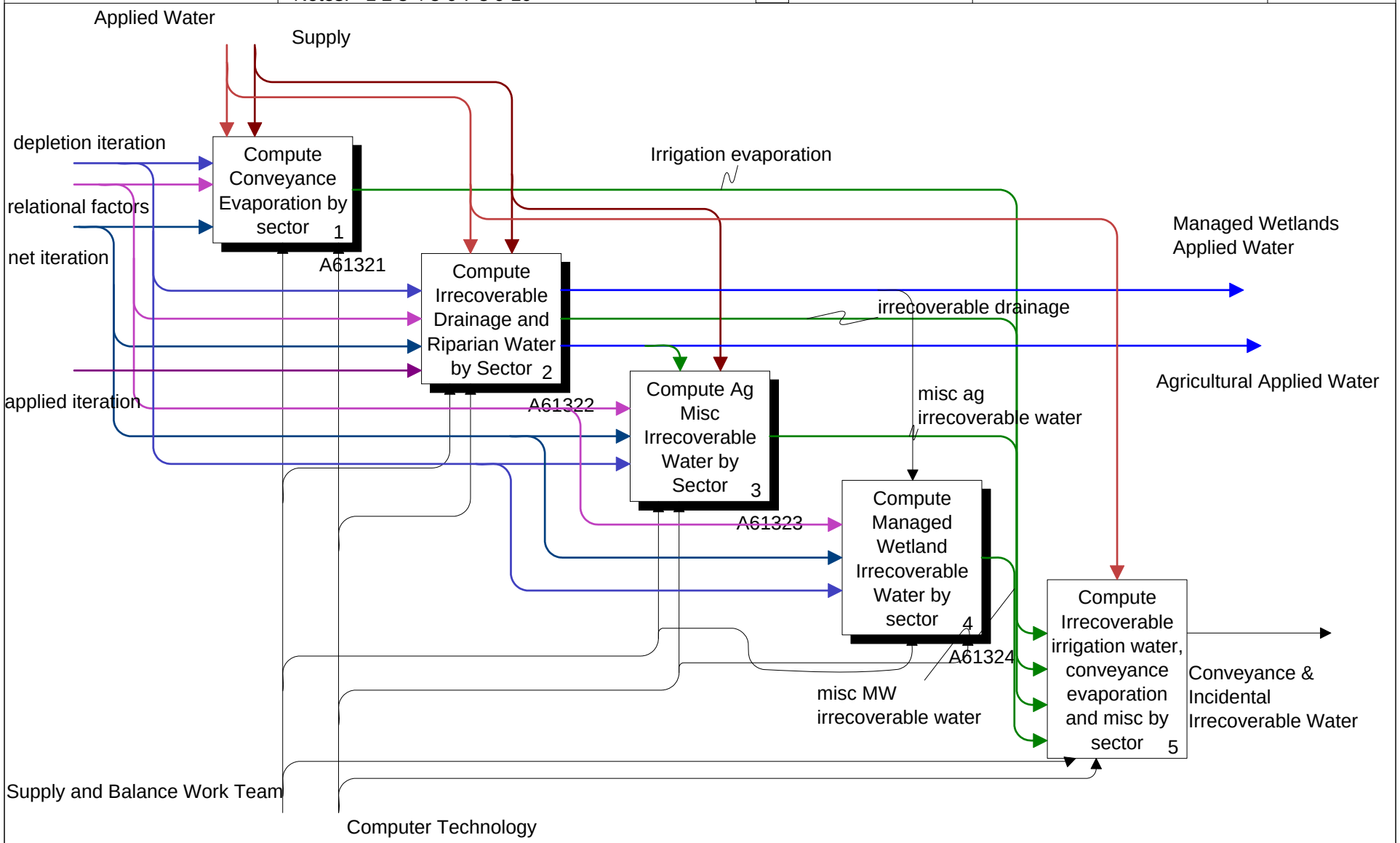

Node:	Title:	Number:
A6132	Develop Irrecoverable Water for Conveyance E&ET, incidental E&ET	

Used At:	Author: Tipton	Date: 9/10/2007	WORKING	READER	DATE
	Project: Flow Diagram	Rev: 3/24/2010	DRAFT		
			RECOMMENDED		
	Notes: 1 2 3 4 5 6 7 8 9 10		PUBLICATION		

CONTEXT: A6132

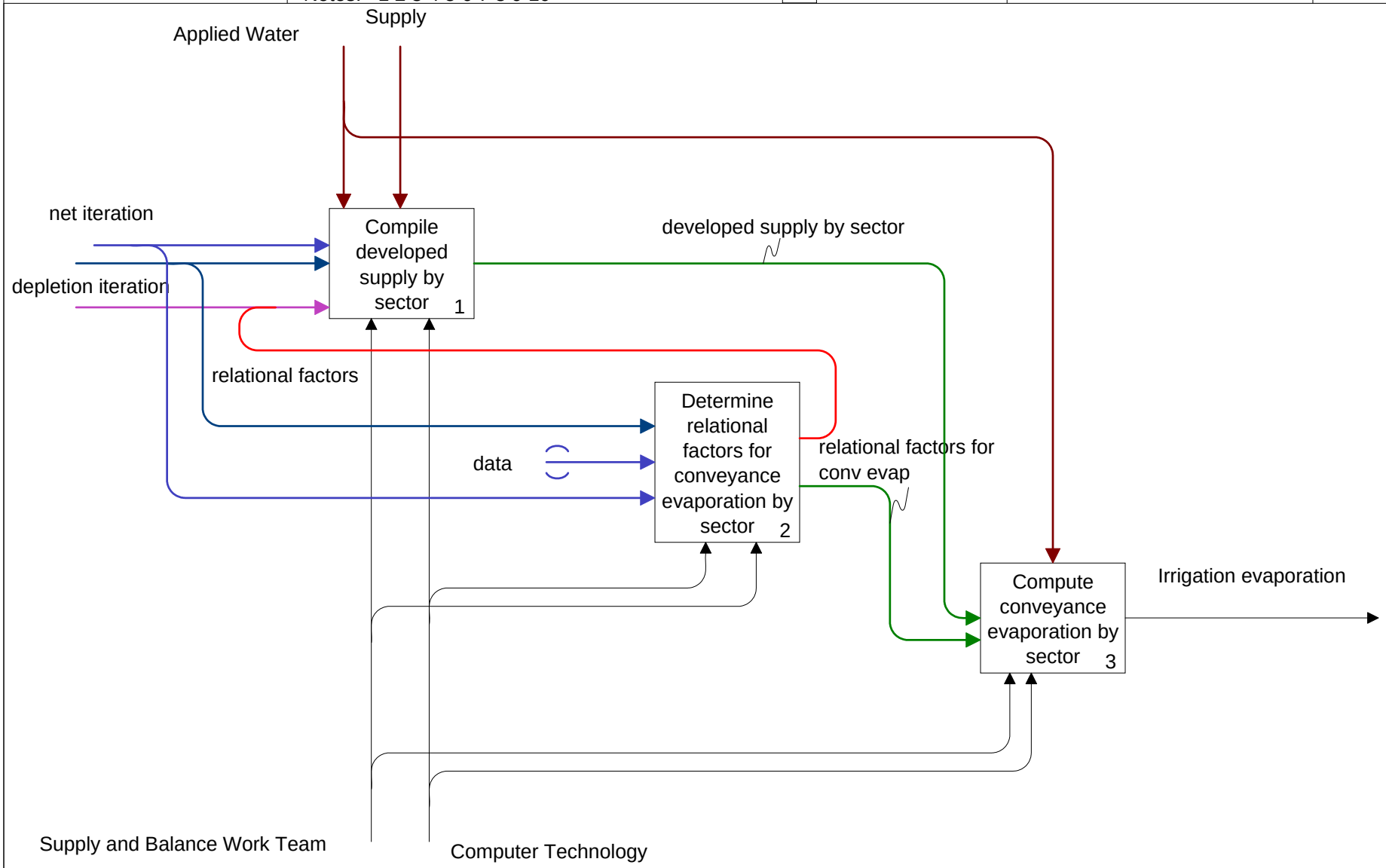

Node:	Title:	Number:
A61321	Compute Conveyance Evaporation by sector	

Used At:	Author: Tipton	Date: 9/10/2007	WORKING	READER	DATE
	Project: Flow Diagram	Rev: 3/24/2010	DRAFT		
			RECOMMENDED		
	Notes: 1 2 3 4 5 6 7 8 9 10		PUBLICATION		

CONTEXT: A6132

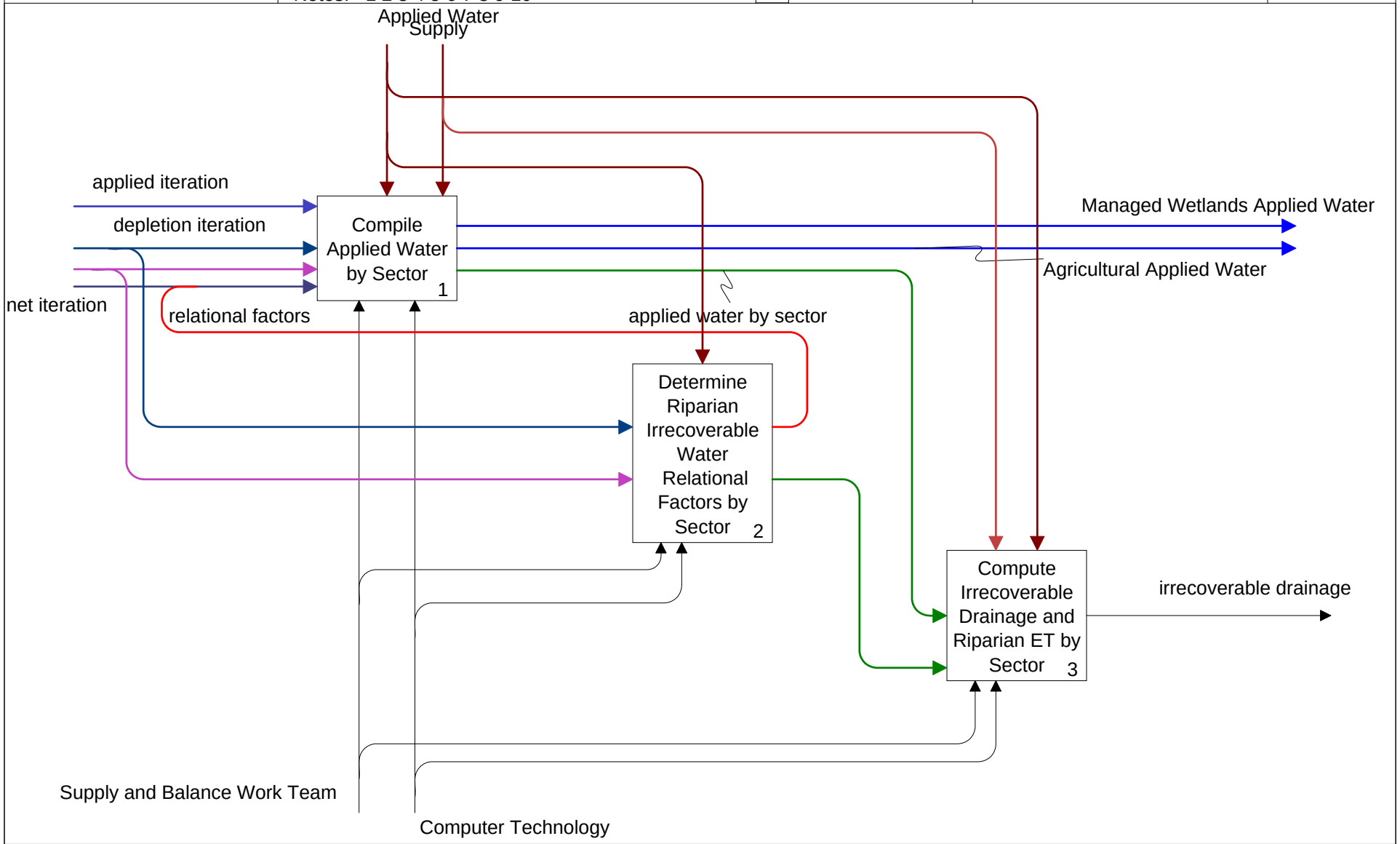

Node:	Title:	Number:
A61322	Compute Irrecoverable Drainage and Riparian Water by Sector	

Used At:	Author: Tipton	Date: 9/11/2007	WORKING	READER	DATE
	Project: Flow Diagram	Rev: 3/24/2010	DRAFT		
			RECOMMENDED		
	Notes: 1 2 3 4 5 6 7 8 9 10		PUBLICATION		

CONTEXT: A6132

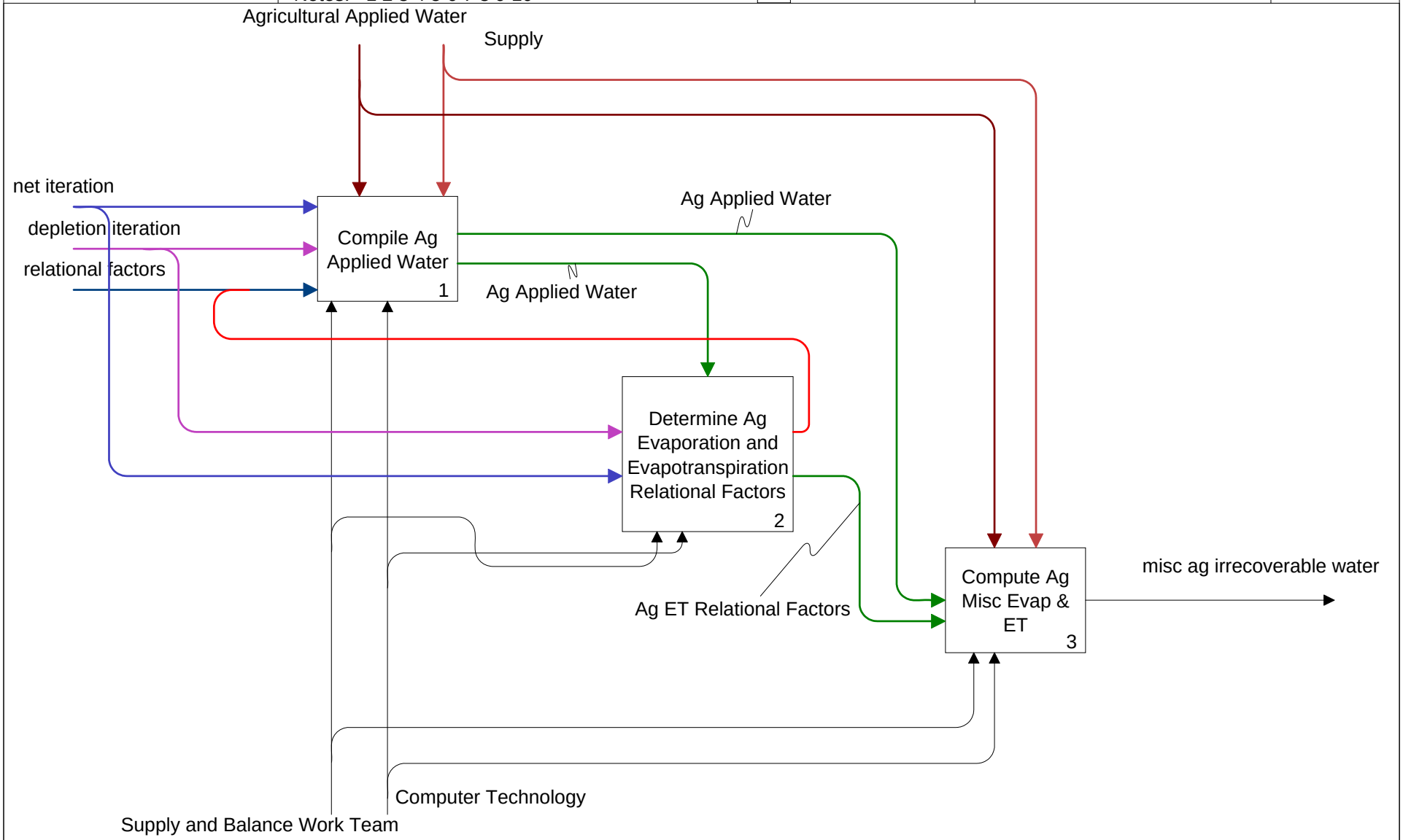

Node:	Title:	Number:
A61323	Compute Ag Misc Irrecoverable Water by Sector	

Used At:	Author: Tipton	Date: 9/11/2007	WORKING	READER	DATE
	Project: Flow Diagram	Rev: 3/24/2010	DRAFT		
			RECOMMENDED		
	Notes: 1 2 3 4 5 6 7 8 9 10		PUBLICATION		

CONTEXT:

A6132

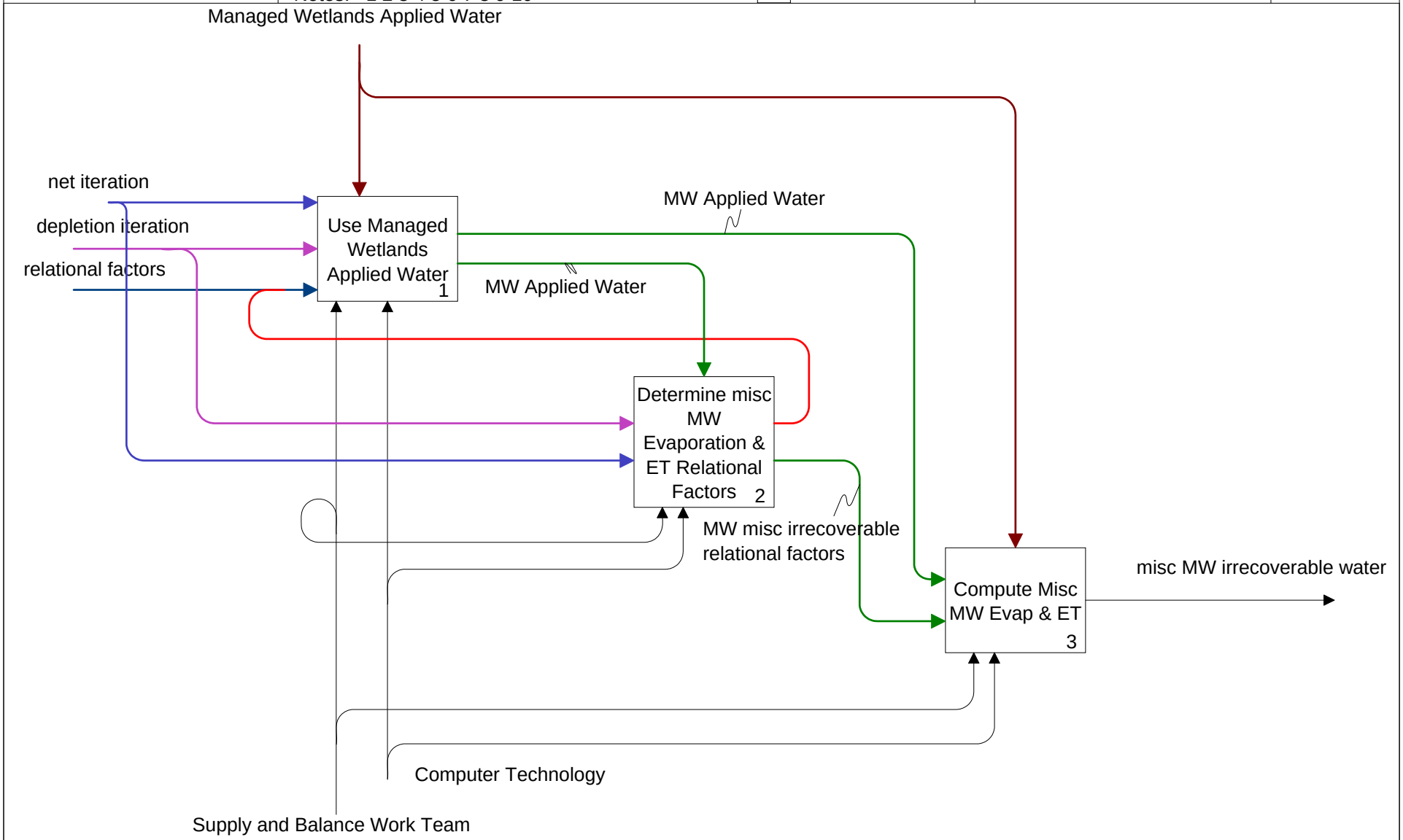

Node:	Title:	Number:
A61324	Compute Managed Wetland Irrecoverable Water by sector	

Used At:	Author: Tipton	Date: 12/10/2001	WORKING	READER	DATE
	Project: Flow Diagram	Rev: 12/10/2001	DRAFT		
			RECOMMENDED		
	Notes: 1 2 3 4 5 6 7 8 9 10		PUBLICATION		

CONTEXT: A6

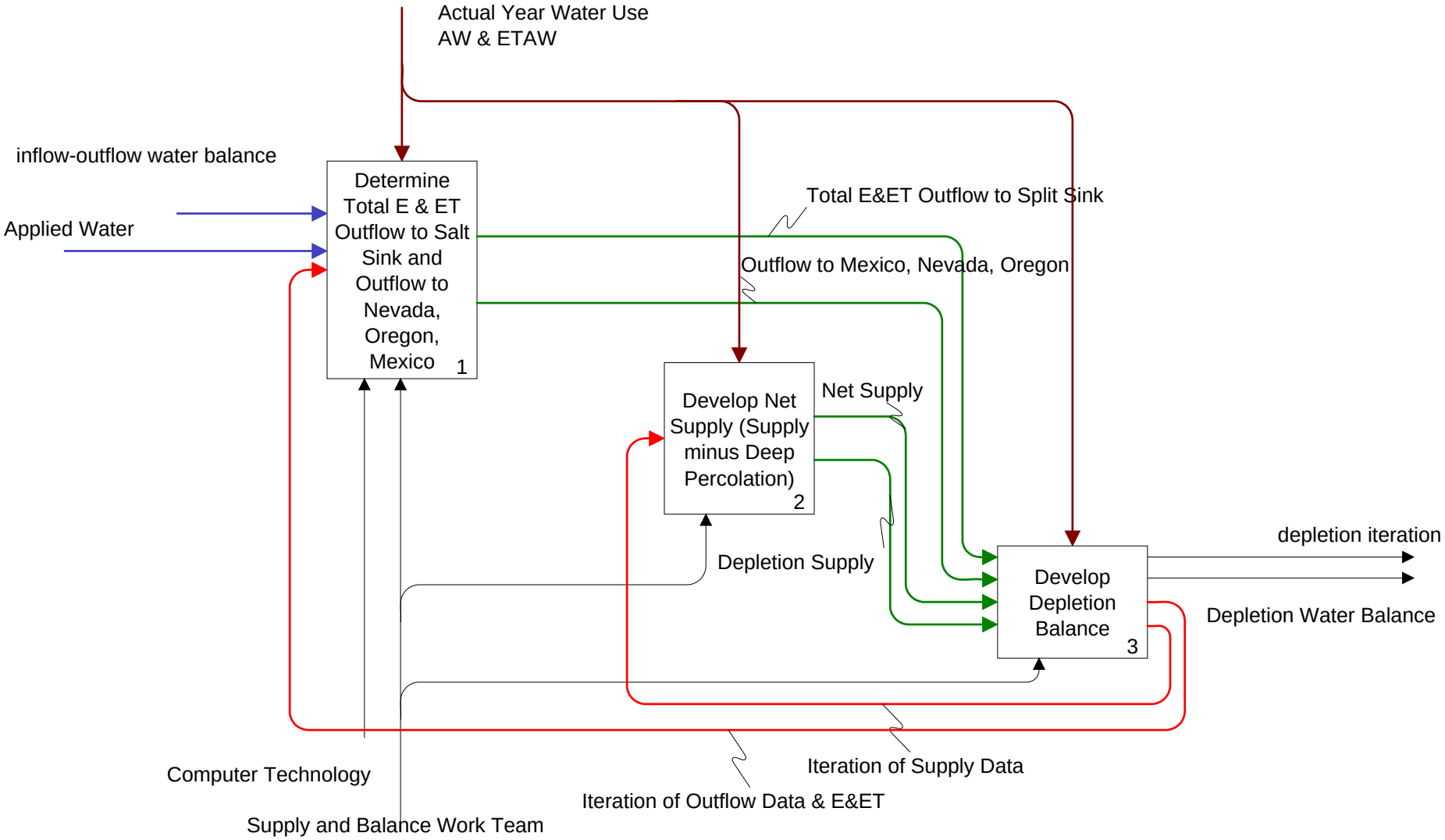

Node:	Title:	Number:
A62	Apply Depletion Water Balance	

Used At:	Author: Tipton	Date: 12/10/2001	WORKING	READER	DATE
	Project: Flow Diagram	Rev: 11/1/2007	DRAFT		
			RECOMMENDED		
	Notes: 1 2 3 4 5 6 7 8 9 10		PUBLICATION		

CONTEXT: A6

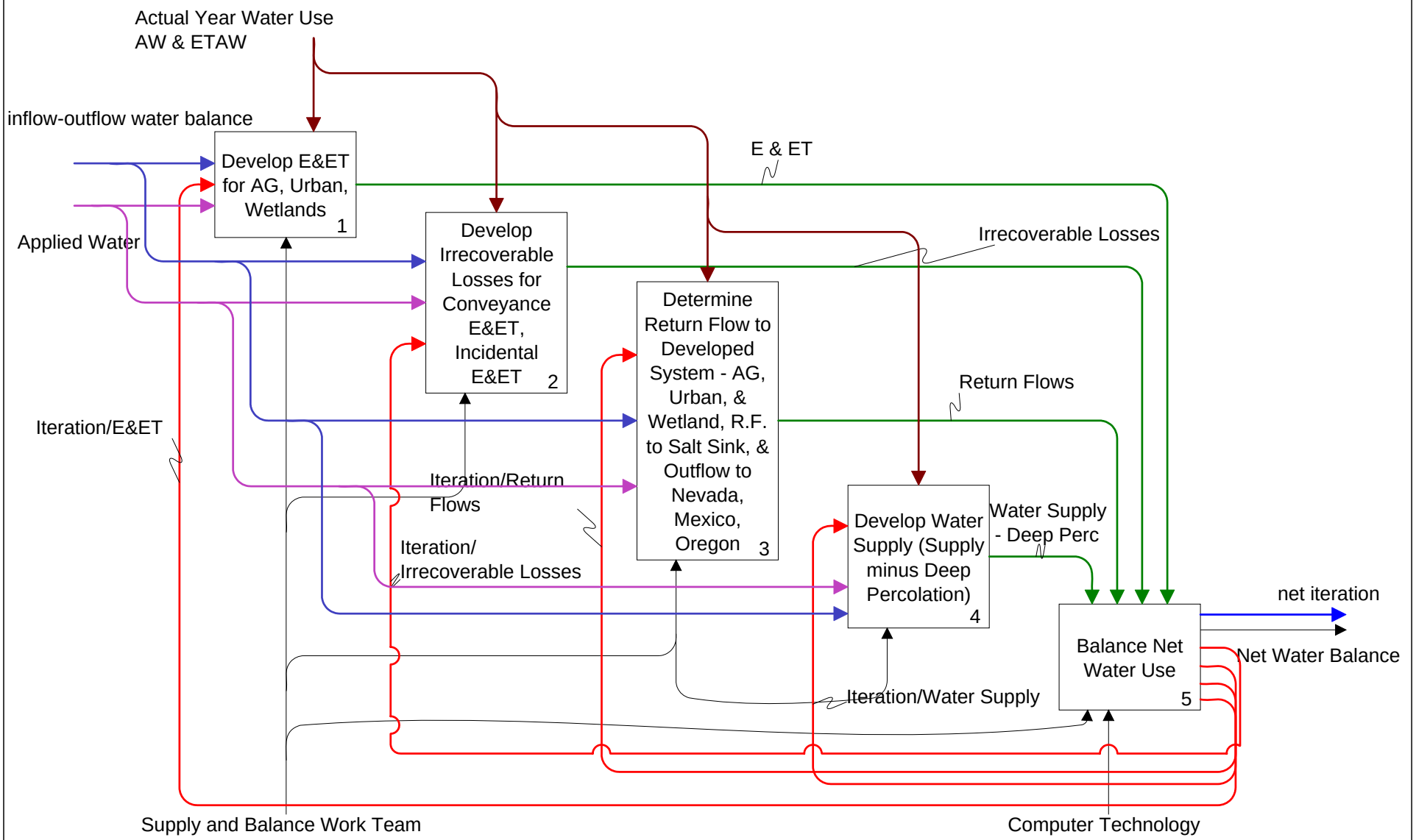

Node:	Title:	Number:
A63	Apply Net Water Balance	

Used At:	Author: Tipton	Date: 12/10/2001	WORKING	READER	DATE
	Project: Flow Diagram	Rev: 3/24/2010	DRAFT		
			RECOMMENDED		
	Notes: 1 2 3 4 5 6 7 8 9 10		PUBLICATION		

CONTEXT: A6

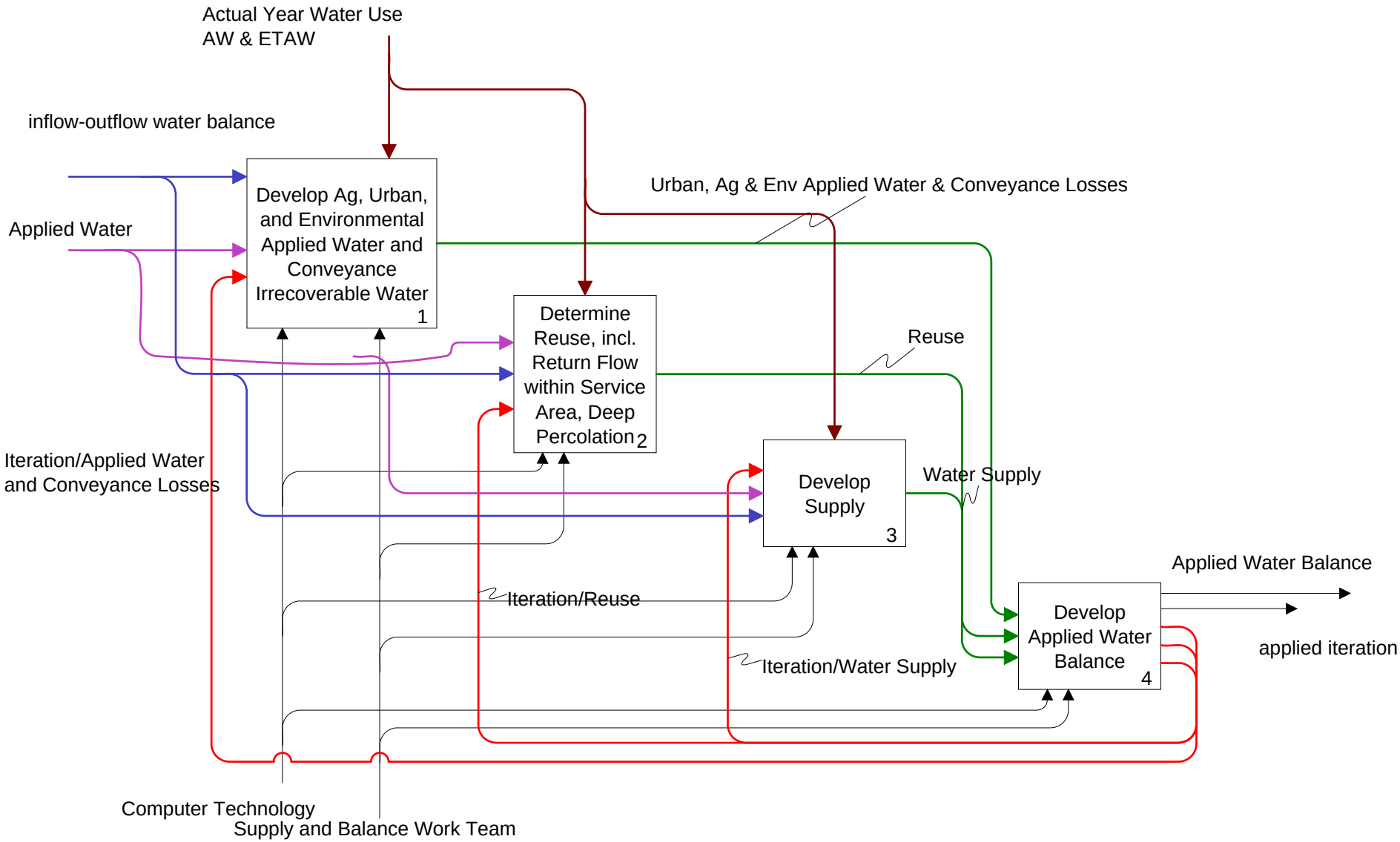

Node: A64	Title: Apply Applied Water Balance	Number:

\\rio\share\Portfolio\Update_2009\Update_2009_IDEF0\flow diagram(3-24-2010).igx

+ **Run Setup**

+ **Generators**

+ **Resources**

+ **Calendars**

+ **Initialization**

+ **Functions**

+ **Monitors**

Elapsed Time

Transaction Statistics

Transaction Statistics

Activity Statistics