Section A

Agricultural Water Use Efficiency Implementation Projects Application Outline

Due January 11, 2005, by 3 pm

Section B-15a, Project Information Form

Applying for:

1. (Section A) **Urban or Agricultural Water Use Efficiency Implementation Project**
   - ❑ Urban ☑ Agricultural
   - ❑ (a) implementation of Urban Best Management Practice, #_____
   - ❑ (b) implementation of Agricultural Efficient Water Management Practice, #_____
   - ☑ (c) implementation of other projects to meet California Bay-Delta Program objectives, Targeted Benefit # or Quantifiable Objective #, if applicable #6, 7, and 8
   - ❑ (d) Specify other: _____
2. (Section B) **Urban or Agricultural Research and Development; Feasibility Studies, Pilot, or Demonstration Projects; Training, Education or Public Information; Technical Assistance**
   - ❑ (e) research and development, feasibility studies, pilot, or demonstration projects
   - ❑ (f) training, education or public information programs with statewide application
   - ❑ (g) technical assistance
   - ❑ (h) other
3. Principal applicant (Organization or affiliation): Anderson-Cottonwood Irrigation District
4. Project Title: ACID Main Canal Modernization Project to Partially Address CALFED Quantifiable Objectives 6 and 7
5. Person authorized to sign and submit proposal and contract

Name, title	Dee Swearingen
	General Manager
Mailing address	2810 Silver St.
	Anderson, CA 96007-4297
Telephone:	530/365-7329
Fax	
E-mail	

6. Contact person (if different):

Name, title	Same as above
Mailing address	
Telephone:	
Fax	
E-mail	

7. Grant funds requested (dollar amount): *(from Table C-1, column VI)*	Up to $10.9 million – Project can be phased and implemented as funds are available
8. Applicant funds pledged (dollar amount):	$200,000 in kind services
9. Total project costs (dollar amount): *(from Table C-1, column IV, row n)*	$11.1 million
10. Percent of State share requested (%) *(from Table C-1)*	99%
11. Percent of local share as match (%) *(from Table C-1)*	1% – disadvantaged community
12. Is your project locally cost effective?	
Locally cost effective means that the benefits to an entity (in dollar terms) of implementing a program exceed the costs of that program within the boundaries of that entity.	❑ (a) yes
(If yes, provide information that the project in addition to Bay-Delta benefit meets one of the following conditions: broad transferable benefits, overcome implementation barriers, or accelerate implementation.)	☑ (b) no Greater benefit to in-basin and out-of-basin downstream users by creating greater system flexibility and generating water savings
13. Is your project required by regulation, law or contract?	
If no, your project is eligible.	❑ (a) yes
If yes, your project may be eligible only if there will be accelerated implementation to fulfill a future requirement and is not currently required.	☑ (b) no
Provide a description of the regulation, law or contract and an explanation of why the project is not currently required.	

14. Duration of project (month/year to month/year):	December 2005 to May 2007❑
15. State Assembly District where the project is to be conducted:	District 2
16. State Senate District where the project is to be conducted:	District 4
17. Congressional district(s) where the project is to be conducted:	District 2
18. County where the project is to be conducted:	Shasta
19. Location of project (longitude and latitude)	40° 26' 49", -122° 17' 58
20. How many service connections in your service area (urban)?	Not applicable to this application
21. How many acre-feet of water per year does your agency serve?	122,000 ac-ft (negotiated 2005 setttlement contract amount)

22. Type of applicant (select one):	❑ (a) City ❑ (b) County ❑ (c) City and County ❑ (d) Joint Powers Authority ☑ (e) Public Water District ❑ (f) Tribe ❑ (g) Non Profit Organization ❑ (h) University, College ❑ (i) State Agency ❑ (j) Federal Agency ❑ (k) Other ❑ (i) Investor-Owned Utility ❑ (ii) Incorporated Mutual Water Co. ❑ (iii) Specify _____
23. Is applicant a disadvantaged community? If 'yes' include annual median household income. (Provide supporting documentation.)	☑ (a) yes, $34,335 (1999) median household income (from the US Census Bureau, web-site provided below) ❑ (b) no http://quickfacts.census.gov/qfd/states/06/06089.html

Section A-15b, Signature Page

By signing below, the official declares the following:

The truthfulness of all representations in the proposal;

The individual signing the form has the legal authority to submit the proposal on behalf of the applicant;

There is no pending litigation that may impact the financial condition of the applicant or its ability to complete the proposed project;

The individual signing the form read and understood the conflict of interest and confidentiality section and waives any and all rights to privacy and confidentiality of the proposal on behalf of the applicant;

The applicant will comply with all terms and conditions identified in this PSP if selected for funding; and

The applicant has legal authority to enter into a contract with the State.

Signature	Name and title	Date
	DEE E. SWEARINGEN GENERAL MANAGER	01-10-05

Section A-15c, State of Work

Section 1: Relevance and Importance

Project Objective: *To implement in phases (as funding allows) the recommendations of the Phase 1a ACID Main Canal Modernization Feasibility Study to modernize and automate the ACID Main Canal resulting in increased system efficiencies and an estimated water savings of up to 19,000 ac-ft*

Background

The Anderson-Cottonwood Irrigation District

Service Area and Distribution System

ACID's service area encompasses approximately 32,000 acres and extends south from the City of Redding within Shasta County to northern Tehama County, encompassing the City of Anderson and the town of Cottonwood (Attachment 1). Although ACID overlaps the service area boundaries of these water purveyors, the District does not currently provide water for M&I uses in these communities. Approximately 90 percent of ACID's customers irrigate pasture for haying or livestock; however, some orchard and other food crops are also grown. In total, ACID's service area accounts for about two-thirds of all irrigated pasture in the Redding Basin.

ACID uses a rotation schedule to deliver irrigation water to District customers. Very little groundwater is used within the District for agricultural purposes, except occasionally during drought years. ACID's facilities and irrigation are significant contributors to groundwater recharge in the Redding Basin. Annual seepage associated with the ACID Main Canal is estimated to be approximately 44,000 ac-ft.

ACID's water supply is diverted from the Sacramento River near Redding. Water is pooled behind the District's seasonal dam and gravity fed through a fishscreen, tunnel, and ultimately into the Main Canal. The dam's fish ladders and fish screen were replaced in 2001 as part of a CALFED-funded effort to enhance the Sacramento River anadromous fishery. The distribution system designed in 1915 includes unlined canals, laterals, sublaterals, drains, inverted siphons, and pumping plants. A flume, which carried water across the Sacramento River to the Churn Creek Bottom area, is no longer in operation and was replaced with a pumping plant in the 1940s.

Several wasteways are located along the canal route at creek crossings and natural drains. These wasteways return water to the river or local streams when flow exceeds the capacity of the canal, which; when it occurs, is typically in the winter months during storm runoff. Additionally, the District operates five pumping plants that recapture some return flows. A portion of the Main Canal is concrete- or gunite-lined, some automatic gate controls are being installed, and the District has a continuing program of replacing farm laterals with pipe. ACID currently maintains agreements with the City of Redding, Anderson, and Caltrans to accept stormwater-related flows on an as-needed basis.

Agricultural Land Use

Land use within ACID's service area is primarily pasture, in addition to alfalfa and some deciduous orchard crops. Pasture use is typically in the range of 75 percent of the total crop mix served by the District (DWR, Northern District). Water requirements are typically highest during the summer months (June, July, and August) due to the area's hot, dry climate. Little groundwater is used across the District, although a Groundwater Management Program is being developed and to date 12 dual completion groundwater monitoring wells have been installed within District boundaries with another monitoring well expected to be installed by Summer 2005. The small portion of groundwater that is used is limited primarily to deciduous crops and is pumped by privately owned wells. Annual cropping patterns have not varied a great deal since the mid-1970s. Associated on-field crop water requirement needs and diversions have therefore been more a function of water-year type and climate than changes in cropping.

Municipal and Industrial Use

ACID's service area overlays several municipal water purveyors, but the District currently does not serve any major M&I users. Many of these users are projecting increased demands in the year 2020. DWR estimates growth in the M&I sector in the vicinity of ACID to result in an increased annual water requirement of approximately 30,000 ac-ft by the year 2020, which would represent an increase of about 75 percent (DWR, Northern District). A majority of the increase is assumed to be met by surface water taken from the Sacramento River**.** The District is currently exploring programs that would increase supply to these purveyors.

Examples of programs include direct supply to water treatment facilities, direct supply for municipal irrigation, provision of water for cooling buildings and industrial developments, water marketing, and assisting with the fulfillment of area of origin needs. The District is currently working with following entities to identify their potential requirements:

- City of Shasta Lake (to meet long-term growth projections)
- Bella Vista Water District
- Anderson Union High School (use of District water for cooling operations)
- City of Redding (potential South Bonnyview water treatment plant utilizing ACID supplies)

In addition to these potential M&I demands, the District is currently participating in the Phase 3 of the Shasta County Water Resources Master Plan, which is assessing needs in the year 2030. Additional demands, as well as the potential for water transfers, may arise during the process of formulating the plan.

Environmental Use

Approximately 3,000 acres of riparian vegetation are estimated to be incidentally supplied by irrigation associated with delivery laterals or adjacent lands (Shasta County Water Agency, October 1997). The application of water to pasture lands (historically ranging from 10,000 to 12,000 acres) and associated vegetation provides habitat to common and special-status terrestrial and avian species that use such habitat. Additionally, pasture provides habitat for a number of species of small mammals, ground-dwelling birds, and reptiles and amphibians, all of which provide a prey base for predatory birds. Dryland pasture in the region often supports a vernal pool ecosystem that is occupied by a number of special-status plant and animal species.

Project Definition—Modernization of ACID's Main Canal

Overview of Project Intent and Objectives

The District proposes to construct 17 new automated flow control and measurement structures using a centralized control facility along the ACID Main Canal and major laterals in an effort to continuously control and monitor system flows to increase water use efficiency (Attachment 2). The project also includes lining critical canal sections with high seepage rates to reduce seepage losses.

Project Need

The District diverts water from the Sacramento River in Redding, California, primarily from a gravity diversion in the river at the seasonal ACID diversion dam in Redding. The District also operates a pump station on the river several miles downstream to supply a lateral canal. ACID's distribution system includes approximately 35 miles of Main Canal, about 98 percent of which is unlined. The Main Canal flows through six inverted siphons to cross streams, such as Clear Creek, and also three flume sections across smaller streams and lowland areas. Several wasteways are located along the canal route, which return water to the Sacramento River and local streams when flow exceeds the capacity of the canal.

The District is unmetered and has flow measurement capabilities at only one location on the Main Canal. Water management has historically been limited to management of the headgate near the river and manual control structures downstream, with surpluses spilling at the various wasteways. Also, canal seepage is significant in certain sections near natural creek and drainage channels where soils are fast draining and the canal contributes directly to the underlying groundwater basin.

The project includes two components: installing the control and measurement facilities and lining sections of the canal to achieve the goals and objectives of improved water management and reduce seepage losses. These objectives are compatible with **CALFED Quantifiable Objectives 6 and 7 for Sub-Region 1 (Redding Basin).** Methods to be implemented include installing flow measurement devices, water control facilities, and telemetry along the Main Canal and lining critical sections of the Main Canal. Project procedures will include CEQA and NEPA compliance, provision for public participation, and long-term monitoring. The expected outcomes of the project include preliminary and final design, permitting and environmental documentation, construction, operation, and monitoring. The estimated $10.9 million project is anticipated to provide greatly improved ability to manage the District's supply and reduced seepage losses, potentially saving 20,000 acre-feet per year.

Project Goals and Objectives

The proposed project was identified in the Short-term Workplan developed as part of the Sacramento Valley Water Management Agreement (Agreement). This unprecedented agreement was developed by Sacramento Valley water users, export interests, the California Department of Water Resources (DWR), and U.S. Bureau of Reclamation (USBR) as an alternative to a potentially contentious process within Phase 8 of the State Water Resources Control Board (SWRCB) Bay-Delta Water Rights Hearings. The intent of the Agreement is to establish a framework to meet water supply, water quality, and environmental needs through a cooperative project development process. Each of the water system improvement projects evaluated under

the Agreement, including the project described herein, would provide benefits toward achieving at least one of four quantifiable objectives:

- Provide flow to improve aquatic ecosystem conditions
- Decrease nonproductive evapotranspiration (ET)
- Provide long-term diversion flexibility to increase the water supply for beneficial uses
- Reduce salinity to enhance and maintain beneficial uses of water

The District proposes to construct 17 new automated flow control and measurement structures with telemetry along the ACID Main Canal and major laterals to continuously control and monitor system flows to increase water use efficiency. Also, the project would include lining critical canal sections with high seepage to reduce seepage losses. The District diverts water from the Sacramento River in Redding, California, primarily from a gravity diversion in the river at the seasonal ACID diversion dam in Redding. The District also operates a pump station on the river several miles downstream to supply a lateral canal. ACID's distribution system includes approximately 35 miles of Main Canal, about 98 percent of which is unlined. The Main Canal flows through six inverted siphons to cross streams, such as Clear Creek, and also three flume sections across smaller streams and lowland areas. Several wasteways are located along the canal route, which return water to the Sacramento River and local streams when flow exceeds the capacity of the canal. The District is unmetered and has flow measurement capabilities at only one location on the Main Canal. Water management has historically been limited to management of the headgate near the river and manual control structures downstream, with surpluses spilling at the various wasteways. Also, canal seepage is significant in certain sections near natural creek and drainage channels where soils are fast draining and the canal contributes directly to the underlying groundwater basin. The goals and objectives of the two-component project are to facilitate improved water management and reduce seepage losses.

Project Need

This project is needed to restore original delivery capacity, improve water supply reliability, eliminate conveyance losses within the project area, and increase efficiency of irrigation delivery method. Therefore, it will provide water conservation benefits consistent with the following primary CALFED objective:

- Reduce the mismatch between Bay-Delta water supplies and current and projected beneficial uses dependent on the Bay-Delta system

Additionally, the proposed project will be consistent with the following specific objectives of the CALFED Water Use Efficiency Program[1]:

- Reduce existing irrecoverable losses
- Achieve multiple benefits
- Preserve local flexibility
- Use incentive-based actions over regulatory actions
- Build on existing water conservation and management programs

[1] CALFED Bay-Delta Program. 1999. *Water Use Efficiency Program*. Revised Draft, February 1999.

Consistency with CALFED ROD

CALFED's Water Use Efficiency (WUE) Program and Quantifiable Objectives (QO) are intended to help ensure that California's water is used efficiently and provides multiple benefits. The proposed project will contribute directly to Sub-Region 1 (Redding Sub-basin) QOs 6 and 7 by reducing Sacramento River diversions and reducing spillage and seepage from the ACID Main Canal, respectively. CALFED has not defined Priority Outcomes for the Sacramento River in Sub-Region 1.

Consistency with Regional Water Management

Local Water Management Initiatives. ACID is one of 14 Redding Area Water Council (RAWC) members working on a regional plan to solidify the Basin's water resources through 2030. This proposal is consistent with the plan; it will help to quantify water requirements at key District locations and provide better information on seepage rates from the District's unlined canals. Data from monitoring ACID's system will help to enhance the RAWC surface-water/groundwater model and evaluate future water management options.

Basin-wide Water Management Plan. ACID is among the Sacramento Valley Settlement Contractors who are partners with the USBR in developing the Sacramento River Basin-wide Water Management Plan (BWMP) with the assistance of the DWR. This proposed project would implement some of the water use efficiency recommendations of the BWMP.

Sacramento Valley Water Management Agreement. The project also is an outgrowth of the Sacramento Valley Water Management Agreement reached in April 2001 among more than 100 organizations. The Agreement was reached as part of Phase 8 of the SWRCB Bay-Delta Water Rights Hearings by the Sacramento Valley water users, the DWR, USBR, and export water users. The Agreement is consistent with other water management activities and provides for managing water in a way that meets water supply, water quality, and environmental needs throughout the Sacramento Valley and the State of California.

California Public Policy. The California Constitution and California Water Code prohibit "waste or unreasonable use" of water and exclude from water rights any water that is not reasonably required for beneficial use. The SWRCB places water conservation conditions on water rights permits that it approves.

Central Valley Project Improvement Act and State Water Project Policy. The Central Valley Project Improvement Act **(**CVPIA) calls for water conservation criteria to promote the "highest level of water use efficiency reasonably achievable by project contractors." Some State Water Project (SWP) contracts include conservation requirements, and some water rights granted to the SWP by the SWRCB include specific conservation requirements.

Implementation of Existing Water Management Activities

Implementation of this proposed feasibility study would be consistent with past and on-going ACID water management efforts as described in the above text. To summarize, this feasibility study would support the

- CALFED ROD
- Sacramento Valley Water Management Program

- Basinwide Water Management Plan
- Redding Area Water Council activities
- CalPoly research and experiments

Section A-15d, Statement of Work

Section 2: Technical/Scientific Merit and Feasibility

Technical Feasibility

Site Selection

Locations of the 17 proposed structures have been plotted and are shown on Attachment 2. The locations of these structures are mainly from District recommendations. Two new siphons have been proposed: one at the existing Olney Creek Crossing and the other at the existing Crowley Gulch Crossing. Four check structures are proposed. These check structures will be located at Crowley Gulch, Schmeider Gulch, near Anderson High School, and near the Churn Creek Lateral. Measurement devices constructed adjacent to new check structures have been proposed. Twelve existing turnouts will be modified to include automation and measurement. Other improvements to the canal include canal lining, which is to be located in areas as shown on Attachment 2.

Main Canal Control Structures

Check structures are generally used to regulate flow in canals and maintain a minimum pool elevation upstream of the check, to assure proper turnout operation. Check structures are usually spaced along the canal to maintain a 1- to 2-foot difference in water surface. Check locations may be dictated by the turnout delivery water surface requirements. If a check is required near a siphon, a drop structure, or a flume, it is economically advantageous to combine the check with the inlet transition. Check structures are also generally required where there is a change in canal geometry. The check structures in this project are proposed to be constructed at four locations: Churn Creek Lateral (near North Bonnyview Road), upstream of Clear Creek and Anderson Creek, and at Schmeider Gulch spillway.

Radial gates have been chosen for the check structures in this project. These structures will include emergency overflow walls that will bypass water around the radial gates without exceeding the canal lining freeboard. For passage of weeds and other debris, flow control notches are located within the overflow walls. Bulkhead grooves will be installed upstream and downstream of the gates for maintenance access when the canal is in operation. Sketches of two typical check structures applicable to this project are shown in Appendix F. Double-gated check structures (shown on Attachment 3) are recommended for the Churn Creek and Clear Creek locations. Single-gate structures (shown on Attachment 4) are recommended for the sites upstream of Anderson Creek and at Schmeider Gulch. Radial gates near the Redding Convention Center should be modified by replacing the lift motor.

Main Canal Measurement

An important function of an automated canal system is the ability to observe conditions, such as water level and flow. Currently, the District uses ditchriders to perform this observation. Ditchriders drive along the canal and check water levels and gate positions. By automating the canal system, District staff can observe conditions from a central control building. Water stage or

water level is perhaps the most useful and most common measurement taken in canal automation. It is used to determine if the canal is operating correctly and safely, and if sufficient water is available to meet the user demands.

Measurement flumes for earthen canals require a structure that contains the following basic elements: entrance to an approach channel, approach channel, converging transition, throat, diverging transition, stilling basin, and scour protection. Ramp flumes are recommended for this project because they are easy to form and install in existing channels and produce relatively low head losses. Ramp flumes can also tolerate relatively high submergence, especially with the addition of a diverging downstream ramp. A major advantage of the ramp flume is the ability to numerically calibrate the flume using post-construction dimension measurements. Another advantage of the ramp flume is that they can usually be installed in existing canal sections with minimal canal modification. Thus, construction errors or flume settlement can be better accounted for with these measurements. Pressure transducers, will be installed in stilling wells just upstream and downstream of the measurement flumes to record water levels. A typical ramp flume for the main canal is shown in Attachment 2. It is proposed that Main Canal measurement structures be placed in proximity to each check structure.

Automated Turnouts

Lateral and farm turnouts are usually constructed of single- or multiple-barrel concrete pipe or rectangular concrete box conduit. Measuring devices are generally constructed near turnouts or in combination with them. Vertical-lift cast-iron gates are usually used for the pipe-turnout control gates, which is the case for most turnouts on the ACID Canal. A typical turnout is shown on Attachment 7. It is anticipated that 12 existing turnouts will be modified for automation and measurement capabilities. Locations of these turnouts are shown on Attachment 2. These turnouts have been chosen based on the District’s experience with canal operations. Modifications to the structures will consist of replacing the inlet headwall, gate, and possibly the outlet structure. Automation of the turnout consists of adding a motorized gate operator and necessary electrical hardware. These motors will be controlled and monitored remotely.

Lateral Measurement

Turnouts that allow water to flow into a junction box at the outlet are best suited for a weir box measuring device. Weirs are one of the oldest, simplest, and most reliable structures used to measure water flow in canals and laterals (see Attachment 7). Weirs are excellent measuring devices because, for a weir of a specific size and shape with free-flow steady-state conditions and proper weir-to-pool relationships, only one depth of water can exist in the upstream pool for a given discharge. The critical components of weirs are easily inspected, and any improper operations can be easily detected and quickly corrected. Weirs can be used most effectively whenever a fall of about 0.5 foot or more is available in the lateral.

Turnouts that consist of an outlet connected to a single ditch will be best suited for a ramp flume measurement device. The flume, as shown on Attachment 8, will be constructed in the ditch prism and consists of a 3:1 approach ramp to a horizontal broad crest with a vertical faced drop back to the ditch invert. These types of flumes are easy to construct, produce relatively low head losses, and are able to tolerate high submergence. Ramp flumes should be placed 100 feet or 10 flume-throat widths below gate structures to assure straight uniform flow into the flume. Additional freeboard will be needed at the ditch upstream of the flume because of backwater affects of the flume. The ditch invert downstream of the flume crest should be dropped enough to

account for losses through the flume and to assure that the submergence limits are not exceeded for all possible operating conditions, which will be determined during future design phases.

Creek Crossings and Wasteways

Inverted siphons convey canal water under roads, streams, or other depressions within the canal alignment. The siphon shapes include box, trapezoidal, and pipe. The pipe or box siphon conduit is generally sized for velocities up to 8.0 feet per second. Velocities higher than this tend to increase the head loss and could damage the conduit if the water carries abrasive sediments. The trapezoidal section is sized for a velocity near the velocity in the canal to minimize head loss. The pipe siphon is frequently used because it is the most economical shape.

Pipe siphons are recommended for the proposed creek crossing structures in this project. The Olney Creek Siphon will replace an existing crossing that was operated to convey canal water above the creek bottom. Creek flows have historically been backed up behind this structure because of inadequate structure capacity. Unwanted spills from the canal have entered the creek, causing unnaturally high flows during dry summer months and in some cases resulting in false attraction and subsequent stranding of salmon in otherwise dry or warm-water streams. In 1994, a pre-design report for a new Olney Creek Siphon was completed to address the replacement of the crossing structure. Preliminary design included construction of a 9-foot-diameter siphon, which would carry canal water under the creek. The siphon was designed for 300 cfs with a maximum headloss of 0.5 foot. The spillway was designed for a flow of 50 cfs. The minimum depth of cover above the siphon in the creek bed was 4 feet. Attachment 9 and 10 show a typical siphon for 8-foot and larger diameter pipe. The pipe must be adequately buried at sites where earth and gravelly materials are present and where excessive scour during floods is not anticipated. The inlet and outlet structures design must accommodate appreciable changes in velocities that occur at these locations. These structures will minimize head losses and prevent erosion damage to the canal banks. The locations of inlet and outlet structures are also critical points for piping and percolation that could result in serious damage to the siphon.

Crowley Gulch has also historically flooded because of inadequate capacity in the existing crossing structure. Excessive stormwater inflow to the canal once caused the canal water to overtop the banks and flood areas near Interstate 5. The proposed siphon at Crowley Gulch will carry irrigation water under the creek to provide increased capacity for storm flows. A slide gate will be installed at the upstream opening of the siphon for flow control. The siphon will include a spillway to allow for release of excess flows in the canal while maintaining the design water surface and prevent overtopping of the banks. Surplus flow may result from storm runoff into the canal, a sudden and unforeseen large flow rejection from a turnout diversion, an unexpected gate closure, or plugging overflow or gated diversion structure from the Main Canal. A wasteway, sized for approximately 100 cfs, will be used to empty the canal during an emergency, at the end of the operating season, or during the off-season. Attachments 11 and 12 show a typical siphon for 7-foot and smaller diameter pipe and wasteway.

Canal Lining

Concrete lining produces a hard barrier which generally results in a low rate of seepage, presents an impenetrable barrier against burrowing animals, and significantly reduces weed growth in the canal prism. The U.S. Bureau of Reclamation (USBR) recognizes concrete as the most popular material for lining canals. Reinforced concrete is preferred over unreinforced concrete because it requires less maintenance and has greater strength and durability. It is anticipated that the concrete lining in this project will be reinforced using welded wire fabric and will cover the full

prism (left bank to right bank). The proposed lining locations are shown in Attachment 2, with a combined length of nearly 2 miles. A typical cross section of reinforced concrete lining is illustrated on Attachment 13. USBR suggests a maximum side slope of 1.5:1, except for small canals with soils that will remain stable. Additionally, the side slope will have to be cleared of all organic matter, which consists mainly of weeds and grasses with occasional blackberry bushes, and possibly some small trees.

SCADA Control System

SCADA is an arrangement of electronic, electrical, and mechanical communication components that will add the capability to command or direct the regulation of the canal system including turnouts and check structures. A SCADA system in this project will serve canal operations and maintenance by providing a combination of alarm information, equipment status information, and actual values for gate positions, water levels, and flows throughout the entire canal system. These capabilities are essential for efficient and safe operation of a canal system. An alarm communication system provides the District with automatic alarm reporting capability from each important structure within the canal system. The District will be efficiently directed to the correct location during emergency and abnormal operating conditions by the automatic alarm information. A SCADA system can also provide the District with the capability to monitor and control the canal system without ditchrider assistance.

It is anticipated that communications will be transmitted via radio. Radio systems are well suited to applications requiring smaller bandwidths and lower data rates. Radio systems can carry voice frequency communications and data. In general, this type of communication system is the most economical of all systems, especially when no or very few repeaters are required, and frequency licensing is readily available. It is believed that only one repeater is required for this project. The repeater will be located northeast of Cottonwood, near Balls Ferry Road. This location will allow signals to be routed around the large bluff that separates Anderson and Cottonwood. Repeater installation costs may be prohibitive in cases where potential sites are privately owned, costly, or unavailable. It has been assumed for this project that repeater installation will not be cost prohibitive.

Readiness to Proceed

The project implementation sites have been identified and conceptual design completed through the Phase 1a Feasibility Study. The Environmental Document is underway and expected to be in place by 2006, in time for monies obtained in this grant round to be in place.

Work Plan

All Phase I tasks where completed and reported upon in the April 2002 Phase 1A Feasibility Study-Main Canal Modernization Project.

Phase I—Feasibility Study, Completed in 2002 with CALFED Funding

Task 1.1 Data Collection and Mapping

Task 1.2 Environmental Reconnaissance

Task 1.3 Geotechnical Investigations

Task 1.4 Hydraulics and Site Engineering

Task 1.5 SCADAD

Task 1.6 Right-of-Way and Temporary Construction Easements

Task 1.7 Cost Estimates

Task 1.8 Feasibility Report

Phase II—Final Design, Permitting, and Environmental Documentation (Subject of this Application)

Information collected in Task 1 will help identify sites for improvements and types of facilities. Sufficient design will be completed to estimate construction cost and establish the Preferred Alternative for NEPA/CEQA compliance. Meetings with affected landowners will ensure cooperation and coordination prior to proceeding further at each location. Land/easement acquisition proceedings will be initiated at this point if required. Criteria for site selection will include accessibility, potential for environmental impacts, site topography and geotechnical characteristics, cost, and hydraulic considerations.

After the sites are verified and the preferred alternative selected, facilities will be designed for site and hydraulic conditions and sized for existing in-channel flows. New control structures are expected to be standard concrete canal checks with radial gates or motor-operated slide gates (MOSG) mounted on breastwalls. Turnouts will require new concrete headwalls with MOSG. Measurement facilities would consist of a mixture of replogle flumes and turnout pipes designed properly for accurate measurement with flow meters, as dictated by site conditions. It is anticipated that all lining will be reinforced shotcrete. Construction plans and specifications will be completed to facilitate bidding for one or multiple construction contracts.

Deliverables: Construction plans and specifications.

Task 2.1.—Project Management, Meetings, and Quality Control

Subtask 2.1a—Project Management

Engineer will provide project and design management services to facilitate communications with the District, regulatory agencies, and the design team, and to organize production of the bid documents. Project management tasks include project setup, project instructions, project staffing, team meetings, project coordination with the District and its other consultants, attending agency meetings with the District, scheduling work, monthly invoicing, change management, and progress report preparation. Design management services will focus on design production, drawing and specification preparation, quality control (QC), and meeting intermediate and final deadlines.

Deliverables – Monthly invoices with a status report. Quarterly reports, monthly billing statements, and all other documentation required by DWR.

Subtask 2.1b—Meetings

Engineer anticipates the following meetings will be required during the final design phase of the project:

- Design kickoff meeting

- Five meetings with the District and District staff
- Deliverable review meetings will be at the 30 percent, 60 percent, and 90 percent completion stages
- Attendance at 10 District monthly board meetings and 3 District project workshops

Notes for each meeting listed above will be prepared and distributed to ACID attendees. When practical, meetings will be consolidated to occur on the same day. It is assumed that comments from regulatory agencies will be relatively minor and will not significantly impact the design concepts for the Project or the design delivery schedule.

Subtask 2.1c—Quality Control Review

Throughout the final design phase, senior members of the Engineer's team will review design and construction methodology, drawings, calculations, and overall integrity of the design. Formal internal reviews by senior engineers will be performed on the 30 percent, 60 percent, and 90 percent submittal documents. All comments received from the QC reviewers will be reviewed and adjudicated by the design team and QC reviewers, with changes and additions incorporated into the next submittal.

Task 2.2—Design Development and Modeling

This Task is to further develop the ACID Main Canal Modernization and Automation concept into a 30 percent design where all the major design features are developed and agreed to prior to beginning final design and obtaining the permits.

Subtask 2.2.1-Land Survey and Mapping

Subtask 2.2.2—Configuration and Phasing Analysis for Structure Installation; ACID Deliveries

Subtask 2.2.3—Site Specific Geotechnical Investigation

Subtask 2.2.4—Corrosion Survey

Subtask 2.2.5—Findings Report

This subtask provides for compilation of a Findings Report for prospective bidders to assist them in developing their bids. The report will contain raw information without recommendations or interpretations. Information will consist of the following:

- ACID Historical Deliveries
- Findings from the geotechnical investigation, excluding recommendations
- Findings from the corrosion survey, excluding recommendations
- Locations of survey control

Deliverables—Thirty copies of the Findings Report.

Subtask 2.2.6—30 Percent Design

The Engineer will develop the 30 percent design for the Project. This stage of the project will be most important because it will clearly show the full scope of the project by producing 5 to 10 of the key design drawings. A Design Development TM will be produced to document the major design criteria used for the various project components.

Deliverables—The products of the 30 percent design will be 5 sets (includes sets to District) of approximately 10 drawings, construction cost estimate, project schedule, and five copies of the 30 percent Design Development TM.

Task 2.3—Permitting and Environmental Documentation Support

The proposed project is included as part of the Sacramento Valley Water Management Program (SVWMP) and as such is being evaluated as part of an on-going Environmental Impact Statement/Report (EIS/EIR) led by the U.S. Bureau of Reclamation and the California Department of Water Resources, respectively. The EIS/EIR is scheduled to be completed in early 2006. Any specific components of the proposed project not covered by the SVWMP EIS/EIR would be evaluated in a subsequent Environmental Assessment/Initial Study as determined necessary.

Deliverables—Copies of selected drawings and technical information as required. Permitting support as required.

Task 2.4—Final Design Services

Engineer will follow CH2M HILL standard design delivery process for delivery of the final design and bid documents for the construction of the Project. This process includes producing design deliverables at three stages of the design (60 percent, 90 percent, and 100 percent). At each stage, Engineer will provide information for review and provide for resolution of key issues before proceeding to the next stage. The information collected and the concepts defined in each consecutive stage will form the basis for subsequent work.

Submittal review workshops with the District and internal QC reviews will be conducted to monitor the quality of the Project at critical design milestones as identified in the following subtasks. District staff review comments and resource agency comments are assumed to be consolidated into one comprehensive package and submitted to the Engineer before or during submittal review workshops identified herein. The District and the resource agencies will provide comments to the Engineer within 2 weeks of receiving the documents.

Contract documents will be prepared assuming a single successful general contractor will furnish equipment, materials, and labor necessary to construct the Project. The contract documents will consist of bidding information and forms, conditions of the contract, general requirements, technical specifications, and drawings.

Bidding information and forms, conditions of the contract, general requirements, and technical specification sections will be based on Engineer's master specifications using Construction Specifications Institute (CSI) standards format and customized for the specifics of this project. Specifications will be produced using Engineer's standard Microsoft Word software and 8½-inch by 11-inch format. Drawings and technical specifications will be stamped in accordance with California law and signed by licensed engineers of the appropriate disciplines.

The drawings will show the level of detail deemed necessary by Engineer to obtain reasonable bidder response and to minimize potential change orders. Drawings will be produced using the Engineer's standard MicroStation software and 22-inch by 34-inch (C size) drawing format.

The Engineer will furnish construction cost estimating services where indicated below. Estimates will be prepared to the level of accuracy based on the information available within normal industry standards. Estimates will be formatted in accordance with the Project design CSI specification format and segregated by facility. Where sufficient detailed information is lacking

to obtain reasonably accurate quantities of materials, judgmental allowances will be used to provide an opinion of the estimated construction costs at the midpoint of construction.

Subtask 2.4.1—60 Percent Design

***Deliverables*—**The products of the 60 percent design will be 5 sets of drawings, a draft of the bidding requirements and contract documents, an index of technical specifications, construction cost estimate, project schedule, and five copies of the 60 percent Design Development TM.

Subtask 2.4.2—90 Percent Design

Deliverables—The products of the 90 percent design will be 10 sets of a complete set of bid documents, construction cost estimate, project schedule, and five copies of the final Design Development TM.

Subtask 2.4.3—100 Percent Design

Following incorporation of appropriate District and funding agency review comments, the Engineer will prepare the final, bid-ready Contract Documents.

***Deliverables*—**Following are the deliverables for this subtask:

- Five sets of 22-inch by 34-inch, PE stamped and signed, 24-pound-bond paper Drawings (one original unbound and four bound copies)
- Fifty sets of 11-inch by 17-inch, PE stamped and signed, 24-pound-bond paper Drawings (one original unbound and 49 bound copies)
- Fifty sets of Contract Documents (one original unbound and 49 bound copies)
- Twenty copies of the Findings Report
- Five copies of Project Construction Schedule
- Engineer’s Estimate

Task 2.5—Bid Services

The Engineer will assist the District during the bidding process, which begins at the point that the final bid documents are provided to the District and continues until the District awards the construction contract. The following activities are anticipated:

- Respond to Contractors’ inquiries during the bidding process, as required
- Prepare up to two addendum packages for clarification, as required
- Coordinate and attend a pre-bid conference at the Project site
- Review bids and bidder bonds, insurance, and references. Make a recommendation of award to the District

This Scope of Work assumes that bid document distribution to plan rooms, bidders, suppliers, and subcontractors will be handled by the Engineer. Direct advertising costs will be paid by the District. The level of effort assumed in developing the estimated fee for this task assumes that the Project will only be bid once, and that the District will award the construction contract to the low bidder without any bid protests.

Deliverables—Technical materials as needed and a letter recommending contract award to the District.

Phase III—Construction

Task 3A: Construction. Construction includes installing control and measurement facilities, SCADA systems, and canal lining. It is expected that most of the construction activity will need to occur between November and March, when ACID is not delivering irrigation water. It is expected that a construction contract would be awarded through a conventional bidding process.

Task 3B: Construction Management and Inspection. An engineering consultant will administer the construction contract and inspect the work for compliance with the contract documents. Services will include processing the contractor's pay requests, reviewing construction submittals, materials testing, and startup procedures.

Other Tasks

Task 4: Operation and Maintenance (O&M). O&M of all new facilities and equipment is proposed to be accomplished by the District as an in-kind, cost-sharing service.

Task 5: Contract Management and Administration. This task incorporates management of project costs and schedule, administering grant funds, developing work plans, coordinating with other entities and agencies, and overseeing activities of the project team.

Task 5: Mitigation. Upon completion of construction, environmental specialists will develop and carry out a mitigation planting program to replant or replace affected riparian and/or wetland vegetation at the predetermined replacement ratio.

Schedule

The grant and contract is expected, per the application instructions, to be in place by December 01, 2005. Therefore, the program is scheduled to begin the following Monday, December 05, 2005. The Final Design is anticipated to be completed within 18 months of the start date. An implementation schedule is provided as Attachment 14 listing the same tasks as provided in the work plan.

Construction Cost Estimate

The estimate was prepared in accordance with the guidelines of the AACE International, (the Association for the Advancement of Cost Engineering). According to the definitions of AACE International, the "Class 4 Estimate" is defined as follows:

Class 4 Estimate. Generally prepared based on some information, where the preliminary engineering is from 1 percent to 5 percent complete. Detailed strategic planning, business development, project screening, alternative scheme analysis, confirmation of economic and or technical feasibility, and preliminary budget approval to proceed. Some examples of estimating methods used would be equipment and or system process factors, scale-up factors, and parametric and modeling techniques. This type of estimate requires more time expended in its development. The typical expected accuracy range for this class estimate are –15 percent to –30 percent on the low side and +20 percent to +50 percent on the high side.

The cost estimates shown, and any resulting conclusions on project financial or economic feasibility or funding requirements, have been prepared for guidance in project evaluation and implementation from the information available at the time of the estimate. The final costs of the project and resulting feasibility will depend on actual labor and material costs, competitive market conditions, actual site conditions, final project scope, implementation schedule, continuity of personnel and engineering, and other variable factors. As a result, the final project costs will vary from the estimate presented here. Because of these factors, project feasibility, benefit/cost ratios; risks, and funding needs must be carefully reviewed prior to making specific financial decisions or establishing project budgets to help ensure proper project evaluation and adequate funding.

Table 1 shows the cost estimate for project implementation (Phases 2 and 3). Table 2 estimates the ACID cost share through in kind and legal services. The project requires up to $10.9 million for implementation. ***However, final design (conceptual design is complete from the feasibility study) and construction of project components can be phased as funds allow (i.e. ACID will implement project component design and construction in phases to make use of any grant funds from $100,000 up to $10.9 million.)***

TABLE 1
Construction Cost Estimate
ACID Main Canal Modernization Project

Item	Unit	Quantity	Estimated Unit Cost	Total Cost
Double Gate Check Structure	EA	2	$326,175	$652,350
Single Gate Check Structure	EA	2	$241,050	$482,100
Large Diameter Inverted Siphon	EA	1	$627,125	$627,125
Small Diameter Inverted Siphon with Control	EA	1	$332,675	$332,675
Measurement Structure (Main Canal)	EA	4	$80,575	$322,300
Measurement Structure (Lateral)	EA	12	$25,825	$309,900
Automated Turnout	EA	12	$44,925	$539,100
Canal Lining	LS			$2,900,000
SCADA	LS			$295,000
Subtotal				$6,460,550
Mark-up				
Mobilization/Demobilization			5%	$323,028
Bond, Permits, Insurance			10%	$646,055
Contractor's Overhead and Profit			10%	$646,055
Construction Contingency			25%	$1,615,138
Engineering, Legal, and Admin.			12%	$775,266
Project Escalation to Construction			7.1%	$458,699
(midpoint at January 2004 @4%/yr)				
Total Mark Up (81.84%)				*$4,464,240*
Total				**$10,924,790**

Table 2

	ACID Labor	***ACID Expenses***	***Travel***	***Consultants/ Contractors***	***Total Costs***
Phase 2, Design	$10,000	$2,500	$800	$775,266	$788,566
Phase 3, Construction	$160,000	$25,000	$2,000	$10,149,524	$10,336,524
Total	$170,000	$27,500	$2,800	$10,924,790	$11,125,090
Total ACID Cost Share	$170,000	$27,500	$2,800		$200,300
Total Public Funds Request				$10,924,790	$10,924,790

Environmental Documentation

The proposed project is included as part of the Sacramento Valley Water Management Program (SVWMP) and as such is being evaluated as part of an on-going Environmental Impact Statement/Report (EIS/EIR) led by the U.S. Bureau of Reclamation and the California Department of Water Resources, respectively. The EIS/EIR is scheduled to be completed in early 2006. Any specific components of the proposed project not covered by the SVWMP EIS/EIR would be evaluated in a subsequent Environmental Assessment/Initial Study as determined necessary.

Permitting Requirements

Because of potential impacts to active creek channels and riparian habitat, construction of proposed canal siphons may require permits from various regulatory agencies. All other proposed structures in this project are anticipated to remain within the canal footprint, and may not be subject to environmental permitting requirements. If necessary, additional permitting requirements will be identified pending further project refinement. Agencies that might have involvement in the permitting process will likely include one or more of the following: Regional Water Quality Control Board (RWQCB), U.S. Fish and Wildlife Service (USFWS), COE, State Reclamation Board, Federal Emergency Management Agency (FEMA), California Department of Fish and Game (CDFG), Advisory Council on Historic Preservation, and local governments and special districts. Special-Status Species/Wetland Delineation

Section A-15e, Statement of Work

Section 3: Monitoring and Assessment

Information from each measuring facility will be compiled as a routine O&M task and made available to USBR and DWR. The appropriate level/frequency of data collection will be determined in consultation with USBR and DWR. The 13 additional measurement points, one along the Main Canal and one on each turnout, will enable the District to monitor deliveries and losses. In addition to comparing flows from various points in the system, it will be possible to compare flows at the existing USGS gage near Sharon Street in Redding with new flows measured in the upper reaches of the canal to compare historical river diversions to post-project diversions.

During Design

Throughout the final design phase, senior members of the Engineer's team will review design and construction methodology, drawings, calculations, and overall integrity of the design. Formal internal reviews by senior engineers will be performed on the 30 percent, 60 percent, and 90 percent submittal documents. All comments received from the QC reviewers will be reviewed and adjudicated by the design team and QC reviewers, with changes and additions incorporated into the next submittal. Costs associated with the QA/QC of the design are considered part of the engineering costs and therefore are not broken out as a separate line item.

During Construction

ACID's consulting engineer will provided professional services during construction. The professionally register engineer will be available to provide design feedback and answer questions/concerns during construction. The District will also hired qualified and registered professionals to provide QA/QC in the form of construction management.

Section A-15f, Qualifications

Applicant

Project Manager

The resume of Dee Swearingen, ACID General Manager, is attached (Attachment 15). Mr. Swearingen will administer the contract, oversee the work, and provide all required documentation to DWR.

External Cooperators

It is not anticipated that the project will require additional assistance from any other entity or agency. ACID will coordinate with landowners who may be affected by project construction. ACID will hire professionally registered engineers with appropriate experience in both the local system and with the design and construction of canal structures and SCADA installation.

Section A-15g, Outreach, Community Involvement and Acceptance

ACID is one of 14 RAWC members that participated in the Basin's water resources regional plan through 2030. This proposal is consistent with the plan; it will help to quantify water requirements at key District locations and provide better information on seepage rates from the District's unlined canals. Data from monitoring ACID's system will help to enhance the RAWC surface-water/groundwater model and evaluate future water management options. The project also is an outgrowth of the BWMP and the Sacramento Valley Water Management Agreement. The activities associated with the RAWC, the BWMP, and the Sacramento Valley Water Management Agreement all are undertaken in conjunction with a public information and involvement component.

The project implements BWMP recommendations. The BWMP, being developed by most Sacramento Valley agricultural water contractors in association with USBR and DWR, has a strong public information and involvement component. During BWMP development, numerous presentations were made among participating "Settlement Contractors" with DWR and USBR staff. Informational meetings were held with Settlement Contractor Boards of Directors, water users, and environmental interest groups to solicit stakeholder input and disseminate information about the BWMP.

The project is an outgrowth of the Sacramento Valley Water Management Agreement among the Sacramento Valley water users, DWR, USBR, and export water users. The ongoing process that resulted in the Agreement has a strong public outreach component to inform agencies, environmental and other interests, and the public on the Agreement. Numerous presentations have been made to the CALFED Management Team and associated staff, county supervisors in all affected counties, water districts and their customers, and other organizations and agencies, including the SWRCB, Trust for Public Lands, The Bay Institute, U.S. Fish and Wildlife Service, Natural Heritage Institute, The Nature Conservancy, and the public. Additional meetings will occur as the planning and implementation process proceeds. No individual or organization has expressed formal opposition to the Agreement or the projects to be undertaken under the Agreement. The projects, including the one described herein, have been summarized in a published "Short-term Workplan" prepared in conjunction with the Agreement.

The planning effort associated with the Agreement provides a formal framework for disseminating project information. Feedback on benefits achieved through the management and conservation measures recommended in the Agreement will be made available to all Sacramento Valley water contractors, USBR, and DWR through the planning partnership. The participants are aware of the need to share this information to ensure successful water supply management throughout the Sacramento Valley.

Additionally, this and all other capital outlay projects associated with the Agreement will be subject to CEQA and NEPA documentation. The CEQA and NEPA statutes and implementing guidelines ensure that the public and all affected agencies will be fully informed of the project and its effects and receive meaningful opportunities to provide input and review and comment on the project through the CEQA and NEPA public review process.

Section A-15h, Innovation

The conveyance and delivery system presently in use by the district is in many ways antiquated. This system will greatly benefit by upgrades to there system consisting of innovations and technology already present in many areas of the Sacramento Valley. It is anticipated that a central control facility will be constructed to handle all automation and monitoring. We envision that each turnout will be operated from the central control panel, while check structures will operate according to upstream water levels. The use of a SCADA system to measure and control these upgrades will allow this system not only to become more efficient but also help the system to become a piece of a much larger and innovative goal. This is to create a regional system that will allow all water users in the Sacramento Valley to operate as a single efficient system.

Section A-15i, Costs and Benefits

Benefits

The proposed construction of new facilities is expected to generate numerous benefits for both local and regional water users. The benefactors of this program include ACID, downstream users, the environment, and the Sacramento-San Joaquin Delta. The following benefits are discussed in this section:

- Water Supply Benefits
- Water Management Benefits
- Environmental and Water Quality Benefits

Water Supply Benefits

The proposed project would provide the capability to more flexibly and efficiently manage the amount and timing of diversions from the Sacramento River. It would reduce diversions, thereby increasing instream flows, and also would reduce spill, ET, and seepage losses. Water supply benefits would include:

- **Water control, automation, and measurement—**The new/retrofitted canal structures would automatically adjust to changing canal water levels, as influenced by fluctuations in Sacramento River flows and downstream irrigation needs. The resulting reduction in operational spills would reduce both diversion from the river and ET losses in the drainage courses receiving the spills. The flow measurement component would enhance the District's capability to track river diversions, quantify losses and conservation benefits, and schedule and synchronize diversions with grower needs. It is estimated that through improved control, automation, and measurement, annual ACID diversions from the Sacramento River may be reduced by as much as 7.5 percent, or 10,000 acre-feet, as a result of reducing operational spills through this project.

- It is recognized that a portion of ACID's historical spills return to the river through natural or constructed watercourses. This portion, therefore, may not add "new" flow to the river. However, the associated delay and water quality degradation are undesirable and further warrant control of the spills. The significant portion that does not return to the river is lost to the system through evaporation and transpiration en route to the river. Thus, the reduction in operational spills through improved control and automation would decrease non-productive ET and increase river flows by a corresponding amount.

  ACID is the largest purveyor among the 14 members of the RAWC, which is working on a regional plan to solidify the Redding Basin's water resources through the year 2030. Improved control and measurement capabilities would enhance the District's contribution to this initiative.

- **Canal lining—**The canal lining component would drastically reduce seepage in critical areas. Concrete lining in the high seepage, sandy areas of the canal, presumably about 2 miles long, may reduce seepage by about 10,000 acre-feet/year. This reduction estimate is based on canal dimensions and a seepage loss rate of 17 inches per day for a 180-day irrigation season. The loss rate of 17 inches per day reflects the seepage difference between an unlined canal in sandy soil (20 inches per day) and a concrete-lined canal (3 inches per

day). The resulting seepage estimate for the project, therefore, represents an "avoided loss" by upgrading to concrete lining.

Water Management Benefits

Water management benefits include:

- **System efficiency**—The predominant goal of the project is increased system efficiency. The automation of ACID's Main Canal would substantially improve the District's ability to more efficiently utilize its supply. The automated check structures would enable District staff to micromanage water delivery and prevent the majority of the inevitable operational spills that are often associated with manual structures. The District and its patrons would benefit by virtue of new, automated facilities and canal lining providing improved control, flexibility, and reliability along with less maintenance.
- **System flow measurement**—The new structures could be incorporated with ongoing efforts by the District to more accurately define system inflows and outflows. Measurement and tracking of flows add a necessary dimension to the management of water supply by allowing the District to more accurately quantify its water use.

Environmental and Water Quality Benefits

As ACID's primary source of supply, the Sacramento River would be directly and most beneficially influenced by the District's efficient use of its water supply. The potential 20,000-acre-foot/year decrease in surface water diversions has the potential for increasing available seasonal in-stream flows to the Sacramento-San Joaquin Delta. This additional water would contribute to addressing Delta water quality concerns that have been at the core of CALFED and other programs' efforts for the past several years. These and other potential environmental benefits associated with this project would be quantified throughout the various stages of the project, from FS through final design.

Costs

A break down of the project costs anticipated for the ACID Main Canal Modernization Project presented in Section B-15d are presented as Attachments copied from the Solicitation Packet's Appendix C.

Tables

Complete tables C-1 thru C-7 are provided as Attachment 16. Tables available at www.owue.water.ca.gov/finance/index.cfm

Table C- 1: Project Implementation Costs (Budget)

Administrative costs are assumed to be incurred by ACID as in kind. The estimates are based on administrative/in kind services costs that were incurred on the ACID CALFED Fish Screen Project.

Table C- 2: Annual Operations and Maintenance Costs

These costs are assumed to be 0.5% of the overall estimated construction costs.

Table C- 3: Total Annual Project Costs

Table C-4: Capital Recovery Factor

The project life is assumed to be at least 30 years for the purposes of analysis.

Table C- 5: Project Annual Physical Benefits (Quantitative and Qualitative Description of Benefits)

See Also the description of Benefits at the beginning of this section to elaborate on the information in Table C-5.

Table C- 6: Project Annual Local Monetary Benefits

Table C- 7: Project Local Monetary Benefits and Project Costs

Table C- 8: Applicant's Cost Share and Description

ACID is located within a disadvantaged community and therefore not subject to matching funds requirements. However, ACID will incur significant administration costs through this project estimated on the order of $200,000.

The project does not directly involve training, employment, or capacity building, but through more efficient agricultural water supply management, it potentially makes more water available for beneficial uses. According to the *US Census Bureau* (http://quickfacts.census.gov/qfd/states/06/06089.html Shasta County (i.e., Redding Basin and CALFED Sub-Region 1) typically has higher unemployment (6.6 percent in 1999) and lower average per capita income (31st out of 58 California counties in 1999) and median family income than the rest of the state. The median household income (MHI) in Shasta County is $34,335 while the MHI for California is $47,493. A better managed water supply will help sustain the gains being made in the northern California economy by accommodating growth in industry and agriculture, providing growth in employment opportunities in all economic sectors

Attachment 1
Project Location Map

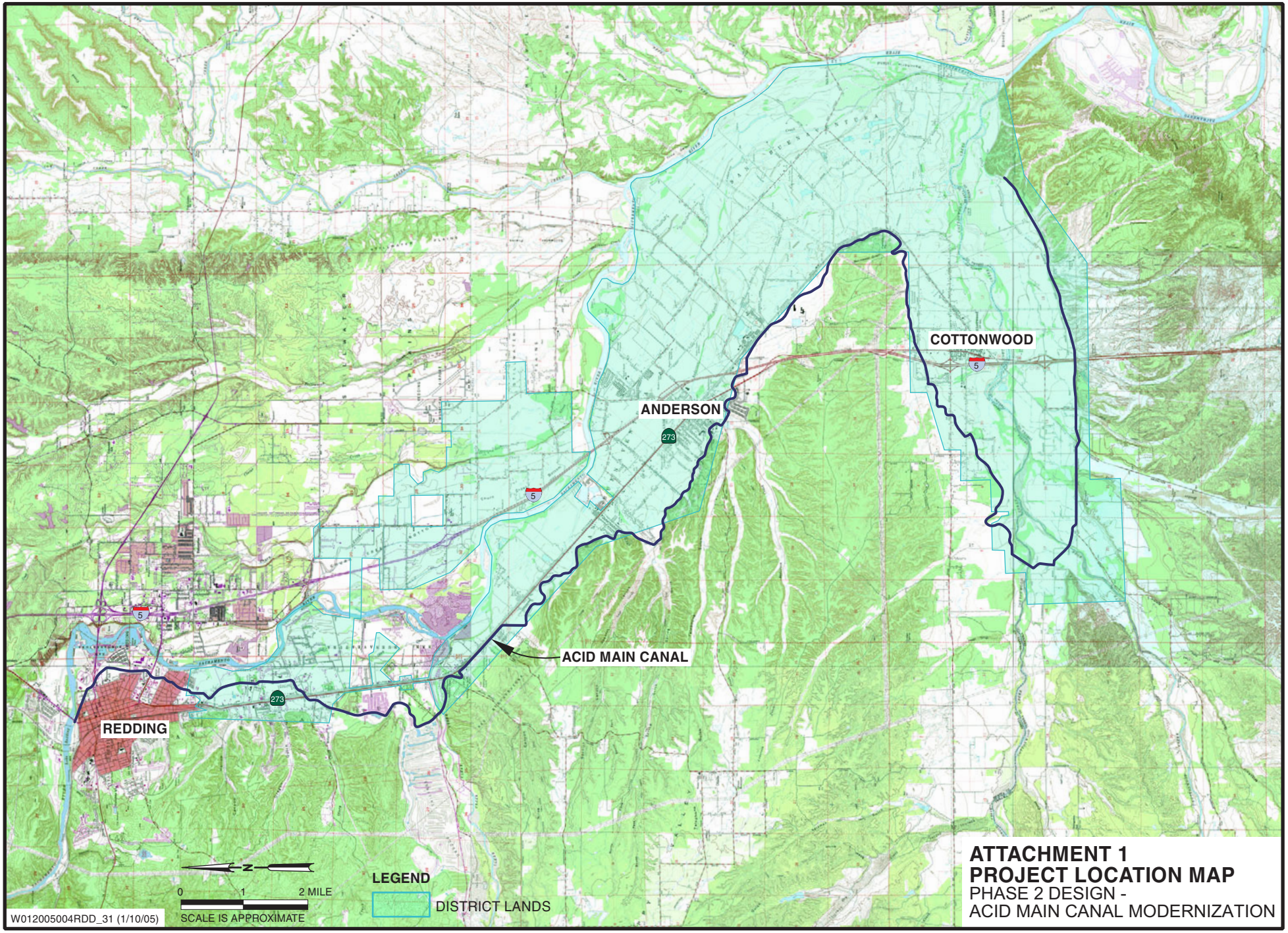

ATTACHMENT 1
PROJECT LOCATION MAP
PHASE 2 DESIGN -
ACID MAIN CANAL MODERNIZATION

Attachment 2
Acid Improvements (2a & 2b)

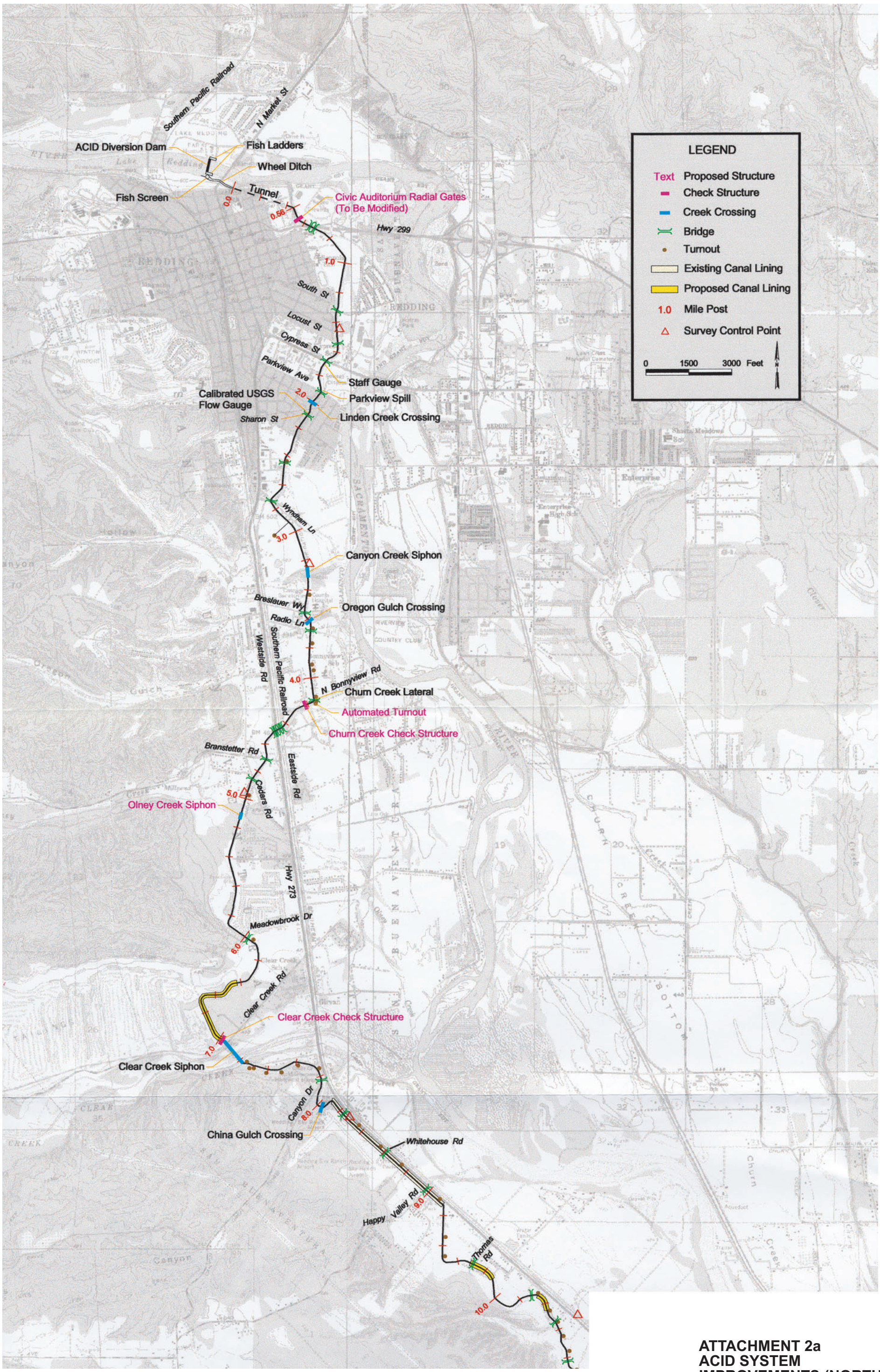

ATTACHMENT 2a
ACID SYSTEM IMPROVEMENTS (NORTH)
PHASE 2 DESIGN -
ACID MAIN CANAL MODERNIZATION

W012005004RDD_06 (1/10/05)

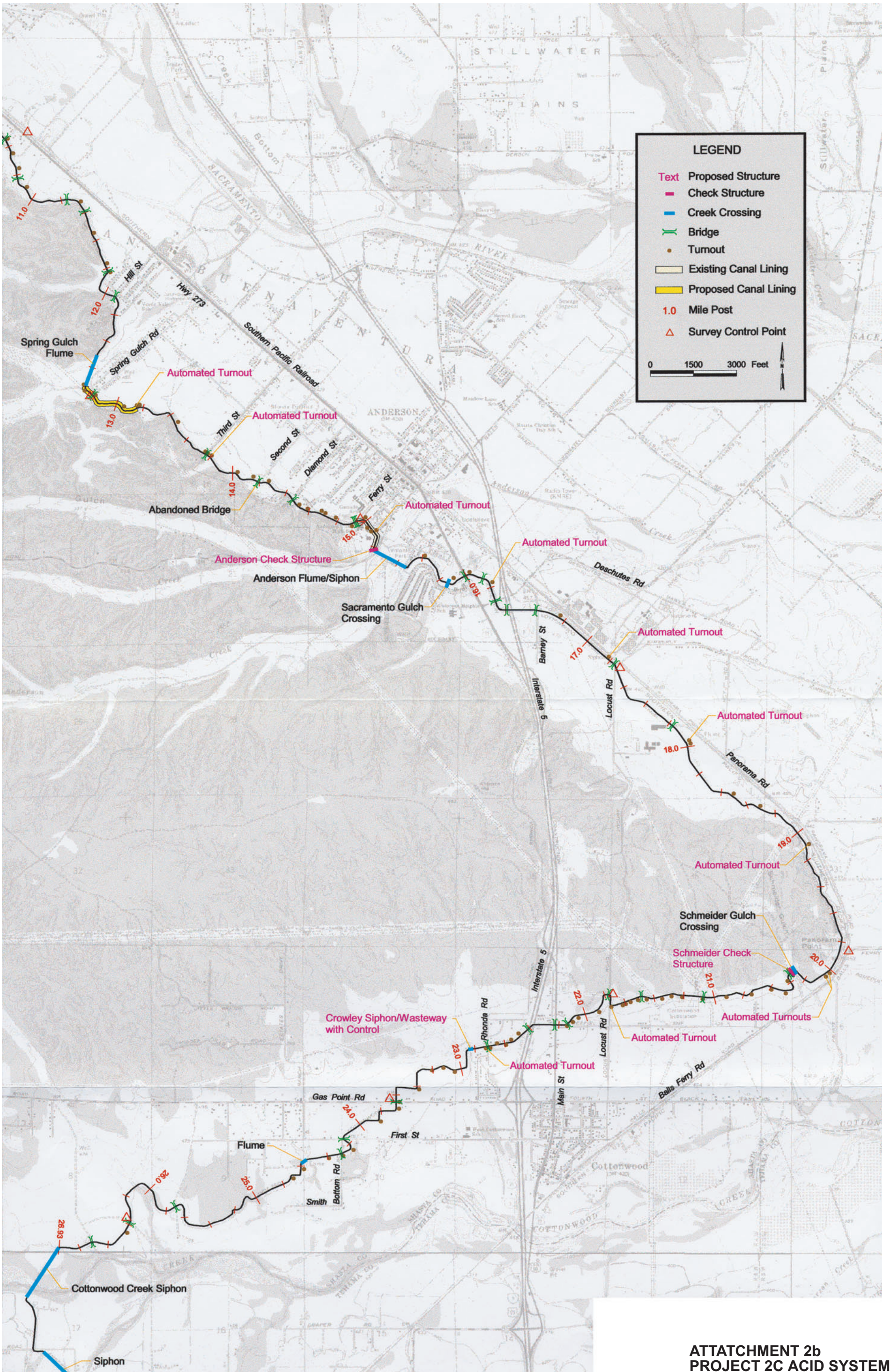

ATTATCHMENT 2b
PROJECT 2C ACID SYSTEM IMPROVEMENTS (SOUTH)
PHASE 2 DESIGN -
ACID MAIN CANAL MODERNIZATION

W012005004RDD_07 (1/10/05)

Attachment 3
Double Gate Check Structure

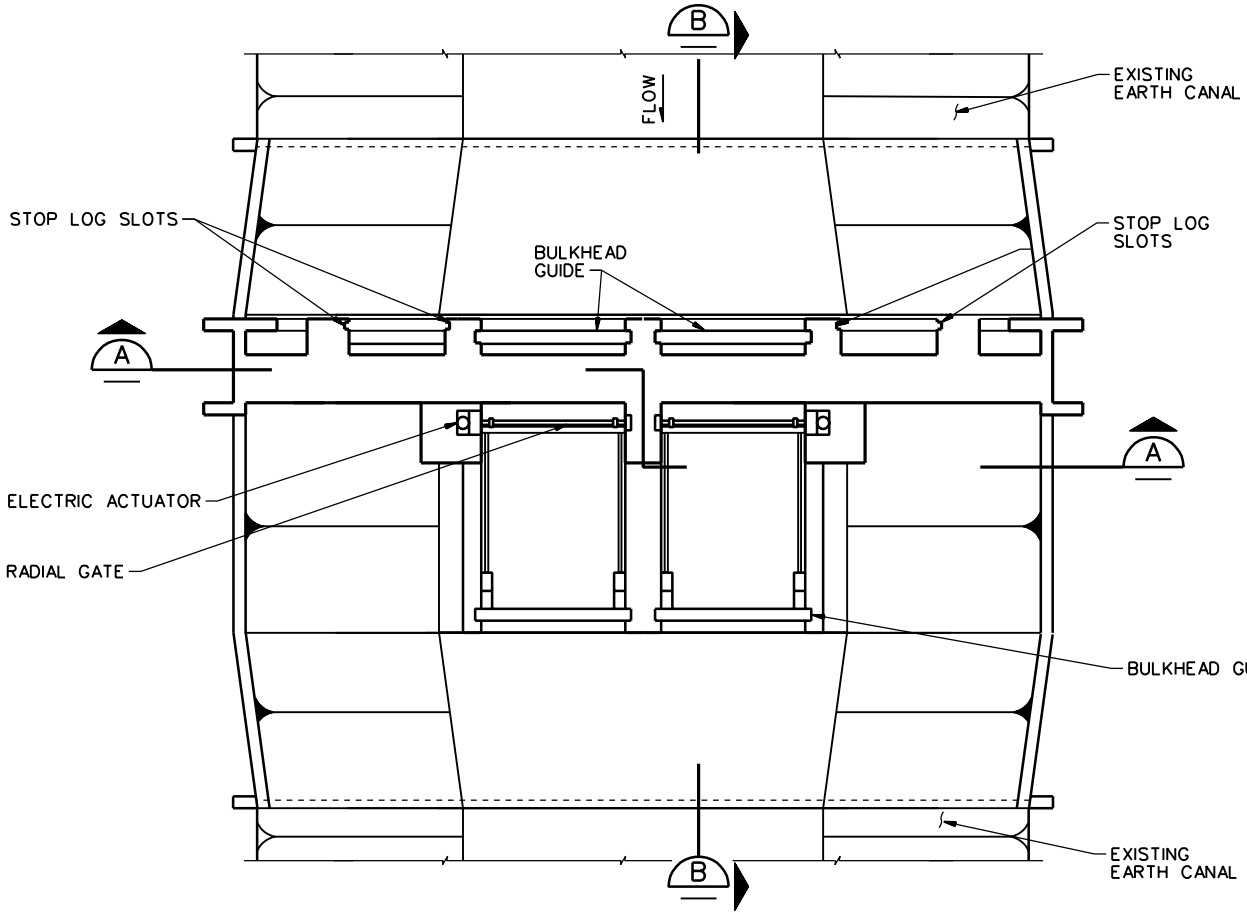

PLAN
NTS

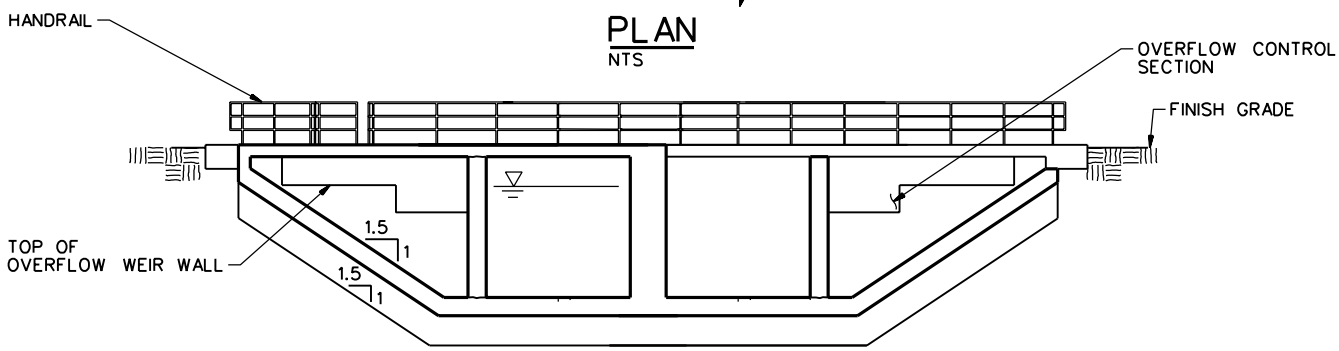

SECTION A
NTS

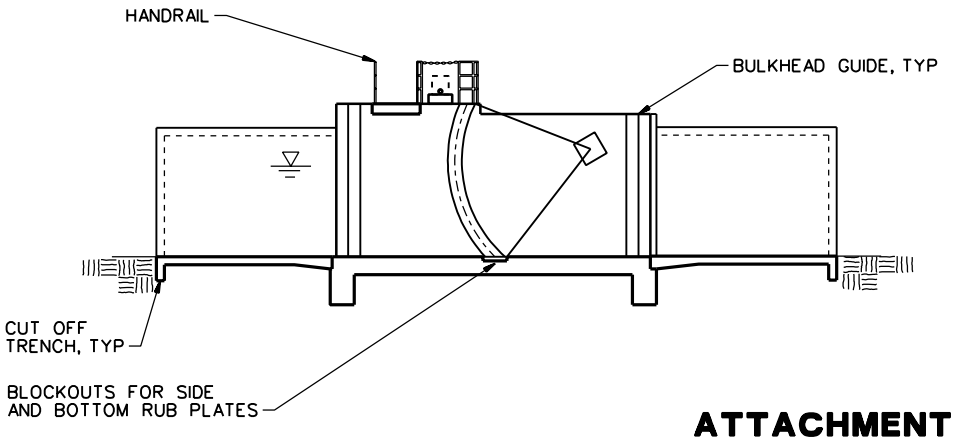

SECTION B
NTS

ATTACHMENT 3
DOUBLE GATE CHECK STRUCTURE
PHASE 2 DESIGN
ACID MAIN CANAL MODERNIZATION

pcfig02.dlv 10-JAN-2005 14:58:10

Attachment 4
Single Gate Check Structure

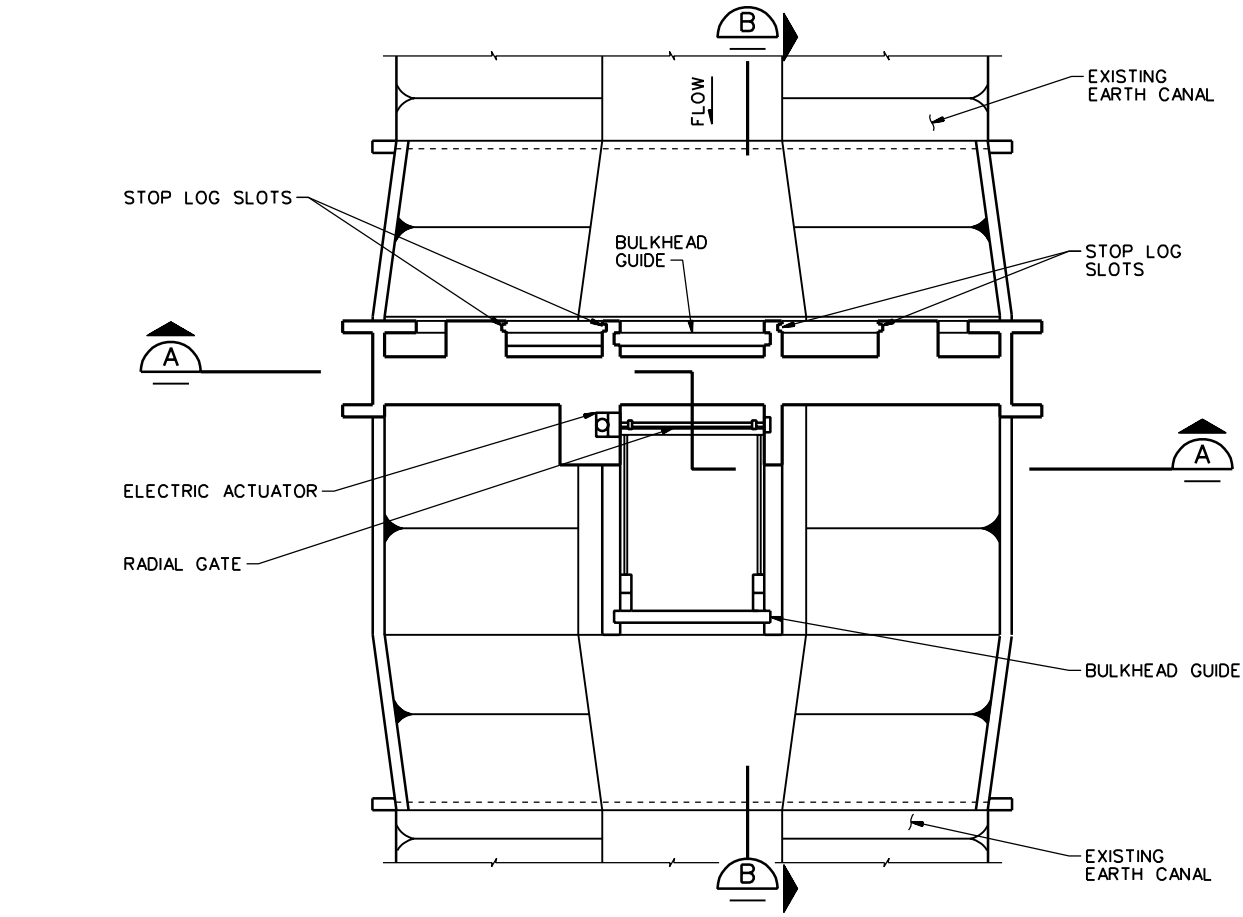

PLAN
NTS

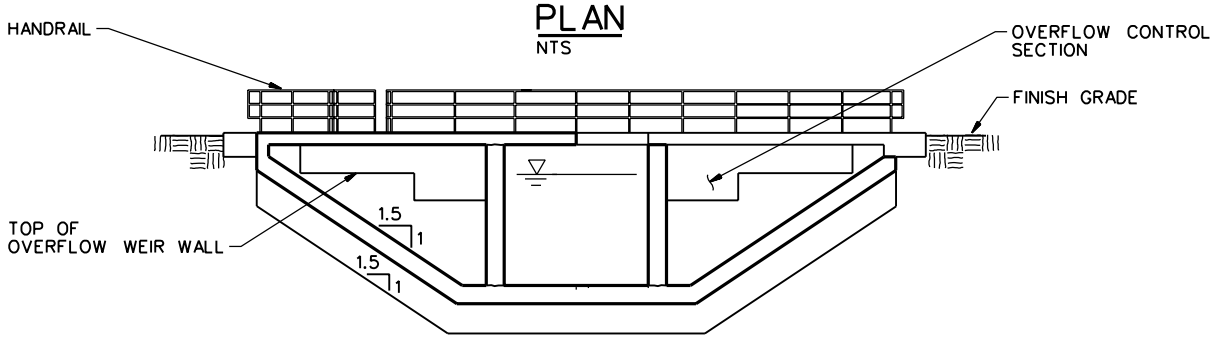

SECTION A
NTS

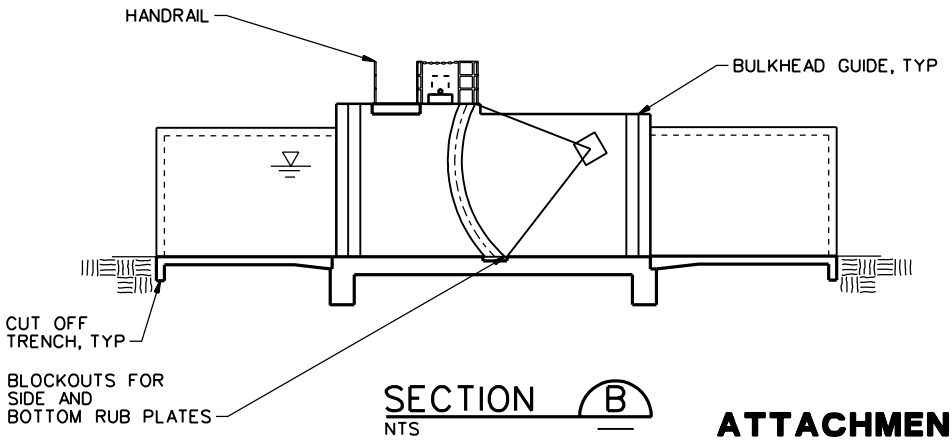

SECTION B
NTS

ATTACHMENT 4
SINGLE GATE CHECK STRUCTURE
PHASE 2 DESIGN
ACID MAIN CANAL MODERNIZATION

pcfig01.dlv 10-JAN-2005 14:58:54

Attachment 5
Typical Main Canal Flow Measurement Ramp Flume

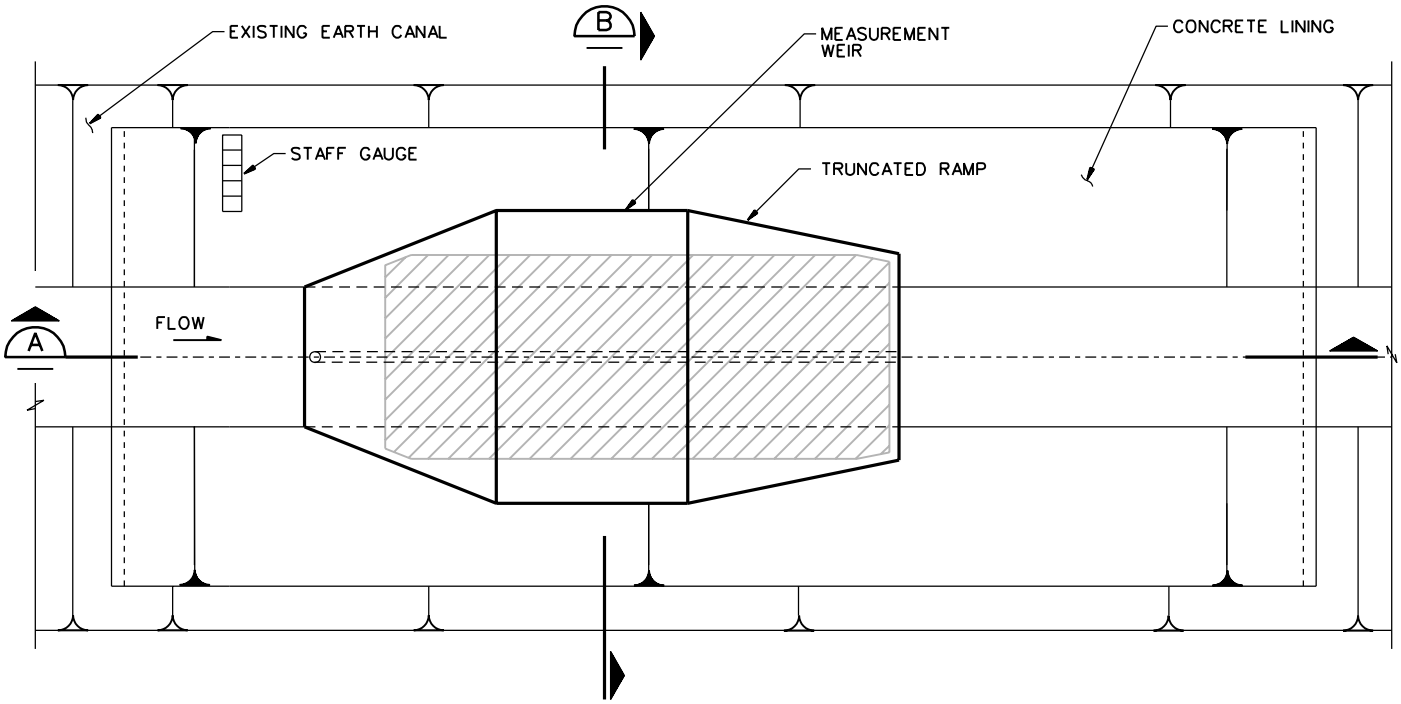

PLAN
NTS

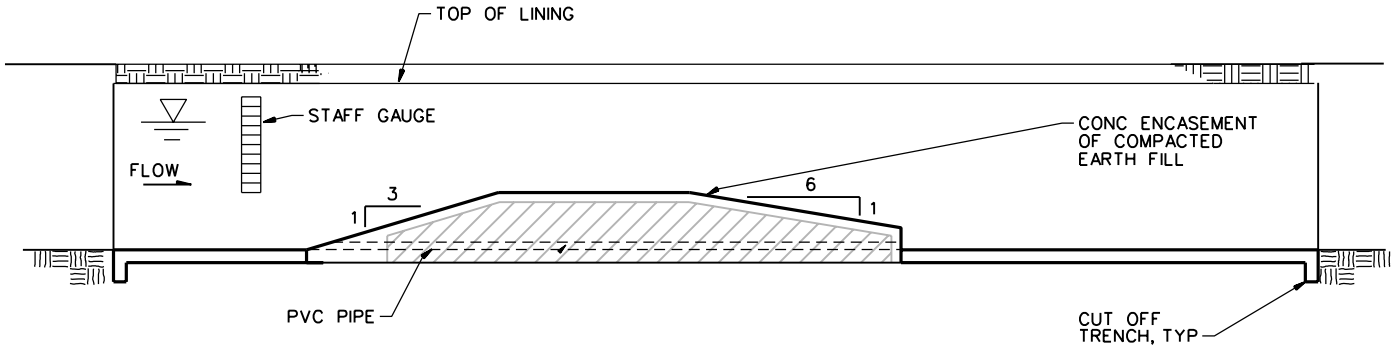

SECTION A
NTS

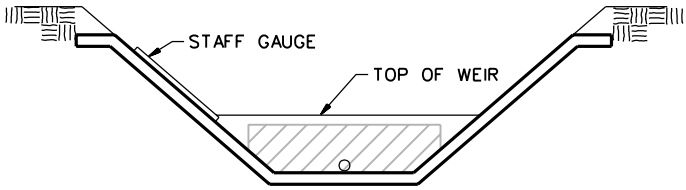

SECTION B
NTS

ATTACHMENT 5
TYPICAL MAIN CANAL FLOW MEASUREMENT RAMP FLUME
PHASE 2 DESIGN
ACID MAIN CANAL MODERNIZATION

pcfig03.dlv 10-JAN-2005 15:02:32

Attachment 6
Turnout Flow Measurement Weir Box

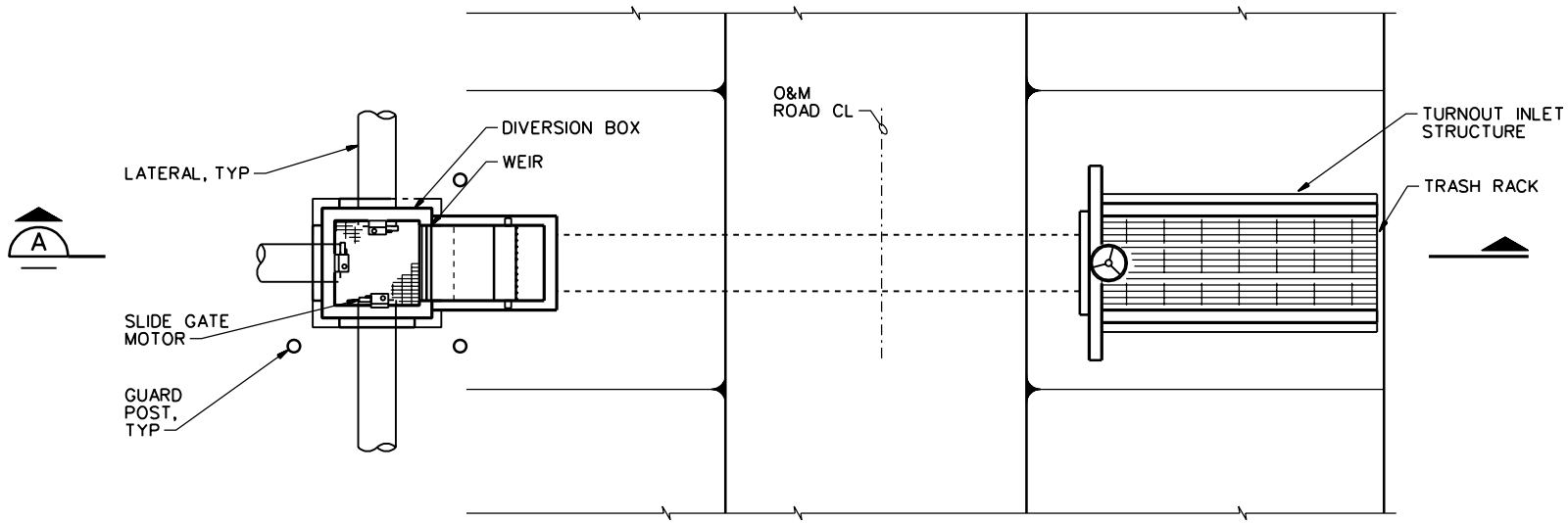

PLAN
NTS

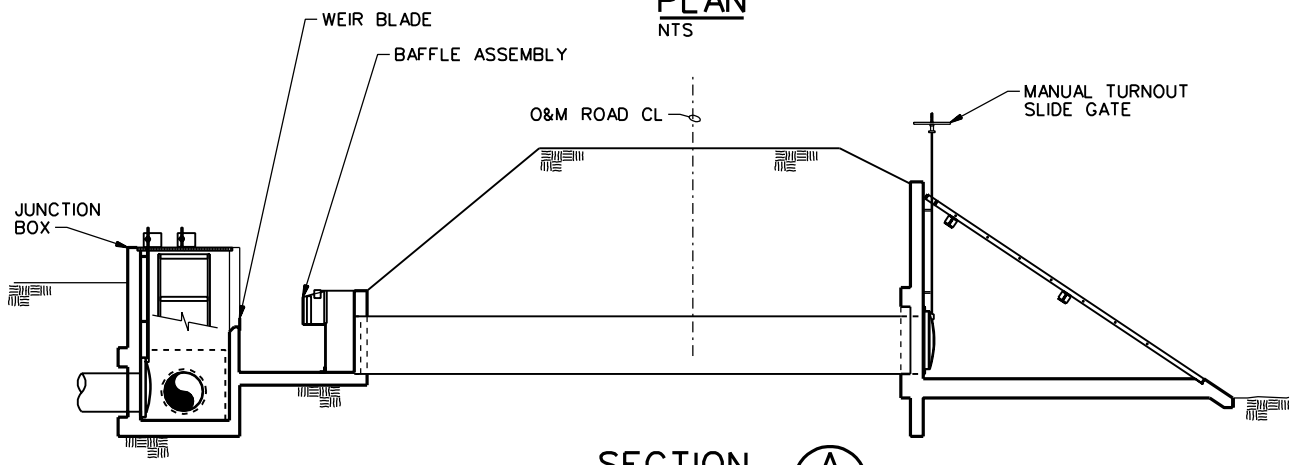

SECTION A
NTS

ATTACHMENT 6
TURNOUT FLOW MEASUREMENT
WEIR BOX
PHASE 2 DESIGN
ACID MAIN CANAL MODERNIZATION

pcfig04.dlv 10-JAN-2005 15:04:50

Attachment 7
Turnout Flow Measurement Ramp Flume

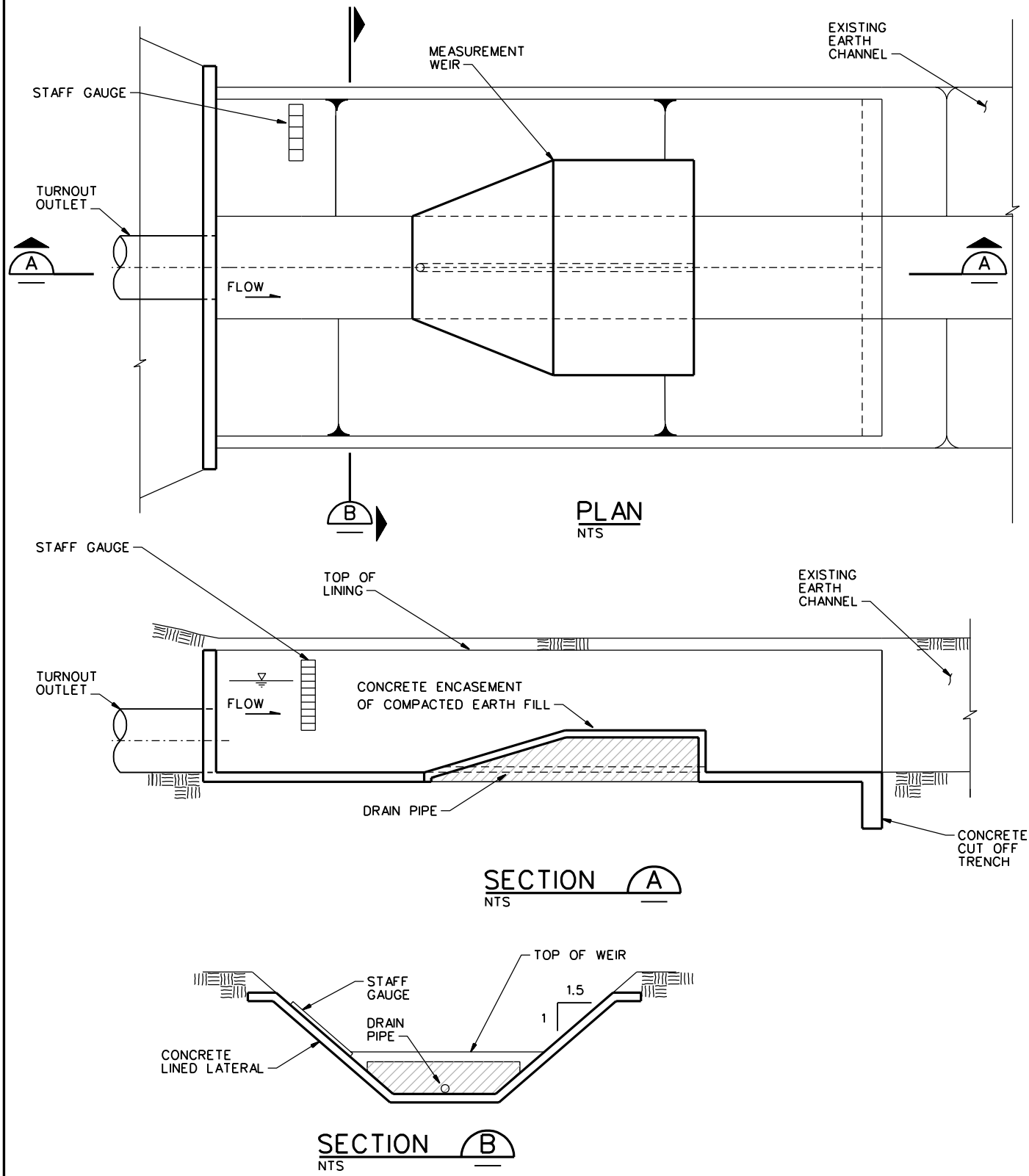

ATTACHMENT 7
TURNOUT FLOW MEASUREMENT RAMP FLUME
PHASE 2 DESIGN
ACID MAIN CANAL MODERNIZATION

pcfig05.dlv 10-JAN-2005 15:07:28

Attachment 8
Typical Siphon (8ft Pipe and Larger)

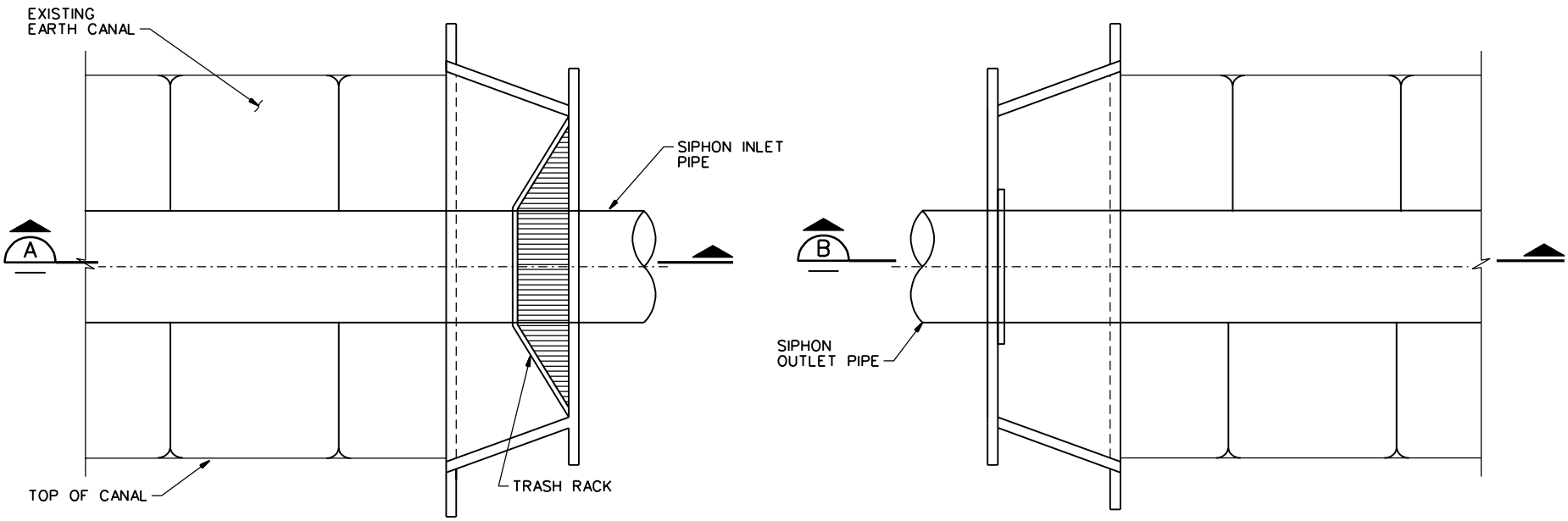

INLET PLAN
NTS

OUTLET PLAN
NTS

ATTACHMENT 8
TYPICAL SIPHON
(8 FT PIPE AND LARGER)
PHASE 2 DESIGN
ACID MAIN CANAL MODERNIZATION

pcfig11.dlv 10-JAN-2005 15:09:46

Attachment 9
Typical Siphon (8ft Pipe and Larger)

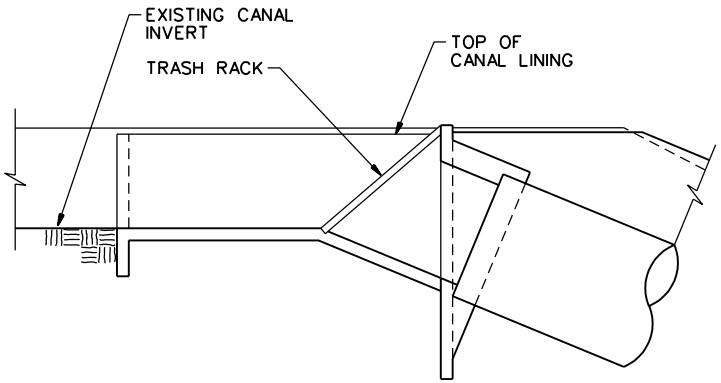

INLET

SECTION A
NTS

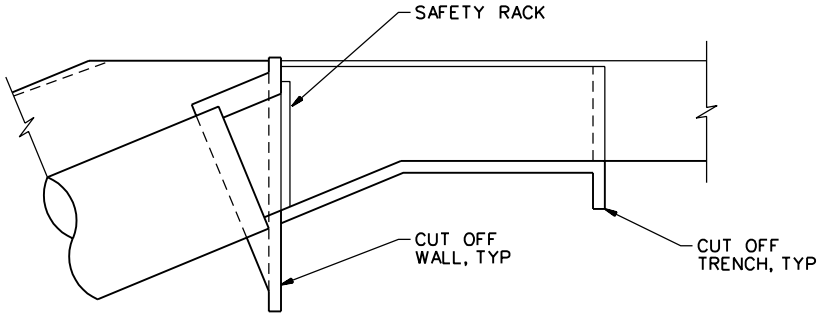

OUTLET

SECTION B
NTS

ATTACHMENT 9
TYPICAL SIPHON
(8 FT PIPE AND LARGER)
PHASE 2 DESIGN
ACID MAIN CANAL MODERNIZATION

Attachment 10
Typical Siphon (7ft Pipe and Smaller)

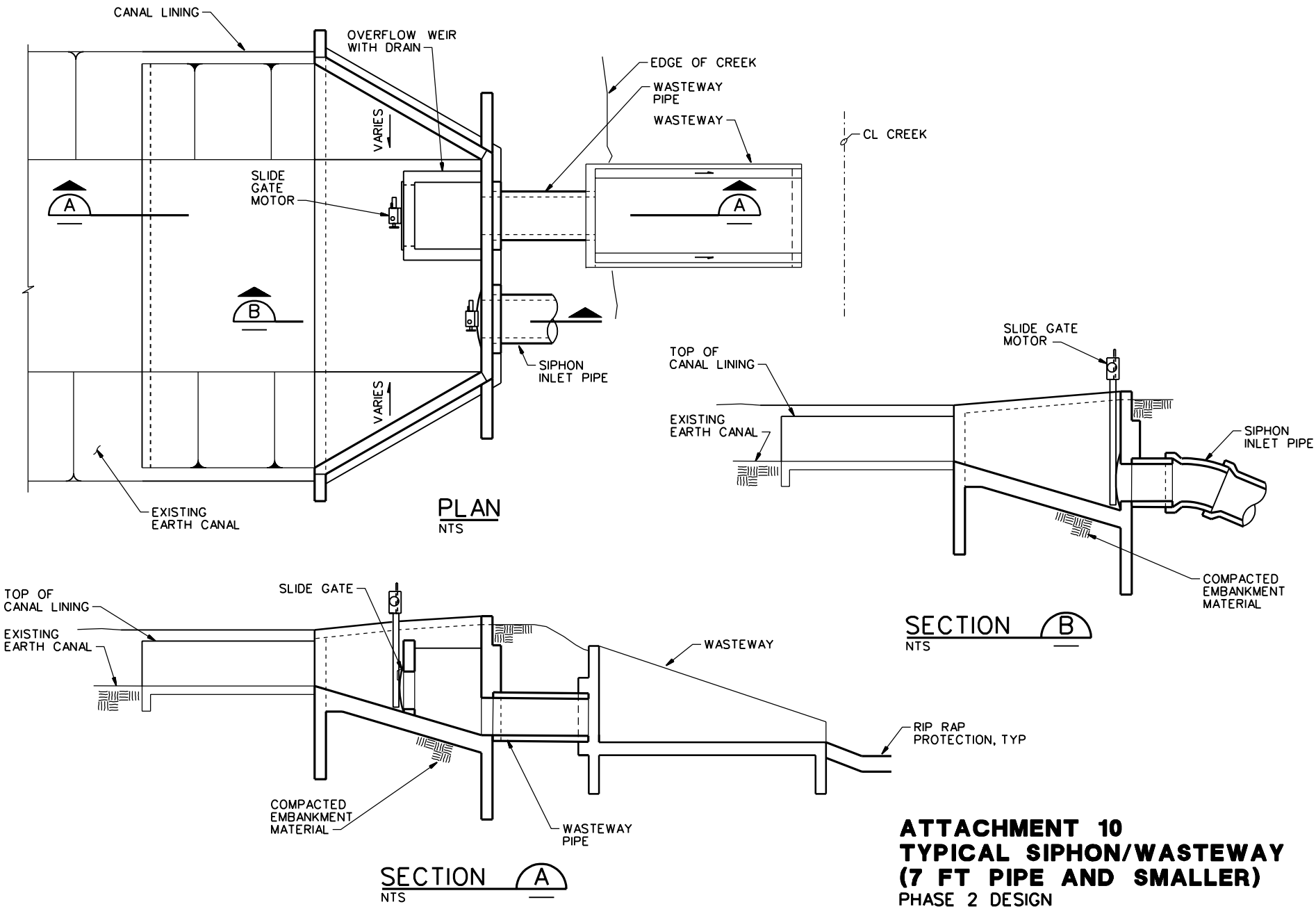

ATTACHMENT 10
TYPICAL SIPHON/WASTEWAY
(7 FT PIPE AND SMALLER)
PHASE 2 DESIGN
ACID MAIN CANAL MODERNIZATION

pcfig6.dlv 10-JAN-2005 15:15:28

Attachment 11
Typical Siphon (7ft Pipe and Smaller)

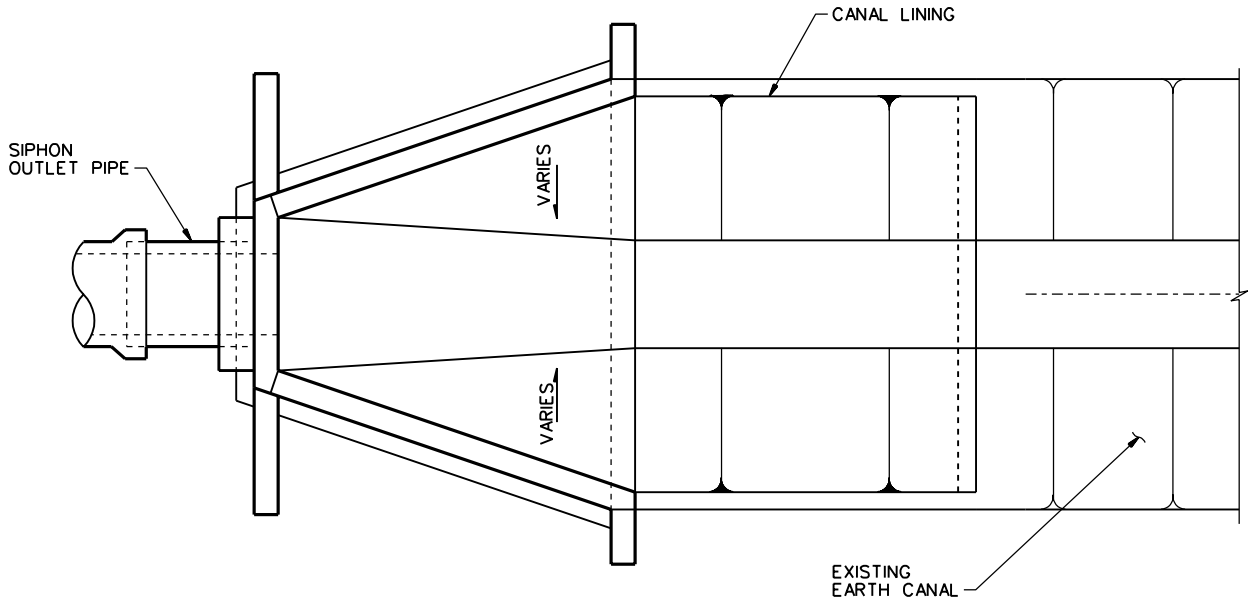

PLAN
NTS

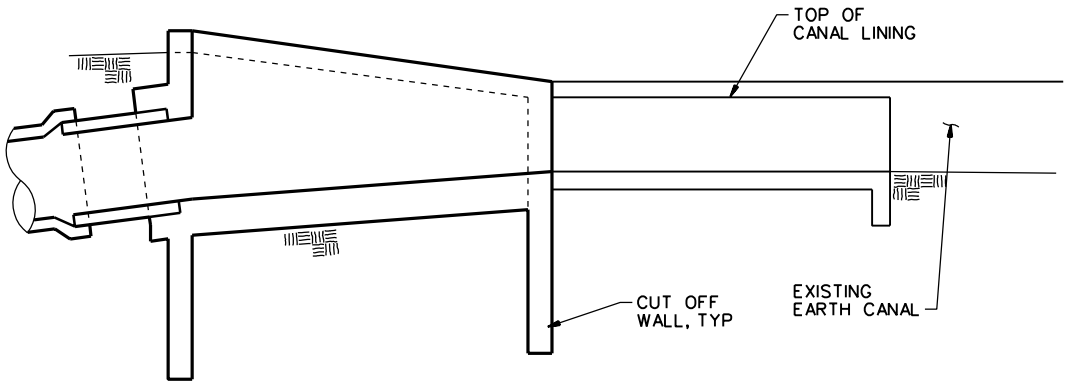

SECTION A
NTS

ATTACHMENT 11
TYPICAL SIPHON OUTLET
(7 FT PIPE AND SMALLER)
PHASE 2 DESIGN
ACID MAIN CANAL MODERNIZATION

Attachment 12
Reinforced Concrete Lining

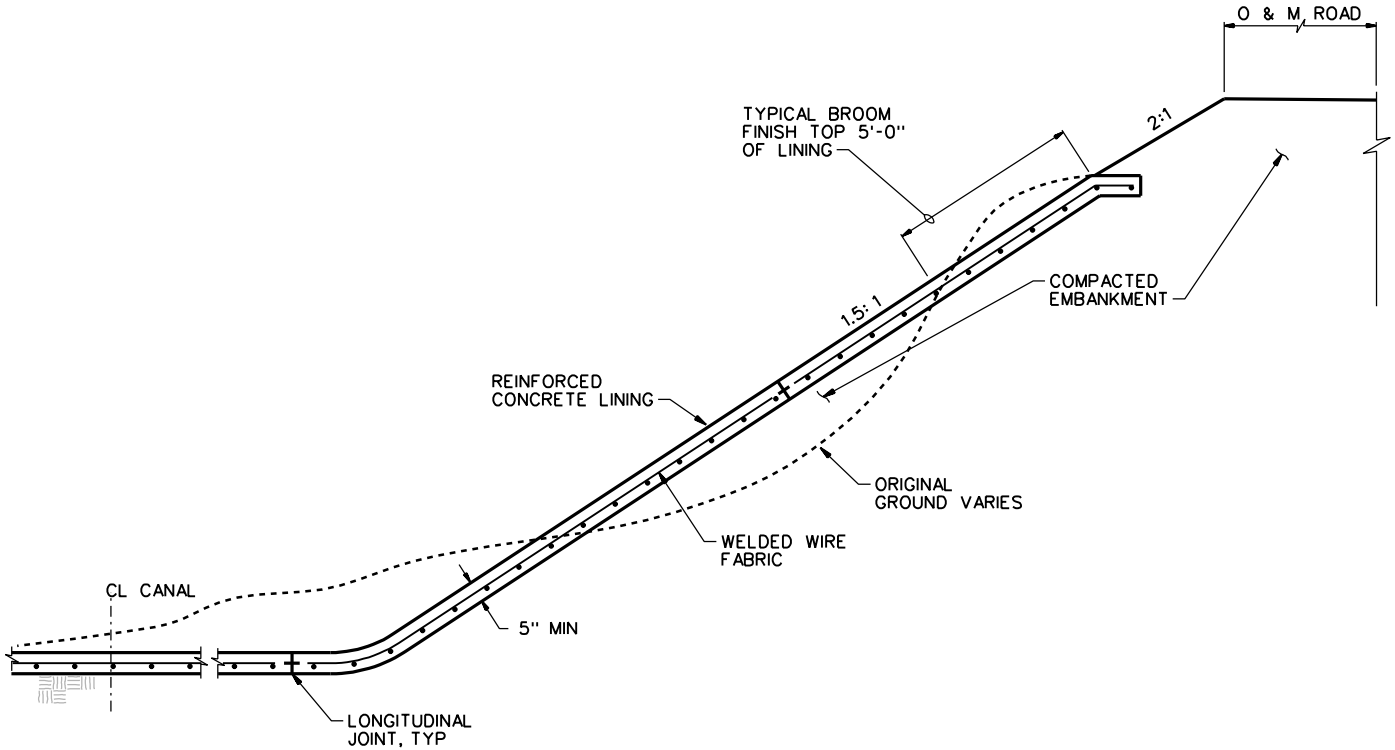

TYPICAL SECTION
NTS

ATTACHMENT 12
REINFORCED CONCRETE LINING
PHASE 2 DESIGN
ACID MAIN CANAL MODERNIZATION

pcfig8.dlv 10-JAN-2005 15:21:54

Attachment 13
Reinforced Concrete Lining

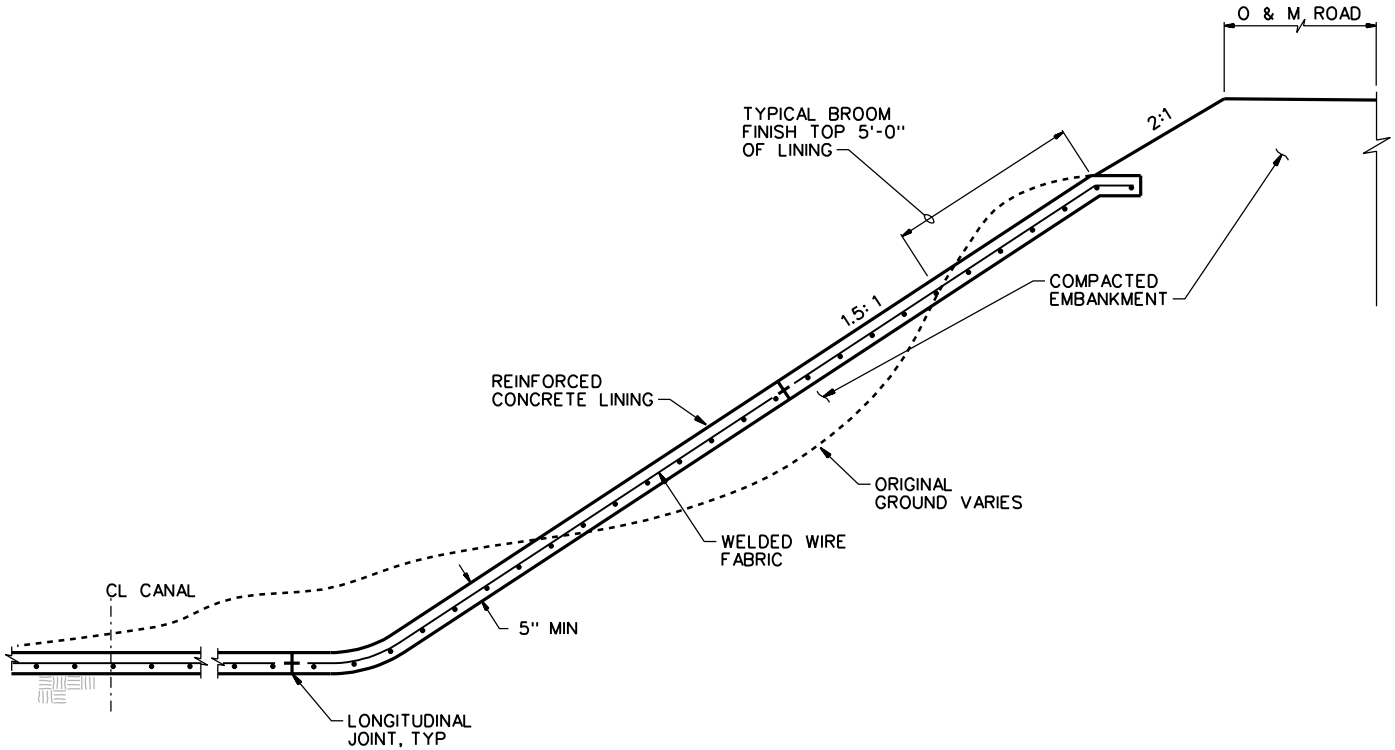

TYPICAL SECTION

NTS

ATTACHMENT 13
REINFORCED CONCRETE LINING
PHASE 2 DESIGN
ACID MAIN CANAL MODERNIZATION

Attachment 14
Work Schedule

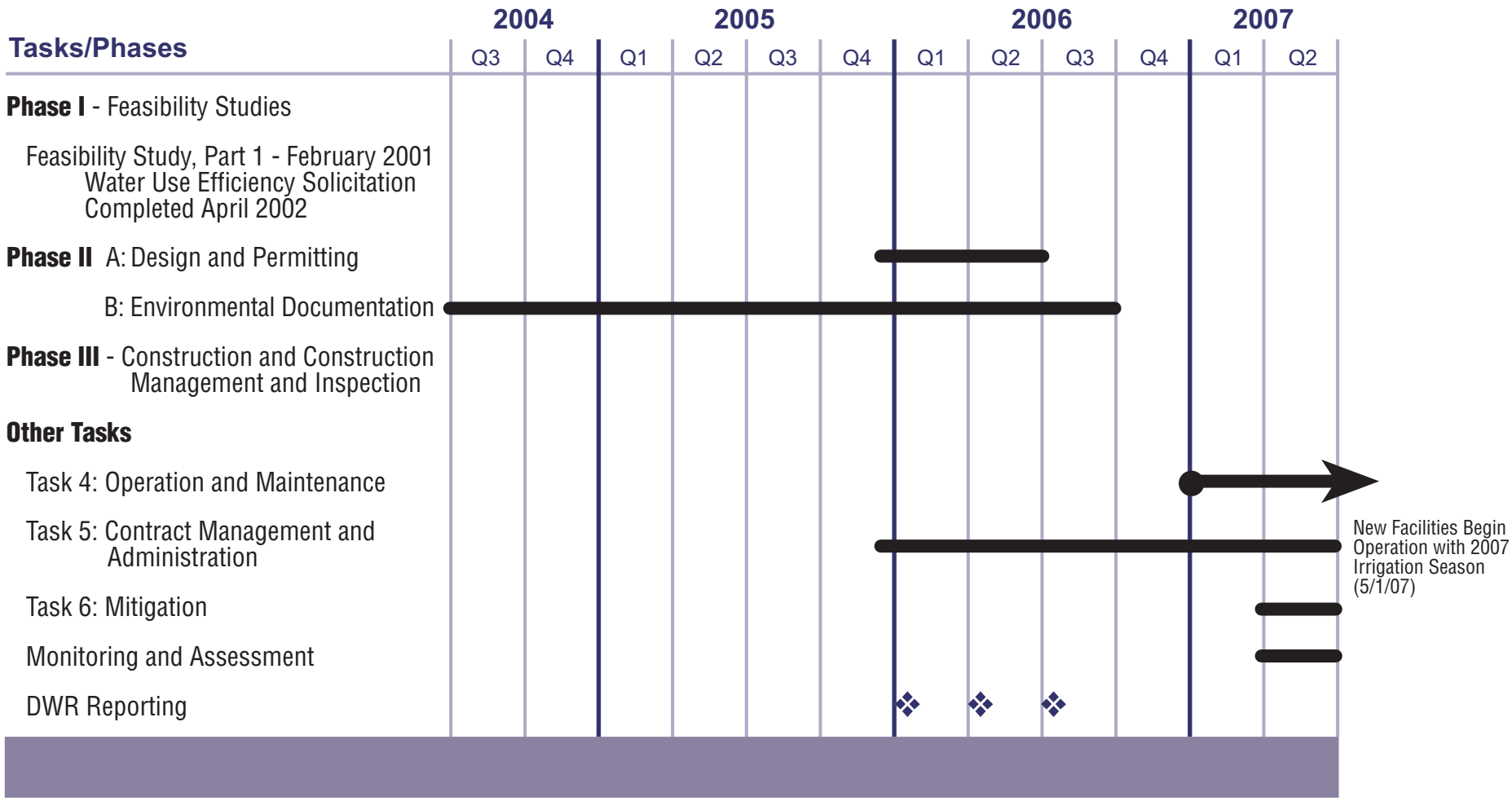

ATTACHMENT 14
WORK SCHEDULE
PHASE 2 DESIGN -
ACID MAIN CANAL MODERNIZATION

W012005004RDD_04 (1/11/05)

Attachment 15
Resume

Mr. Dee E. Swearingen

PO Box 786 530-365- 7329
Anderson, CA, 96007 Fax 530-365- 7623
Acid@shasta.com

Objective

Project Manager

Experience

Served as General Manager, Secretary , Treasurer and for Water and Irrigation Districts in both Oregon and California. Executive Director for Joint Powers Authorities and as Senior Water Resource Consultant for a consulting Engineering firm. Has been involved in the formation of, Water Districts, Joint Power Authorities MOU and MOA working groups. Served on Strategic Water Committees in Oregon and California appointed by the Governors and Directors of Water Resources. Served on the Association of California Agencies Executive committee, Vision 2000, and Board of Directors. Over 31 years experience working with water resources in Oregon and California.

Project Manager for more than 10 successful grants including CALFED, totaling over $ 12 million dollars. Providing Administrative assistance and Management of grant applications and administration, planning, design, and construction activities.

Administered capital improvement projects with annual expenditures of up to $5 million per year.

Managed the Operation and Maintenance of water system facilities including canals, pipelines, pump stations, flow control structures, fish screens and fish ladders.

Specialty

Water resource management, conservation, conjunctive use water banking, incentive pricing, water transfers and marketing, Planning long range fish and waterfowl joint habitat program with irrigation projects for win solutions.

Employers

Talent Irrigation District, Talent Oregon; Grant Pass Irrigation District, Grants Pass Oregon; Western Canal Water District, Richvale California; San Joaquin River Exchange Contractors Water Authority, Los Banos California; HY A Consulting Engineers, Sacramento California; Anderson Cottonwood Irrigation District, Anderson California.

Attachment 16
Tables

Attachment 16---Cost Tables

APPLICANT: ANDERSON-COTTONWOOD ID

Table C-1: Project Costs (Budget) in Dollars)

	Category	Project Costs	Contingency % (ex. 5 or 10)	Project Cost + Contingency	Applicant Share	State Share Grant	Life of investment (years)	Capital Recovery Factor	Annualized Costs
	(I)	$ (II)	(III)	$ (IV)	$ (V)	$ (VI)	(VII	(VIII)	$ (IX)
	Administration[1]								
	Salaries, wages	$0	0	$0	$0	$0	0	0.0000	$0
	Fringe benefits	$0	0	$0	$0	$0	0	0.0000	$0
	Supplies	$0	0	$0	$0	$0	0	0.0000	$0
	Equipment	$0	0	$0	$0	$0	0	0.0000	$0
	Consulting services	$170,000	0	$170,000	$0	$170,000	0	0.0000	$0
	Travel	$2,800	0	$2,800	$2,800	$0	0	0.0000	$0
	Other	$27,500	0	$27,500	$0	$27,500	0	0.0000	$0
(a)	Total Administration Costs	$200,300		$200,300	$2,800	$197,500			$0
(b)	Planning/Design/Engineering	$775,266	0	$775,266	$0	$775,266	0	0.0000	$0
(c)	Equipment Purchases/Rentals/ Rebates/Vouchers	$0	0	$0	$0	$0	10	0.0000	$0
(d)	Materials/Installation/Implementation	$0	0	$0	$0	$0	0	0.0000	$0
(e)	Implementation Verification	$0	0	$0	$0	$0	0	0.0000	$0
(f)	Project Legal/License Fees	$0	0	$0	$0	$0	0	0.0000	$0
(g)	Structures	$0	0	$0	$0	$0	0	0.0000	$0
(h)	Land Purchase/Easement	$0	0	$0	$0	$0	0	0.0000	$0
(i)	Environmental Compliance/Mitigation/ Enhancement	$0	0	$0	$0	$0	0	0.0000	$0
(j)	Construction	$10,149,524	0	$10,149,524	$0	$10,149,524	30	0.0726	$736,855
(k)	Other (Specify)	$0	0	$0	$0	$0	0	0.0000	$0
(l)	Monitoring and Assessment	$0	0	$0	$0	$0	0	0.0000	$0
(m)	Report Preparation	$0	5	$0	$0	$0	0	0.0000	$0
(n)	**TOTAL**	$11,125,090		$11,125,090	$2,800	$11,122,290			$736,855
(o)	Cost Share -Percentage				0	100			

1- excludes administration O&M.

Applicant: ANDERSON-COTTONWOOD ID

THE TABLES ARE FORMATTED WITH FORMULAS: FILL IN THE SHADED AREAS ONLY

Table C-2: Annual Operations and Maintenance Costs

Operations (1) (I)	Maintenance (II)	Other (III)	Total (IV) (I + II + II)
$50,747	$50,747	$0	$101,494

(1) Include annual O & M administration costs here.

Table C-3: Total Annual Project Costs

Annual Project Costs (1) (I)	Annual O&M Costs (2) (II)	Total Annual Project Costs (III) (I + II)
$736,855	$101,494	$838,349

(1) From Table C-1, row (n) column (IX)
(2) From Table C-2, column (IV)

Table C-4: Capital Recovery Factor
(for a discount rate of 6%)

Life of Project (in years)	Capital Recovery Factor	Life of Project (in years)	Capital Recovery Factor
1	1.0600	26	0.0769
2	0.5454	27	0.0757
3	0.3741	28	0.0746
4	0.2886	29	0.0736
5	0.2374	30	0.0726
6	0.2034	31	0.0718
7	0.1791	32	0.0710
8	0.1610	33	0.0703
9	0.1470	34	0.0696
10	0.1359	35	0.0690
11	0.1268	36	0.0684
12	0.1193	37	0.0679
13	0.1130	38	0.0674
14	0.1076	39	0.0669
15	0.1030	40	0.0665
16	0.0990	41	0.0661
17	0.0954	42	0.0657
18	0.0924	43	0.0653
19	0.0896	44	0.0650
20	0.0872	45	0.0647
21	0.0850	46	0.0644
22	0.0830	47	0.0641
23	0.0813	48	0.0639
24	0.0797	49	0.0637
25	0.0782	50	0.0634

Applicant: **Anderson-Cottonwood ID**

THE TABLES ARE FORMATTED WITH FORMULAS: FILL IN THE SHADED AREAS ONLY

Table C-5 Project Annual Physical Benefits (Quantitative and Qualitative Description of Benefits)

	Qualitative Description - Required of all applicants[1]				**Quantitative Benefits - where data are available [2]**
	Description of physical benefits (in-stream flow and timing, water quantity and water quality) for:	Time pattern and Location of Benefit	Project Life: Duration of Benefits	State Why Project Bay Delta benefit is Direct[3] Indirect [4] or Both	Quantified Benefits (in-stream flow and timing, water quantity and water quality)
Bay Delta	Greater system flexibility through automation and measurement resulting in potential benefits for in-stream flow and timing, water quantity, and water quality	Over the irrigation season; since ACID is at the head of the Sacramento River system, just downstream of Shasta Dam, the majority of the Mainstem of the River and the Delta would benefit from improved ACID system water management.	Assume a project life of at least 30 years, 10 years of which through the Bay-Delta SVMWP	Both--Conserved water could reduce diversion requirements off of the Sacramento River potentially affecting a rise in in-stream flows	Potentially up to 19,000 ac-ft of water savings as estimated by the Phase 1 Feasibility Study
Local	Redding Basin has demonstrated need for better management and increased water supply to meet future demands. Canal automation and measure will help meet these needs through potential benefits of increased system flexibility	Over the irrigation season; since ACID is at the head of the Sacramento River system, just downstream of Shasta Dam, the majority of the Mainstem of the River and the Delta would benefit from improved ACID system water management.	Assume a project life of at least 30 years, 10 years of which through the Bay-Delta SVMWP	**Not applicable.**	Potentially up to 19,000 ac-ft of water savings as estimated by the Phase 1 Feasibility Study

[1] The qualitative benefits should be provided in a narrative description. Use additional sheet.

[2] Direct benefits are project outcomes that contribute to a CALFED objective within the Bay-Delta system during the life of the project.

[3] Indirect benefits are project outcomes that help to reduce dependency on the Bay-Delta system. Indirect benefits may be realized over time.

[4] The project benefits that can be quantified (i.e. volume of water saved or mass of constituents reduced) should be provided.

Applicant: Anderson-Cottonwood ID

THE TABLES ARE FORMATTED WITH FORMULAS: FILL IN THE SHADED AREAS ONLY

Table C-6 Project Annual Local Monetary Benefits

ANNUAL LOCAL BENEFITS	ANNUAL QUANTITY	UNIT OF MEASUREMENT	ANNUAL MONETARY BENEFITS
(a) Avoided Water Supply Costs (Current or Future Source)	$25,000		$25,000
(b) Avoided Energy Costs	0		$0
(c) Avoided Waste Water Treatment Costs	0		$0
(d) Avoided Labor Costs	0		$0
(e) Other (describe)	0		$0
(f) Total [(a) + (b) + (c) + (d) + (e)]			$25,000

Table C-7 Project Local Monetary Benefits and Project Costs

(a) Total Annual Monetary Benefits [(Table C-6, row (f)]		$25,000
(b) Total Annual Project Costs (Table C-3, column III)		$838,349

Table C-8 Applicant's Cost Share and Description

Applicant's cost share %: (from Table C-1, row o, column V)	**0**
Describe how the cost share (based on relative balance between Bay-Delta and Local Benefits) is derived. (See Section A-7 for description.)	
Provide Description in a narrative form.	