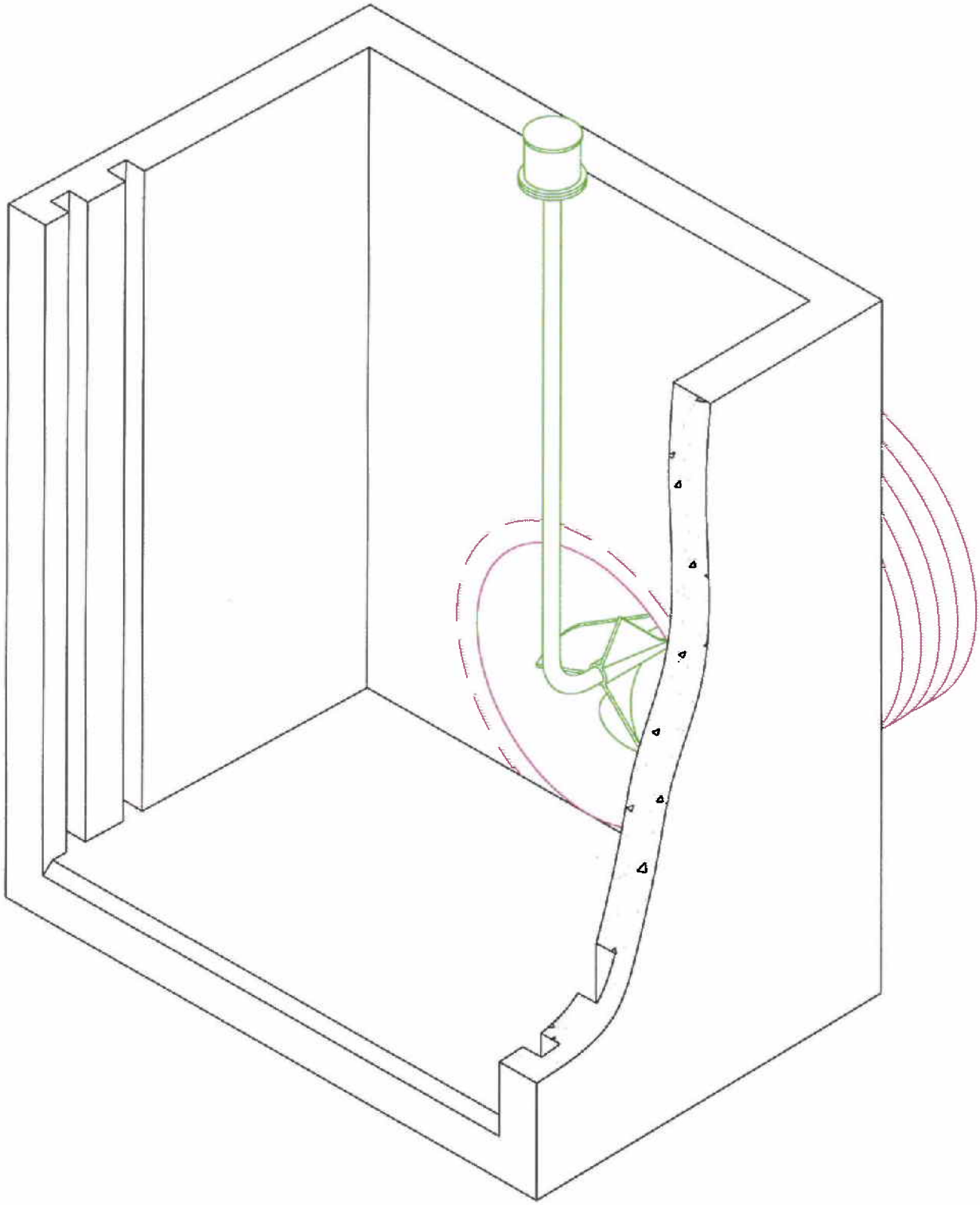

TYPICAL FLOW METER

TYPICAL FLOW METER